AGENDA
SHAWNEE MUNICIPAL AUTHORITY
August 1, 2022 AT 6:00 P.M.
COMMISSION CHAMBERS AT CITY HALL
16 WEST 9TH STREET
SHAWNEE, OKLAHOMA

Official action can only be taken on items which appear on the agenda. The public body may adopt, approve, ratify, deny, defer, recommend, amend, strike, or continue any agenda item. When more information is needed to act on an item, the public body may refer the matter to Staff or back to Committee or the recommending body. Under certain circumstances, items are deferred to a future date or stricken from the agenda entirely.

CALL TO ORDER

DECLARATION OF A QUORUM

1. Consider approval of Consent Agenda:

   a. Minutes from the July 18, 2022 regular meeting.

2. Consideration of a budget amendment for Fiscal Year 2022-2023 for Fund 501 Shawnee Municipal Authority to appropriate public safety fee revenue to be transferred to the General Fund for additional public safety costs.

3. Consider Bids:

   a. Wastewater System Improvements (Open)

4. New Business

   (Any matter not known or which could not have been reasonably foreseen prior to the posting of the agenda)

5. Adjournment

Respectfully submitted,

Lisa Lasyone, CMC, City Clerk

The City of Shawnee encourages participation from its citizens in public meetings. If participation is not possible due to a disability, notify the City Clerk, in writing, at least forty-eight hours prior to the scheduled meeting and necessary accommodations will be made. (ADA 28 CFR/36)

Shawnee Municipal Authority 1. a.

Meeting Date: 08/01/2022

Minutes

Submitted By: Kacie Eck, City Clerk

Department: City Clerk

Information

Title of Item for Agenda

Minutes from the July 18, 2022 regular meeting.

Fiscal Impact

Attachments

Minutes

THE TRUSTEES OF THE SHAWNEE MUNICIPAL AUTHORITY OF THE CITY OF SHAWNEE, COUNTY OF POTTAWATOMIE, STATE OF OKLAHOMA, MET IN REGULAR SCHEDULED SESSION, MONDAY, JULY 18, 2022, DURING THE BOARD OF CITY COMMISSIONER MEETING AT 6:00 P.M., PURSUANT TO NOTICE DULY POSTED AS PRESCRIBED BY LAW AT 4:00 P.M. ON JULY 14, 2022. UPON ROLL CALL, A QUORUM WAS DECLARED WITH THE FOLLOWING MEMBERS IN ATTENDANCE:

PRESENT: Matthews, Engles, Flood, Bolt, Rutherford, Sehorn, Salter
ABSENT: None

Call to Order
Declaration of a Quorum

AGENDA ITEM NO. 1: Consider approval of Consent Agenda:

a. Minutes from the July 5, 2022 regular meeting.

A motion was made by Trustee Matthews, seconded by Trustee Flood, to approve Consent Agenda Item No. 1(a). Motion carried 7-0.

AYE: Matthews, Flood, Bolt, Rutherford, Sehorn, Salter, Engles
NAY: None

AGENDA ITEM NO. 2: Consideration of a budget amendment for Fiscal Year 2022-2023 Fund 501 Shawnee Municipal Authority Fund to appropriate fund balance for Shawnee Municipal Authority Fund for encumbrances in Fiscal Year 2021-2022 which goods and services were not received in Fiscal Year 2021-2022 but will be received in Fiscal Year 2022-2023. Also, for additional transfers to General Fund due to Fiscal Year 2021-2022 reduced actual transfers for issues of timing.

Mr. Jacob Foos, Assistant City Manager, provided a staff report.

A motion was made by Trustee Flood, seconded by Trustee Engles, to approve the budget amendment for Fiscal Year 2022 – 2023 Fund 501 Shawnee Municipal Authority Fund. Motion carried 7-0.

AYE: Flood, Engles, Bolt, Rutherford, Sehorn, Salter, Matthews
NAY: None

AGENDA ITEM NO. 3: New Business (Any matter not known, or which could not have been reasonably foreseen prior to the posting of the agenda)

DRAFT

There was no New Business.

AGENDA ITEM NO. 4: Adjournment

There being no further business to be considered, the meeting was adjourned by power of the Chair. (7:15 p.m.)

_____
ED BOLT, CHAIRMAN

ATTEST:

_____
LISA LASYONE, CMC, CITY CLERK

DRAFT

Shawnee Municipal Authority 2.

Meeting Date: 08/01/2022

Budget Amendment

Submitted By: Kacie Eck, City Clerk

Department: City Clerk

Information

Title of Item for Agenda

Consideration of a budget amendment for Fiscal Year 2022-2023 for Fund 501 Shawnee Municipal Authority to appropriate public safety fee revenue to be transferred to the General Fund for additional public safety costs.

Fiscal Impact

Attachments

Budget Amendment

Finance

16 W. 9th St.
Shawnee, OK 74801
ShawneeOK.org

Date: July 28, 2022

To: Shawnee Municipal Authority

From: Jacob Bussell, Assistant Finance Director

Subject: Consideration of budget amendments to appropriate public safety fee revenue to be transferred to the General Fund.

Background: On the June 20, 2022, Board of Commissioners Meeting, the Commission approved ordinances and resolutions to establish a Public Safety Fee. The Public Safety Fee is a monthly charge of $1.65 per utility account. The Public Safety Fee becomes effective August 1, 2022, with payments beginning to be received by September 1, 2022. The funds collected from this fee will allow for the hiring of three additional firefighters, to bring the Fire Suppression Division to a total of 51 firefighters and will provide funding for the equipment and gear necessary for the added firefighters. Staff is requesting that the revenue from the Public Safety Fee be appropriated for the costs of the three additional firefighters for the fiscal year 2022-2023 budget. The amounts to be appropriated are as follows:

- $193,050 – Public Safety Fee revenue to be transferred from SMA to the General Fund to cover the cost of three additional firefighters.

Financial Impact: See Budget Amendment Attached

Attachment: Amendment.

Staff Recommendation: Approval of the item.

City of Shawnee
2022-2023 Budget Amendment
Shawnee Municipal Authority

Estimated Revenue, Fund Balance, or Transfers IN

Fund Number	Account Number	Project Code	Line Item	Description	Balance Before Amendment	Amount of Amendment Increase (Decrease)	Balance After Amendment
501	45250			PUBLIC SAFETY FEE	-	193,050.00	193,050.00
				Total	-	193,050.00	193,050.00

Appropriations

Fund Number	Account Number	Project Code	Line Item	Description	Balance Before Amendment	Amount of Amendment Increase (Decrease)	Balance After Amendment
501	5-5030-56010			TRANSFER TO GENERAL FUND	6,360,000.00	193,050.00	6,553,050.00
					6,360,000.00	193,050.00	6,553,050.00

Approved by the City Commission this

Explanation of Budget Amendment:
To appropriate public safety fee revenue to be transferred to the General Fund for additional public safety costs.

Approved:

Mayor _____
Attest:

Posted By _____ Date _____ BA# _____ Pkt.# _____

City Clerk _____

Shawnee Municipal Authority 3. a.

Meeting Date: 08/01/2022

Bid Open

Submitted By: Kacie Eck, City Clerk

Department: City Clerk

Information

Title of Item for Agenda

Wastewater System Improvements (Open)

Fiscal Impact

Attachments

Notice to Bidders

Bid Documents

Addendum Nos. 1 - 4

Plan Holders List

ADVERTISEMENT FOR BIDS

SHAWNEE WASTEWATER SYSTEM IMPROVEMENTS

Shawnee Municipal Authority (Owner) is requesting Bids for the construction of the following Project:

Wastewater System Improvements

Bids for the construction of the Project will be received at the **City of Shawnee** located at **Office of the City Clerk, City of Shawnee, 16 West 9th Street, Shawnee, OK 74801-6812** until **August 1st, 2022 at 4:00pm** local time. Bids received will be publicly opened and read along at the Owner's public meeting on August 1st at 6:30pm local time. Bids received more than ninety-six (96) hours prior to the Bid Opening will be returned. All bids received at said time will be opened and evaluated for completeness and correctness. All work shall be performed and all construction and materials used and furnished shall be in accordance with the Contract Documents prepared by Wall Engineering, LLC.

Only contactors previously selected as prequalified by the City of Shawnee will be allowed to bid this project.

The contract is to be awarded to the lowest, responsive, responsible bidder. The Owner reserves the right to correct any non-material clerical errors in the bidding as allowed under Oklahoma Law. The Owner reserves the right to reject any and all bids in accordance with the Oklahoma Public Competitive Bidding Act of 1974. Conditional bids shall not be accepted.

The Project includes the following Work:

> **New 4.5 MGD SBR Wastewater Treatment Plant & Related Equipment/Units, New Southside Wastewater Lift Station & Screening System, 24" HDPE Forcemain between New WWTP and New Lift Station, & 30" HDPE Discharge Forcemain to Discharge Location.**

Funding for this project is provided through the Oklahoma Water Resources Board's Clean Water State Revolving Fund (CWSRF) program. As such, compliance with the Davis Bacon Act, American Iron and Steel, and Labor Standards Contract Provisions is mandatory.

Each bidder shall accompany his original bid, filed with the Shawnee Municipal Authority, with a certified or Cashier's Check on a solvent bank located in Oklahoma, or a Bidder's Bond, in the amount of five (5) percent of the amount bid, as a guarantee of his ability to perform the contract bid upon, and that he will enter into a written contract with the Owner to perform said work and/or furnish said materials in accordance with said Plans and Specifications, and furnish the required bonds according to the Public Competitive Bidding Act of 1974.

The Owner will retain the deposit for liquidated damages in case the successful bidder fails to enter in said contract and furnish the required bonds provided for in the specifications within the time required. Deposit of the unsuccessful bidders will be returned upon the execution of the Contract and required bonds.

Each bidder shall accompany his bid with a sworn statement in writing that the bidder has not directly or indirectly entered into an agreement, expressed or implied, with any other bidder concerning the price or amount of such bid or any bids, the limiting of the bids or bidders, the paying to anyone any money for promotion expenses, the parceling or farming out to any bidder or bidders or other persons of any part of the contract or any part of the subject matter of the bid or of the profits thereof.

Construction, Maintenance and Statutory Payment Bonds in the amount of 100% of the contract price are required for this project. These bonds must be obtained from a Corporate Surety licensed in Oklahoma,

and approved by the Owner and Consulting Engineer. The bidder shall state in the proposal the name and address of the Surety or Sureties who will sign this bond in case the contract is awarded. The Maintenance Bond required will guarantee the repair of all damage due to improper materials or workmanship for a period of one (1) year after the acceptance of the work by the Owner.

This project is to be financed by a CWSRF loan from the Oklahoma Water Resources Board (OWRB) and shall be referred to as Project No. ORF20-0018-CW. The following requirements and regulations must be complied with:

Equal Opportunity in Employment: All qualified applicants will receive consideration for employment without regard to race, color, religion, sex, national origin, age or physical handicap. Bidders on this work will be required to comply with the President's Executive Order No. 11246, as amended.

Each bidder must fully comply with the requirements, terms and conditions of the Environmental Protection Agency's Disadvantaged Business Enterprise Requirements including employing the six (6) good faith efforts and soliciting disadvantaged business enterprises during the performance of this contract. The bidder commits itself to following the good faith efforts to solicit disadvantaged business enterprises contained herein and all other requirements, terms and conditions of these bid conditions by submitting a properly signed bid. Requirements are contained in OWRB's Guidance and Procedures, ORF-267.

Davis Bacon Act wage rules shall apply. All laborers and mechanics employed by contractors and sub-contractors on projects funded directly by or assisted in whole or in part by and through the Federal Government shall be paid wages at rates not less than those prevailing on projects of a character similar in the locality as determined by the Secretary of Labor in accordance with subchapter IV of Chapter 31 of Title 40, United States Code and 29 CFR parts 1,3, and 5. The Department of Labor provides all pertinent information related to compliance with labor standards, including prevailing wage rates and instructions for reporting. For more information please refer to Oklahoma Water Resources Board Supplemental Conditions, ORF-185 as well as http://www.beta.sam.gov/."

American Iron and Steel provisions also apply to projects funded directly by or assisted in whole or in part by and through the Federal Government pursuant to P.L. 113-76, Consolidated Appropriations Act, 2014, Sec. 436 requires that "None of the funds made available by a State water pollution control revolving fund as authorized by title VI of the Federal Water Pollution Control Act (33 U.S.C. 1381 et seq.) or made available by a drinking water treatment revolving loan fund as authorized by section 1452 of the Safe Drinking Water Act (42 U.S.C. 300j-12) shall be used for a project for the construction, alteration, maintenance, or repair of a public water system or treatment works unless all of the iron and steel products used in the project are produced in the United States." For more information, please refer to Oklahoma Water Resources Board Supplemental Conditions ORF-185.

System for Award Management (SAM) registration is required for all SRF programs (CWSRF and DWSRF) applicants and Awardees (Entities, Prime Contractors, Subcontractors, Vendors) in order to be awarded contracts by the SRF Programs. SAM replaces Central Contractor Registration/Federal Agency Registration, Online Representations and Certifications Application, and Excluded Parties List System. Applicants and awardees are required to complete a one-time free registration to provide basic information relevant to procurement and financial transactions. Registrants must retain an active status to be eligible for SRF projects. New Applicants and Awardees can go to SAM.gov to complete the registration process.

Note: In order to register in SAM, a Data Universal Number System (DUNS) number will be required. DUNS number is a unique, non-indicative 9-digit identifier issued and maintained by Dun & Bradstreet (D&B) that verifies the existence of a business entity globally. D&B assigns DUNS numbers for each physical

location of a business. All entities doing business with the U.S Government can receive a DUNS number FREE of charge and, under normal circumstances, within 1-2 business days when using D&B web form process at http://fedgov.dnb.com/webform.

Information and Bidding Documents for the Project can be found at the following Designated Bidding Website:

www.civcastusa.com

Bidding Documents may be downloaded from the Designated Bidding Website. Prospective Bidders are required to register with the Designated Bidding Website as a plan holder, even if Bidding Documents are obtained from a plan room or source other than the Designated Website in either electronic or paper format. The Designated Bidding Website will be updated periodically with addenda, lists of registered plan holders, reports, and other information relevant to submitting a Bid for the Project. All official notifications, addenda, and other Bidding Documents will be offered only through the Designated Bidding Website. Neither Owner nor Engineer will be responsible for Bidding Documents, including addenda, if any, obtained from sources other than the Designated Bidding Website.

Printed copies of the Bidding Documents may be obtained from the Designated Bidding Website for an additional fee. See Designated Bidding Website for information.

A **mandatory pre-bid conference** for the Project will be held on **July 14th, 2022 at 10:00am at Shawnee City Hall, 16 West 9th Street, Shawnee, OK.** Bids will not be accepted from Bidders that do not attend the mandatory pre-bid conference.

For all further requirements regarding bid submittal, qualifications, procedures, and contract award, refer to the Instructions to Bidders that are included in the Bidding Documents.

Bids must remain in effect for 60 days after the bid opening date. Within 60 days from the bid date, the Owner may award the contract to the lowest responsive, responsible bidder or reject any or all bids for the project.

The Owner reserves the right to reject any or all bids, to waive irregularities in the bids and bidding deemed to be in the best interests of the Owner, and to reject nonconforming, nonresponsive, or conditional bids. In case of ambiguity or lack of clearness in stating the price in the bids, the Owner reserves the right to consider the most advantageous construction thereof, or to reject the bid. Unreasonable or unbalanced unit prices will be considered sufficient cause of rejection of any bid or bids.

This Advertisement is issued by:

Owner: **Shawnee Municipal Authority**
Date: **6/28/22**

SHAWNEE MUNICIPAL AUTHORITY

WASTEWATER SYSTEM IMPROVEMENTS

CONTRACT DOCUMENTS & SPECIFICATIONS
VOLUME 1 OF 8
DIVISION 00

IN COOPERATION WITH

OKLAHOMA WATER RESOURCES BOARD

OWRB PROJECT # ORF-20-0018-CWA

ISSUED FOR BIDDING

City of Shawnee
OKLAHOMA

WALL ENGINEERING

Wall Engineering Project # SHN-20-01
WE Firm Certificate of Authorization #5413

SHAWNEE MUNICIPAL AUTHORITY
WASTEWATER SYSTEM IMPROVEMENTS

ISSUED: FOR CONSTRUCTION

June 2022

The seal below covers the following sections of the Contract Documents:

Division 0, Division 1, Division 2, Division 3, Division 5, Division 9, Division 10, Division 13, Division 31, Division 32, Division 33, Division 40, Division 41, Division 43, Division 46, Division 47



CONTRACT DOCUMENTS
TABLE OF CONTENTS

VOLUME 1 OF 8

DIVISION 00 – PROCUREMENT AND CONTRACTING DOCUMENTS

00_01_01.01	Project Title Page
00_01_07.01	Seals Page, Civil
00_01_07.02	Seals Page, Electrical
00_01_07.03	Seals Page, Mechanical
00_01_10	Table of Contents
00_01_19	Prequalified Contractors
00_01_21	Requirements for Bidders

PROCUREMENT REQUIREMENTS

00_11_13	Advertisement for Bids
00_21_13	Instruction to Bidders
00_41_13	Bid Form
00_41_13	Bid Form - Attachment "A" - Bid Summary Sheet
00_41_16	List of Manufacturers
00_41_19	List of Subcontractors
00_41_16	List of Manufacturers
00_41_19	List of Subcontractors
00_41_22	Special Materials Cost Increases
00_43_13	Bid Security Form
00_45_19.13	Noncollusion Affidavit
00_45_21	Business Relationship Affidavit
00_45_17.13	Payroll Affidavit

OWRB CWSRF SPECIAL PROCUREMENT & PROJECT REQUIREMENTS

00_46_47.39	Certification of Labor Standards
00_46_47.19	DBE Guidance
00_46_47.23	DBE Subcontractor Participation Form
00_46_47.26	DBE Subcontractor Performance Form
00_46_47.29	DBE Subcontractor Utilization Form
00_46_47.33	American Iron & Steel Certification
00_46_47.36	Bidder Statements
00_46_47.39	Wage Rates – Building
00_46_47.41	Wage Rates – Heavy

CONTRACTING REQUIREMENTS

00_51_00	Notice of Award
00_52_13	Agreement - Stipulated Price
00_55_00	Notice to Proceed

PROJECT FORMS

00_61_13.13	Performance Bond Form
00_61_13.16	Payment Bond Form
00_61_20	Maintenance Bond Form
00_62_16	Certificate of Insurance
00_62_76	Application for Payment Form
00_62_76.13	Invoice Affidavit Form

CONTRACT DOCUMENTS
TABLE OF CONTENTS

00_63_13 Request for Information
00_63_36 Field Order Form
00_63_49 Work Change Directive Form
00_63_63 Change Order Form
00_63_67 Attorney Certificate of Approval
00_65_16 Substantial Completion Form
00_65_19.24 Acceptability of Work Form
00_65_19.29 Release of Claimants Form
00_65_19.32 Property Owner Release Form

CONDITIONS OF THE CONTRACT
00_72_13 General Conditions - Stipulated Sum
00_73_00 Supplementary Conditions
00_73_02 OWRB Supplemental Conditions

VOLUME 2 OF 8

DIVISION 01 – GENERAL REQUIREMENTS
01_00_01 Basic Requirements
01_11_01 Sequence of Construction
01_29_00 Payment Procedures
01_32_34 Photographic & Video Log
01_33_01 General Submittal Requirements
01_33_02 Pre-Bid Equipment Submittal Requirements
01_36_00 Pipe Laying Prove-out
01_43_24 System Integrator Prequalification
01_45_24 Special Tests & Inspections
01_45_29 Testing Laboratory Services
01_56_17 Dust Control
01_75_23 Testing, Training & Facility Startup
01_78_23 Operation and Maintenance Data
01_78_34 Warranties and Bonds
01_91_01 Facility Commissioning

DIVISION 02 – EXISTING CONDITIONS
02_21_20 Subsurface Utility Engineering
02_30_00 Subsurface Investigation
02_41_00 Demolition

DIVISION 03 – CONCRETE
03_11_00 Concrete Formwork
03_15_20 Concrete Joints & Embedded Items
03_20_00 Concrete Reinforcement
03_21_18 Epoxy Bonding in Concrete
03_30_00 Cast-in-place Concrete
03_35_00 Concrete Finishes
03_60_00 Grouting
03_60_01 Basin Bottom Grout
03_70_00 Mass Concrete

CONTRACT DOCUMENTS
TABLE OF CONTENTS

DIVISION 05 – METALS
05_05_20 Anchorages
05_05_25 Mechanical Anchoring
05_50_00.01 Miscellaneous Metal Fabrications
05_51_00.13 Metal Ladders, Platforms & Stairs
05_52_00 Metal Railings
05_53_00.13 Metal Grates & Cover Plates

DIVISION 9 – FINISHES
09_91_00.13 Painting of Treatment Plants

DIVISION 10 - SPECIALTIES
10_44_16 Fire Extinguishers

DIVISION 13 – SPECIAL CONSTRUCTION
13_34_19 Metal Building Systems

VOLUME 3 OF 8

DIVISION 23 – HEATING, VENTILATING & AIR CONDITIONING (HVAC)
23_00_00 Mechanical General Requirements

DIVISION 26 – ELECTRICAL
26_05_00 Common Work Results for Electrical
26_05_20 Hazardous Classified Area Construction
26_06_00 Grounding & Bonding
26_07_00 Hangers & Supports
26_07_50 Identification for Electrical Systems
26_12_30 600-Volt or Less Wires & Cables
26_12_50 Fiber Optic Cable & Appurtenances
26_13_00 Conduits
26_13_30 Duct Banks
26_13_40 Boxes
26_13_60 Wireway
26_14_00 Wiring Devices
26_15_00 Low Voltage Wire Connections
26_21_00 Utility Coordination
26_26_20 Variable Frequency Drives 0.50-50 Horsepower
26_26_50 Reduced Harmonic Variable Frequency Drives
26_27_20 Dry-Type Transformers
26_28_50 Surge Protection Devices
26_29_00 Electrical Power Monitoring
26_30_50 Electrical System Studies
26_31_21.50 600KW Generator
26_32_13.60 200A Automatic Transfer Switch
26_32_13.10 15KW Generator
26_32_13.20 1750KW Generator
26_32_13.30 150A ATS

CONTRACT DOCUMENTS
TABLE OF CONTENTS

26_32_13.40 4000A ATS
26_41_10 Disconnect Switches
26_41_20 Low Voltage Molded Case Circuit Breakers
26_41_30 Low Voltage Insulated Case Circuit Breakers
26_42_20 Motor Starters
26_44_10 Group Mounted Circuit Breaker Switchboards
26_44_50 Panelboards
26_47_20 Package Power Supply Center
25_51_00 Lighting LED Luminaires
26_67_00 Lighting Protection
26_95_00 Field Electrical Acceptance Tests

DIVISION 27 – PROCESS CONTROL & INSTRUMENTATION SYSTEMS
27_05_00 Common Work Results for Process Control & Instrumentation Systems
27_10_00 Control Strategies
27_30_60 Level Measurement Ultrasonic
27_30_20 Flow Measurement Magnetic Flowmeters
27_34_00 Analytical Devices
27_40_70 Pressure Measurement Submersible
37_60_40 Temperature Measurement RTD
27_71_00 Control Systems Panel Enclosure and Panel Components
27_72_00 Control Systems Programmable Logic Controllers
27_73_30 Control Systems Network Materials & Equipment
27_73_31 Computer System Hardware
27_73_32 HMI System Software
27_95_00 Commissioning for Instrumentation & Controls

DIVISION 28 – ELECTRONIC SAFETY & SECURITY
28_21_01 CCTV Monitoring System

VOLUME 4 OF 8

DIVISION 31 – EARTHWORK
31_00_00 Earthwork
31_05_19 Geosynthetics for Earthwork
31_23_23.33 Flowable Fill
31_23_34 Utility Earthwork & Backfill
31_25_00 Erosion Control
31_41_33 Trench Shielding

DIVISION 32 – EXTERIOR IMPROVEMENTS
32_31_13 Chainlink Fences and Gates
32_92_00 Turf and Grasses

DIVISION 33 – UTILITIES
33_01_30.90 Bypass Pumping of Sewer Systems
33_01_33 Wastewater Liquid & Sludge Removal & Disposal
33_05_05.17 Mechanical Joint Restraint
33_05_07.13 Utility Directional Drilling

CONTRACT DOCUMENTS
TABLE OF CONTENTS

33_05_07.23 Utility Boring & Jacking
33_05_09.34 Concrete Thrust Blocks & Collars
33_05_25 Steel Casing Pipe
33_05_61 Concrete Manholes
33_05_64 Precast Reinforced Concrete Vault
33_05_97.23 Underground Utility Warning Tape
33_05_97.24 Utility Locator System

DIVISION 40 – PROCESS INTERCONNECTIONS
40_05_00.13 Piping Systems Testing
40_05_06.03 Pipe Couplings
40_05_07.03 Pipe Supports
40_05_12 Piping Specialties
40_05_19.20 Ductile Iron Pipe & Fittings
40_05_23 Stainless Steel Process Pipe & Tubing
40_05_33 High Density Polyethylene (HDPE) Pipe

VOLUME 5 OF 8

40_05_57.24 Electric Actuators for Valves and Gates
40_05_58 Specialty Valves
40_05_59.23 Stainless Steel Gates
40_05_61.43 Knife Gate Valves
40_05_62.64 Butterfly & Plug Valves
40_05_66.23 Surge Relief Angle Valves
40_05_67 Gate Valves
40_05_71.23 Mud Valves
40_41_13.01 Insulation and Heat Tracing
40_71_84 Parshall Flumes
40_75_43 Dissolved Oxygen Sensors

DIVISION 41 – MATERIALS PROCESSING AND HANDLING EQUIPMENT
41_21_23.15 Belt Conveyor System
41_22_00 Cranes & Hoists

DIVISION 43 – PROCESS & LIQUID HANDLING, PURIFICATION & STORAGE EQUIPMENT
43_11_16 High Efficiency Blower Packages
43_23_31.35 Non-Potable Water Pumps
43_23_58.03 Positive Displacement Rotary Lobe Pumps
43_25_13.13 Submersible Pump System

DIVISION 46 – WATER & WASTEWATER EQUIPMENT
46_05_09 Process Equipment Identification
46_05_12 Equipment General Provisions
46_07_54 Waste Activated Sludge Pump Station
46_21_53 Perforated Fine Screen
46_21_73.13 Screw Washer Compactor
46_23_24 Grit Removal, Washing & Dewatering
46_33_33 Polymer Blending & Feed Equipment

CONTRACT DOCUMENTS
TABLE OF CONTENTS

46_41_23	Submersible Mixers
46_51_55	Low Profile Cascade Aerator
46_53_57	SBR & Aerobic Digester
46_66_57	UV Disinfection Equipment
46_76_21.03	Belt Filter Press System

VOLUME 6 OF 8
CONSTRUCTION DRAWINGS – NORTHSIDE WASTEWATER TREATMENT PLANT

VOLUME 7 OF 8
CONSTRUCTION DRAWINGS – SOUTHSIDE & LIFT STATIONS

VOLUME 8 OF 8
CONSTRUCTION DRAWINGS – CONVEYANCE

Prequalified Contractors

The following contractors have been prequalified by the City of Shawnee for this project:

A. Wastewater System Improvements, General Contractors
    a. Crossland Heavy Contractors, Edmond, OK
    b. Downey Contracting, LLC, Oklahoma City, OK
    c. MWH Constructors, Inc, Broomfield, CO
    d. Oscar Renda Contracting, Inc, Grapevine, TX
    e. Thalle Construction Co, Inc, Hillsborough, NC
    f. Wynn Construction Co, Inc, Oklahoma City, OK

B. HDPE Sewermain, Subcontractors
    a. Prequalified General Contractors (Self-Perform all associated work without subcontractors)
    b. McGuire Brothers Construction, Tulsa, OK
    c. Belt Construction, Texarkana, AR
    d. Krapff Reynolds, Oklahoma City, OK
    e. Orr Construction, Davenport, OK
    f. TIMCO Blasting & Coatings, Inc, Bristow, OK
    g. Marsau Enterprises, Enid, OK

REQUIREMENTS FOR BIDDERS

In accordance with State Law and project requirements, the following documents **must** be included in each Bid Proposal packet submitted for consideration. Failure to submit all of the items called for may render the bid proposals incomplete, thus eliminating the bidder from further consideration. They include:

1. 00_41_13 Bid Form
2. 00_43_13 Bid Security Form
3. 00_45_19 Noncollusion Affidavit
4. 00_45_20 Business Relationship Affidavit
5. 00_46_47.19 DBE Guidance
6. 00_46_47.23 DBE Subcontractor Participation Form
7. 00_46_47.26 DBE Subcontractor Performance Form
8. 00_46_47.29 DBE Subcontractor Utilization Form
9. 00_46_47.33 American Iron & Steel Certification
10. 00_46_47.36 Bidder Statements

In addition, the required documents must be completely filled out and executed in accordance with the requirements of the Contract Documents to be considered responsive. Some of these items include, but are not limited to:

1. Bid Form has been signed by an authorized signatory of the Contractor
2. All addenda issued by the Engineer or Owner have been acknowledged on the Bid Form.

ADVERTISEMENT FOR BIDS

SHAWNEE WASTEWATER SYSTEM IMPROVEMENTS

Shawnee Municipal Authority (Owner) is requesting Bids for the construction of the following Project:

Wastewater System Improvements

Bids for the construction of the Project will be received at the **City of Shawnee** located at **Office of the City Clerk, City of Shawnee, 16 West 9th Street, Shawnee, OK 74801-6812** until **August 1st, 2022 at 4:00pm** local time. Bids received will be publicly opened and read along at the Owner's public meeting on August 1st at 6:30pm local time. Bids received more than ninety-six (96) hours prior to the Bid Opening will be returned. All bids received at said time will be opened and evaluated for completeness and correctness. All work shall be performed and all construction and materials used and furnished shall be in accordance with the Contract Documents prepared by Wall Engineering, LLC.

Only contactors previously selected as prequalified by the City of Shawnee will be allowed to bid this project.

The contract is to be awarded to the lowest, responsive, responsible bidder. The Owner reserves the right to correct any non-material clerical errors in the bidding as allowed under Oklahoma Law. The Owner reserves the right to reject any and all bids in accordance with the Oklahoma Public Competitive Bidding Act of 1974. Conditional bids shall not be accepted.

The Project includes the following Work:

> **New 4.5 MGD SBR Wastewater Treatment Plant & Related Equipment/Units, New Southside Wastewater Lift Station & Screening System, 24" HDPE Forcemain between New WWTP and New Lift Station, & 30" HDPE Discharge Forcemain to Discharge Location.**

Funding for this project is provided through the Oklahoma Water Resources Board's Clean Water State Revolving Fund (CWSRF) program. As such, compliance with the Davis Bacon Act, American Iron and Steel, and Labor Standards Contract Provisions is mandatory.

Each bidder shall accompany his original bid, filed with the Shawnee Municipal Authority, with a certified or Cashier's Check on a solvent bank located in Oklahoma, or a Bidder's Bond, in the amount of five (5) percent of the amount bid, as a guarantee of his ability to perform the contract bid upon, and that he will enter into a written contract with the Owner to perform said work and/or furnish said materials in accordance with said Plans and Specifications, and furnish the required bonds according to the Public Competitive Bidding Act of 1974.

The Owner will retain the deposit for liquidated damages in case the successful bidder fails to enter in said contract and furnish the required bonds provided for in the specifications within the time required. Deposit of the unsuccessful bidders will be returned upon the execution of the Contract and required bonds.

Each bidder shall accompany his bid with a sworn statement in writing that the bidder has not directly or indirectly entered into an agreement, expressed or implied, with any other bidder concerning the price or amount of such bid or any bids, the limiting of the bids or bidders, the paying to anyone any money for promotion expenses, the parceling or farming out to any bidder or bidders or other persons of any part of the contract or any part of the subject matter of the bid or of the profits thereof.

Construction, Maintenance and Statutory Payment Bonds in the amount of 100% of the contract price are required for this project. These bonds must be obtained from a Corporate Surety licensed in Oklahoma,

and approved by the Owner and Consulting Engineer. The bidder shall state in the proposal the name and address of the Surety or Sureties who will sign this bond in case the contract is awarded. The Maintenance Bond required will guarantee the repair of all damage due to improper materials or workmanship for a period of one (1) year after the acceptance of the work by the Owner.

This project is to be financed by a CWSRF loan from the Oklahoma Water Resources Board (OWRB) and shall be referred to as Project No. ORF20-0018-CW. The following requirements and regulations must be complied with:

Equal Opportunity in Employment: All qualified applicants will receive consideration for employment without regard to race, color, religion, sex, national origin, age or physical handicap. Bidders on this work will be required to comply with the President's Executive Order No. 11246, as amended.

Each bidder must fully comply with the requirements, terms and conditions of the Environmental Protection Agency's Disadvantaged Business Enterprise Requirements including employing the six (6) good faith efforts and soliciting disadvantaged business enterprises during the performance of this contract. The bidder commits itself to following the good faith efforts to solicit disadvantaged business enterprises contained herein and all other requirements, terms and conditions of these bid conditions by submitting a properly signed bid. Requirements are contained in OWRB's Guidance and Procedures, ORF-267.

Davis Bacon Act wage rules shall apply. All laborers and mechanics employed by contractors and sub-contractors on projects funded directly by or assisted in whole or in part by and through the Federal Government shall be paid wages at rates not less than those prevailing on projects of a character similar in the locality as determined by the Secretary of Labor in accordance with subchapter IV of Chapter 31 of Title 40, United States Code and 29 CFR parts 1,3, and 5. The Department of Labor provides all pertinent information related to compliance with labor standards, including prevailing wage rates and instructions for reporting. For more information please refer to Oklahoma Water Resources Board Supplemental Conditions, ORF-185 as well as http://www.beta.sam.gov/."

American Iron and Steel provisions also apply to projects funded directly by or assisted in whole or in part by and through the Federal Government pursuant to P.L. 113-76, Consolidated Appropriations Act, 2014, Sec. 436 requires that "None of the funds made available by a State water pollution control revolving fund as authorized by title VI of the Federal Water Pollution Control Act (33 U.S.C. 1381 et seq.) or made available by a drinking water treatment revolving loan fund as authorized by section 1452 of the Safe Drinking Water Act (42 U.S.C. 300j-12) shall be used for a project for the construction, alteration, maintenance, or repair of a public water system or treatment works unless all of the iron and steel products used in the project are produced in the United States." For more information, please refer to Oklahoma Water Resources Board Supplemental Conditions ORF-185.

System for Award Management (SAM) registration is required for all SRF programs (CWSRF and DWSRF) applicants and Awardees (Entities, Prime Contractors, Subcontractors, Vendors) in order to be awarded contracts by the SRF Programs. SAM replaces Central Contractor Registration/Federal Agency Registration, Online Representations and Certifications Application, and Excluded Parties List System. Applicants and awardees are required to complete a one-time free registration to provide basic information relevant to procurement and financial transactions. Registrants must retain an active status to be eligible for SRF projects. New Applicants and Awardees can go to SAM.gov to complete the registration process.

Note: In order to register in SAM, a Data Universal Number System (DUNS) number will be required. DUNS number is a unique, non-indicative 9-digit identifier issued and maintained by Dun & Bradstreet (D&B) that verifies the existence of a business entity globally. D&B assigns DUNS numbers for each physical

location of a business. All entities doing business with the U.S Government can receive a DUNS number FREE of charge and, under normal circumstances, within 1-2 business days when using D&B web form process at http://fedgov.dnb.com/webform.

Information and Bidding Documents for the Project can be found at the following Designated Bidding Website:

www.civcastusa.com

Bidding Documents may be downloaded from the Designated Bidding Website. Prospective Bidders are required to register with the Designated Bidding Website as a plan holder, even if Bidding Documents are obtained from a plan room or source other than the Designated Website in either electronic or paper format. The Designated Bidding Website will be updated periodically with addenda, lists of registered plan holders, reports, and other information relevant to submitting a Bid for the Project. All official notifications, addenda, and other Bidding Documents will be offered only through the Designated Bidding Website. Neither Owner nor Engineer will be responsible for Bidding Documents, including addenda, if any, obtained from sources other than the Designated Bidding Website.

Printed copies of the Bidding Documents may be obtained from the Designated Bidding Website for an additional fee. See Designated Bidding Website for information.

A **mandatory pre-bid conference** for the Project will be held on **July 14th, 2022 at 10:00am at Shawnee City Hall, 16 West 9th Street, Shawnee, OK.** Bids will not be accepted from Bidders that do not attend the mandatory pre-bid conference.

For all further requirements regarding bid submittal, qualifications, procedures, and contract award, refer to the Instructions to Bidders that are included in the Bidding Documents.

Bids must remain in effect for 60 days after the bid opening date. Within 60 days from the bid date, the Owner may award the contract to the lowest responsive, responsible bidder or reject any or all bids for the project.

The Owner reserves the right to reject any or all bids, to waive irregularities in the bids and bidding deemed to be in the best interests of the Owner, and to reject nonconforming, nonresponsive, or conditional bids. In case of ambiguity or lack of clearness in stating the price in the bids, the Owner reserves the right to consider the most advantageous construction thereof, or to reject the bid. Unreasonable or unbalanced unit prices will be considered sufficient cause of rejection of any bid or bids.

This Advertisement is issued by:

Owner: **Shawnee Municipal Authority**
Date: **[6/28/22]**

INSTRUCTIONS TO BIDDERS FOR CONSTRUCTION CONTRACT

TABLE OF CONTENTS

Page

Article 1— Defined Terms 1
Article 2— Bidding Documents 1
Article 3— Qualifications of Bidders 2
Article 4— Pre-Bid Conference 3
Article 5— Site and Other Areas; Existing Site Conditions; Examination of Site; Owner's Safety Program; Other Work at the Site 3
Article 6— Bidder's Representations and Certifications 5
Article 7— Interpretations and Addenda 6
Article 8— Bid Security 6
Article 9— Contract Times 7
Article 10— Substitute and "Or Equal" Items 7
Article 11— Subcontractors, Suppliers, and Others 7
Article 12— Preparation of Bid 8
Article 13— Basis of Bid 11
Article 14— Submittal of Bid 12
Article 15— Modification and Withdrawal of Bid 12
Article 16— Opening of Bids 12
Article 17— Bids to Remain Subject to Acceptance 13
Article 18— Evaluation of Bids and Award of Contract 13
Article 19— Signing of Agreement 14
Article 20— Sales and Use Taxes 14
Article 21— Wage rate requirements & other provisions 14

ARTICLE 1—DEFINED TERMS

1.1 Terms used in these Instructions to Bidders have the meanings indicated in the General Conditions and Supplementary Conditions. Additional terms used in these Instructions to Bidders have the meanings indicated below:

1. Designated Website - The website specifically defined as www.civcastusa.com from which the Contract Documents and project information are issued/distributed and with which all plan holders are required to be registered.

ARTICLE 2—BIDDING DOCUMENTS

2.01 Bidder shall obtain a complete set of Bidding Requirements and proposed Contract Documents (together, the Bidding Documents). See the Agreement for a list of the Contract Documents. It is Bidder's responsibility to determine that it is using a complete set of documents in the preparation of a Bid. Bidder assumes sole responsibility for errors or misinterpretations resulting from the use of incomplete documents, by Bidder itself or by its prospective Subcontractors and Suppliers.

2.02 Bidding Documents are made available for the sole purpose of obtaining Bids for completion of the Project and permission to download or distribution of the Bidding Documents does not confer a license or grant permission or authorization for any other use. Authorization to download documents, or other distribution, includes the right for plan holders to print documents solely for their use, and the use of their prospective Subcontractors and Suppliers, provided the plan holder pays all costs associated with printing or reproduction. Printed documents may not be re-sold under any circumstances.

2.03 Owner has established a Bidding Documents Website as indicated in the Advertisement or invitation to bid. Owner recommends that Bidder register as a plan holder with the Issuing Office at such website, and obtain a complete set of the Bidding Documents from such website. Bidders may rely that sets of Bidding Documents obtained from the Bidding Documents Website are complete, unless an omission is blatant. Registered plan holders will receive Addenda issued by Owner.

2.04 Plan rooms (including construction information subscription services, and electronic and virtual plan rooms) may distribute the Bidding Documents, or make them available for examination. Those prospective bidders that obtain an electronic (digital) copy of the Bidding Documents from a plan room are **REQUIRED** to register as plan holders from the Designated Website. Owner is not responsible for omissions in Bidding Documents or other documents obtained from plan rooms, or for a Bidder's failure to obtain Addenda from a plan room.

2.05 *Electronic Documents*

A. When the Bidding Requirements indicate that electronic (digital) copies of the Bidding Documents are available, such documents will be made available to the Bidders as Electronic Documents in the manner specified.

1. Bidding Documents will be provided in Adobe PDF (Portable Document Format) (.pdf) that is readable by Adobe Acrobat Reader, latest version. It is the intent of the Engineer and Owner that such Electronic Documents are to be exactly representative of the paper copies of the documents. However, because the Owner and Engineer cannot totally

EJCDC® C-200, Instructions to Bidders for Construction Contract.
Copyright© 2018 National Society of Professional Engineers, American Council of Engineering Companies, and American Society of Civil Engineers. All rights reserved.

control the transmission and receipt of Electronic Documents nor the Contractor's means of reproduction of such documents, the Owner and Engineer cannot and do not guarantee that Electronic Documents and reproductions prepared from those versions are identical in every manner to the paper copies.

B. Unless otherwise stated in the Bidding Documents, the Bidder may use and rely upon complete sets of Electronic Documents of the Bidding Documents, described in Paragraph 2.06.A above. However, Bidder assumes all risks associated with differences arising from transmission/receipt of Electronic Documents versions of Bidding Documents and reproductions prepared from those versions and, further, assumes all risks, costs, and responsibility associated with use of the Electronic Documents versions to derive information that is not explicitly contained in printed paper versions of the documents, and for Bidder's reliance upon such derived information.

ARTICLE 3—QUALIFICATIONS OF BIDDERS

3.01 Potential Bidders have been pre-qualified prior to bid date by a formal prequalification process. Prequalified bidders are as follows:

A. Prime Contractors

1. Crossland Heavy Contractors, Edmond, OK
2. Downey Contracting, LLC, Oklahoma City, OK
3. MWH Constructors, Inc, Broomfield, CO
4. Oscar Renda Contracting, Inc, Grapevine, TX
5. Thalle Construction Co, Inc, Hillsborough, NC
6. Wynn Construction Co, Inc, Oklahoma City, OK

B. HDPE Subcontractors

1. Prequalified General Contractors (Self-Perform all associated work without subcontractors)
2. McGuire Brothers Construction, Tulsa, OK
3. Belt Construction, Texarkana, AR
4. Krapff Reynolds, Oklahoma City, OK
5. Orr Construction, Davenport, OK
6. TIMCO Blasting & Coatings, Inc, Bristow, OK
7. Marsau Enterprises, Enid, OK

3.02 The Successful bidder shall perform work amounting to the percentage (%) limits stated in SC 7.07A., using its own equipment and personnel. No portion of the Contract shall be sublet, assigned, or otherwise disposed of except with the expressed written consent of the Owner. If the Successful bidder fails to demonstrate to the Owner that it has the ability to perform the specified percentage of the Contract work with its own equipment and personnel, its Bid may be considered non-responsive.

3.03 ~~Bidder is to submit the following information with its Bid to demonstrate Bidder's qualifications to perform the Work:~~

~~A. Written evidence establishing its qualifications such as financial data, previous experience, and present commitments as required in Section 00_45_13.~~

EJCDC® C-200, Instructions to Bidders for Construction Contract.
Copyright© 2018 National Society of Professional Engineers, American Council of Engineering Companies, and American Society of Civil Engineers. All rights reserved.

~~B. A written statement that Bidder is authorized to do business in the state where the Project is located, or a written certification that Bidder will obtain such authority prior to the Effective Date of the Contract.~~

~~C. Bidder's state or other contractor license number, if applicable.~~

~~D. Subcontractor and Supplier qualification information, if applicable.~~

~~E. Other required information regarding qualifications.~~

~~F. Statement of Qualifications as outlined in Section 00_45_13 Bidder's Qualifications~~

3.04 ~~A Bidder's failure to submit required qualification information within the times indicated may disqualify Bidder from receiving an award of the Contract.~~

3.05 No requirement in this Article 3 to submit information will prejudice the right of Owner to seek additional pertinent information regarding Bidder's qualifications.

ARTICLE 4—PRE-BID CONFERENCE

4.01 A mandatory pre-bid conference will be held at the time and location indicated in the Advertisement to bid. Representatives of Owner and Engineer will be present to discuss the Project. Proposals will not be accepted from Bidders who do not attend the conference. It is each Bidder's responsibility to sign in at the pre-bid conference to verify its participation. Bidders must sign in using the name of the organization that will be submitting a Bid. A list of qualified Bidders that attended the pre-bid conference and are eligible to submit a Bid for this Project will be issued in an Addendum.

ARTICLE 5—SITE AND OTHER AREAS; EXISTING SITE CONDITIONS; EXAMINATION OF SITE; OWNER'S SAFETY PROGRAM; OTHER WORK AT THE SITE

5.01 *Site and Other Areas*

A. The Site is identified in the Bidding Documents. By definition, the Site includes rights-of-way, easements, and other lands furnished by Owner for the use of the Contractor. Any additional lands required for temporary construction facilities, construction equipment, or storage of materials and equipment, and any access needed for such additional lands, are to be obtained and paid for by Contractor.

5.02 *Existing Site Conditions*

A. *Subsurface and Physical Conditions; Hazardous Environmental Conditions*

1. The Supplementary Conditions identify the following regarding existing conditions at or adjacent to the Site:

a. Those reports of explorations and tests of subsurface conditions at or adjacent to the Site that contain Technical Data.

b. Those drawings known to Owner of existing physical conditions at or adjacent to the Site, including those drawings depicting existing surface or subsurface structures at or adjacent to the Site (except Underground Facilities), that contain Technical Data.

Copyright© 2018 National Society of Professional Engineers, American Council of Engineering Companies, and American Society of Civil Engineers. All rights reserved.

c. Reports and drawings known to Owner relating to Hazardous Environmental Conditions that have been identified at or adjacent to the Site.

d. Technical Data contained in such reports and drawings.

2. Owner will make copies of reports and drawings referenced above available to any Bidder on request. These reports and drawings are not part of the Contract Documents, but the Technical Data contained therein upon whose accuracy Bidder is entitled to rely, as provided in the General Conditions, has been identified and established in the Supplementary Conditions. Bidder is responsible for any interpretation or conclusion Bidder draws from any Technical Data or any other data, interpretations, opinions, or information contained in such reports or shown or indicated in such drawings.

3. If the Supplementary Conditions do not identify Technical Data, the default definition of Technical Data set forth in Article 1 of the General Conditions will apply.

B. *Underground Facilities:* Underground Facilities are shown or indicated on the Drawings, pursuant to Paragraph 5.05 of the General Conditions, and not in the drawings referred to in Paragraph 5.02.A of these Instructions to Bidders. Information and data regarding the presence or location of Underground Facilities are not intended to be categorized, identified, or defined as Technical Data.

5.03 *Other Site-related Documents*

A. In addition to the documents regarding existing Site conditions referred to in Paragraph 5.02.A, the following other documents relating to conditions at or adjacent to the Site are known to Owner and made available to Bidders for reference:

1. **None.**

Owner will make copies of these other Site-related documents available to any Bidder on request.

B. Owner has not verified the contents of these other Site-related documents, and Bidder may not rely on the accuracy of any data or information in such documents. Bidder is responsible for any interpretation or conclusion Bidder draws from the other Site-related documents.

C. The other Site-related documents are not part of the Contract Documents.

D. Bidders are encouraged to review the other Site-related documents, but Bidders will not be held accountable for any data or information in such documents. The requirement to review and take responsibility for documentary Site information is limited to information in (1) the Contract Documents and (2) the Technical Data.

E. No other Site-related documents are available.

5.04 *Site Visit and Testing by Bidders*

A. Bidder is required to visit the Site and conduct a thorough visual examination of the Site and adjacent areas. During the visit the Bidder must not disturb any ongoing operations at the Site.

B. Bidders visiting the Site are required to arrange their own transportation to the Site.

EJCDC® C-200, Instructions to Bidders for Construction Contract.
Copyright© 2018 National Society of Professional Engineers, American Council of Engineering Companies, and American Society of Civil Engineers. All rights reserved.

C. All access to the Site other than during a regularly scheduled Site visit must be coordinated through the following Owner or Engineer contact for visiting the Site. Bidder must conduct the required Site visit during normal working hours.

D. Bidder is not required to conduct any subsurface testing, or exhaustive investigations of Site conditions.

E. On request, and to the extent Owner has control over the Site, and schedule permitting, the Owner will provide Bidder general access to the Site to conduct such additional examinations, investigations, explorations, tests, and studies as Bidder deems necessary for preparing and submitting a successful Bid. Owner will not have any obligation to grant such access if doing so is not practical because of existing operations, security or safety concerns, or restraints on Owner's authority regarding the Site. Bidder is responsible for establishing access needed to reach specific selected test sites.

F. Bidder must comply with all applicable Laws and Regulations regarding excavation and location of utilities, obtain all permits, and comply with all terms and conditions established by Owner or by property owners or other entities controlling the Site with respect to schedule, access, existing operations, security, liability insurance, and applicable safety programs.

G. Bidder must fill all holes and clean up and restore the Site to its former condition upon completion of such explorations, investigations, tests, and studies.

5.05 *Owner's Safety Program*

A. Site visits and work at the Site may be governed by an Owner safety program. If an Owner safety program exists, it will be noted in the Supplementary Conditions.

5.06 *Other Work at the Site*

A. Reference is made to Article 8 of the Supplementary Conditions for the identification of the general nature of other work of which Owner is aware (if any) that is to be performed at the Site by Owner or others (such as utilities and other prime contractors) and relates to the Work contemplated by these Bidding Documents. If Owner is party to a written contract for such other work, then on request, Owner will provide to each Bidder access to examine such contracts (other than portions thereof related to price and other confidential matters), if any.

ARTICLE 6—BIDDER'S REPRESENTATIONS AND CERTIFICATIONS

6.01 *Express Representations and Certifications in Bid Form, Agreement*

A. The Bid Form that each Bidder will submit contains express representations regarding the Bidder's examination of Project documentation, Site visit, and preparation of the Bid, and certifications regarding lack of collusion or fraud in connection with the Bid. Bidder should review these representations and certifications, and assure that Bidder can make the representations and certifications in good faith, before executing and submitting its Bid.

B. If Bidder is awarded the Contract, Bidder (as Contractor) will make similar express representations and certifications when it executes the Agreement.

EJCDC® C-200, Instructions to Bidders for Construction Contract.
Copyright© 2018 National Society of Professional Engineers, American Council of Engineering Companies, and American Society of Civil Engineers. All rights reserved.

ARTICLE 7—INTERPRETATIONS AND ADDENDA

7.01 Owner on its own initiative may issue Addenda to clarify, correct, supplement, or change the Bidding Documents.

7.02 Bidder shall submit all questions about the meaning or intent of the Bidding Documents to Engineer in writing **via Designated Website**. Contact information and submittal procedures for such questions are as follows:

A. **Submitted via Designated Website at www.civcastusa.com.**

7.03 Interpretations or clarifications considered necessary by Engineer in response to such questions will be issued by Addenda delivered to all registered plan holders **and/or posted on Designated Website.** Questions received less than seven days prior to the date for opening of Bids may not be answered.

7.04 Only responses set forth in an Addendum **or posted on Designated Website** will be binding. Oral and other interpretations or clarifications will be without legal effect. Responses to questions are not part of the Contract Documents unless set forth in an Addendum or **posted on Designated Website** that expressly modifies or supplements the Contract Documents.

ARTICLE 8—BID SECURITY

8.01 A Bid must be accompanied by Bid security made payable to Owner in an amount of **5% percent of Bidder's maximum Bid price (determined by adding the base bid and all alternates)** and in the form of a Bid bond issued by a surety meeting the requirements of Paragraph 6.01 of the General Conditions. Such Bid bond will be issued in the form included in the Bidding Documents. **Bid security must be at least 5% of the Bidder's maximum Bid price.**

8.02 The Bid security of the apparent Successful Bidder will be retained until Owner awards the contract to such Bidder, and such Bidder has executed the Contract, furnished the required Contract security, and met the other conditions of the Notice of Award, whereupon the Bid security will be released. If the Successful Bidder fails to execute and deliver the Contract and furnish the required Contract security within 15 days after the Notice of Award, Owner may consider Bidder to be in default, annul the Notice of Award, and the Bid security of that Bidder will be forfeited, in whole in the case of a penal sum bid bond, and to the extent of Owner's damages in the case of a damages-form bond. Such forfeiture will be Owner's exclusive remedy if Bidder defaults.

8.03 The Bid security of other Bidders that Owner believes to have a reasonable chance of receiving the award may be retained by Owner until the earlier of 7 days after the Effective Date of the

EJCDC® C-200, Instructions to Bidders for Construction Contract.
Copyright© 2018 National Society of Professional Engineers, American Council of Engineering Companies, and American Society of Civil Engineers. All rights reserved.

Contract or 61 days after the Bid opening, whereupon Bid security furnished by such Bidders will be released.

8.04 Bid security of other Bidders that Owner believes do not have a reasonable chance of receiving the award will be released within 7 days after the Bid opening.

ARTICLE 9—CONTRACT TIMES

9.01 The number of days within which, or the dates by which, the Work is to be (a) substantially completed and (b) ready for final payment, and (c) Milestones (if any) are to be achieved, are set forth in the Agreement.

9.02 Provisions for liquidated damages, if any, for failure to timely attain a Milestone, Substantial Completion, or completion of the Work in readiness for final payment, are set forth in the Agreement.

ARTICLE 10—SUBSTITUTE AND "OR EQUAL" ITEMS

10.01 The Contract for the Work, as awarded, will be on the basis of materials and equipment specified or described in the Bidding Documents, and those "or-equal" or substitute or materials and equipment subsequently approved by Engineer prior to the submittal of Bids and identified by Addendum. No item of material or equipment will be considered by Engineer as an "or-equal" or substitute unless written request for approval has been submitted by Bidder and has been received by Engineer within 10 days of the issuance of the Advertisement for Bids or invitation to Bidders. Each such request must comply with the requirements of Paragraphs 7.05 and 7.06 of the General Conditions, and the review of the request will be governed by the principles in those paragraphs. The burden of proof of the merit of the proposed item is upon Bidder. Engineer's decision of approval or disapproval of a proposed item will be final. If Engineer approves any such proposed item, such approval will be set forth in an Addendum issued to all registered Bidders. Bidders cannot rely upon approvals made in any other manner.

10.02 All prices that Bidder sets forth in its Bid will be based on the presumption that the Contractor will furnish the materials and equipment specified or described in the Bidding Documents, as supplemented by Addenda. Any assumptions regarding the possibility of post-Bid approvals of "or-equal" or substitution requests are made at Bidder's sole risk.

10.03 If "or-equal" or "equivalent" or similar verbiage is not included in the Specification Section governing the item it should be assumed that the Owner has specifically selected the named item and substitutions or equivalents will not be accepted or considered.

ARTICLE 11—SUBCONTRACTORS, SUPPLIERS, AND OTHERS

11.01 The apparent Successful Bidder, and any other Bidder so requested, shall within 24 hours after Bid opening, submit Section 00 41 16, List of Manufacturers and Section 00 41 19, List of Proposed Subcontractors, for approval of the Owner.

11.02 If requested by Owner, before executing any subcontract, and within three (3) days after bid opening, the apparent Successful Bidder, and any other Bidder so requested, shall submit an experience statement with pertinent information regarding similar projects and other evidence of qualification for each such Subcontractor, Supplier, or other individual or entity. If Owner or Engineer, after due investigation, has reasonable objection to any proposed Subcontractor,

EJCDC® C-200, Instructions to Bidders for Construction Contract.
Copyright© 2018 National Society of Professional Engineers, American Council of Engineering Companies, and American Society of Civil Engineers. All rights reserved.

Supplier, individual, or entity, Owner may, before the Notice of Award is given, request apparent Successful Bidder to submit an acceptable substitute, in which case apparent Successful Bidder shall submit a substitute, Bidder's Bid price will be increased (or decreased) by the difference in cost occasioned by such substitution, and Owner may consider such price adjustment in evaluating Bids and making the Contract award. Declining to make requested substitutions will not constitute grounds for forfeiture of the Bid security of any Bidder.

11.03 If apparent Successful Bidder declines to make any such substitution, Owner may award the Contract to the next lowest Bidder that proposes to use acceptable Subcontractors and Suppliers. Declining to make requested substitutions will constitute grounds for forfeiture of the Bid security of any Bidder. Any Subcontractor or Supplier, so listed and against which Owner or Engineer makes no written objection prior to the giving of the Notice of Award will be deemed acceptable to Owner and Engineer subject to subsequent revocation of such acceptance as provided in Paragraph 7.07 of the General Conditions.

11.04 The quantities of work or material stated in unit price items of the Bid are supplied only to give an indication of the general scope of the Work; the Owner does not expressly or by implication agree that the actual amount of work or material will correspond therewith.

11.05 The Contractor shall not award work to Subcontractor(s) in excess of the limits stated in SC 7.07A.

ARTICLE 12—PREPARATION OF BID

12.01 The Bid Form is included with the Bidding Documents.

A. All blanks on the Bid Form must be completed in ink and the Bid Form signed in ink. Erasures or alterations must be initialed in ink by the person signing the Bid Form. A Bid price must be indicated for each section, Bid item, alternate, adjustment unit price item, and unit price item listed therein.

B. If the Bid Form expressly indicates that submitting pricing on a specific alternate item is optional, and Bidder elects to not furnish pricing for such optional alternate item, then Bidder may enter the words "No Bid" or "Not Applicable."

C. A conditional bid will not be considered.

12.02 If Bidder has obtained the Bidding Documents as Electronic Documents, then Bidder shall prepare its Bid on a paper copy of the Bid Form printed from the Electronic Documents version of the Bidding Documents. The printed copy of the Bid Form must be clearly legible, printed on 8½ inch by 11-inch paper and as closely identical in appearance to the Electronic Document version of the Bid Form as may be practical. The Owner reserves the right to accept Bid Forms which nominally vary in appearance from the original paper version of the Bid Form, providing that all required information and submittals are included with the Bid.

12.03 A Bid by a corporation must be executed in the corporate name by a corporate officer (whose title must appear under the signature), accompanied by evidence of authority to sign. The corporate address and state of incorporation must be shown.

12.04 A Bid by a partnership must be executed in the partnership name and signed by a partner (whose title must appear under the signature), accompanied by evidence of authority to sign. The official address of the partnership must be shown.

EJCDC® C-200, Instructions to Bidders for Construction Contract.
Copyright© 2018 National Society of Professional Engineers, American Council of Engineering Companies, and American Society of Civil Engineers. All rights reserved.

12.05 A Bid by a limited liability company must be executed in the name of the firm by a member or other authorized person and accompanied by evidence of authority to sign. The state of formation of the firm and the official address of the firm must be shown.

12.06 A Bid by an individual must show the Bidder's name and official address.

12.07 A Bid by a joint venture must be executed by an authorized representative of each joint venturer in the manner indicated on the Bid Form. The joint venture must have been formally established prior to submittal of a Bid, and the official address of the joint venture must be shown.

12.08 All names must be printed in ink below the signatures.

12.09 The Bid must contain an acknowledgment of receipt of all Addenda, the numbers of which must be filled in on the Bid Form.

12.10 Postal and e-mail addresses and telephone number for communications regarding the Bid must be shown.

12.11 The Bid must contain evidence of Bidder's authority to do business in the state where the Project is located, or Bidder must certify in writing that it will obtain such authority within the time for acceptance of Bids and attach such certification to the Bid.

12.12 If Bidder is required to be licensed to submit a Bid or perform the Work in the state where the Project is located, the Bid must contain evidence of Bidder's licensure, or Bidder must certify in writing that it will obtain such licensure within the time for acceptance of Bids and attach such certification to the Bid. Bidder's state contractor license number, if any, must also be shown on the Bid Form.

12.13 All bids must be made on the required bid form, where all blank spaces for bid prices must be filled in, in ink or typewritten. The bid form must be fully completed and executed when submitted. Only one copy of the bid form is required. The Owner may waive any informalities or minor defects, or reject any and all bids as allowed under Oklahoma Law. Any bid may be withdrawn prior to the above scheduled time for bid opening, or authorized postponement thereof. Bids received more than ninety-six (96) hours before the time specified, or those received after the time set for bid opening will not be considered and will be returned unopened. Should there be reasons why the contract cannot be awarded within the specified period, the time may be extended by mutual agreement between the Owner and the bidders.

12.14 Bidders must satisfy themselves of the accuracy of estimated quantities in the bid proposal by review of the Plans and Specifications, including any existing addenda, and by examination of the project site. Once a bid is submitted, the bidder shall not assert that there was a misunderstanding concerning the quantities or the nature of work to be performed. The failure or omission of any bidder to do any of the foregoing shall in no way relieve any bidder from any obligation in respect to its bid.

12.15 Prior to bidding, the Owner shall provide to the bidders all pertinent information that delineates and describes the land owned and rights-of-way acquired or to be acquired.

12.16 The Contract Documents contain the provisions required for the construction of the product. Information obtained from an officer, agent, or employee of the Owner or any other person

EJCDC® C-200, Instructions to Bidders for Construction Contract.
Copyright© 2018 National Society of Professional Engineers, American Council of Engineering Companies, and American Society of Civil Engineers. All rights reserved.

shall not affect the risks or obligations assumed by the contractor, or relieve the contractor from fulfilling any of the conditions of the contract.

12.17 Each bid exceeding $100,000 must be accompanied by a Bid Bond for five percent of the total amount of the bid and payable to the Owner. A certified check may be used in lieu of the Bid Bond. As soon as the bid prices have been compared, the Owner will return the bonds of all except the three lowest responsive, responsible bidders. The bid securities of the successful bidder and the two remaining unsuccessful bidders will be returned upon Owner's approval of the successful bidder's executed certificate of insurance and construction bonds.

12.18 Construction bonds (Performance, Statutory, and Maintenance) in the amount of 100 percent with a corporate surety approved by the Owner will be required for the faithful performance of the contract. Attorneys-in-fact who sign bid and construction bonds must file with each bond a certified and effective dated copy of their Power-of-Attorney.

12.19 The Owner shall award a contract to the lowest, responsive, responsible bidder or bidders within thirty (30) calendar days after bid opening. The Owner may extend the award period not to exceed fifteen (15) calendar days by formal recorded action and for good cause. The time may be extended further by mutual agreement between the Owner and the bidder per O.S. Title 61 Section 111, Public Competitive Bidding Act of 1974 (PCBA).

12.20 The Notice of Award shall be accompanied by the necessary contract, bonds, and insurance. In the event of failure of the bidder to execute the contract, the Owner may consider the bidder in default, in which case the Bid Bond accompanying the proposal shall become the property of the Owner.

12.21 The party to whom the contract is awarded will be required to execute the contract and obtain the construction bonds (Performance, Statutory and Maintenance) and certificate of insurance within 15 calendar days (not to exceed 60 days) from the date when the Notice of Award is delivered to the bidder. The time may be extended further by mutual agreement between the Owner and the bidder per O.S. Title 61 Section 113 (PCBA).

12.22 With an acceptable contract, bonds and certificate of insurance signed by the party to whom the Contract was awarded, the Owner shall sign the contract and return to such party an executed duplicate. Should the Owner not execute the contract within the agreed upon period, the bidder may by written notice withdraw the signed contract. Such notice of withdrawal shall be effective upon its receipt by the Owner.

12.23 The Owner shall issue the Notice to Proceed after the execution of the contract, approval of bonds and certificate of insurance. If the Notice to Proceed has not been issued within the agreed upon period, the contractor may terminate the contract without further liability on the part of either party.

12.24 The Owner may make such investigations as deemed necessary to determine the ability of the bidder to perform the work, and the bidder shall furnish to the Owner all such information and data for this purpose as the Owner may request. The Owner reserves the right to reject any bid if the evidence submitted by, or investigation of, such bidders fails to satisfy the Owner that

Copyright© 2018 National Society of Professional Engineers, American Council of Engineering Companies, and American Society of Civil Engineers. All rights reserved.

such bidder is properly qualified to carry out the obligations of the contract and to complete the work contemplated therein.

12.25 A conditional or qualified bid will not be accepted. Tied bids are non-restrictive, and in order for a tied bid to be accepted it must be lower than the sum of low separate bids.

12.26 All applicable laws, ordinances, rules and regulations of all authorities having jurisdiction over construction of the project shall apply to the contract throughout. The successful bidder will be required to meet all requirements of the Underground Facilities Damage Prevention Act when engaged in work within public rights-of-way.

12.27 When using alternate bids, they will be listed in numerical order, with the highest priority being number one, the second highest priority being number two, etc. The lowest bidder will be determined by comparing all bids that contain the selected alternates and computing the total value of the base bid plus the alternates.

12.28 All bidders and owners shall comply with the Oklahoma PCBA of 1974.

12.29 The awarded bidder shall supply the names and addresses of all subcontractors and material suppliers when required to do so by the Owner.

12.30 To avoid bypassing of raw sewage during construction, the contractor shall use the methods and/or schedule(s) described these Specifications.

12.31 The Contractor will be required to begin work within 10 calendar days of the date shown on the Notice to Proceed.

12.32 In the event of a conflict between the Specifications and the SRF Supplemental Conditions (ORF-185), the latter will govern. In the event of a conflict between the Plans and the Specifications, the Specifications will govern.

12.33 The following items, included in this Bid Packet, shall be submitted along with the bid: Bid Proposal, Bid Bond, Non-Collusion Affidavit, Business Relationship Affidavit, Contractor's Statement about Equal Opportunity (ORF-211), Contractor's Certificate of Non-Segregated Facilities (ORF-212), Bidder's/Supplier's List (ORF-249), Subcontractor Performance form (ORF-6100-3), Subcontractor Utilization form (ORF-6100-4) and DBE documentation (if applicable).

12.34 The consulting engineer is Wall Engineering, LLC. The consulting engineer's contact person for this project is Brandon Wall, P.E. with phone number (580) 924-1800.

ARTICLE 13—BASIS OF BID

13.01 *Lump Sum*

A. Bidders must submit a Bid on a lump sum basis as set forth in the Bid Form for any items listed as Lump Sum (or "LS") or where no unit price is required to be inputted on the bid Bid Form.

13.02 *Unit Price*

A. Bidders must submit a Bid on a unit price basis for each item of Work listed with a unit price on the Bid Form.

B. The "Bid Price" (sometimes referred to as the extended price) for each unit price Bid item will be the product of the "Estimated Quantity", which Owner or its representative has set forth in the Bid Form, for the item and the corresponding "Bid Unit Price" offered by the

EJCDC® C-200, Instructions to Bidders for Construction Contract.
Copyright© 2018 National Society of Professional Engineers, American Council of Engineering Companies, and American Society of Civil Engineers. All rights reserved.

Bidder. The total of all unit price Bid items will be the sum of these "Bid Prices"; such total will be used by Owner for Bid comparison purposes. The final quantities and Contract Price will be determined in accordance with Paragraph 13.03 of the General Conditions.

C. Discrepancies between the multiplication of units of Work and unit prices will be resolved in favor of the unit prices. Discrepancies between the indicated sum of any column of figures and the correct sum thereof will be resolved in favor of the correct sum.

13.03 *Allowances*

A. For cash allowances the Bid price must include such amounts as the Bidder deems proper for Contractor's overhead, costs, profit, and other expenses on account of cash allowances, if any, named in the Contract Documents, in accordance with Paragraph 13.02.B of the General Conditions.

ARTICLE 14—SUBMITTAL OF BID

14.01 A Bid must be received no later than the date and time prescribed and at the place indicated in the Advertisement or invitation to bid and must be enclosed in a plainly marked package with the Project title, and, if applicable, the designated portion of the Project for which the Bid is submitted, the name and address of Bidder, and must be accompanied by the Bid security and other required documents. If a Bid is sent by mail or other delivery system, the sealed envelope containing the Bid must be enclosed in a separate package plainly marked on the outside with the notation "BID ENCLOSED." A mailed Bid must be addressed to the location designated in the Advertisement.

14.02 Bids received after the date and time prescribed for the opening of bids, or not submitted at the correct location or in the designated manner, will not be accepted and will be returned to the Bidder unopened.

ARTICLE 15—MODIFICATION AND WITHDRAWAL OF BID

15.01 An unopened Bid may be withdrawn by an appropriate document duly executed in the same manner that a Bid must be executed and delivered to the place where Bids are to be submitted prior to the date and time for the opening of Bids. Upon receipt of such notice, the unopened Bid will be returned to the Bidder.

15.02 If a Bidder wishes to modify its Bid prior to Bid opening, Bidder must withdraw its initial Bid in the manner specified in Paragraph 15.01 and submit a new Bid prior to the date and time for the opening of Bids.

15.03 If within 24 hours after Bids are opened any Bidder files a duly signed written notice with Owner and promptly thereafter demonstrates to the reasonable satisfaction of Owner that there was a material and substantial mistake in the preparation of its Bid, the Bidder may withdraw its Bid, and the Bid security will be returned. Thereafter, if the Work is rebid, the Bidder will be disqualified from further bidding on the Work.

ARTICLE 16—OPENING OF BIDS

16.01 Bids will be opened at the time and place indicated in the advertisement or invitation to bid and, unless obviously non-responsive, read aloud publicly. An abstract of the amounts of the

Copyright© 2018 National Society of Professional Engineers, American Council of Engineering Companies, and American Society of Civil Engineers. All rights reserved.

base Bids and major alternates, if any, will be made available to Bidders after the opening of Bids.

ARTICLE 17—BIDS TO REMAIN SUBJECT TO ACCEPTANCE

17.01 All Bids will remain subject to acceptance for the period of time stated in the Bid Form, but Owner may, in its sole discretion, release any Bid and return the Bid security prior to the end of this period.

ARTICLE 18—EVALUATION OF BIDS AND AWARD OF CONTRACT

18.01 Owner reserves the right to reject any or all Bids, including without limitation, nonconforming, nonresponsive, unbalanced, or conditional Bids. Owner also reserves the right to waive all minor Bid informalities not involving price, time, or changes in the Work.

18.02 Owner will reject the Bid of any Bidder that Owner finds, after reasonable inquiry and evaluation, to not be responsible.

18.03 If Bidder purports to add terms or conditions to its Bid, takes exception to any provision of the Bidding Documents, or attempts to alter the contents of the Contract Documents for purposes of the Bid, whether in the Bid itself or in a separate communication to Owner or Engineer, then Owner will reject the Bid as nonresponsive.

18.04 If Owner awards the contract for the Work, such award will be to the responsible Bidder submitting the lowest responsive Bid.

18.05 *Evaluation of Bids*

A. In evaluating Bids, Owner will consider whether the Bids comply with the prescribed requirements, and such alternates, unit prices, and other data, as may be requested in the Bid Form or prior to the Notice of Award.

B. In the comparison of Bids, alternates will be applied in the same order of priority as listed in the Bid Form. To determine the Bid prices for purposes of comparison, Owner will announce to all bidders a "Base Bid plus alternates" budget after receiving all Bids, but prior to opening them. For comparison purposes alternates will be accepted, following the order of priority established in the Bid Form, until doing so would cause the budget to be exceeded. After determination of the Successful Bidder based on this comparative process and on the responsiveness, responsibility, and other factors set forth in these Instructions, the award may be made to said Successful Bidder on its base Bid and any combination of its additive alternate Bids for which Owner determines funds will be available at the time of award.

C. For determination of the apparent low Bidder(s) when sectional bids are submitted, Bids will be compared on the basis of the aggregate of the Bids for separate sections and the Bids for combined sections that result in the lowest total amount for all of the Work.

D. For the determination of the apparent low Bidder when unit price bids are submitted, Bids will be compared on the basis of the total of the products of the estimated quantity of each item and unit price Bid for that item, together with any lump sum items.

18.06 In evaluating whether a Bidder is responsible, Owner will consider the qualifications of the Bidder and may consider the qualifications and experience of Subcontractors and Suppliers

EJCDC® C-200, Instructions to Bidders for Construction Contract.
Copyright© 2018 National Society of Professional Engineers, American Council of Engineering Companies, and American Society of Civil Engineers. All rights reserved.

proposed for those portions of the Work for which the identity of Subcontractors and Suppliers must be submitted as provided in the Bidding Documents.

18.07 Owner may conduct such investigations as Owner deems necessary to establish the responsibility, qualifications, and financial ability of Bidders and any proposed Subcontractors or Suppliers.

ARTICLE 19—SIGNING OF AGREEMENT

19.01 When Owner issues a Notice of Award to the Successful Bidder, it will be accompanied by the unexecuted counterparts of the Agreement along with the other Contract Documents as identified in the Agreement. Within 15 days thereafter, Successful Bidder must execute and deliver the required number of counterparts of the Agreement and any bonds and insurance documentation required to be delivered by the Contract Documents to Owner. Within 30 days thereafter, Owner will deliver one fully executed counterpart of the Agreement to Successful Bidder, together with printed and electronic copies of the Contract Documents as stated in Paragraph 2.02 of the General Conditions.

ARTICLE 20—SALES AND USE TAXES

20.01 Owner is not exempt from Oklahoma state sales and use taxes on materials and equipment to be incorporated in the Work. Said taxes must be included in the Bid.

ARTICLE 21—WAGE RATE REQUIREMENTS & OTHER PROVISIONS

21.01 This project is to be financed by a CWSRF loan from the Oklahoma Water Resources Board (OWRB) and shall be referred to as Project No. ORF-20-0018-CWA. The following requirements and regulations must be complied with:

A. "Equal Opportunity in Employment: All qualified applicants will receive considerations for employment without regard to race, color, religion, sex, national origin, age or physical handicap. Bidders on this work will be required to comply with the President's Executive Order No. 11246, as amended."

B. "Each bidder must fully comply with the requirements, terms and conditions of the Environmental Protection Agency’s Disadvantaged Business Enterprise Requirements including employing the six (6) good faith efforts and soliciting disadvantaged business enterprises during the performance of this contract. The bidder commits itself to following the good faith efforts to solicit disadvantaged business enterprises contained herein and all other requirements, terms and conditions of these bid conditions by submitting a properly signed bid. Requirements are contained in OWRB’s Guidance and Procedures, ORF-267."

C. Davis Bacon Act prevailing wage rate requirements shall apply. All laborers and mechanics employed by contractors and sub contractors on projects funded directly by or assisted in whole or in part by and through the Federal Government shall be paid wages at rates not less than those prevailing on projects of a character similar in the locality as determined by the Secretary of Labor in accordance with subchapter IV of Chapter 31 of Title 40, United States Code. The Department of Labor provides all pertinent information related to compliance with labor standards, including prevailing wage rates and instructions for reporting. For more information please refer to http://www.wdol.gov/.

EJCDC® C-200, Instructions to Bidders for Construction Contract.
Copyright© 2018 National Society of Professional Engineers, American Council of Engineering Companies, and American Society of Civil Engineers. All rights reserved.

D. American Iron and Steel provisions (Buy American Requirements) also apply to projects funded directly by or assisted in whole or in part by and through the Federal Government pursuant to P.L. 113-76, Consolidated Appropriations Act, 2014, Sec. 436 requires that "None of the funds made available by a State water pollution control revolving fund as authorized by title VI of the Federal Water Pollution Control Act (33 U.S.C. 1381 et seq.) or made available by a drinking water treatment revolving loan fund as authorized by section 1452 of the Safe Drinking Water Act (42 U.S.C. 300j-12) shall be used for a project for the construction, alteration, maintenance, or repair of a public water system or treatment works unless all of the iron and steel products used in the project are produced in the United States." For more information please refer to Oklahoma Water Resources Board Supplemental Conditions ORF- 185.

E. System for Award Management (SAM) registration is required for all SRF programs (CWSRF and DWSRF) applicants and Awardees (Entities, Prime Contractors, Subcontractors, Vendors) in order to be awarded contracts by the SRF Programs. SAM replaces Central Contractor Registration/Federal Agency Registration, Online Representations and Certifications Application, and Excluded Parties List System. Applicants and awardees are required to complete a one-time free registration to provide basic information relevant to procurement and financial transactions. Registrants must retain an active status to be eligible for SRF projects. New Applicants and Awardees can go to SAM.gov to complete the registration process.

Note: In order to register in SAM, a Data Universal Number System (DUNS) number will be required. DUNS number is a unique, non-indicative 9-digit identifier issued and maintained by Dun & Bradstreet (D&B) that verifies the existence of a business entity globally. D&B assigns DUNS numbers for each physical location of a business. All entities doing business with the U.S Government can receive a DUNS number FREE of charge and, under normal circumstances, within 1-2 business days when using D&B web form process at http://fedgov.dnb.com/webform.

21.02 In the event of a conflict between the specifications and the SRF Supplemental Conditions, the later shall govern.

21.03 In the event of a conflict between the plans and specifications, the specs will govern.

21.04 The following items **MUST** be submitted with the bid to be considered responsive:

~~A. Qualifications Statement~~

B. Bid Form

C. Bid Proposal

D. Bid Bond

E. Business Relationships Affidavit

F. Noncollusion Affidavit

G. Payroll Affadavit

H. EPA DBE Form 6100-2

I. EPA DBE Form 6100-3

J. EPA DBE Form 6100-4

EJCDC® C-200, Instructions to Bidders for Construction Contract.
Copyright© 2018 National Society of Professional Engineers, American Council of Engineering Companies, and American Society of Civil Engineers. All rights reserved.

K. American Iron & Steel Certification

L. Equal Opportunity Certification

M. Non-Segregated Certification

N. Debarment Certification

21.05 All applicable laws, ordinances, and the rules and regulations of all authorities having jurisdiction over construction of the project shall apply to the contract throughout.

21.06 Each Bidder is responsible for inspecting the site and for reading and being thoroughly familiar with the Contract Documents. The failure or omission of any Bidder to do any of the foregoing shall in no way relieve any Bidder from any obligation in respect to its Bid.

21.07 The successful bidder will be required to meet all requirements of the Underground Facilities Damage Prevention Act when engaged in work within public rights-of-way.

21.08 When alternate Bids are taken, they will be listed in numerical order with the highest priority being number one, the second number two, etc.

21.09 When alternates are used, the low Bidders will be selected by the lowest and best Bid considering all Bids which include the selected alternate Bids.

21.10 The alternates will be listed in consecutive priority order to remain within the funds available for the project.

21.11 The low Bidder shall supply the names and addresses of major material suppliers

21.12 The Contractor shall avoid the bypassing of raw sewage during construction

EJCDC® C-200, Instructions to Bidders for Construction Contract.
Copyright© 2018 National Society of Professional Engineers, American Council of Engineering Companies, and American Society of Civil Engineers. All rights reserved.

BID FORM

The terms used in this Bid with initial capital letters have the meanings stated in the Instructions to Bidders, the General Conditions, and the Supplementary Conditions.

ARTICLE 1—OWNER AND BIDDER

1.01 This Bid is submitted to: **Shawnee Municipal Authority**

1.02 The undersigned Bidder proposes and agrees, if this Bid is accepted, to enter into an Agreement with Owner in the form included in the Bidding Documents to perform all Work as specified or indicated in the Bidding Documents for the prices and within the times indicated in this Bid and in accordance with the other terms and conditions of the Bidding Documents.

ARTICLE 2—BIDDER'S ACKNOWLEDGEMENTS

2.01 Bidder accepts all of the terms and conditions of the Instructions to Bidders, including without limitation those dealing with the disposition of Bid security. This Bid will remain subject to acceptance for 60 days after the Bid opening, or for such longer period of time that Bidder may agree to in writing upon request of Owner.

2.02 Davis Bacon Act prevailing wage rate requirements shall apply. All laborers and mechanics employed by contractors and sub contractors on projects funded directly by or assisted in whole or in part by and through the Federal Government shall be paid wages at rates not less than those prevailing on projects of a character similar in the locality as determined by the Secretary of Labor in accordance with subchapter IV of Chapter 31 of Title 40, United States Code. The Department of Labor provides all pertinent information related to compliance with labor standards, including prevailing wage rates and instructions for reporting. For more information please refer to http://www.wdol.gov/.

2.03 American Iron and Steel provisions (Buy American Requirements) also apply to projects funded directly by or assisted in whole or in part by and through the Federal Government pursuant to P.L. 113-76, Consolidated Appropriations Act, 2014, Sec. 436 requires that "None of the funds made available by a State water pollution control revolving fund as authorized by title VI of the Federal Water Pollution Control Act (33 U.S.C. 1381 et seq.) or made available by a drinking water treatment revolving loan fund as authorized by section 1452 of the Safe Drinking Water Act (42 U.S.C. 300j-12) shall be used for a project for the construction, alteration, maintenance, or repair of a public water system or treatment works unless all of the iron and steel products used in the project are produced in the United States." For more information please refer to Oklahoma Water Resources Board Supplemental Conditions ORF- 185.

2.04 System for Award Management (SAM) registration is required for all SRF programs (CWSRF and DWSRF) applicants and Awardees (Entities, Prime Contractors, Subcontractors, Vendors) in order to be awarded contracts by the SRF Programs. SAM replaces Central Contractor Registration/Federal Agency Registration, Online Representations and Certifications Application, and Excluded Parties List System. Applicants and awardees are required to complete a one-time free registration to provide basic information relevant to procurement and financial transactions.

EJCDC® C-410, Bid Form for Construction Contract.
Copyright© 2018 National Society of Professional Engineers, American Council of Engineering Companies, and American Society of Civil Engineers. All rights reserved.

Registrants must retain an active status to be eligible for SRF projects. New Applicants and Awardees can go to SAM.gov to complete the registration process.

2.05 Note: In order to register in SAM, a Data Universal Number System (DUNS) number will be required. DUNS number is a unique, non-indicative 9-digit identifier issued and maintained by Dun & Bradstreet (D&B) that verifies the existence of a business entity globally. D&B assigns DUNS numbers for each physical location of a business. All entities doing business with the U.S Government can receive a DUNS number FREE of charge and, under normal circumstances, within 1-2 business days when using D&B web form process at http://fedgov.dnb.com/webform.

ARTICLE 3—ATTACHMENTS TO THIS BID

3.01 The following documents are submitted with and made a condition of this Bid:

A. Required Bid security;

~~B. List of Proposed Subcontractors;~~

C. Attachment "A" – Bid Summary Sheet

D. List of Proposed Subcontractors (submitted by apparent low bidder within 24 hours);

E. List of Proposed Manufactures (submitted by apparent low bidder within 24 hours);

~~F. Evidence of authority to do business in the state of the Project; or a written covenant to obtain such authority within the time for acceptance of Bids (if required by State);~~

~~G. Contractor's license number as evidence of Bidder's State Contractor's License or a covenant by Bidder to obtain said license within the time for acceptance of Bids (if required by State);~~

~~H. Required Bidder Qualification Statement with supporting data;~~

I. Non-Collusion Affidavit

J. Business Relationship Affidavit

K. Bidder's Statements

L. American Iron & Steel Certification

M. EPA 6100-3

N. EPA 6100-4

ARTICLE 4—BASIS OF BID

4.01 *Lump Sum Bids*

A. Bidder will complete the Work in accordance with the Contract Documents for the following lump sum (stipulated) price(s), together with any Unit Prices in accordance with "Attachment A – Bid Summary Sheet:"

B. Bidder acknowledges that:

1. Each Bid Unit Price includes an amount considered by Bidder to be adequate to cover Contractor's overhead and profit for each separately identified item, and

EJCDC® C-410, Bid Form for Construction Contract.
Copyright© 2018 National Society of Professional Engineers, American Council of Engineering Companies, and American Society of Civil Engineers. All rights reserved.

2. Estimated quantities are not guaranteed, and are solely for the purpose of comparison of Bids, and final payment for all Unit Price Work will be based on actual quantities, determined as provided in the Contract Documents.

ARTICLE 5—TIME OF COMPLETION

5.01 Bidder agrees that the Work will be substantially complete and will be completed and ready for final payment in accordance with Paragraph 15.06 of the General Conditions on or before the dates or within the number of calendar days indicated in the Agreement.

5.02 Bidder accepts the provisions of the Agreement as to liquidated damages.

ARTICLE 6—BIDDER'S ACKNOWLEDGEMENTS: ACCEPTANCE PERIOD, INSTRUCTIONS, AND RECEIPT OF ADDENDA

6.01 *Bid Acceptance Period*

A. This Bid will remain subject to acceptance for 60 days after the Bid opening, or for such longer period of time that Bidder may agree to in writing upon request of Owner.

6.02 *Instructions to Bidders*

A. Bidder accepts all of the terms and conditions of the Instructions to Bidders, including without limitation those dealing with the disposition of Bid security.

6.03 *Receipt of Addenda*

A. Bidder hereby acknowledges receipt of the following Addenda: **[Add rows as needed or attach separate pages.]**

Addendum Number	Addendum Date

ARTICLE 7—BIDDER'S REPRESENTATIONS AND CERTIFICATIONS

7.01 *Bidder's Representations*

A. In submitting this Bid, Bidder represents the following:

1. Bidder has examined and carefully studied the Bidding Documents, including Addenda.

2. Bidder has visited the Site, conducted a thorough visual examination of the Site and adjacent areas, and become familiar with the general, local, and Site conditions that may affect cost, progress, and performance of the Work.

3. Bidder is familiar with all Laws and Regulations that may affect cost, progress, and performance of the Work, including all American Iron and Steel requirements.

EJCDC® C-410, Bid Form for Construction Contract.
Copyright© 2018 National Society of Professional Engineers, American Council of Engineering Companies, and American Society of Civil Engineers. All rights reserved.

4. Bidder has carefully studied the reports of explorations and tests of subsurface conditions at or adjacent to the Site and the drawings of physical conditions relating to existing surface or subsurface structures at the Site that have been identified in the Supplementary Conditions, with respect to the Technical Data in such reports and drawings.

5. Bidder has carefully studied the reports and drawings relating to Hazardous Environmental Conditions, if any, at or adjacent to the Site that have been identified in the Supplementary Conditions, with respect to Technical Data in such reports and drawings.

6. Bidder has considered the information known to Bidder itself; information commonly known to contractors doing business in the locality of the Site; information and observations obtained from visits to the Site; the Bidding Documents; and the Technical Data identified in the Supplementary Conditions or by definition, with respect to the effect of such information, observations, and Technical Data on (a) the cost, progress, and performance of the Work; (b) the means, methods, techniques, sequences, and procedures of construction to be employed by Bidder, if selected as Contractor; and (c) Bidder's (Contractor's) safety precautions and programs.

7. Based on the information and observations referred to in the preceding paragraph, Bidder agrees that no further examinations, investigations, explorations, tests, studies, or data are necessary for the performance of the Work at the Contract Price, within the Contract Times, and in accordance with the other terms and conditions of the Contract.

8. Bidder is aware of the general nature of work to be performed by Owner and others at the Site that relates to the Work as indicated in the Bidding Documents.

9. Bidder has given Engineer written notice of all conflicts, errors, ambiguities, or discrepancies that Bidder has discovered in the Bidding Documents, and of discrepancies between Site conditions and the Contract Documents, and the written resolution thereof by Engineer is acceptable to Contractor.

10. The Bidding Documents are generally sufficient to indicate and convey understanding of all terms and conditions for performance and furnishing of the Work.

11. The submission of this Bid constitutes an incontrovertible representation by Bidder that without exception the Bid and all prices in the Bid are premised upon performing and furnishing the Work required by the Bidding Documents.

7.02 *Bidder's Certifications*

A. The Bidder certifies the following:

1. This Bid is genuine and not made in the interest of or on behalf of any undisclosed individual or entity and is not submitted in conformity with any collusive agreement or rules of any group, association, organization, or corporation.

2. Bidder has not directly or indirectly induced or solicited any other Bidder to submit a false or sham Bid.

3. Bidder has not solicited or induced any individual or entity to refrain from bidding.

4. Bidder has not engaged in corrupt, fraudulent, collusive, or coercive practices in competing for the Contract. For the purposes of this Paragraph 8.02.A:

Copyright© 2018 National Society of Professional Engineers, American Council of Engineering Companies, and American Society of Civil Engineers. All rights reserved.

a. Corrupt practice means the offering, giving, receiving, or soliciting of anything of value likely to influence the action of a public official in the bidding process.

b. Fraudulent practice means an intentional misrepresentation of facts made (a) to influence the bidding process to the detriment of Owner, (b) to establish bid prices at artificial non-competitive levels, or (c) to deprive Owner of the benefits of free and open competition.

c. Collusive practice means a scheme or arrangement between two or more Bidders, with or without the knowledge of Owner, a purpose of which is to establish bid prices at artificial, non-competitive levels.

d. Coercive practice means harming or threatening to harm, directly or indirectly, persons or their property to influence their participation in the bidding process or affect the execution of the Contract.

EJCDC® C-410, Bid Form for Construction Contract.
Copyright© 2018 National Society of Professional Engineers, American Council of Engineering Companies, and American Society of Civil Engineers. All rights reserved.

BIDDER hereby submits this Bid as set forth above:

Bidder:

_____
(typed or printed name of organization)

By: _____
(individual's signature)

Name: _____
(typed or printed)

Title: _____
(typed or printed)

Date: _____
(typed or printed)

If Bidder is a corporation, a partnership, or a joint venture, attach evidence of authority to sign.

Attest: _____
(individual's signature)

Name: _____
(typed or printed)

Title: _____
(typed or printed)

Date: _____
(typed or printed)

Address for giving notices:

_____

_____

Bidder's Contact:

Name: _____
(typed or printed)

Title: _____
(typed or printed)

Phone: _____

Email: _____

Address:

_____

_____

_____

Bidder's Contractor License No.: (if applicable) _____

EJCDC® C-410, Bid Form for Construction Contract.
Copyright© 2018 National Society of Professional Engineers, American Council of Engineering Companies, and American Society of Civil Engineers. All rights reserved.

BID FORM SECTION 5.01 - BID PROPOSAL - ATTACHMENT "A" SUMMARY OF BID PRICING (ALL BLANKS MUST BE FILLED)	
SECTION	**BID PRICE**
GENERAL BID ITEMS	
NORTHSIDE	
COLLECTION SYSTEM LIFT STATIONS	
SOUTHSIDE	
CONVEYANCE	
TOTAL PROJECT BID PRICE	

I, General Contractor, do hereby certify that the above TOTAL BID PRICE stated above constitutes all labor, equipment and materials for a complete and operable system as defined by the Contract Documents. Additionally, I certify that any items not specifically outined have been included in the most applicable item, that no items are outstanding that would require an addition to the stated TOTAL BID PRICE, and that TOTAL BID PRICE is not conditional in any manner and constitutes the Lump Sum for completion of work for a complete and operable system as defined by the Contract Documents.

BY:_____ TITLE_____ DATE:_____

BID FORM SECTION 5.01 - BID SUMMARY SHEET - ATTACHMENT "A" GENERAL ITEMS APPLYING TO NORTHSIDE, SOUTHSIDE & CONVEYANCE					
#	**Bid Item, Complete per Plans & Specifications**	**Unit**	**Quantity**	**Cost/Unit**	**Total Cost**
1	SWPPP & Erosion Control	LSUM	1		
2	Mobilization, Demobilization, Bonds & Insurance	LSUM	1		
3	Construction Staking	LSUM	1		
4	Construction Traffic Control	LSUM	1		
5	Trench Safety System	LSUM	1		
6	Materials Testing & Disinfection	LSUM	1		
7	CCTV Security System	LSUM	1		
8	Waste Sludge Handling & Disposal from Existing Treatment Units Prior to Final Demolition (Northisde & Southside)	CY	16000		
9	Hydroexcavation for Utilities Location	LF	7500		
10	Work Change Directives	ALW	N/A	N/A	$523,525.00
11	New Electrical Service Extension & Transformer	ALW	N/A	N/A	$165,800.00
12	Lab Equipment	ALW	N/A	N/A	$87,830.00
13	Furniture, Fixtures & Equipment	ALW	N/A	N/A	$186,870.00
14	Rock Removal	ALW	N/A	N/A	$240,975.00
				SUBTOTAL - GENERAL ITEMS	

BID FORM SECTION 5.01 - BID PROPOSAL - ATTACHMENT "A" NORTHSIDE					
#	**Bid Item, Complete per Plans & Specifications**	**Unit**	**Quantity**	**Cost/Unit**	**Total Cost**
15	Headworks	1	LSUM		
16	Influent Lift Station including Flow Meter Structure	1	LSUM		
17	Headworks & Influent Lift Station Cover & Bridge Crane	1	LSUM		
18	SBR Pre-Equalization Basin	1	LSUM		
19	SBR Flow Control Structure including SBR Transfer Pumps	1	LSUM		
20	Sequencing Batch Reactor System (SBR)	1	LSUM		
21	SBR Post-Equalization Basin	1	LSUM		
22	UV Disinfection & Non-Potable Water System with Building	1	LSUM		
23	Flow Measurement - Parshall Flume	1	LSUM		
24	Effluent Lift Station w/ Cascade Aeration	1	LSUM		
25	Effluent Lift Station Cover & Hoist	1	LSUM		
26	Effluent Lift Station Flow Meter Stucture	1	LSUM		
27	Waste Sludge Pump Station (WAS)	1	LSUM		
28	Aerobic Digester (AD)	1	LSUM		
29	SBR/AD Blowers	1	LSUM		
30	SBR/AD Blower Building	1	LSUM		
31	Belt Filter Press & Sludge Loading with Building	1	LSUM		
32	Wet Weather Flow Equalization Basin (FEB)	1	LSUM		

BID FORM SECTION 5.01 - BID PROPOSAL - ATTACHMENT "A" NORTHSIDE					
#	**Bid Item, Complete per Plans & Specifications**	**Unit**	**Quantity**	**Cost/Unit**	**Total Cost**
33	FEB Return Lift Station	1	LSUM		
34	FEB Return Lift Station Flow Meter Stucture	1	LSUM		
35	Administration/Lab/Electrical Building	1	LSUM		
36	Yard Piping	1	LSUM		
37	Controls & Instrumentation including SCADA	1	LSUM		
38	Electrical	1	LSUM		
39	Standby Power Generator w/ ATS (15 KW)	1	LSUM		
40	Standby Power Generator w/ ATS (1750 KW)	1	LSUM		
41	Site Grading & Drainage	1	LSUM		
42	Site Concrete Paving	1	LSUM		
43	Security fencing, Gates & Signs	1	LSUM		
44	Landscaping	1	LSUM		
45	Demolition (Initial) including Sludge Disposal	1	LSUM		
46	Demolition (Final) NOT inlcuding Sludge Disposal	1	LSUM		
				SUBTOTAL - NORTHSIDE	

BID FORM SECTION 5.01 - BID PROPOSAL - ATTACHMENT "A" COLLECTION SYSTEM LIFT STATIONS					
#	**Bid Item, Complete per Plans & Specifications**	**Unit**	**Quantity**	**Cost/Unit**	**Total Cost**
47	Collection System Lift Station Controls & SCADA	1	LSUM		
SUBTOTAL - COLLECTION SYSTEM LIFT STATIONS					

BID FORM SECTION 5.01 - BID PROPOSAL - ATTACHMENT "A" SOUTHSIDE					
#	**Bid Item, Complete per Plans & Specifications**	**Unit**	**Quantity**	**Cost/Unit**	**Total Cost**
48	Headworks	1	LSUM		
49	Headworks Cover & Hoist	1	LSUM		
50	Influent Lift Station	1	LSUM		
51	Flow Meter Structure	1	LSUM		
52	Primary FEB Including Concrete Lining	1	LSUM		
53	FEB Return Lift Station	1	LSUM		
54	FEB Return Lift Station Flow Meter Stucture	1	LSUM		
55	Secondary FEB Including Concrete Lining & Sludge Disposal	1	LSUM		
56	Yard Piping	1	LSUM		
57	Backflow Preventer w/ Enclosure	1	LSUM		
58	Controls & Instrumentation including SCADA	1	LSUM		
59	Electrical	1	LSUM		
60	Electrical/Controls Buidling	1	LSUM		
61	Standby Power Generator w/ ATS (600 KW)	1	LSUM		
62	Site Grading & Drainage	1	LSUM		
63	Site Concrete Paving	1	LSUM		
64	Site Gravel Surface	1	LSUM		
65	Landscaping	1	LSUM		

BID FORM SECTION 5.01 - BID PROPOSAL - ATTACHMENT "A" SOUTHSIDE					
#	**Bid Item, Complete per Plans & Specifications**	**Unit**	**Quantity**	**Cost/Unit**	**Total Cost**
66	Demolition (Initial) including Sludge Disposal	1	LSUM		
67	Demolition (Final) NOT inlcuding Sludge Disposal	1	LSUM		
				SUBTOTAL - SOUTHSIDE	

BID FORM SECTION 5.01 - BID PROPOSAL - ATTACHMENT "A" CONVEYANCE					
#	**Bid Item, Complete per Plans & Specifications**	**Unit**	**Quantity**	**Cost/Unit**	**Total Cost**
68	Sewermain Restoration (See 01_29_00)	1	LSUM		
69	Site Preparation (See 01_29_00)	1	LSUM		
70	Special Survey for Easement Staking (See 01_29_00)	1	LSUM		
71	SUE Subsurface Utility Engineering (See 02_21_20)	1	LSUM		
72	24" DR11 HDPE Forcemain (Direct Bury)	1	LSUM		
73	24" DR11 HDPE Forcemain (Bore, No Encasement)	1	LSUM		
74	24" DR11 HDPE Forcemain (Bore, HDPE Encasement)	1	LSUM		
75	24" DR11 HDPE Forcemain (Bore, Steel Encasement)	1	LSUM		
76	Combination Air/Vac Valve in Vault (24")	1	LSUM		
77	Combination Air/Vac Valve in Vault (30")	1	LSUM		
78	30" DR11 HDPE Forcemain (Direct Bury)	1	LSUM		
79	30" DR11 HDPE Forcemain (Bore, No Encasement)	1	LSUM		
80	Connect 30" HDPE to Existing 24" Ductile Iron Sewermain	1	LSUM		
				SUBTOTAL - CONVEYANCE	

Spec Section	Equipment	Manufacturer / Supplier
41_21_23.15	Belt Conveyor System	
41_22_00	Cranes & Hoists	
41_22_27	Monorail & Hoists	
43_11_16	High Efficiency Blower Packages	
43_23_31.35	Non-Potable Water Pumps	
43_23_58.03	Positive Displacement Rotary Lobe Pumps	
43_25_13.13	Submersible Pump System	
46_07_54	Waste Activated Sludge Pump Station	
46_21_53	Perforated Fine Screen	
46_21_73.13	Screw Washer Compactor	
46_23_24	Grit Removal, Washing & Dewatering	
46_33_33	Polymer Blending & Feed Equipment	
46_41_23	Submersible Mixers	
46_51_55	Low Profile Cascade Aerator	
46_53_57	SBR & Aerobic Digester	
46_66_57	UV Disinfection Equipment	
46_76_21.03	Belt Filter Press System	
41_22_00	Cranes & Hoists	
28_21_01	CCTV	
32_31_13	Fencing	
40_05_33	HDPE	
40_05_19.20	Ductile Iron Piping	

Work Provided	Subcontractor
Excavation / Grading	
Aggregate Base / Gravel Surfacing	
Concrete	
Electrical	
Mechanical	
Plumbing	
Painting	
Masonry	
Metal Building	
Treatment Plant Piping	
Hydromulch / Sodding	
System Integrator	
Cranes/Hoists	
CCTV	
Fencing	
HDPE	
Subsurface Utility Engineering	
Survey	
Testing	
Demolition	

SPECIAL MATERIALS COST INCREASES

If it is anticipated that any special non-standard materials cost increases will occur during the project or after the bid is submitted, the Contractor shall submit below a detailed listing of potential impacted vendors. Contractor shall additionally submit for each vendor listed a detailed accounting of price bid and statement from vendor outlining the reason(s) it wasn't possible to lock in pricing on the items for the project duration at the time of bid. Any items not listed will constitute certification by the contractor that firm and fixed pricing has been established for any/all items not specifically listed.

An items listed by the apparent low bidder as potentially being subject to price increases that is not listed by second / subsequent bidders may be cause for the Owner to award to a second / subsequent bidder as the "best" bid.

List of Potential Impacted Vendors w/ Attachments

1. _____
2. _____
3. _____
4. _____
5. _____
6. _____
7. _____
8. _____
9. _____
10. _____

Seal (if incorporated)

Bidder Name: _____

Contact Name: _____

Title: _____

Contact Number: _____

Contact Email: _____

Signature of Authorized Agent for Bidder: _____

Date: _____

BID BOND (PENAL SUM FORM)

Bidder	**Surety**
Name:	Name:
Address *(principal place of business)*:	Address *(principal place of business)*:
Owner	**Bid**
Name: **Shawnee Municipal Authority**	Project *(name and location)*: **Wastewater System Improvements - Shawnee, OK**
Address *(principal place of business)*: **16 West 9th Street, Shawnee, OK 74801-6812**	Bid Due Date: **August 1, 2022**
Bond	
Penal Sum:	
Date of Bond:	

Surety and Bidder, intending to be legally bound hereby, subject to the terms set forth in this Bid Bond, do each cause this Bid Bond to be duly executed by an authorized officer, agent, or representative.

Bidder	Surety
_____ *(Full formal name of Bidder)*	_____ *(Full formal name of Surety) (corporate seal)*
By: _____ *(Signature)*	By: _____ *(Signature) (Attach Power of Attorney)*
Name: _____ *(Printed or typed)*	Name: _____ *(Printed or typed)*
Title: _____	Title: _____
Attest: _____ *(Signature)*	Attest: _____ *(Signature)*
Name: _____ *(Printed or typed)*	Name: _____ *(Printed or typed)*
Title:	Title:

Notes: (1) Note: Addresses are to be used for giving any required notice. (2) Provide execution by any additional parties, such as joint venturers, if necessary. (3) Surety companies executing bonds must appear on the Treasury Department's most current list (Circular 570 as amended) and be authorized to transact business in the State of Oklahoma. Attach a certified Copy of the Power of Attorney

EJCDC® C-430, Bid Bond (Penal Sum Form).
Copyright© 2018 National Society of Professional Engineers, American Council of Engineering Companies, and American Society of Civil Engineers. All rights reserved.

1. Bidder and Surety, jointly and severally, bind themselves, their heirs, executors, administrators, successors, and assigns to pay to Owner upon default of Bidder the penal sum set forth on the face of this Bond. Payment of the penal sum is the extent of Bidder's and Surety's liability. Recovery of such penal sum under the terms of this Bond will be Owner's sole and exclusive remedy upon default of Bidder.
2. Default of Bidder occurs upon the failure of Bidder to deliver within the time required by the Bidding Documents (or any extension thereof agreed to in writing by Owner) the executed Agreement required by the Bidding Documents and any performance and payment bonds required by the Bidding Documents.
3. This obligation will be null and void if:
   3.1. Owner accepts Bidder's Bid and Bidder delivers within the time required by the Bidding Documents (or any extension thereof agreed to in writing by Owner) the executed Agreement required by the Bidding Documents and any performance and payment bonds required by the Bidding Documents, or
   3.2. All Bids are rejected by Owner, or
   3.3. Owner fails to issue a Notice of Award to Bidder within the time specified in the Bidding Documents (or any extension thereof agreed to in writing by Bidder and, if applicable, consented to by Surety when required by Paragraph 5 hereof).
4. Payment under this Bond will be due and payable upon default of Bidder and within 30 calendar days after receipt by Bidder and Surety of written notice of default from Owner, which notice will be given with reasonable promptness, identifying this Bond and the Project and including a statement of the amount due.
5. Surety waives notice of any and all defenses based on or arising out of any time extension to issue Notice of Award agreed to in writing by Owner and Bidder, provided that the total time for issuing Notice of Award including extensions does not in the aggregate exceed 120 days from the Bid due date without Surety's written consent.
6. No suit or action will be commenced under this Bond prior to 30 calendar days after the notice of default required in Paragraph 4 above is received by Bidder and Surety, and in no case later than one year after the Bid due date.
7. Any suit or action under this Bond will be commenced only in a court of competent jurisdiction located in the state in which the Project is located.
8. Notices required hereunder must be in writing and sent to Bidder and Surety at their respective addresses shown on the face of this Bond. Such notices may be sent by personal delivery, commercial courier, or by United States Postal Service registered or certified mail, return receipt requested, postage pre-paid, and will be deemed to be effective upon receipt by the party concerned.
9. Surety shall cause to be attached to this Bond a current and effective Power of Attorney evidencing the authority of the officer, agent, or representative who executed this Bond on behalf of Surety to execute, seal, and deliver such Bond and bind the Surety thereby.
10. This Bond is intended to conform to all applicable statutory requirements. Any applicable requirement of any applicable statute that has been omitted from this Bond will be deemed to be included herein as if set forth at length. If any provision of this Bond conflicts with any applicable statute, then the provision of said statute governs and the remainder of this Bond that is not in conflict therewith continues in full force and effect.
11. The term "Bid" as used herein includes a Bid, offer, or proposal as applicable.

EJCDC® C-430, Bid Bond (Penal Sum Form).
Copyright© 2018 National Society of Professional Engineers, American Council of Engineering Companies, and American Society of Civil Engineers. All rights reserved.

NONCOLLUSION AFFIDAVIT

STATE OF _____) ss.
COUNTY OF _____)

_____, of lawful age, being first duly sworn, on oath says that (s)he is the agent authorized by the bidder to submit the attached bid. Affiant further states that the bidder has not been a party to any collusion among bidders in restraint of freedom of competition by agreement to bid at a fixed price or to refrain from bidding; or with any government official or employee as to quantity, quality, or price in the prospective contract, or any other terms of said prospective contract; or in any discussions between bidders and any government official concerning exchange of money or other value for special consideration in the letting of a contract; that the bidder/contractor had not paid, given or donated or agreed to pay, give or donate to any officer or employee of the (or other entity) any money or other thing of value, either directly or indirectly in the procurement of a contract or pursuant to this bid.

_____

Subscribed and sworn to before me this _____ day of _____,20___.

_____
Notary Public

My Commission Expires:

BUSINESS RELATIONSHIPS AFFIDAVIT

STATE OF _____) ss.

COUNTY OF _____)

_____, of lawful age, being first duly sworn, on oath says that (s)he is the agent authorized by the bidder to submit the attached bid. Affiant further states that the nature of any partnership, joint venture, or other business relationship presently in effect or which existed within one (1) year prior to the date of this statement with the architect, engineer, or other party to the project is as follows:

_____

_____

Affiant further states that any such business relationship presently in effect or which existed within one (1) year prior to the date of this statement between any officer or director of the bidding company and any officer or director of the architectural or engineering firm or other party to the project is as follows:

_____

_____

Affiant further states that the names of all persons having any such business relationships and the positions they hold with their respective companies or firms are as follows:

_____

_____

(If none of the business relationships herein above mentioned exists, affiant should so state.)

_____

Affiant's Signature:

Subscribed and sworn to before me this _____ day of _____,20__.

_____
Notary Public

My Commission Expires:

_____

PAYROLL AFFIDAVIT

_____, of lawful age, being first duly sworn, on oath says that (s)he is the agent authorized by the bidder to submit the attached bid. Affiant further states that (s)he has submitted or will submit the required payroll information to the Wage and Hour Division of the Employment Standards Administration of the United States Department of Labor. Affiant further states that (s)he is in compliance with the requirements of Title 40 O.S. 1981, Paragraph 196.9a(B), as amended.

_____
Affiant Signature

_____
Type or Printed Name

_____
Title

Subscribed and sworn to before me this_____day of_____, 20_____.

Place Seal Here

_____
Notary Public

My Commission Expires:_____

Note: This form is to be submitted with the bid.

ORF-074 (rev. 4/30/20)

CERTIFICATE OF LABOR STANDARDS COMPLIANCE

I certify that all the Davis Bacon Act and Labor Standards Contract Provisions of the specifications have been complied with during construction of the below-referenced project funded through the Clean Water State Revolving Fund Project Number ORF-20-0018-CWA.

Project Description:

Signature of Authorized Representative

Date

Disadvantaged Business Enterprise Program (DBE) Guidance

Important note: All OWRB and EPA forms can be found at www.owrb.ok.gov/forms

The Oklahoma CWSRF receives a portion of their funding from the U.S. Environmental Protection Agency (EPA). The federal funds are used to supplement low interest rate loans to finance wastewater and water quality projects. As a condition of federal grant awards, EPA regulations require that loan recipients and sub-recipients (i.e., prime contractors and subcontractors) make a good-faith effort to award a fair share of work to DBE's who are small business enterprises (SBE's), minority business enterprises (MBE's) and women's business enterprises (WBE's). Additionally, EPA's DBE rule requires loan recipients and sub-recipients adhere to the terms and conditions on Appendix A attached hereto.

To ensure compliance with EPA's DBE requirements, both **Loan Recipients (Project Owners)** and **Prime Contractors must** undertake the good faith efforts to provide opportunities for DBE firms to participate in contracts. EPA regulations require evidence of the demonstration of the six good faith efforts in trying to achieve the DBE participation goals. Oklahoma's negotiated DBE participation goals with EPA can be found on the OWRB Financial Assistance website. The goals are not a quota. The Oklahoma Department of Transportation has developed a DBE Directory of Certified Firms. This database can be found at this website: https://okdot.gob2g.com/Default.asp

Good Faith Efforts: The following good faith efforts apply to the procurement categories involving CWSRF financial assistance funds (See Appendix B: EPA Good Faith Efforts):

1. Ensure DBEs are made aware of contracting opportunities to the fullest extent practicable through outreach and recruitment activities. For state and local government recipients, this will include placing DBEs on solicitation lists and soliciting them whenever they are potential sources.

2. Make information on forthcoming opportunities available to DBEs and arrange time frames for contracts and establish delivery schedules, where the requirements permit, in a way that encourages and facilitates participation by DBEs in the competitive process. This includes, whenever possible, posting solicitations for bids or proposals for a minimum of 30 calendar days before the bid or proposal closing date.

3. Consider in the contracting process whether firms competing for large contracts could subcontract with DBEs. For state and local government recipients, this will include dividing total requirements, when economically feasible, into smaller tasks or quantities to permit maximum participation by DBEs in the competitive process.

4. Encourage contracting with a consortium of DBEs when a contract is too large for one of these firms to handle individually.

5. Use the services and assistance of the Small Business Administration (SBA) and the Minority Business Development Agency of the Department of Commerce.

6. If the prime contractor awards subcontracts, require the prime contractor to take the above steps.

Please submit all information to:
Financial Assistance Division, OWRB
3800 North Classen Blvd, Oklahoma City, OK 73118
Phone: 405.530.8800, FAX: 405.530.8900
http://www.owrb.ok.gov

Demonstration of the Six Good Faith Efforts. See **Appendices A & B** for additional bidding instructions and contract administrative provisions.

A: Project Owners are required to create and maintain a bidders list in accordance with Subpart E of Part 33 of EPA's Disadvantaged Business Enterprise Program rule, (§ 33.501(b)). The list must include all firms that bid or quote on prime contracts, or bid or quote subcontracts, on competitively bid CWSRF funded projects. The bidders list must only be kept until the project period for the identified loan has ended. The following information must be obtained from all prime and subcontractors and can be provided on **Bidders List (ORF-249)**:

1. Entity's name with point of contact
2. Entity's mailing address, telephone number, and e-mail address
3. The procurement on which the entity bid or quoted, and when; and
4. Entity's status as an MBE/WBE or non-MBE/WBE

B: Project Owners are required to undertake good faith efforts. Steps 1 through 5 can be utilized during the project planning, design and/or pre-bidding phase, to assure that qualified DBE firms have procurement opportunities in construction, equipment, services, and supplies.

To provide procurement opportunities to DBE Firms, the Project Owner should undertake the following:

- Conduct pre-bid meetings to inform potential bidders/contractors about DBE requirements and provide guidance in undertaking the required good faith efforts.

- Use listings of certified DBEs from the U.S. Small Business Administration (SBA), Oklahoma Department of Transportation (ODOT), etc, to solicit DBE firms as prime contractors whenever they are potential candidates. Project Owners should advertise in minority, local and regional newspapers and in the Dodge report.
- Invite DBE firms, where appropriate, to meetings, conferences etc., to inform them of procurement opportunities and develop, where possible, reasonable contract and delivery schedules that encourage and facilitate participation by DBE's. This includes, whenever possible, a minimum of 30 calendar days for bids or request for proposals.
- Determine if a project can be broken down into smaller components/contracts to allow opportunity for DBE firms to bid both as prime-contractors and as sub-contractors.
- For projects broken down into smaller components (e.g., painting, roofing, excavation, pipe laying, etc.,) ensure that the delivery schedules are reasonable.
- Encourage DBE firms, where appropriate, to apply as a consortium of DBE's, when a contract is too large for one of these firms to handle individually.
- **Require prime contractor** to complete **ORF Form 6100-3** & **ORF Form 6100-4** and submit with bid proposal to Project Owner.

C: Project Owners must require the prime contractor to undertake steps 1 through 5 of the Good Faith Efforts in providing DBE firms opportunity for sub-contracts.

Project Owner must provide the **DBE Guidance (ORF-267)** and associated forms to Prime Contractors for utilization of DBE's in the bidding documents.

APPENDIX A: Project Owner, Prime Contractor and Sub-Contractor Responsibilities

EPA's Disadvantaged Business Enterprise Program rule applies to contract procurement actions funded in part by EPA assistance agreements awarded after May 27, 2008. The rule is found at Federal regulation Title 40, Part 33. Specific responsibilities are highlighted below.

Project Owner Responsibilities:

- Include OWRB's DBE guidance (ORF-267) in each contract with a primary contractor.

- Employ the six Good Faith Efforts during prime contractor procurement (§33.301).

- Require prime contractor to comply with the following prime contractor requirements of Title 40 Part 33:

    a) To employ the six Good Faith Efforts steps in paragraphs (a) through (e) of § 33.301 if the prime contractor awards subcontracts (§ 33.301(f)).

    b) To provide **ORF form 6100-2** – *DBE Subcontractor Participation Form* **to all DBE subcontractors** (Optional submittal by subcontractors) (§ 33.302(e)).

    c) To submit **ORF form 6100-3** – *DBE Program Subcontractor Performance Form* and **ORF form 6100-4** – *DBE Program Subcontractor Utilization Form* **with bid package or proposal**. (§ 33.302 (f) and (g)).

    d) To pay its subcontractor for satisfactory performance no more than 30 days from the prime contractor's receipt of payment from the recipient (§ 33.302(a)).

    e) To notify recipient in writing by its prime contractor prior to any termination of a DBE subcontractor for convenience by the prime contractor (§ 33.302(b)).

    f) To employ the six good faith efforts described in § 33.301 if soliciting a replacement subcontractor after a DBE subcontractor fails to complete work under the subcontract for any reason. (§ 33.302(c)).

    g) To employ the six good faith efforts described in § 33.301 even if the prime contractor has achieved its fair share objectives under subpart D of Part 33. (§33.302(d)).

h) Provide Project Owner DBE participation achievements with bid proposal – this includes all information necessary for the Owner to complete the **Bidders List (ORF-249)**. The Owner may allow the prime contractor to complete the **Bidders List (ORF-249)**; however, the **Owner is responsible for review and submittal**.

- Maintain records documenting compliance with the requirements of Title 40 Part 33, including **Bidders List (ORF-249)** and documentation of the good faith efforts (§ 33.301(a)) by the Project Owner and prime contractor.

Prime Contractor Responsibilities:

- Employ the six Good Faith Efforts steps in paragraphs (a) through (e) of § 33.301 if the prime contractor awards subcontracts (§ 33.301(f)).

- Provide **ORF form 6100-2** – *DBE Program Subcontractor Participation Form* and **ORF form 6100-3** – *DBE Program Subcontractor Performance Form* to each DBE subcontractor as part of the bid conference and prior to opening of the contractor's bid or proposal (§ 33.302(e) and (f)). Complete **ORF form 6100-4** – *DBE Program Subcontractor Utilization Form* (§ 33.302(g))

- Submit to recipient with bid package or proposal the completed **ORF form 6100-4**, plus an **ORF form 6100-3** for each DBE subcontractor used in the contractor's bid or proposal (§ 33.302(f) and (g)).

- Pay subcontractors for satisfactory performance no more than 30 days from the prime contractor's receipt of payment from the Project Owner (§ 33.302(a)).

- Notify the recipient in writing prior to prime contractor termination of a DBE subcontractor for convenience (§ 33.302(b)).

- Employ the six good faith efforts described in (§ 33.301) if soliciting a replacement subcontractor after a DBE subcontractor fails to complete work under the subcontract for any reason. (§ 33.302(c)).

- Employ the six good faith efforts described in (§ 33.301) even if the prime contractor has achieved its fair share objectives under subpart D of Part 33. (§33.302(d)).

- Provide Project Owner DBE participation achievements with bid proposal. This includes information necessary for Owner's completion of the **Bidders List (ORF-249)**.

- Maintain records documenting its compliance with the requirements of Title 40 Part 33, including **Bidders List (ORF-249)** and documentation of the good faith efforts (§ 33.301(a)) by the Project Owner and prime contractor.

Subcontractor Responsibilities:

- May submit **ORF form 6100-2** – *DBE Subcontractor Participation Form* to Debra Bradford, EPA Region 6 DBE Coordinator (§ 33.302(e)). Submitted if concerns with EPA funded project (e.g. termination, late payment, etc.)

- Must complete **ORF form 6100-3** – *DBE Program Subcontractor Performance Form*, and submit it to the prime contractor soliciting services from the subcontractor prior to the opening of bids for the prime contract.

Summary of ORF Forms

ORF Form	Requirement	Provided By	Completed By	Submitted To
6100-2: DBE Subcontractor Participation Form	Project Owners required to have prime contractors provide form to Subcontractors	Prime Contractors to DBE Subcontractors	DBE Subcontractors if concerns with EPA funded project (e.g. termination, late payment, etc)	EPA Region 6 DBE Coordinator, Debora Bradford
6100-3: DBE Subcontractor Performance Form	Project Owners required to have prime contractors provide form to Subcontractors	Prime Contractors to DBE Subcontractors	DBE Subcontractors with Prime Contractor's Signature. Completed when bidding on a job.	Project Owners as part of a bid or proposal package
6100-4: DBE Subcontractor Utilization Form	Project Owners required to have prime contractors complete the form	Project Owners to Prime Contractors	Prime Contractors to indicate the utilization of a DBE.	Project Owners as part of bid or proposal

APPENDIX B: TITLE 40 PART 33 SUBPART C—GOOD FAITH EFFORTS

§ 33.102 When do the requirements of this part apply?

The requirements of this part apply to procurement under CWSRF financial assistance agreements performed entirely within the United States, whether by a Project Owner or its prime contractor, for construction, equipment, services, and supplies.

§ 33.106 What assurances must CWSRF financial assistance recipients obtain from their contractors?

The recipient must ensure that each procurement contract it awards contains the term and condition specified in Appendix A to this part concerning compliance with the requirements of this part.

§ 33.206 Is there a list of certified MBEs and WBEs?

The Oklahoma Department of Transportation has developed a DBE Directory of Certified Firms. This database can be found at this website: https://okdot.gob2g.com/Default.asp. There may be other DBEs outside of this database.

§ 33.301 What does this subpart require?

A recipient, including one exempted from applying the fair share objective requirements by §33.411, is required to make the following good faith efforts whenever procuring construction, equipment, services and supplies under an CWSRF financial assistance agreement, even if it has achieved its fair share objectives under subpart D of this part:

a) Ensure DBE's are made aware of contracting opportunities fully practicable through outreach and recruitment activities. For State and Local and Government recipients, this will include placing DBEs on solicitation lists and soliciting them whenever they are potential sources.
b) Make information on forthcoming opportunities available to DBE's, arrange periods for contracts, and establish delivery schedules, where the requirements permit, in a way that encourages and facilitates participation by DBE's in the competitive process. This includes, whenever possible, posting solicitations for bids or proposals for a minimum of 30 calendar days before the bid or proposal closing date.

c) Consider in the contracting process whether firms competing for large contracts could subcontract with DBE's. For state and local Government recipients, this will include dividing total requirements when economically feasible into smaller tasks or quantities to permit maximum participation by DBEs in the competitive process.
d) Encourage contracting with a consortium of DBE's when a contract is too large for one of these firms to handle individually.
e) Use the services and assistance of the SBA and the Minority Business Development Agency of the Department of Commerce.
f) If the prime contractor awards subcontracts, require the prime contractor to take the steps in paragraphs (a) through (e) of this section.

§ 33.302 Are there any additional contract administration requirements?

a) Project Owners must require its prime contractor to pay its subcontractor for satisfactory performance no more than 30 days from the prime contractor's receipt of payment from the recipient.
b) Its prime contractor must notify Project Owner in writing prior to any termination of a DBE subcontractor for convenience by the prime contractor.
c) If a DBE subcontractor fails to complete work under the subcontract for any reason, the recipient must require the prime contractor to employ the six good faith efforts described in § 33.301 if soliciting a replacement subcontractor.
d) A Project Owner must require its prime contractor to employ the six good faith efforts described in §33.301 even if the prime contractor has achieved its fair share objectives under §33.301 subpart D above.
e) A recipient must require its prime contractor to provide **ORF Form 6100–2**—DBE Program Subcontractor Participation Form to all of its DBE subcontractors. **ORF Form 6100–2** gives a DBE subcontractor the opportunity to describe the work the DBE subcontractor received from the prime contractor, how much the DBE subcontractor was paid and any other concerns the DBE subcontractor might have, for example reasons why the DBE subcontractor believes it was terminated by the prime contractor. DBE subcontractors may send completed copies of **ORF Form 6100–2** directly to the appropriate EPA DBE Coordinator.
f) A recipient must require its prime contractor to have its DBE subcontractors complete **ORF Form 6100–3**—DBE Program Subcontractor Performance Form. A recipient must then require its prime contractor to include all completed forms as part of the prime contractor's bid or proposal package.
g) A recipient must require its prime contractor to complete and submit **ORF Form 6100–4**—DBE Program Subcontractor Utilization Form as part of the prime contractor's bid or proposal package.

h) Copies of **ORF Form 6100–2**—DBE Program Subcontractor Participation Form, **ORF Form 6100–3**—DBE Program Subcontractor Performance Form and **ORF Form 6100–4**—DBE Program Subcontractor Utilization Form may be obtained from EPA OSDBU's Home Page on the Internet or directly from EPA OSDBU.

i) A recipient must ensure that each procurement contract it awards contains the term and condition specified in the Appendix A concerning compliance with the requirements of this part. A recipient must also ensure that this term and condition is included in each procurement contract awarded by an entity receiving an identified loan under a financial assistance agreement to capitalize a revolving loan fund.

§ 33.410 Can a recipient be penalized for failing to meet its fair share objectives?

A recipient cannot be penalized, or treated by EPA as being in noncompliance with this subpart, solely because it's MBE or WBE participation does not meet its applicable fair share objective. However, EPA may take remedial action under § 33.105 for a recipient's failure to comply with other provisions of this part, including, but not limited to, the good faith efforts requirements described in subpart C of this part.

Source: *Federal Requirements and Contract Provisions for Special Appropriation Act Projects, US Environmental Protection Agency, Region III, June 2008*

APPENDIX C: RESOURCE LISTING CONTACT INFORMATION FOR UTILIZATION OF MINORITY AND WOMEN'S BUSINESS ENTERPRISES

Resource Listing	Contact Information	Website
U.S. Small Business Administration (SBA) In addition to the national office, the SBA has local district and regional offices to assist small businesses in contracting with the public and private sector.	US Small Business Administration 409 3rd St, SW Washington DC 20416 Phone: 800-827-5722	https://www.sba.gov/
U. S. Small Business Administration (SBA) - OK. District Office	301 NW 6th St. Oklahoma City, OK 73102 Phone: 405.609.0800	https://www.sba.gov/offices/district/ok/oklahoma-city
Minority Business Development Administration (MBDA): The MBDA is an agency within the U.S. Dept. of Commerce, created to foster the development and growth of minority businesses in the U.S. and coordinates resources in the public and private sectors to help MBEs.	1401 Constitution Ave NW Washington, D.C. 20230 Email: support@mbda.gov Phone: (202) 482-2000	http://www.mbda.gov/
Standard Industrial Classification Codes (SIC) or North American Industry Classification System (NAICS) codes visit the websites.	U.S. Bureau of Labor Statistics Postal Square Building, 2 Massachusetts Ave. NE Washington, DC 20212-0001 Phone: 1-202-691-5200	http://www.bls.gov/iag/tgs/iag_index_naics.htm
Oklahoma Department of Transportation (ODOT) and the Minority/Disadvantaged Business Enterprise (ODOT – MBE/DBE). Project Owners and bidders may locate qualified M/WBE's through the MBE/WBE Directory	200 NE 21st Street Oklahoma City, OK 73105 Phone: 405.521.2082	https://okdot.gob2g.com/Default.asp

US EPA Office of Small and Disadvantaged Business Utilization (OSDBU): advocates and advances the business, regulatory, and environmental compliance concerns of small and socio-economically disadvantaged businesses. The Small Business Vendor Profile System contains information of number of small and disadvantaged companies registered with OSDBU.	USEPA Office of Small Programs 1200 Pennsylvania Ave. NW Mail Code 1230T Washington, D.C. 20460 Phone: 202 566-2075	http://cfpub.epa.gov/sbvps/ Select "search the OSBP Registry" and click on the search criteria of interest (ethnicity, size, SIC, etc.)
National Black Chamber of Commerce	4400 Jenifer St NW #331, Washington, DC 20015 Phone: 202 466-6888 Fax: 202 466-4918 Email: info@nationalbcc.org	http://www.nationalbcc.org
U.S. Hispanic Chamber of Commerce	424 K St NW #401, Washington, DC 20005 Phone: (202) 842-1212	http://www.ushcc.com
National Association of Minority Contractors (NAMC)	910 17th Street, NW, Suite 413 Washington, DC 20006 Phone: 202.296.1600 info@namcnational.org	http://namcnational.org/
National Association of Women's Business Owners (NAWBO)	601 Pennsylvania Ave NW South Building, Ste 900 Washington, DC 20004 Phone: 800-556-2926 Fax: 202-403-3788	www.nawbo.org
National Minority Supplier Development Council, Inc. (NMSDC)	1359 Broadway, 10th Floor, Suite 1000 New York, NY 10018 Phone: (212) 944-2430 Fax: (212) 719-9611	http://www.nmsdc.org/

Native American Development Corporation (NADC) - provides technical assistance, financial lending opportunities, and champions small businesses	17 N. 26th St. Billings, MT 59101 Phone: (406) 259-3804 Fax: (406) 259-4569 Email: nadcptac@nadc-nabn.org	http://www.nadc-nabn.org/
City of Tulsa - Human Rights Department Maintains a list of Minority and Female business Enterprises that are certified through the "building Resources in Developing and Growing Enterprises	175 E. 2nd St. Tulsa, OK. 74103 Phone: (918) 596-7818	https://www.cityoftulsa.org/government/departments/resilience-and-equity/small-business-enterprise-program/ Click on the 'member list"
Southwest Minority Supplier Development Council: Maintains lists of certified Minority Business Enterprises in Oklahoma	7301 Broadway Ext Ste 224, OKC, OK 73116 Phone: (405) 767-9900	http://www.smsdc.org/
National Association of Women in Construction (NAWIC)	327 S. Adams Street Fort Worth, TX 76104 Phone: 800-552-3506 817.877.5551 Fax: 817.877.0324	http://www.nawic.org/
Oklahoma Department of Central Services Maintains a list of MBE/WBEs	OMES Central Purchasing 5005 N. Lincoln Blvd., Suite 300 OKC, OK 73105 Phone: 405-522-0955	https://omes.ok.gov/services/purchasing
Bureau of Indian Affairs - Maintains a list of Native American Contractors and Suppliers by Trade	P.O. Box 368 (1 Mile North on Hwy 281) Anadarko, OK 73005 Phone: (405) 247-6673 Fax: (405) 247-5611	https://www.bia.gov/as-ia/ieed/division-economic-development/native-american-business-development
Oklahoma Department of Commerce Certification Programs and information	900 N Stiles Ave. Oklahoma City, OK 73104 Phone: (405) 815-6552 Toll-Free: (800) 879-6552	https://okcommerce.gov/business/certifications/
Cherokee Nation Tribal Employment Rights Office - Maintains a directory of Indian-owned businesses	Cherokee Nation TERO Dept. P.O. Box 948 Tahlequah, OK 74465 Phone: (918) 453-5334 or Toll Free: 800-256-0671 ext 5334	http://cherokeetero.com/

Disadvantaged Business Enterprise (DBE) Program
DBE Subcontractor Participation Form

OWRB Financial Assistance Agreement recipients must require prime contractors to provide this form to their DBE[1] subcontractors[2]. This form gives a DBE subcontractor the opportunity to describe work received and/or report any concerns regarding the project.

Subcontractor Name	Project Name Shawnee Wastewater System Improvements
Bid Proposal #	Point of Contact
Address	
Phone	e-mail
Prime Contractor Name	Funding Entity Oklahoma Water Resources Board

Contract Item Number	Description of Work Received from the Prime Contractor Involving Construction, Services, Equipment or Supplies	Amount Received from Prime Contractor

1 A DBE is a Disadvantaged, Minority, or Woman Business Enterprise that has been certified by an entity from which EPA accepts certifications as described in 40 CFR 33.204-33.205 or certified by EPA. EPA accepts certifications from entities that meet or exceed EPA certification standards as described in 40 CFR 33.202.

2 Subcontractor is defined as a company, firm, joint venture, or individual who enters into an agreement with a contractor to provide services pursuant to an EPA award of financial assistance.

Please use the space below to report any concerns regarding the above OWRB-funded project:

Subcontractor signature	Print Name
Title	Date

Disadvantaged Business Enterprise (DBE) Program
DBE Subcontractor Performance Form

This form is intended to capture the DBE[1] subcontractor's[2] description of work to be performed and the price of the work submitted to the prime contractor. OWRB Financial Assistance Agreement Recipients must require prime contractors to provide this form to their DBE subcontractors.

Subcontractor Name _____	Project Name Shawnee Wastewater System Improvements
Bid Proposal # _____	Point of Contact _____
Address _____	
Phone _____	e-mail _____
Prime Contractor Name _____	Funding Entity Oklahoma Water Resources Board

Contract Item Number	**Description of Work Received from the Prime Contractor Involving Construction, Services, Equipment or Supplies**	**Price of Work Submitted to the Prime Contractor**

DBE Certified by: ☐ DOT ☐ SBA ☐ Other:_____

Meets or exceeds EPA certification standards? ☐ Yes ☐ No ☐ Unknown

1 A DBE is a Disadvantaged, Minority, or Woman Business Enterprise that has been certified by an entity from which EPA accepts certifications as described in 40 CFR 33.204-33.205 or certified by EPA. EPA accepts certifications from entities that meet or exceed EPA certification standards as described in 40 CFR 33.202.

2 Subcontractor is defined as a company, firm, joint venture, or individual who enters into an agreement with a contractor to provide services pursuant to an EPA award of financial assistance.

I certify under penalty of perjury that the forgoing statements are true and correct. Signing this form does not signify a commitment to utilize the subcontractors above. I am aware of that in the event of a replacement of a subcontractor, I will adhere to the replacement requirements set forth in 40 CFR Part 33 Section 33.302 (c).

Prime Contractor signature	Print Name
Title	Date

Subcontractor signature	Print Name
Title	Date

Disadvantaged Business Enterprise (DBE) Program
DBE Subcontractor Utilization form

This form is intended to capture the prime contractor's actual and/or anticipated use of identified certified DBE[1] subcontractors[2] and the estimated dollar amount of each subcontract. OWRB Financial Assistance Agreement recipients must require their prime contractors to complete this form and include it in the bid or proposal package. Prime contractors should also maintain a copy of this form on file.

Prime Contractor Name	Project Name Shawnee Wastewater System Improvements
Bid Proposal #	Point of Contact
Address	
Phone	e-mail
Funding Entity Oklahoma Water Resources Board	I have identified potential DBE certified subcontractors: ☐ YES ☐ NO
If yes, please complete the table below. If no, please explain:	

Subcontractor Name/ Company Name	Address/Phone/Email	Estimated $ Amount	Currently Certified?

1 A DBE is a Disadvantaged, Minority, or Woman Business Enterprise that has been certified by an entity from which EPA accepts certifications as described in 40 CFR 33.204-33.205 or certified by EPA. EPA accepts certifications from entities that meet or exceed EPA certification standards as described in 40 CFR 33.202.

2 Subcontractor is defined as a company, firm, joint venture, or individual who enters into an agreement with a contractor to provide services pursuant to an EPA award of financial assistance.

I certify under penalty of perjury that the forgoing statements are true and correct. Signing this form does not signify a commitment to utilize the subcontractors above. I am aware of that in the event of a replacement of a subcontractor, I will adhere to the replacement requirements set forth in 40 CFR Part 33 Section 33.302 (c).

Prime Contractor signature	Print Name
Title	Date

BIDDER'S AMERICAN IRON AND STEEL CERTIFICATION

I, the Bidder, _____, authorized representative of
Contractor's Authorized Representative
_____, hereby certify that I am aware of the requirement per Section
Contractor
436(a)-(f) of the Consolidated Appropriations Act of 2014, as amended, by which all applicable products made primarily out of iron and steel used in this project must be manufactured in the United States, and that the bid prepared for Shawnee Wastewater System Improvements has been prepared accordingly, as it is funded through the Clean Water State Revolving Fund (loan number ORF-20-0018-CWA). I, the Bidder, am aware that none of the funds appropriated or otherwise made available by the Consolidated Appropriation Act of 2014 (Appropriations Act) shall be used for the construction, alteration, maintenance, or repair of a treatment works unless all of the iron and steel products used in the project are produced in the United States. I, the Bidder, furthermore certify the following:
Project

1. The bidder understands the term "iron and steel products" applies to the following materials made primarily of iron or steel, and used for the construction, alteration, maintenance, or repair of publicly owned treatment works; lined or unlined pipes and fittings, manhole covers and other municipal castings, hydrants, tanks, flanges, pipe clamps and restraints, valves, structural steel, reinforced precast concrete, and other construction materials as defined by the U.S. Environmental Protection Agency (EPA). For additional guidance, visit http://water.epa.gov/grants_funding/aisrequirement.cfm

2. The bidder further states that this requirement applies to all portions of the project that are subcontracted.

3. This "Bidder's American Iron and Steel Certification" is to be submitted by the bidder as part of its bid.

4. Iron and steel of unknown origin are considered to have been produced or manufactured outside the United States.

5. Consistent with the terms of the Owner's bid solicitation and the provisions of Use of American Iron and Steel Section 436, the bidder certifies that this bid reflects the bidder's best, good faith effort to identify domestic sources of iron and steel goods in the bid solicitation where such American-made goods are available on the schedule and consistent with the deadlines prescribed in or required by the bid solicitation.

6. The bidder certifies that all iron and steel products contained in the bid solicitation that are American-made have been so identified, and if this bid is accepted, the bidder agrees that it will provide reasonable, sufficient, and timely verification to the Owner of the U.S. production of each component so identified.

7. The bidder certifies that for any iron and steel products that are not American-made and are so identified in this bid, the bidder has included in or attached to this bid one or both of the following, as applicable:

    a. Identification of and citation to a categorical waiver published by EPA in the Federal Register that is applicable to such component or components, and an analysis that supports its applicability to the component or components; If the Administrator of EPA receives a request for a waiver under this section, the Administrator shall make available to the public on an informal basis a copy of the request and information available to the Administrator concerning the request, and shall allow for informal public input on the request for at least 15 days prior to making a finding based on the request. The Administrator shall make the request and accompanying information available by electronic means, including on the official public Internet Website of EPA.

    b. Verifiable documentation sufficient to the Owner, as required in the bid solicitation or otherwise, that the bidder has sought to secure American-produced goods but has determined that such goods are not available on the schedule and consistent with the deadlines prescribed in the bid solicitation, with assurance adequate for the bidder under the applicable conditions stated in the bid solicitation or otherwise.

8. The bidder certifies that for any such product or products that are not so available, the bidder has also provided in or attached to this bid certification, including but not limited to the verifiable documentation and a full description of the bidder's efforts to secure any such American-produced iron and steel goods, that the bidder believes are sufficient to provide and as far as possible constitute the detailed justification required for a waiver under Use of American Iron and Steel with respect to such product or products.

9. If use of a non-compliant iron and/or steel product is permanently incorporated into a project, one or more of the following can occur:

    a. Request a waiver where appropriate.
    b. Require the removal of the non-domestic item.
    c. Payment withholding of all or part of the project.

10. The bidder further agrees that, if this bid is accepted, it will assist the Owner in amending, supplementing, or further supporting such information as required by the Owner to request and, as applicable, implement the terms of a waiver with respect to any such product or products. The EPA strongly recommends the use of a step certification, similar to the one used by the Federal Highway Administration. The final manufacturer can also certify that the manufacturing process occurred in the United States.

_____ __/__/_____
Contractor's Authorized Representative Signature Date

Bidder's Statement about: **Equal Opportunity Clause (ORF-211)**

Mark **one**:

☐ I have participated in previous contract(s) or subcontract(s) subject to the equal opportunity clause under Executive Orders 11246 and 11375 or preceding Executive Orders 10925 and 11114. I have filed all reports due under the requirements contained in 40 CFR, Part C, 8.11.

☐ I have not participated in previous contract(s) subject to the equal opportunity clause under Executive Orders 11246 and 11375 or preceding Executive Orders 10925 and 11114.

☐ I will obtain a similar statement from any proposed subcontractor(s), when appropriate.

Bidder's Statement about: **Non-Segregated Facilities (ORF-212)**

☐ I hereby certify that I do not and will not maintain any facilities provided for my employees in a segregated manner, or permit my employees to perform their services at any location under my control where segregated facilities are maintained; and that I will obtain a similar certification prior to the award of any subcontract exceeding $10,000 which is not exempted from the equal opportunity clause.

Bidder's Statement about: **Bonds**

☐ I hereby certify that I will obtain and provide a Bid Bond along with my Bid.

☐ I hereby certify that, in the event of being awarded a Contract, I will provide a Performance Bond for 100% of the contract amount.

☐ I hereby certify that, in the event of being awarded a Contract, I will provide a Statutory/Payment Bond for 100% of the contract amount.

☐ I hereby certify that, in the event of being awarded a Contract, I will provide a Maintenance Bond for at least 1 year after construction completion, and 100% of the contract amount

Bidder's Statement about: **Sam.gov registration**

Mark **one**:

☐ I have registered in SAM.gov and my status is "active".

☐ I am not currently registered in SAM.gov, but I will be registered and holding an "active" status prior to the beginning of any construction.

☐ I certify that I will actively review the SAM.gov status of all of the subcontractors in this work to verify they are registered and their status is "active".

Bidder's Statement about: **Davis Bacon Act and American Iron and Steel**

☐ I hereby certify that all of my employees will be paid according to the Davis Bacon Act.

☐ I hereby certify that I will comply with the American Iron and Steel requirement.

_____

Name and Title of Prospective Prime Contractor's Representative

_____

Signature of Prospective Prime Contractor's Representative

_____

_____

_____

Name and address of Prospective Prime Contractor

"General Decision Number: OK20220071 06/17/2022

Superseded General Decision Number: OK20210071

State: Oklahoma

Construction Type: Building
Building Construction -does not include residential construction consisting of single family homes and apartments up to and including 4 stories. (Including building projects on treatment plants)

Counties: Coal, Garvin, Haskell, Hughes, Latimer, Marshall, McCurtain, Pittsburg, Pontotoc, Pottawatomie, Pushmataha and Seminole Counties in Oklahoma.

Note: Contracts subject to the Davis-Bacon Act are generally required to pay at least the applicable minimum wage rate required under Executive Order 14026 or Executive Order 13658. Please note that these Executive Orders apply to covered contracts entered into by the federal government that are subject to the Davis-Bacon Act itself, but do not apply to contracts subject only to the Davis-Bacon Related Acts, including those set forth at 29 CFR 5.1(a)(2)-(60).

If the contract is entered into on or after January 30, 2022, or the contract is renewed or extended (e.g., an option is exercised) on or after January 30, 2022:	. Executive Order 14026 generally applies to the contract. . The contractor must pay all covered workers at least $15.00 per hour (or the applicable wage rate listed on this wage determination, if it is higher) for all hours spent performing on the contract in 2022.
If the contract was awarded on or between January 1, 2015 and January 29, 2022, and the contract is not renewed or extended on or after January 30, 2022:	. Executive Order 13658 generally applies to the contract. . The contractor must pay all covered workers at least $11.25 per hour (or the applicable wage rate listed on this wage determination, if it is higher) for all

	hours spent performing on that contract in 2022.

The applicable Executive Order minimum wage rate will be adjusted annually. If this contract is covered by one of the Executive Orders and a classification considered necessary for performance of work on the contract does not appear on this wage determination, the contractor must still submit a conformance request.

Additional information on contractor requirements and worker protections under the Executive Orders is available at https://www.dol.gov/agencies/whd/government-contracts.

Modification Number	Publication Date
0	01/07/2022
1	02/18/2022
2	02/25/2022
3	06/17/2022

BOIL0592-001 01/01/2021

	Rates	Fringes
BOILERMAKER	$ 29.98	23.62

ELEC0301-006 06/01/2017

MCCURTAIN COUNTY ONLY

	Rates	Fringes
ELECTRICIAN	$ 23.80	10.85

ELEC0301-007 06/01/2017

MCCURTAIN COUNTY ONLY

	Rates	Fringes
ELECTRICIAN (Low Voltage Wiring, Alarm Installation, and Sound and Communications Systems Installation Only)	$ 23.80	10.85

ELEC0584-013 06/01/2021

COAL, HASKELL, HUGHES, LATIMER, PITTSBURG AND PUSHMATAHA

COUNTIES ONLY

	Rates	Fringes
ELECTRICIAN (Low Voltage Wiring, Alarm Installation, and Sound and Communications Systems Installation Only)	$ 32.38	7%+10.15

ELEC0584-016 06/01/2021

COAL, HASKELL, HUGHES, LATIMER, PITTSBURG AND PUSHMATAHA COUNTIES ONLY

	Rates	Fringes
ELECTRICIAN	$ 32.38	7%+10.15

ELEC1141-015 09/01/2021

GARVIN, MARSHALL, PONTOTOC, POTTAWATOMIE AND SEMINOLE COUNTIES

	Rates	Fringes
ELECTRICIAN	$ 35.05	6.00+12.50%+1.75%+3%

ELEC1141-019 06/01/2019

GARVIN, MARSHALL, PONTOTOC, POTTAWATOMIE AND SEMINOLE COUNTIES

	Rates	Fringes
ELECTRICIAN (Low Voltage Wiring, Alarm Installation, and Sound and Communication Systems Installation Only)	$ 21.60	3%+12%+1/2%+8.60

ENGI0627-018 10/01/2021

	Rates	Fringes
POWER EQUIPMENT OPERATOR:		
Group 1	$ 32.05	15.30
Group 2	$ 30.35	15.30
Group 3	$ 29.80	15.30
Group 4	$ 29.00	15.30
Group 5	$ 27.70	15.30
Group10	$ 23.00	15.30

POWER EQUIPMENT OPERATOR
GROUP 1: All Crane Type Equipment 200 ton and larger and including 400 ton capacity cranes. All Tower Cranes.

GROUP 2: All Crane Type Equipment 100 ton capacity and larger cranes, and less than 200 ton capacity.

GROUP 3: All Crane Type Equipment 50 ton capacity and larger, and less than 100 ton capacity. Crane Equipment (as rated by mfg.) 3 cu. yd. and over Guy derrick Whirley Power Driven Hole Digger (with 30' and longer mast).

GROUP 4: CRANES with Boom Incl. Jib less than 100 ft and less than 3 cu. Yd.; Overhead Monorail Crane.

GROUP 5: BULLDOZER
GROUP 10: OILER

IRON0048-013 06/01/2019

GARVIN, MARSHALL, PONTOTOC, POTTAWATOMIE AND SEMINOLE COUNTIES ONLY

	Rates	Fringes
IRONWORKER, STRUCTURAL	$ 26.00	15.35

---

* IRON0584-024 06/01/2021

COAL, HASKELL, HUGHES, LATIMER, MCCURTAIN, PITTSBURG AND PUSHMATAHA COUNTIES ONLY

	Rates	Fringes
IRONWORKER, STRUCTURAL	$ 26.25	15.35

PLUM0344-015 07/01/2021

COAL, GARVIN, HUGHES, MARSHALL, PONTOTOC, POTTAWATOMIE, PUSHMATAHA AND SEMINOLE COUNTIES

	Rates	Fringes
PIPEFITTER (Including Installation of HVAC		

Electrical/Temperature
Controls and HVAC Pipe
Installation).....$ 34.50 16.18

PLUM0344-018 07/01/2021

COAL, GARVIN, HUGHES, MARSHALL, PONTOTOC, POTTAWATOMIE,
PUSHMATAHA AND SEMINOLE COUNTIES

	Rates	Fringes
PLUMBER (Excludes HVAC Pipe Installation)	$ 34.50	16.18

PLUM0430-015 07/01/2021

HASKELL, LATIMER, MCCURTAIN AND PITTSBURG COUNTIES

	Rates	Fringes
PIPEFITTER (Including Installation of HVAC Electrical/Temperature Controls and HVAC Pipe Installation)	$ 32.85	14.08

PLUM0430-018 07/01/2021

HASKELL, LATIMER, MCCURTAIN AND PITTSBURG COUNTIES

	Rates	Fringes
PLUMBER (Excludes HVAC Pipe Installation)	$ 32.85	14.08

SHEE0124-013 07/01/2021

COAL, GARVIN, HUGHES, MARSHALL, PONTOTOC, POTTAWATOMIE AND
SEMINOLE COUNTIES ONLY

	Rates	Fringes
SHEET METAL WORKER (Including HVAC Duct Installation)	$ 33.38	16.36

SHEE0270-007 06/01/2020

HASKELL, LATIMER, MCCURTAIN, PITTSBURG AND PUSHMATAHA COUNTIES

ONLY

	Rates	Fringes
SHEET METAL WORKER (Including HVAC Duct Installation)	$ 35.49	14.60

---

* SUOK2012-051 06/18/2012

	Rates	Fringes
BRICKLAYER	$ 20.00	0.00
CARPENTER (Acoustical Ceiling Installation Only)	$ 16.24	0.00
CARPENTER (Drywall Hanging Only)	$ 14.96 **	0.00
CARPENTER, Excludes Acoustical Ceiling Installation, Drywall Hanging, and Form Work	$ 16.82	2.82
CEMENT MASON/CONCRETE FINISHER	$ 14.50 **	0.00
FLOOR LAYER (Hardwood and Carpet)	$ 18.74	1.10
FORM WORKER	$ 16.79	3.12
GLAZIER	$ 15.27	1.46
LABORER: Common or General	$ 11.43 **	0.00
LABORER: Mason Tender - Brick	$ 12.00 **	0.00
LABORER: Mason Tender - Cement/Concrete	$ 13.04 **	0.00
LABORER: Pipelayer	$ 11.65 **	0.00
OPERATOR: Backhoe/Excavator/Trackhoe	$ 16.83	0.00
OPERATOR: Forklift	$ 18.02	0.00
PAINTER: Brush, Roller and Spray	$ 12.32 **	0.00

ROOFER.....$ 15.00 0.29

SPRINKLER FITTER (Fire Sprinklers).....$ 21.52 6.00

WELDERS - Receive rate prescribed for craft performing operation to which welding is incidental.

==========

** Workers in this classification may be entitled to a higher minimum wage under Executive Order 14026 ($15.00) or 13658 ($11.25). Please see the Note at the top of the wage determination for more information.

Note: Executive Order (EO) 13706, Establishing Paid Sick Leave for Federal Contractors applies to all contracts subject to the Davis-Bacon Act for which the contract is awarded (and any solicitation was issued) on or after January 1, 2017. If this contract is covered by the EO, the contractor must provide employees with 1 hour of paid sick leave for every 30 hours they work, up to 56 hours of paid sick leave each year. Employees must be permitted to use paid sick leave for their own illness, injury or other health-related needs, including preventive care; to assist a family member (or person who is like family to the employee) who is ill, injured, or has other health-related needs, including preventive care; or for reasons resulting from, or to assist a family member (or person who is like family to the employee) who is a victim of, domestic violence, sexual assault, or stalking. Additional information on contractor requirements and worker protections under the EO is available at https://www.dol.gov/agencies/whd/government-contracts.

Unlisted classifications needed for work not included within the scope of the classifications listed may be added after award only as provided in the labor standards contract clauses (29CFR 5.5 (a) (1) (ii)).

The body of each wage determination lists the classification and wage rates that have been found to be prevailing for the cited type(s) of construction in the area covered by the wage determination. The classifications are listed in alphabetical order of ""identifiers"" that indicate whether the particular

rate is a union rate (current union negotiated rate for local), a survey rate (weighted average rate) or a union average rate (weighted union average rate).

Union Rate Identifiers

A four letter classification abbreviation identifier enclosed in dotted lines beginning with characters other than ""SU"" or ""UAVG"" denotes that the union classification and rate were prevailing for that classification in the survey. Example: PLUM0198-005 07/01/2014. PLUM is an abbreviation identifier of the union which prevailed in the survey for this classification, which in this example would be Plumbers. 0198 indicates the local union number or district council number where applicable, i.e., Plumbers Local 0198. The next number, 005 in the example, is an internal number used in processing the wage determination. 07/01/2014 is the effective date of the most current negotiated rate, which in this example is July 1, 2014.

Union prevailing wage rates are updated to reflect all rate changes in the collective bargaining agreement (CBA) governing this classification and rate.

Survey Rate Identifiers

Classifications listed under the ""SU"" identifier indicate that no one rate prevailed for this classification in the survey and the published rate is derived by computing a weighted average rate based on all the rates reported in the survey for that classification. As this weighted average rate includes all rates reported in the survey, it may include both union and non-union rates. Example: SULA2012-007 5/13/2014. SU indicates the rates are survey rates based on a weighted average calculation of rates and are not majority rates. LA indicates the State of Louisiana. 2012 is the year of survey on which these classifications and rates are based. The next number, 007 in the example, is an internal number used in producing the wage determination. 5/13/2014 indicates the survey completion date for the classifications and rates under that identifier.

Survey wage rates are not updated and remain in effect until a new survey is conducted.

Union Average Rate Identifiers

Classification(s) listed under the UAVG identifier indicate that no single majority rate prevailed for those classifications; however, 100% of the data reported for the classifications was union data. EXAMPLE: UAVG-OH-0010

08/29/2014. UAVG indicates that the rate is a weighted union average rate. OH indicates the state. The next number, 0010 in the example, is an internal number used in producing the wage determination. 08/29/2014 indicates the survey completion date for the classifications and rates under that identifier.

A UAVG rate will be updated once a year, usually in January of each year, to reflect a weighted average of the current negotiated/CBA rate of the union locals from which the rate is based.

WAGE DETERMINATION APPEALS PROCESS

1.) Has there been an initial decision in the matter? This can be:

* an existing published wage determination
* a survey underlying a wage determination
* a Wage and Hour Division letter setting forth a position on a wage determination matter
* a conformance (additional classification and rate) ruling

On survey related matters, initial contact, including requests for summaries of surveys, should be with the Wage and Hour National Office because National Office has responsibility for the Davis-Bacon survey program. If the response from this initial contact is not satisfactory, then the process described in 2.) and 3.) should be followed.

With regard to any other matter not yet ripe for the formal process described here, initial contact should be with the Branch of Construction Wage Determinations. Write to:

Branch of Construction Wage Determinations
Wage and Hour Division
U.S. Department of Labor
200 Constitution Avenue, N.W.
Washington, DC 20210

2.) If the answer to the question in 1.) is yes, then an interested party (those affected by the action) can request review and reconsideration from the Wage and Hour Administrator (See 29 CFR Part 1.8 and 29 CFR Part 7). Write to:

Wage and Hour Administrator
U.S. Department of Labor

200 Constitution Avenue, N.W.
Washington, DC 20210

The request should be accompanied by a full statement of the interested party's position and by any information (wage payment data, project description, area practice material, etc.) that the requestor considers relevant to the issue.

3.) If the decision of the Administrator is not favorable, an interested party may appeal directly to the Administrative Review Board (formerly the Wage Appeals Board). Write to:

Administrative Review Board
U.S. Department of Labor
200 Constitution Avenue, N.W.
Washington, DC 20210

4.) All decisions by the Administrative Review Board are final.

==========

END OF GENERAL DECISIO"

"General Decision Number: OK20220035 02/25/2022

Superseded General Decision Number: OK20210035

State: Oklahoma

Construction Type: Heavy

Counties: Atoka, Bryan, Carter, Choctaw, Coal, Garvin, Haskell, Hughes, Johnston, Latimer, Love, Marshall, McCurtain, Murray, Pittsburg, Pontotoc, Pottawatomie, Pushmataha and Seminole Counties in Oklahoma.

HEAVY CONSTRUCTION PROJECTS (including sewer/water line construction; heavy construction projects on treatment plants) (excludes heavy dredging and water well drilling)

Note: Contracts subject to the Davis-Bacon Act are generally required to pay at least the applicable minimum wage rate required under Executive Order 14026 or Executive Order 13658. Please note that these Executive Orders apply to covered contracts entered into by the federal government that are subject to the Davis-Bacon Act itself, but do not apply to contracts subject only to the Davis-Bacon Related Acts, including those set forth at 29 CFR 5.1(a)(2)-(60).

If the contract is entered into on or after January 30, 2022, or the contract is renewed or extended (e.g., an option is exercised) on or after January 30, 2022:	. Executive Order 14026 generally applies to the contract. . The contractor must pay all covered workers at least $15.00 per hour (or the applicable wage rate listed on this wage determination, if it is higher) for all hours spent performing on the contract in 2022.
If the contract was awarded on or between January 1, 2015 and January 29, 2022, and the contract is not renewed or extended on or after January 30, 2022:	. Executive Order 13658 generally applies to the contract. . The contractor must pay all covered workers at least $11.25 per hour (or the applicable wage rate listed on this wage determination, if it is higher) for all

	hours spent performing on that contract in 2022.

The applicable Executive Order minimum wage rate will be adjusted annually. If this contract is covered by one of the Executive Orders and a classification considered necessary for performance of work on the contract does not appear on this wage determination, the contractor must still submit a conformance request.

Additional information on contractor requirements and worker protections under the Executive Orders is available at https://www.dol.gov/agencies/whd/government-contracts.

Modification Number	Publication Date
0	01/07/2022
1	02/18/2022
2	02/25/2022

ELEC1002-005 08/15/2021

	Rates	Fringes
ELECTRICIAN	$ 42.82	29.5%+7.95

ENGI0627-017 10/15/2021

	Rates	Fringes
POWER EQUIPMENT OPERATOR:		
Group 1	$ 32.05	15.30
Group 2	$ 30.35	15.30
Group 3	$ 29.80	15.30
Group 4	$ 29.00	15.30
Group 5	$ 27.70	15.30
Group 6	$ 26.45	15.30
Group 8	$ 24.45	15.30
Group 9	$ 23.95	15.30
Group10	$ 23.00	15.30

POWER EQUIPMENT OPERATOR
GROUP 1: All Crane Type Equipment 200 ton and larger and including 400 ton capacity cranes. All Tower Cranes.

GROUP 2: All Crane Type Equipment 100 ton capacity and larger cranes, and less than 200 ton capacity.

GROUP 3: All Crane Type Equipment 50 ton capacity and larger

cranes, and less than 100 ton capacity. Crane Equipment (as rated by mfg.) 3 cu. yd. and over Guy derrick Whirley Power Driven Hole Digger (with 30' and longer mast).

GROUP 4: CRANES with Boom Incl. Jib less than 100 ft and less than 3 cu. Yd.; Overhead Monorail Crane; MECHANIC; BACKHOE; TRACKHOE; GRADER/BLADE; Power Driven Hole Digger with less than 30' mast

GROUP 5: BULLDOZER; BOBCAT/SKID STEER/SKID LOADER
GROUP 6: Rotary Drilling Machine when operated from console
GROUP 8: FORK-LIFT; TRACTOR
GROUP 9: PUMPS
GROUP 10:OILER

IRON0048-008 06/01/2019

CARTER, GARVIN, JOHNSTON, LOVE, MARSHALL, MURRAY, PONTOTOC, POTTAWATOMIE, AND SEMINOLE COUNTIES

	Rates	Fringes
IRONWORKER, STRUCTURAL	$ 26.00	15.35

IRON0584-022 06/01/2019

ATOKA, BRYAN, CHOCTAW, COAL, HASKELL, HUGHES, LATIMER, MCCURTAIN, PITTSBURG, AND PUSHMATAHA COUNTIES

	Rates	Fringes
IRONWORKER, STRUCTURAL	$ 26.00	15.35

TEAM0516-006 07/06/2020

	Rates	Fringes
TRUCK DRIVER		
(3) Flatbed Truck	$ 27.25	13.15

---

* SUOK2012-013 05/18/2012

	Rates	Fringes
CARPENTER (Form Work Only)	$ 14.00 **	0.00
LABORER: Common or General	$ 13.09 **	0.00

LABORER: Pipelayer.....$ 14.00 ** 0.00

OPERATOR: Scraper.....$ 14.00 ** 0.00

WELDERS - Receive rate prescribed for craft performing operation to which welding is incidental.

==========

** Workers in this classification may be entitled to a higher minimum wage under Executive Order 14026 ($15.00) or 13658 ($11.25). Please see the Note at the top of the wage determination for more information.

Note: Executive Order (EO) 13706, Establishing Paid Sick Leave for Federal Contractors applies to all contracts subject to the Davis-Bacon Act for which the contract is awarded (and any solicitation was issued) on or after January 1, 2017. If this contract is covered by the EO, the contractor must provide employees with 1 hour of paid sick leave for every 30 hours they work, up to 56 hours of paid sick leave each year. Employees must be permitted to use paid sick leave for their own illness, injury or other health-related needs, including preventive care; to assist a family member (or person who is like family to the employee) who is ill, injured, or has other health-related needs, including preventive care; or for reasons resulting from, or to assist a family member (or person who is like family to the employee) who is a victim of, domestic violence, sexual assault, or stalking. Additional information on contractor requirements and worker protections under the EO is available at https://www.dol.gov/agencies/whd/government-contracts.

Unlisted classifications needed for work not included within the scope of the classifications listed may be added after award only as provided in the labor standards contract clauses (29CFR 5.5 (a) (1) (ii)).

The body of each wage determination lists the classification and wage rates that have been found to be prevailing for the cited type(s) of construction in the area covered by the wage determination. The classifications are listed in alphabetical order of ""identifiers"" that indicate whether the particular rate is a union rate (current union negotiated rate for local), a survey rate (weighted average rate) or a union average rate

(weighted union average rate).

Union Rate Identifiers

A four letter classification abbreviation identifier enclosed in dotted lines beginning with characters other than ""SU"" or ""UAVG"" denotes that the union classification and rate were prevailing for that classification in the survey. Example: PLUM0198-005 07/01/2014. PLUM is an abbreviation identifier of the union which prevailed in the survey for this classification, which in this example would be Plumbers. 0198 indicates the local union number or district council number where applicable, i.e., Plumbers Local 0198. The next number, 005 in the example, is an internal number used in processing the wage determination. 07/01/2014 is the effective date of the most current negotiated rate, which in this example is July 1, 2014.

Union prevailing wage rates are updated to reflect all rate changes in the collective bargaining agreement (CBA) governing this classification and rate.

Survey Rate Identifiers

Classifications listed under the ""SU"" identifier indicate that no one rate prevailed for this classification in the survey and the published rate is derived by computing a weighted average rate based on all the rates reported in the survey for that classification. As this weighted average rate includes all rates reported in the survey, it may include both union and non-union rates. Example: SULA2012-007 5/13/2014. SU indicates the rates are survey rates based on a weighted average calculation of rates and are not majority rates. LA indicates the State of Louisiana. 2012 is the year of survey on which these classifications and rates are based. The next number, 007 in the example, is an internal number used in producing the wage determination. 5/13/2014 indicates the survey completion date for the classifications and rates under that identifier.

Survey wage rates are not updated and remain in effect until a new survey is conducted.

Union Average Rate Identifiers

Classification(s) listed under the UAVG identifier indicate that no single majority rate prevailed for those classifications; however, 100% of the data reported for the classifications was union data. EXAMPLE: UAVG-OH-0010 08/29/2014. UAVG indicates that the rate is a weighted union average rate. OH indicates the state. The next number, 0010 in

the example, is an internal number used in producing the wage determination. 08/29/2014 indicates the survey completion date for the classifications and rates under that identifier.

A UAVG rate will be updated once a year, usually in January of each year, to reflect a weighted average of the current negotiated/CBA rate of the union locals from which the rate is based.

WAGE DETERMINATION APPEALS PROCESS

1.) Has there been an initial decision in the matter? This can be:

* an existing published wage determination
* a survey underlying a wage determination
* a Wage and Hour Division letter setting forth a position on a wage determination matter
* a conformance (additional classification and rate) ruling

On survey related matters, initial contact, including requests for summaries of surveys, should be with the Wage and Hour National Office because National Office has responsibility for the Davis-Bacon survey program. If the response from this initial contact is not satisfactory, then the process described in 2.) and 3.) should be followed.

With regard to any other matter not yet ripe for the formal process described here, initial contact should be with the Branch of Construction Wage Determinations. Write to:

Branch of Construction Wage Determinations
Wage and Hour Division
U.S. Department of Labor
200 Constitution Avenue, N.W.
Washington, DC 20210

2.) If the answer to the question in 1.) is yes, then an interested party (those affected by the action) can request review and reconsideration from the Wage and Hour Administrator (See 29 CFR Part 1.8 and 29 CFR Part 7). Write to:

Wage and Hour Administrator
U.S. Department of Labor
200 Constitution Avenue, N.W.
Washington, DC 20210

The request should be accompanied by a full statement of the interested party's position and by any information (wage payment data, project description, area practice material, etc.) that the requestor considers relevant to the issue.

3.) If the decision of the Administrator is not favorable, an interested party may appeal directly to the Administrative Review Board (formerly the Wage Appeals Board). Write to:

Administrative Review Board
U.S. Department of Labor
200 Constitution Avenue, N.W.
Washington, DC 20210

4.) All decisions by the Administrative Review Board are final.

==========

END OF GENERAL DECISIO"

NOTICE OF AWARD

Owner: Shawnee Municipal Authority
Engineer: Wall Engineering, LLC
Contractor:
Project: Wastewater System Improvements
Project No.: SHN-20-01
Date Issued:
Effective Date:

You are notified that Owner has accepted your Bid dated **[date]** for the above Contract, and that you are the Successful Bidder and are awarded a Contract for:

New 4.5 MGD SBR Wastewater Treatment Plant & Related Equipment/Units, New Southside Wastewater Lift Station & Screening System, 24" HDPE Forcemain between New WWTP and New Lift Station, & 30" HDPE Discharge Forcemain to Discharge Location.

The Contract Price of the awarded Contract is $**[Contract Price]**. Contract Price is subject to adjustment based on the provisions of the Contract, including but not limited to those governing changes and Unit Price Work as applicable.

An unexecuted copy of the Agreement along with a copy of the Contract Documents accompany this Notice of Award and have been transmitted or made available to Bidder electronically. Drawings will be delivered separately from the other Contract Documents as will sections not applicable to Award.

You must comply with the following conditions precedent within 15 days of the date of receipt of this Notice of Award:

1. Deliver to Owner (**6**) counterparts of the Agreement, signed by Bidder (as Contractor).
2. Deliver with the signed Agreement(s) the Contract security (such as required performance and payment bonds) and insurance documentation, as specified in the Instructions to Bidders and in the General Conditions, Articles 2 and 6.
3. Other conditions precedent (if any): **[Describe other conditions that require Successful Bidder's compliance]**

Failure to comply with these conditions within the time specified will entitle Owner to consider you in default, annul this Notice of Award, and declare your Bid security forfeited.

Within 10 days after you comply with the above conditions, Owner will return to you one fully signed counterpart of the Agreement, together with any additional copies as indicated in General Conditions.

Owner: **Shawnee Municipal Authority**

By *(signature)*: _____

Name *(printed)*: _____

Title (printed): _____

EJCDC® C-510, Notice of Award.
Copyright© 2018 National Society of Professional Engineers, American Council of Engineering Companies, and American Society of Civil Engineers. All rights reserved.

AGREEMENT BETWEEN OWNER AND CONTRACTOR FOR CONSTRUCTION CONTRACT (STIPULATED PRICE)

This Agreement is by and between **Shawnee Municipal Authority** ("Owner") and **[name of contracting entity]** ("Contractor").

Terms used in this Agreement have the meanings stated in the General Conditions and the Supplementary Conditions.

Owner and Contractor hereby agree as follows:

ARTICLE 1—WORK

1.01 Contractor shall complete all Work as specified or indicated in the Contract Documents. The Work is generally described as follows: **Wastewater System Improvements**

ARTICLE 2—THE PROJECT

2.01 The Project, of which the Work under the Contract Documents is a part, is generally described as follows: **Wastewater System Improvements**

ARTICLE 3—ENGINEER

3.01 The Owner has retained **Wall Engineering, LLC** ("Engineer") to act as Owner's representative, assume all duties and responsibilities of Engineer, and have the rights and authority assigned to Engineer in the Contract.

3.02 The part of the Project that pertains to the Work has been designed by **Engineer.**

ARTICLE 4—CONTRACT TIMES

4.01 *Time is of the Essence*

A. All time limits for Milestones, if any, Substantial Completion, and completion and readiness for final payment as stated in the Contract Documents are of the essence of the Contract.

4.03 *Contract Times: Days*

A. The Work will be substantially complete within **730** days after the date when the Contract Times commence to run as provided in Paragraph 4.01 of the General Conditions, and completed and ready for final payment in accordance with Paragraph 15.06 of the General Conditions within **850** days after the date when the Contract Times commence to run.

4.05 *Liquidated Damages*

A. Contractor and Owner recognize that time is of the essence as stated in Paragraph 4.01 above and that Owner will suffer financial and other losses if the Work is not completed and Milestones not achieved within the Contract Times, as duly modified. The parties also

**EJCDC® C-520, Agreement between Owner and Contractor for Construction Contract (Stipulated Price).
Copyright© 2018 National Society of Professional Engineers, American Council of Engineering Companies, and American Society of Civil Engineers. All rights reserved.**

recognize the delays, expense, and difficulties involved in proving, in a legal or arbitration proceeding, the actual loss suffered by Owner if the Work is not completed on time. Accordingly, instead of requiring any such proof, Owner and Contractor agree that as liquidated damages for delay (but not as a penalty):

1. *Substantial Completion:* Contractor shall pay Owner **$2,500** for each day that expires after the time (as duly adjusted pursuant to the Contract) specified above for Substantial Completion, until the Work is substantially complete.

2. *Completion of Remaining Work:* After Substantial Completion, if Contractor shall neglect, refuse, or fail to complete the remaining Work within the Contract Times (as duly adjusted pursuant to the Contract) for completion and readiness for final payment, Contractor shall pay Owner **$2,500** for each day that expires after such time until the Work is completed and ready for final payment.

4. Liquidated damages for failing to timely attain Milestones, Substantial Completion, and final completion are not additive, and will not be imposed concurrently.

B. If Owner recovers liquidated damages for a delay in completion by Contractor, then such liquidated damages are Owner's sole and exclusive remedy for such delay, and Owner is precluded from recovering any other damages, whether actual, direct, excess, or consequential, for such delay, except for special damages (if any) specified in this Agreement.

4.06 *Special Damages*

A. Contractor shall reimburse Owner (1) for any fines or penalties imposed on Owner as a direct result of the Contractor's failure to attain Substantial Completion according to the Contract Times, and (2) for the actual costs reasonably incurred by Owner for engineering, construction observation, inspection, and administrative services needed after the time specified in Paragraph 4.02 for Substantial Completion (as duly adjusted pursuant to the Contract), until the Work is substantially complete.

B. After Contractor achieves Substantial Completion, if Contractor shall neglect, refuse, or fail to complete the remaining Work within the Contract Times, Contractor shall reimburse Owner for the actual costs reasonably incurred by Owner for engineering, construction observation, inspection, and administrative services needed after the time specified in Paragraph 4.02 for Work to be completed and ready for final payment (as duly adjusted pursuant to the Contract), until the Work is completed and ready for final payment.

C. The special damages imposed in this paragraph are supplemental to any liquidated damages for delayed completion established in this Agreement.

ARTICLE 5—CONTRACT PRICE

5.01 Owner shall pay Contractor for completion of the Work in accordance with the Contract Documents, the amounts that follow, subject to adjustment under the Contract:

A. Total of Lump Sum Amount and Unit Price Work (subject to final Unit Price adjustment) $**[number]**.

**EJCDC® C-520, Agreement between Owner and Contractor for Construction Contract (Stipulated Price).
Copyright© 2018 National Society of Professional Engineers, American Council of Engineering Companies, and American Society of Civil Engineers. All rights reserved.**

B. For all Work, at the prices stated in Contractor's Bid, attached hereto as an exhibit.

ARTICLE 6—PAYMENT PROCEDURES

6.01 *Submittal and Processing of Payments*

A. Contractor shall submit Applications for Payment in accordance with Article 15 of the General Conditions. Applications for Payment will be processed by Engineer as provided in the General Conditions.

6.02 *Progress Payments; Retainage*

A. Owner shall make progress payments on the basis of Contractor's Applications for Payment as outlined in the General & Supplemental Conditions during performance of the Work as provided in Paragraph 6.02.A.1 below, provided that such Applications for Payment have been submitted in a timely manner and otherwise meet the requirements of the Contract. All such payments will be measured by the Schedule of Values established as provided in the General Conditions (and in the case of Unit Price Work based on the number of units completed) or, in the event there is no Schedule of Values, as provided elsewhere in the Contract.

1. Prior to Substantial Completion, progress payments will be made in an amount equal to the percentage indicated below but, in each case, less the aggregate of payments previously made and less such amounts as Owner may withhold, including but not limited to liquidated damages, in accordance with the Contract.

a. **95** percent of the value of the Work completed (with the balance being retainage).

b. **95** percent of cost of materials and equipment not incorporated in the Work (with the balance being retainage).

B. Upon Substantial Completion **of the entire construction to be provided under the construction Contract Documents**, Owner shall pay an amount sufficient to increase total payments to Contractor to **95%** percent of the Work completed, less such amounts set off by Owner pursuant to Paragraph 15.01.E of the General Conditions, and less **125%** percent of Engineer's estimate **(if greater than 5% of work completed)** of the value of Work to be completed or corrected as shown on the punch list of items to be completed or corrected prior to final payment.

6.03 *Final Payment*

A. Upon final completion and acceptance of the Work, Owner shall pay the remainder of the Contract Price in accordance with Paragraph 15.06 of the General Conditions.

6.04 *Consent of Surety*

A. Owner will not make final payment, or return or release retainage at Substantial Completion or any other time, unless Contractor submits written consent of the surety to such payment, return, or release.

**EJCDC® C-520, Agreement between Owner and Contractor for Construction Contract (Stipulated Price).
Copyright© 2018 National Society of Professional Engineers, American Council of Engineering Companies, and American Society of Civil Engineers. All rights reserved.**

ARTICLE 7—CONTRACT DOCUMENTS

7.01 Contents

A. The Contract Documents consist of all of the following:

1. Executed Agreement
2. Addenda (if any)
3. Advertisement for Bids
4. Instructions to Bidders
5. Bid Form/Proposal
6. ~~Statement of Bidders Qualifications~~
7. List of Manufacturers
8. List of Proposed Subcontractors
9. General Conditions
10. Supplementary Conditions
11. OWRB Supplemental Contract Conditions
12. OWRB / Funding Agency Requirements as outlined in 00_01_10 Table of Contents
13. Division 01 General Requirements
14. Technical Specifications as listed in the Table of Contents
15. Drawings
16. Performance Bond
17. Payment Bond
18. Maintenance Bond
19. Certificates of Insurance
20. Exhibits to this Agreement (enumerated as follows):
    a. Contractor's Bid – Bid Form "Attachment "A"
21. The following which may be delivered or issued on or after the Effective Date of the Contract and are not attached hereto:
    a. Notice to Proceed.
    b. Work Change Directives
    c. Change Order
    d. Field Orders

**EJCDC® C-520, Agreement between Owner and Contractor for Construction Contract (Stipulated Price).
Copyright© 2018 National Society of Professional Engineers, American Council of Engineering Companies, and American Society of Civil Engineers. All rights reserved.**

B. The documents listed in Paragraph 7.01.A are attached to this Agreement (except as expressly noted otherwise above).

C. There are no Contract Documents other than those listed above in this Article 7.

D. The Contract Documents may only be amended, modified, or supplemented as provided in the General Conditions.

7.01 *Contents*

A. The Contract Documents consist of all of the following:

1. Executed Agreement.
2. Bonds:
    a. Performance bond (together with power of attorney).
    b. Payment bond (together with power of attorney).
3. General Conditions.
4. Supplementary Conditions.
5. Specifications as listed in the table of contents of the project manual (copy of list
6. Drawings (not attached but incorporated by reference) consisting of **[number]** sheets with each sheet bearing the following general title: **Wastewater System Improvements**.
7. Drawings listed on the attached sheet index.
8. Addenda (numbers **[number]** to **[number]**, inclusive).
9. Exhibits to this Agreement (enumerated as follows):
    a. **Attachment "A" – Bid Summary Sheet.**
10. The following which may be delivered or issued on or after the Effective Date of the Contract and are not attached hereto:
    a. Notice to Proceed.
    b. Work Change Directives.
    c. Change Orders.
    d. Field Orders.
    e. Warranty Bond

B. The Contract Documents listed in Paragraph 7.01.A are attached to this Agreement (except as expressly noted otherwise above).

C. OWRB / Funding Agency Special Requirements as outlined in 00_01_10 Table of Contents

D. There are no Contract Documents other than those listed above in this Article 7.

EJCDC® C-520, Agreement between Owner and Contractor for Construction Contract (Stipulated Price).
Copyright© 2018 National Society of Professional Engineers, American Council of Engineering Companies, and American Society of Civil Engineers. All rights reserved.

E. The Contract Documents may only be amended, modified, or supplemented as provided in the Contract.

ARTICLE 8—REPRESENTATIONS, CERTIFICATIONS, AND STIPULATIONS

8.01 *Contractor's Representations*

A. In order to induce Owner to enter into this Contract, Contractor makes the following representations:

1. Contractor has examined and carefully studied the Contract Documents, including Addenda.

2. Contractor has visited the Site, conducted a thorough visual examination of the Site and adjacent areas, and become familiar with the general, local, and Site conditions that may affect cost, progress, and performance of the Work.

3. Contractor is familiar with all Laws and Regulations that may affect cost, progress, and performance of the Work.

4. Contractor has carefully studied the reports of explorations and tests of subsurface conditions at or adjacent to the Site and the drawings of physical conditions relating to existing surface or subsurface structures at the Site that have been identified in the Supplementary Conditions, with respect to the Technical Data in such reports and drawings.

5. Contractor has carefully studied the reports and drawings relating to Hazardous Environmental Conditions, if any, at or adjacent to the Site that have been identified in the Supplementary Conditions, with respect to Technical Data in such reports and drawings.

6. Contractor has considered the information known to Contractor itself; information commonly known to contractors doing business in the locality of the Site; information and observations obtained from visits to the Site; the Contract Documents; and the Technical Data identified in the Supplementary Conditions or by definition, with respect to the effect of such information, observations, and Technical Data on (a) the cost, progress, and performance of the Work; (b) the means, methods, techniques, sequences, and procedures of construction to be employed by Contractor; and (c) Contractor's safety precautions and programs.

7. Based on the information and observations referred to in the preceding paragraph, Contractor agrees that no further examinations, investigations, explorations, tests, studies, or data are necessary for the performance of the Work at the Contract Price, within the Contract Times, and in accordance with the other terms and conditions of the Contract.

8. Contractor is aware of the general nature of work to be performed by Owner and others at the Site that relates to the Work as indicated in the Contract Documents.

**EJCDC® C-520, Agreement between Owner and Contractor for Construction Contract (Stipulated Price).
Copyright© 2018 National Society of Professional Engineers, American Council of Engineering Companies, and American Society of Civil Engineers. All rights reserved.**

9. Contractor has given Engineer written notice of all conflicts, errors, ambiguities, or discrepancies that Contractor has discovered in the Contract Documents, and of discrepancies between Site conditions and the Contract Documents, and the written resolution thereof by Engineer is acceptable to Contractor.

10. The Contract Documents are generally sufficient to indicate and convey understanding of all terms and conditions for performance and furnishing of the Work.

11. Contractor's entry into this Contract constitutes an incontrovertible representation by Contractor that without exception all prices in the Agreement are premised upon performing and furnishing the Work required by the Contract Documents.

8.02 *Contractor's Certifications*

A. Contractor certifies that it has not engaged in corrupt, fraudulent, collusive, or coercive practices in competing for or in executing the Contract. For the purposes of this Paragraph 8.02:

1. "corrupt practice" means the offering, giving, receiving, or soliciting of anything of value likely to influence the action of a public official in the bidding process or in the Contract execution;

2. "fraudulent practice" means an intentional misrepresentation of facts made (a) to influence the bidding process or the execution of the Contract to the detriment of Owner, (b) to establish Bid or Contract prices at artificial non-competitive levels, or (c) to deprive Owner of the benefits of free and open competition;

3. "collusive practice" means a scheme or arrangement between two or more Bidders, with or without the knowledge of Owner, a purpose of which is to establish Bid prices at artificial, non-competitive levels; and

4. "coercive practice" means harming or threatening to harm, directly or indirectly, persons or their property to influence their participation in the bidding process or affect the execution of the Contract.

8.03 *Standard General Conditions*

A. Owner stipulates that if the General Conditions that are made a part of this Contract are EJCDC® C-700, Standard General Conditions for the Construction Contract (2018), published by the Engineers Joint Contract Documents Committee, and if Owner is the party that has furnished said General Conditions, then Owner has plainly shown all modifications to the standard wording of such published document to the Contractor in the Supplementary Conditions.

8.04 Other Provisions

A. Owner stipulates that if the General Conditions that are made a part of this Contract are based on EJCDC® C-700, Standard General Conditions for the Construction Contract, published by the Engineers Joint Contract Documents Committee®, and if Owner is the party that has furnished said General Conditions, then Owner has plainly shown all modifications to the standard wording of such published document to the Contractor, through a process

**EJCDC® C-520, Agreement between Owner and Contractor for Construction Contract (Stipulated Price).
Copyright© 2018 National Society of Professional Engineers, American Council of Engineering Companies, and American Society of Civil Engineers. All rights reserved.**

such as highlighting or "track changes" (redline/strikeout), or in the Supplementary Conditions.

B. The Contractor hereby represents and warrants to and for the benefit of the Owner that:

1. The Contractor has reviewed the grant conditions and all the other conditions in the Supplemental Conditions ORF-185.

2. The Contractor has reviewed and understands the Davis Bacon Act and prevailing wage rate requirements and will provide any further verified information, certification or assurance of compliance as may be required by the Owner.

3. The Contractor acknowledges to and for the benefit of the City of Choctaw ("Purchaser") and the State of Oklahoma (the "State") that it understands the goods and services under this Agreement are being funded with monies made available by the Clean Water State Revolving Fund and/or Drinking Water State Revolving Fund and such law contains provisions commonly known as "American Iron and Steel;" that requires all of the iron and steel products used in the project to be produced in the United States ("American Iron and Steel Requirement") including iron and steel products provided by the Contactor pursuant to this Agreement.

4. The Contractor hereby represents and warrants to and for the benefit of the Purchaser and the State that (a) the Contractor has reviewed and understands the American Iron and Steel Requirement, (b) all of the iron and steel products used in the project will be and/or have been produced in the United States in a manner that complies with the American Iron and Steel Requirement, unless a waiver of the requirement is approved, and (c) the Contractor will provide any further verified information, certification or assurance of compliance with this paragraph, or information necessary to support a waiver of the American Iron and Steel Requirement, as may be requested by the Purchaser or the State.

5. The Contractor has registered for the System for Award Management (SAM) that is required for all SRF program projects. SAM replaces Central Contractor Registration/Federal Agency Registration, Online Representations and Certifications Application, and Excluded Parties List System. Applicants and awardees are required to complete a one-time free registration to provide basic information relevant to procurement and financial transactions. Registrants must retain an active status to be eligible for SRF projects. New Applicants and Awardees can go to SAM.gov to complete the registration process.

6. Notwithstanding any other provision of this Agreement, any failure to comply with this paragraph by the Contractor shall permit the Purchaser or State to recover as damages against the Contractor any loss, expense, or cost (including without limitation attorney's fees) incurred by the Purchaser or State resulting from any such failure (including without limitation any impairment or loss of funding, whether in whole or in part, from the State or any damages owed to the State by the Purchaser). While the Contractor has no direct contractual privity with the State, as a lender to the Purchaser for the funding of its project, the Purchaser and the Contractor agree that the State is a third-

EJCDC® C-520, Agreement between Owner and Contractor for Construction Contract (Stipulated Price).
Copyright© 2018 National Society of Professional Engineers, American Council of Engineering Companies, and American Society of Civil Engineers. All rights reserved.

party beneficiary and neither this paragraph (nor any other provision of this Agreement necessary to give this paragraph force or effect) shall be amended or waived without the prior written consent of the State.

EJCDC® C-520, Agreement between Owner and Contractor for Construction Contract (Stipulated Price).
Copyright© 2018 National Society of Professional Engineers, American Council of Engineering Companies, and American Society of Civil Engineers. All rights reserved.

IN WITNESS WHEREOF, Owner and Contractor have signed this Agreement.

This Agreement will be effective on **[indicate date on which Contract becomes effective]** (which is the Effective Date of the Contract).

Owner:

_____
(typed or printed name of organization)

By: _____
(individual's signature)

Date: _____
(date signed)

Name: _____
(typed or printed)

Title: _____
(typed or printed)

Attest: _____
(individual's signature)

Title: _____
(typed or printed)

Address for giving notices:

_____

_____

_____

Designated Representative:

Name: _____
(typed or printed)

Title: _____
(typed or printed)

Address:

_____

_____

_____

Phone: _____

Email: _____

*(If **[Type of Entity]** is a corporation, attach evidence of authority to sign. If **[Type of Entity]** is a public body, attach evidence of authority to sign and resolution or other documents authorizing execution of this Agreement.)*

Contractor:

_____
(typed or printed name of organization)

By: _____
(individual's signature)

Date: _____
(date signed)

Name: _____
(typed or printed)

Title: _____
(typed or printed)

*(If **[Type of Entity]** is a corporation, a partnership, or a joint venture, attach evidence of authority to sign.)*

Attest: _____
(individual's signature)

Title: _____
(typed or printed)

Address for giving notices:

_____

_____

_____

Designated Representative:

Name: _____
(typed or printed)

Title: _____
(typed or printed)

Address:

_____

_____

_____

Phone: _____

Email: _____

License No.: _____
(where applicable)

State: _____

EJCDC® C-520, Agreement between Owner and Contractor for Construction Contract (Stipulated Price).
Copyright© 2018 National Society of Professional Engineers, American Council of Engineering Companies, and American Society of Civil Engineers. All rights reserved.

EJCDC® C-520, Agreement between Owner and Contractor for Construction Contract (Stipulated Price).
Copyright© 2018 National Society of Professional Engineers, American Council of Engineering Companies, and American Society of Civil Engineers. All rights reserved.

NOTICE TO PROCEED

Owner: Shawnee Municipal Authority
Engineer: Wall Engineering, LLC
Contractor:
Project: Wastewater System Improvements
Project No.: ORF-20-0018-CWA
Date Issued:
Effective Date:

Owner hereby notifies Contractor that the Contract Times under the above Contract will commence to run on **[date Contract Times are to start]** pursuant to Paragraph 4.01 of the General Conditions.

On that date, Contractor shall start performing its obligations under the Contract Documents. No Work will be done at the Site prior to such date.

In accordance with the Agreement:

~~The date by which Substantial Completion must be achieved is **[date for Substantial Completion, from Agreement]**, and the date by which readiness for final payment must be achieved is **[date for readiness, from Agreement]**.~~

~~**[or]**~~

The number of days to achieve Substantial Completion is **730 days** from the date stated above for the commencement of the Contract Times, resulting in a date for Substantial Completion of **[date, calculated from commencement date above]**; and the number of days to achieve readiness for final payment is **850 days** from the commencement date of the Contract Times, resulting in a date for readiness for final payment of **[date, calculated from commencement date above]**.

~~Before starting any Work at the Site, Contractor must comply with the following:~~

~~**[Note any access limitations, security procedures, or other restrictions]**~~

Owner: _____

By *(signature)*: _____

Name *(printed)*: _____

Title: _____

Date Issued: _____

Copy: Engineer

EJCDC® C-550, Notice to Proceed.
Copyright© 2018 National Society of Professional Engineers, American Council of Engineering Companies, and American Society of Civil Engineers. All rights reserved.

PERFORMANCE BOND

Contractor	**Surety**
Name:	Name:
Address *(principal place of business)*:	Address *(principal place of business)*:
Owner	**Contract**
Name: **Shawnee Municipal Authority**	Description *(name and location)*: **Wastewater System Improvements - Shawnee, OK**
Mailing address *(principal place of business)*: **16 West 9th Street, Shawnee, OK 74801-6812**	Contract Price:
	Effective Date of Contract:

Bond

Bond Amount:

Date of Bond:

(Date of Bond cannot be earlier than Effective Date of Contract)

Modifications to this Bond form:

☐ None ☐ See Paragraph 16

Surety and Contractor, intending to be legally bound hereby, subject to the terms set forth in this Performance Bond, do each cause this Performance Bond to be duly executed by an authorized officer, agent, or representative.

Contractor as Principal	Surety
(Full formal name of Contractor)	*(Full formal name of Surety) (corporate seal)*
By: _____ *(Signature)*	By: _____ *(Signature)(Attach Power of Attorney)*
Name: _____ *(Printed or typed)*	Name: _____ *(Printed or typed)*
Title: _____	Title: _____
Attest: _____ *(Signature)*	Attest: _____ *(Signature)*
Name: _____ *(Printed or typed)*	Name: _____ *(Printed or typed)*
Title: _____	Title: _____

Notes: (1) Provide supplemental execution by any additional parties, such as joint venturers. (2) Any singular reference to Contractor, Surety, Owner, or other party is considered plural where applicable. (3) Surety companies executing bonds must appear on the Treasury Department's most current list (Circular 570 as amended) and be authorized to transact business in the State of Oklahoma. Attach a certified Copy of the Power of Attorney

EJCDC® C-610, Performance Bond.
Copyright© 2018 National Society of Professional Engineers, American Council of Engineering Companies, and American Society of Civil Engineers. All rights reserved.

1. The Contractor and Surety, jointly and severally, bind themselves, their heirs, executors, administrators, successors, and assigns to the Owner for the performance of the Construction Contract, which is incorporated herein by reference.

2. If the Contractor performs the Construction Contract, the Surety and the Contractor shall have no obligation under this Bond, except when applicable to participate in a conference as provided in Paragraph 3.

3. If there is no Owner Default under the Construction Contract, the Surety's obligation under this Bond will arise after:

    3.1. The Owner first provides notice to the Contractor and the Surety that the Owner is considering declaring a Contractor Default. Such notice may indicate whether the Owner is requesting a conference among the Owner, Contractor, and Surety to discuss the Contractor's performance. If the Owner does not request a conference, the Surety may, within five (5) business days after receipt of the Owner's notice, request such a conference. If the Surety timely requests a conference, the Owner shall attend. Unless the Owner agrees otherwise, any conference requested under this Paragraph 3.1 will be held within ten (10) business days of the Surety's receipt of the Owner's notice. If the Owner, the Contractor, and the Surety agree, the Contractor shall be allowed a reasonable time to perform the Construction Contract, but such an agreement does not waive the Owner's right, if any, subsequently to declare a Contractor Default;

    3.2. The Owner declares a Contractor Default, terminates the Construction Contract and notifies the Surety; and

    3.3. The Owner has agreed to pay the Balance of the Contract Price in accordance with the terms of the Construction Contract to the Surety or to a contractor selected to perform the Construction Contract.

4. Failure on the part of the Owner to comply with the notice requirement in Paragraph 3.1 does not constitute a failure to comply with a condition precedent to the Surety's obligations, or release the Surety from its obligations, except to the extent the Surety demonstrates actual prejudice.

5. When the Owner has satisfied the conditions of Paragraph 3, the Surety shall promptly and at the Surety's expense take one of the following actions:

    5.1. Arrange for the Contractor, with the consent of the Owner, to perform and complete the Construction Contract;

    5.2. Undertake to perform and complete the Construction Contract itself, through its agents or independent contractors;

    5.3. Obtain bids or negotiated proposals from qualified contractors acceptable to the Owner for a contract for performance and completion of the Construction Contract, arrange for a contract to be prepared for execution by the Owner and a contractor selected with the Owners concurrence, to be secured with performance and payment bonds executed by a qualified surety equivalent to the bonds issued on the Construction Contract, and pay to the Owner the amount of damages as described in Paragraph 7 in excess of the Balance of the Contract Price incurred by the Owner as a result of the Contractor Default; or

Copyright© 2018 National Society of Professional Engineers, American Council of Engineering Companies, and American Society of Civil Engineers. All rights reserved.

5.4. Waive its right to perform and complete, arrange for completion, or obtain a new contractor, and with reasonable promptness under the circumstances:

5.4.1 After investigation, determine the amount for which it may be liable to the Owner and, as soon as practicable after the amount is determined, make payment to the Owner; or

5.4.2 Deny liability in whole or in part and notify the Owner, citing the reasons for denial.

6. If the Surety does not proceed as provided in Paragraph 5 with reasonable promptness, the Surety shall be deemed to be in default on this Bond seven days after receipt of an additional written notice from the Owner to the Surety demanding that the Surety perform its obligations under this Bond, and the Owner shall be entitled to enforce any remedy available to the Owner. If the Surety proceeds as provided in Paragraph 5.4, and the Owner refuses the payment, or the Surety has denied liability, in whole or in part, without further notice, the Owner shall be entitled to enforce any remedy available to the Owner.

7. If the Surety elects to act under Paragraph 5.1, 5.2, or 5.3, then the responsibilities of the Surety to the Owner will not be greater than those of the Contractor under the Construction Contract, and the responsibilities of the Owner to the Surety will not be greater than those of the Owner under the Construction Contract. Subject to the commitment by the Owner to pay the Balance of the Contract Price, the Surety is obligated, without duplication for:

7.1. the responsibilities of the Contractor for correction of defective work and completion of the Construction Contract;

7.2. additional legal, design professional, and delay costs resulting from the Contractor's Default, and resulting from the actions or failure to act of the Surety under Paragraph 5; and

7.3. liquidated damages, or if no liquidated damages are specified in the Construction Contract, actual damages caused by delayed performance or non-performance of the Contractor.

8. If the Surety elects to act under Paragraph 5.1, 5.3, or 5.4, the Surety's liability is limited to the amount of this Bond.

9. The Surety shall not be liable to the Owner or others for obligations of the Contractor that are unrelated to the Construction Contract, and the Balance of the Contract Price will not be reduced or set off on account of any such unrelated obligations. No right of action will accrue on this Bond to any person or entity other than the Owner or its heirs, executors, administrators, successors, and assigns.

10. The Surety hereby waives notice of any change, including changes of time, to the Construction Contract or to related subcontracts, purchase orders, and other obligations.

11. Any proceeding, legal or equitable, under this Bond must be instituted in any court of competent jurisdiction in the location in which the work or part of the work is located and must be instituted within two years after a declaration of Contractor Default or within two years after the Contractor ceased working or within two years after the Surety refuses or fails to perform its obligations under this Bond, whichever occurs first. If the provisions of this paragraph are void or prohibited by law, the minimum periods of limitations available to sureties as a defense in the jurisdiction of the suit will be applicable.

12. Notice to the Surety, the Owner, or the Contractor must be mailed or delivered to the address shown on the page on which their signature appears.

13. When this Bond has been furnished to comply with a statutory or other legal requirement in the location where the construction was to be performed, any provision in this Bond conflicting with said

EJCDC® C-610, Performance Bond.
Copyright© 2018 National Society of Professional Engineers, American Council of Engineering Companies, and American Society of Civil Engineers. All rights reserved.

statutory or legal requirement will be deemed deleted therefrom and provisions conforming to such statutory or other legal requirement will be deemed incorporated herein. When so furnished, the intent is that this Bond will be construed as a statutory bond and not as a common law bond.

14. Definitions

    14.1. *Balance of the Contract Price*—The total amount payable by the Owner to the Contractor under the Construction Contract after all proper adjustments have been made including allowance for the Contractor for any amounts received or to be received by the Owner in settlement of insurance or other claims for damages to which the Contractor is entitled, reduced by all valid and proper payments made to or on behalf of the Contractor under the Construction Contract.

    14.2. *Construction Contract*—The agreement between the Owner and Contractor identified on the cover page, including all Contract Documents and changes made to the agreement and the Contract Documents.

    14.3. *Contractor Default*—Failure of the Contractor, which has not been remedied or waived, to perform or otherwise to comply with a material term of the Construction Contract.

    14.4. *Owner Default*—Failure of the Owner, which has not been remedied or waived, to pay the Contractor as required under the Construction Contract or to perform and complete or comply with the other material terms of the Construction Contract.

    14.5. *Contract Documents*—All the documents that comprise the agreement between the Owner and Contractor.

15. If this Bond is issued for an agreement between a contractor and subcontractor, the term Contractor in this Bond will be deemed to be Subcontractor and the term Owner will be deemed to be Contractor.

16. Modifications to this Bond are as follows: **[Describe modification or enter "None"]**

EJCDC® C-610, Performance Bond.
Copyright© 2018 National Society of Professional Engineers, American Council of Engineering Companies, and American Society of Civil Engineers. All rights reserved.

PAYMENT BOND

Contractor	**Surety**
Name:	Name:
Address *(principal place of business)*:	Address *(principal place of business)*:
Owner	**Contract**
Name: **Shawnee Municipal Authority**	Description *(name and location)*: **Wastewater System Improvements - Shawnee, OK**
Mailing address *(principal place of business)*: **16 West 9th Street, Shawnee, OK 74801-6812**	Contract Price:
	Effective Date of Contract:

Bond

Bond Amount:

Date of Bond:

(Date of Bond cannot be earlier than Effective Date of Contract)

Modifications to this Bond form:

☐ None ☐ See Paragraph 18

Surety and Contractor, intending to be legally bound hereby, subject to the terms set forth in this Payment Bond, do each cause this Payment Bond to be duly executed by an authorized officer, agent, or representative.

Contractor as Principal	Surety
_____	_____
(Full formal name of Contractor)	*(Full formal name of Surety) (corporate seal)*
By: _____	By: _____
(Signature)	*(Signature)(Attach Power of Attorney)*
Name: _____	Name: _____
(Printed or typed)	*(Printed or typed)*
Title: _____	Title: _____
Attest: _____	Attest: _____
(Signature)	*(Signature)*
Name: _____	Name: _____
(Printed or typed)	*(Printed or typed)*
Title: _____	Title: _____

Notes: (1) Provide supplemental execution by any additional parties, such as joint venturers. (2) Any singular reference to Contractor, Surety, Owner, or other party is considered plural where applicable. (3) Surety companies executing bonds must appear on the Treasury Department's most current list (Circular 570 as amended) and be authorized to transact business in the State of Oklahoma. Attach a certified Copy of the Power of Attorney

EJCDC® C-615, Payment Bond.
Copyright© 2018 National Society of Professional Engineers, American Council of Engineering Companies, and American Society of Civil Engineers. All rights reserved.

1. The Contractor and Surety, jointly and severally, bind themselves, their heirs, executors, administrators, successors, and assigns to the Owner to pay for labor, materials, and equipment furnished for use in the performance of the Construction Contract, which is incorporated herein by reference, subject to the following terms.
2. If the Contractor promptly makes payment of all sums due to Claimants, and defends, indemnifies, and holds harmless the Owner from claims, demands, liens, or suits by any person or entity seeking payment for labor, materials, or equipment furnished for use in the performance of the Construction Contract, then the Surety and the Contractor shall have no obligation under this Bond.
3. If there is no Owner Default under the Construction Contract, the Surety's obligation to the Owner under this Bond will arise after the Owner has promptly notified the Contractor and the Surety (at the address described in Paragraph 13) of claims, demands, liens, or suits against the Owner or the Owner's property by any person or entity seeking payment for labor, materials, or equipment furnished for use in the performance of the Construction Contract, and tendered defense of such claims, demands, liens, or suits to the Contractor and the Surety.
4. When the Owner has satisfied the conditions in Paragraph 3, the Surety shall promptly and at the Surety's expense defend, indemnify, and hold harmless the Owner against a duly tendered claim, demand, lien, or suit.
5. The Surety's obligations to a Claimant under this Bond will arise after the following:
    5.1. Claimants who do not have a direct contract with the Contractor
        5.1.1. have furnished a written notice of non-payment to the Contractor, stating with substantial accuracy the amount claimed and the name of the party to whom the materials were, or equipment was, furnished or supplied or for whom the labor was done or performed, within ninety (90) days after having last performed labor or last furnished materials or equipment included in the Claim; and
        5.1.2. have sent a Claim to the Surety (at the address described in Paragraph 13).
    5.2. Claimants who are employed by or have a direct contract with the Contractor have sent a Claim to the Surety (at the address described in Paragraph 13).
6. If a notice of non-payment required by Paragraph 5.1.1 is given by the Owner to the Contractor, that is sufficient to satisfy a Claimant's obligation to furnish a written notice of non-payment under Paragraph 5.1.1.
7. When a Claimant has satisfied the conditions of Paragraph 5.1 or 5.2, whichever is applicable, the Surety shall promptly and at the Surety's expense take the following actions:
    7.1. Send an answer to the Claimant, with a copy to the Owner, within sixty (60) days after receipt of the Claim, stating the amounts that are undisputed and the basis for challenging any amounts that are disputed; and
    7.2. Pay or arrange for payment of any undisputed amounts.
    7.3. The Surety's failure to discharge its obligations under Paragraph 7.1 or 7.2 will not be deemed to constitute a waiver of defenses the Surety or Contractor may have or acquire as to a Claim, except as to undisputed amounts for which the Surety and Claimant have reached agreement. If, however, the Surety fails to discharge its obligations under Paragraph 7.1 or 7.2, the Surety shall indemnify the Claimant for the reasonable attorney's fees the Claimant incurs thereafter to recover any sums found to be due and owing to the Claimant.

Copyright© 2018 National Society of Professional Engineers, American Council of Engineering Companies, and American Society of Civil Engineers. All rights reserved.

8. The Surety's total obligation will not exceed the amount of this Bond, plus the amount of reasonable attorney's fees provided under Paragraph 7.3, and the amount of this Bond will be credited for any payments made in good faith by the Surety.

9. Amounts owed by the Owner to the Contractor under the Construction Contract will be used for the performance of the Construction Contract and to satisfy claims, if any, under any construction performance bond. By the Contractor furnishing and the Owner accepting this Bond, they agree that all funds earned by the Contractor in the performance of the Construction Contract are dedicated to satisfying obligations of the Contractor and Surety under this Bond, subject to the Owner's priority to use the funds for the completion of the work.

10. The Surety shall not be liable to the Owner, Claimants, or others for obligations of the Contractor that are unrelated to the Construction Contract. The Owner shall not be liable for the payment of any costs or expenses of any Claimant under this Bond, and shall have under this Bond no obligation to make payments to or give notice on behalf of Claimants, or otherwise have any obligations to Claimants under this Bond.

11. The Surety hereby waives notice of any change, including changes of time, to the Construction Contract or to related subcontracts, purchase orders, and other obligations.

12. No suit or action will be commenced by a Claimant under this Bond other than in a court of competent jurisdiction in the state in which the project that is the subject of the Construction Contract is located or after the expiration of one year from the date (1) on which the Claimant sent a Claim to the Surety pursuant to Paragraph 5.1.2 or 5.2, or (2) on which the last labor or service was performed by anyone or the last materials or equipment were furnished by anyone under the Construction Contract, whichever of (1) or (2) first occurs. If the provisions of this paragraph are void or prohibited by law, the minimum period of limitation available to sureties as a defense in the jurisdiction of the suit will be applicable.

13. Notice and Claims to the Surety, the Owner, or the Contractor must be mailed or delivered to the address shown on the page on which their signature appears. Actual receipt of notice or Claims, however accomplished, will be sufficient compliance as of the date received.

14. When this Bond has been furnished to comply with a statutory or other legal requirement in the location where the construction was to be performed, any provision in this Bond conflicting with said statutory or legal requirement will be deemed deleted here from and provisions conforming to such statutory or other legal requirement will be deemed incorporated herein. When so furnished, the intent is that this Bond will be construed as a statutory bond and not as a common law bond.

15. Upon requests by any person or entity appearing to be a potential beneficiary of this Bond, the Contractor and Owner shall promptly furnish a copy of this Bond or shall permit a copy to be made.

16. Definitions

    16.1. *Claim*—A written statement by the Claimant including at a minimum:

        16.1.1. The name of the Claimant;

        16.1.2. The name of the person for whom the labor was done, or materials or equipment furnished;

        16.1.3. A copy of the agreement or purchase order pursuant to which labor, materials, or equipment was furnished for use in the performance of the Construction Contract;

        16.1.4. A brief description of the labor, materials, or equipment furnished;

Copyright© 2018 National Society of Professional Engineers, American Council of Engineering Companies, and American Society of Civil Engineers. All rights reserved.

16.1.5. The date on which the Claimant last performed labor or last furnished materials or equipment for use in the performance of the Construction Contract;

16.1.6. The total amount earned by the Claimant for labor, materials, or equipment furnished as of the date of the Claim;

16.1.7. The total amount of previous payments received by the Claimant; and

16.1.8. The total amount due and unpaid to the Claimant for labor, materials, or equipment furnished as of the date of the Claim.

16.2. *Claimant*—An individual or entity having a direct contract with the Contractor or with a subcontractor of the Contractor to furnish labor, materials, or equipment for use in the performance of the Construction Contract. The term Claimant also includes any individual or entity that has rightfully asserted a claim under an applicable mechanic's lien or similar statute against the real property upon which the Project is located. The intent of this Bond is to include without limitation in the terms of "labor, materials, or equipment" that part of the water, gas, power, light, heat, oil, gasoline, telephone service, or rental equipment used in the Construction Contract, architectural and engineering services required for performance of the work of the Contractor and the Contractor's subcontractors, and all other items for which a mechanic's lien may be asserted in the jurisdiction where the labor, materials, or equipment were furnished.

16.3. *Construction Contract*—The agreement between the Owner and Contractor identified on the cover page, including all Contract Documents and all changes made to the agreement and the Contract Documents.

16.4. *Owner Default*—Failure of the Owner, which has not been remedied or waived, to pay the Contractor as required under the Construction Contract or to perform and complete or comply with the other material terms of the Construction Contract.

16.5. *Contract Documents*—All the documents that comprise the agreement between the Owner and Contractor.

17. If this Bond is issued for an agreement between a contractor and subcontractor, the term Contractor in this Bond will be deemed to be Subcontractor and the term Owner will be deemed to be Contractor.

18. Modifications to this Bond are as follows: **[Describe modification or enter "None"]**

EJCDC® C-615, Payment Bond.
Copyright© 2018 National Society of Professional Engineers, American Council of Engineering Companies, and American Society of Civil Engineers. All rights reserved.

MAINTENANCE BOND

KNOW ALL MEN BY THESE PRESENTS, that we, _____, hereinafter called the Principal, and the _____ of, _____, a corporation duly organized under the laws of the State of _____, hereinafter called the Surety, as Surety, are held and firmly bound unto _____ _____, hereinafter call the Obligee, in the sum of _____ Dollars ($_____), for the payment of which sum well and truly to be made, the said Principal and the said Surety, bind ourselves, our heirs, executors, administrators, successors, and assigns, jointly and severally, firmly by these presents.

WHEREAS, said Principal entered into a written Contract with said Obligee dated _____, _____, for _____ _____, all in compliance with the plans and specifications therefor, made a part of said Contract and on file in the office of _____.

WHEREAS, this bond is given in compliance with Title 61, Oklahoma Statutes 2001, Section 113(B)(3).

NOW THEREFORE, if said Principal shall pay or cause to be paid to Obligee all damage, loss, and expense which may result by reason of defective materials and/or workmanship in connection with said work, occurring within a period of one (1) year after acceptance of said project by Obligee; and if Principal shall pay or cause to be paid all labor and materials, including the prime contractor and all subcontractors; and if Principal shall save and hold Obligee harmless from all damages, loss, and expense occasioned by, or resulting from, any failure whatsoever of said Principal, then this obligation shall be null and void, otherwise to be and remain in full force and effect.

It is further expressly agreed and understood by the parties hereto that no changes or alternations in said Contract and no deviations from the plan or mode of procedure herein fixed shall have the effect of releasing the sureties, or any of them, from the obligations of this Bond.

IN WITNESS WHEREOF, this instrument is executed in _____ counterparts, each of which shall be deemed an original, this _____ day of _____, _____.

(_____
(PRINCIPAL
(
_____ (BY: _____
WITNESS AS TO PRINCIPAL

(_____
(SURETY
(
_____ (BY: _____
WITNESS AS TO SURETY (ATTORNEY-IN-FACT

IMPORTANT: Surety companies executing bonds must appear on the Treasury Department's most current list (Circular 570 as amended) and be authorized to transact business in the State of Oklahoma. Attach a certified Copy of the Power of Attorney.

CERTIFICATE OF LIABILITY INSURANCE

DATE (MM/DD/YYYY)

PRODUCER FAX	**THIS CERTIFICATE IS ISSUED AS A MATTER OF INFORMATION ONLY AND CONFERS NO RIGHTS UPON THE CERTIFICATE HOLDER. THIS CERTIFICATE DOES NOT AMEND, EXTEND OR ALTER THE COVERAGE AFFORDED BY THE POLICIES BELOW.**	
	INSURERS AFFORDING COVERAGE	**NAIC #**
INSURED	INSURER A:	
	INSURER B:	
	INSURER C:	
	INSURER D:	
	INSURER E:	

COVERAGES

THE POLICIES OF INSURANCE LISTED BELOW HAVE BEEN ISSUED TO THE INSURED NAMED ABOVE FOR THE POLICY PERIOD INDICATED NOTWITHSTANDING ANY REQUIREMENT, TERM OR CONDITION OF ANY CONTRACT OR OTHER DOCUMENT WITH RESPECT TO WHICH THIS CERTIFICATE MAY BE ISSUED OR MAY PERTAIN, THE INSURANCE AFFORDED BY THE POLICIES DESCRIBED HEREIN IS SUBJECT OT ALL THE TERMS, EXCLUSIONS AND CONDITIONS OF SUCH POLICIES. AGGREGATE LIMITS SHOWN MAY HAVE BEEN REDUCED BY PAID CLAIMS.

INSR LTR	ADD'L INSRD	Type of Insurance	Policy Number	POLICY EFFECTIVE DATE (MM/DD/YY)	POLICY EXPIRATION DATE (MM/DD/YY)	LIMITS	
		GENERAL LIABILITY ☐ COMMERCIAL GENERAL LIABILITY ☐☐ CLAIMS MADE ☐ OCCUR ☐ _____ ☐ _____ GEN'L AGGREGATE LIMIT APPLIES PER ☐ POLICY ☐PROJECT ☐LOC				EACH OCCURRENCE	$
						DAMAGE TO RENTED PREMISES (Ea occurrence)	$
						MED EXP (Any one person)	$
						PERSONAL & ADV INJURY	$
						GENERAL AGGREGATE	$
						PRODUCTS – COMP/OP AGG	$
		AUTOMOBILE LIABILITY ☐ ANY AUTO ☐ ALL OWNED AUTOS ☐ SCHEDULED AUTOS ☐ HIRED AUTOS ☐ NON-OWNED AUTOS ☐ _____ ☐ _____				COMBINED SINGLE LIMIT (Ea accident)	$
						BODILY INJURY (Per person)	$
						BODILY INJURY (Per accident)	$
						PROPERTY DAMAGE (Per accident)	$
		GARAGE LIABILITY ☐ **ANY AUTO** ☐				AUTO ONLY – EA ACCIDENT	$
						OTHER THAN AUTO ONLY EA ACC	$
						AGG	$
		EXCESS/UMBRELLA LIABILITY ☐ OCCUR ☐ CLAIMS MADE ☐ DEDUCTIBLE ☐ RETENTION $				EACH OCCURRENCE	$
						AGGREGATE	$
							$
							$
							$
		WORKERS COMPENSATION AND EMPLOYERS' LIABILITY ANY PROPRIETOR/PARTNER/EXECUTIVE OFFICER/MEMBER EXCLUDED? If yes, describe under SPECIAL PROVISIONS below				☐ WC STATU-TORY LIMITS ☐ OTH-ER	
						E.L. EACH ACCIDENT	$
						E.L. DISEASE – EA EMPLOYEE	$
						E.L. DISEASE – POLICY LIMIT	$
		OTHER					

DESCRIPTION OF OPERATIONS / LOCATIONS / VEHICLES / EXCLUSIONS ADDED BY ENDORSEMENT / SPECIAL PROVISIONS

CERTIFICATE HOLDER

Shawnee Municipal Authority **16 West 9th Street** **Shawnee, OK 74801-6812**	SHOULD ANY OF THE ABOVE DESCRIBED POLICIES BE MATERIALLY CHANGED OR CANCELLED BEFORE THE EXPIRATION DATE THEREOF, THE ISSUING INSURER WILL GIVE 15 DAYS WRITTEN NOTICE TO THE CERTIFICATE HOLDER NAMED TO THE LEFT. AUTHORIZED REPRESENTATIVE

GUIDELINES FOR THE INTENDED USE OF EJCDC C-620, APPLICATION FOR PAYMENT

1.0 PURPOSE AND INTENDED USE OF THE DOCUMENT

The Application for Payment is used to facilitate periodic progress payments to the Contractor for Work completed and for stored materials and equipment (referred to in this document as "Stored Materials").

For additional information regarding the Application for Payment, see EJCDC® C–700, Standard General Conditions of the Construction Contract (2018), Paragraph 15.01, and EJCDC® C–001, Commentary on the 2018 EJCDC Construction Documents (2018).

2.0 APPLICATION FOR PAYMENT OVERVIEW

This document was prepared in Microsoft Excel due to the number of calculations involved in the preparation of the Application for Payment. The application consists of a Summary worksheet, and 3 supporting worksheets: Lump Sum worksheet, Unit Price worksheet, and Stored Materials worksheet.

2.1 *Summary Worksheet* — calculates the amount to be paid to the Contractor at the end of each Application for Payment period. This calculation imports numbers from the supporting worksheets to determine the value of the Work completed and Stored Materials, calculate retainage, and deduct amounts previously paid to determine the amount the Contractor should be paid for the current application period. Application periods are typically one month; however these periods may be extended when Contractor's efforts do not result in the billable completion of Work or storage of materials and equipment during the payment period.

2.2 *Lump Sum Worksheet* — calculates the total value for completed Work for which compensation is paid on a Lump Sum basis. The schedule of values included in this worksheet reflects a breakdown of lump sum Work items to which Contractor and Engineer have agreed, pursuant to Article 2 of the General Conditions. Costs for Stored Materials associated with lump sum items are included on this worksheet to calculate the total value for completed lump sum Work and associated Stored Materials. This total is exported to the Summary worksheet. Separate totals for Work Completed and for materials currently stored are also exported to the Summary worksheet for use in calculating the amount of retainage to be held for each.

2.3 *Unit Price Worksheet* — calculates the total value for completed Work for which compensation is paid on a Unit Price basis. The schedule of values included in this spreadsheet is typically a tabulation of Unit Price items from the Agreement. Costs for Stored Materials associated with unit price items are included in this worksheet to calculate the total value for completed Unit Price Work and associated Stored Materials. This total is exported to the Summary worksheet. Separate totals for Work Completed and for Materials Currently Stored are also exported to the Summary worksheet for use in calculating the amount of retainage to be held for each.

2.4 *Stored Materials Worksheet* — calculates the total value for materials and equipment that have been purchased and are being stored until they are incorporated into the Work. This worksheet adds materials and equipment to the worksheet as they are brought to the site and stored; such Stored Materials are then deducted from the Stored Materials worksheet total as they are incorporated into the Work, providing a running net value for the materials and equipment remaining in storage. The values of Stored Materials must be manually added to the Lump Sum or Unit Price line items. These do not automatically update when changes are made. The amount of materials remaining in storage is eligible for payment but must be tracked separately from Work completed since different retainage rates may apply to Work completed and Stored Materials.

3.0 Instructions for filling out the Payment Application form

3.1 Project-specific information is to be entered in the top portion (header) of the Summary worksheet. This same information will automatically be copied to the other worksheets to complete the headers on all other worksheets.

3.2 Outside of the header, data can be entered in non-shaded cells when the sheet is protected. Cells shaded light blue contain equations that will automatically transfer data from other cells or make calculations to complete the worksheet. Altering any of these cells can result in errors in the Application for Payment. It is recommended that the worksheets be protected at all times unless alterations are deliberately being made to the Application for Payment form other than to enter data. See Paragraph 4.0 below for information on Protection of Worksheets.

3.3 Enter information regarding each item in the Lump Sum and/or Unit Price worksheets. For Lump Sum projects, each item should represent an item in the schedule of values prepared by the Contractor and approved by the Engineer/Owner, breaking down the Lump Sum amount into measurable components. For Unit Price contracts, use numbers from the Agreement as the schedule of values. Specific information on the data to be entered into each column may be seen by clicking on the header description for that column. Similar comments may be seen for cells in the "Totals" row that indicates how the number is calculated and where this number is exported to another part of the spreadsheet. See the Commentary for additional information.

3.4 The equations in the Summary worksheet use numbers imported from both the Lump Sum and Unit Price worksheets. Projects will typically either use the Lump Sum or the Unit Price worksheet, but some projects may use both. If one of the worksheets is not used, it should be hidden and not deleted. If it is deleted, Users will need to correct the equations in the Summary worksheet by unprotecting the worksheet and editing the equations. To hide a worksheet, right click on the worksheet tab at the bottom of the worksheet and select "Hide." To unhide a worksheet, right click on any worksheet tab and select "Unhide," and then select the worksheet to unhide and click "Okay." This same process may be used to hide these Guidelines for Use.

3.5 EJCDC C-620 contains calculation functions that are provided solely for the convenience of the user. EJCDC and its Sponsoring Organizations do not warrant or guarantee the accuracy or completeness of any information generated by the calculator.

4.0 Protection of Worksheets

4.1 The cells in this Workbook that create the forms or contain equations have been coded to "lock" the cells that should not be altered. It is recommended that the Workbook be Protected (cells locked) at all times unless it is necessary to add or delete rows. Directions for adding and deleting rows are provided in the next section. Passwords can be used to lock the Protect / Unprotect settings on spreadsheets, however the worksheets in this workbook do not require a password.

4.2 To unprotect a worksheet, click on the "Review" menu tab at the top of Excel, then click "Unprotect Sheet." To protect a worksheet, click on the "Review" menu tab at the top of Excel, then click "Protect Sheet." This will open a dialog box in which the User is allowed to select protection options. It is recommended that only the top two checkboxes for "Select Locked Cells" and "Select Unlocked Cells" be checked. This will reset the protection for the Worksheet.

5.0 Adding and Deleting Rows

5.1 A limited number of blank rows are provided in the Lump Sum, Unit Price, and Stored Material worksheets. Additional rows may be added to these worksheets by the User. The first step in this process is to unprotect the worksheet as previously discussed. After the sheet is unprotected, move with caution to prevent inadvertently deleting any cells that contain equations. To insert a row, right click in the row heading at the left of the spreadsheet and select "Insert." A new row will be inserted at the location where the cursor was placed in the row heading. If more than one new row is desired, left click and drag the cursor to include the desired number of rows, right click in the selected row headings and then select "Insert." It is important that the line immediately above the "Totals" row not be included in the rows selected. Doing so will require that equations in the "Totals" row be adjusted. When rows are inserted, Excel automatically adjusts the equations to include the new rows, unless the row directly above the "Totals" row is also selected.

5.2 After new rows are inserted, it is important to copy a line from one of the original rows so correct formatting and equations are copied into each new row. To do this, select the row to be copied by clicking the cell in Column A and dragging the cursor to the last column in the table. Then select "Copy" from the menu or type CTRL+C to copy the cells. Excel will show that this row has been copied by showing a moving dashed line around the cells that are to be copied. Then select the new rows into which the information is to be copied as before and select Paste from the menu or type CTRL+V.

5.3 To delete an unused row, right click in the row heading on the left of the spreadsheet for the row to be deleted and select "Delete." The selected row will be deleted. If more than one row is to be deleted, left click and drag the cursor to the desired number of rows to be deleted and then right click to open the menu and select "Delete." Unlike the admonition on adding new rows, it is okay to delete the row just above the "Totals" row.

5.4 After rows have been added or deleted, it is important reset the worksheet protection.

6.0 Saving Files

This file is provided as a Microsoft ® Excel Open XML workbook template (.xltx) to prevent this file from being inadvertently changed. When an application for payment is created for a specific project it should be saved as an Excel workbook (.xlxs) file. To do this, select Save As (F12), type in a new file name and select Excel Workbook (.xlxs) from the drop down Save As Type menu.

7.0 License Agreement

This document is subject to the terms and conditions of the License Agreement, 2018 EJCDC® Construction Series Documents. A copy of the License Agreement was furnished at the time of purchase of this document, and is available for review at www.ejcdc.org and the websites of EJCDC's sponsoring organizations.

Contractor's Application for Payment

Owner:	Shawnee Municipal Authority	**Owner's Project No.:**	SHN-20-01
Engineer:	Wall Engineering, LLC	**Engineer's Project No.:**	SHN-20-01
Contractor:		**Contractor's Project No.:**	SHN-20-01
Project:	Wastewater System Improvements		
Contract:			
Application No.:		**Application Date:**	
Application Period:	**From**	**to**	

1. Original Contract Price		$ -
2. Net change by Change Orders		$ -
3. Current Contract Price (Line 1 + Line 2)		$ -
4. Total Work completed and materials stored to date (Sum of Column G Lump Sum Total and Column J Unit Price Total)		$ -
5. Retainage		
a. _____ X $ - Work Completed =	$ -	
b. _____ X $ - Stored Materials =	$ -	
c. Total Retainage (Line 5.a + Line 5.b)		$ -
6. Amount eligible to date (Line 4 - Line 5.c)		$ -
7. Less previous payments (Line 6 from prior application)		
8. Amount due this application		$ -
9. Balance to finish, including retainage (Line 3 - Line 4 + Line 5.c)		$ -

Contractor's Certification

The undersigned Contractor certifies, to the best of its knowledge, the following:
(1) All previous progress payments received from Owner on account of Work done under the Contract have been applied on account to discharge Contractor's legitimate obligations incurred in connection with the Work covered by prior Applications for Payment;
(2) Title to all Work, materials and equipment incorporated in said Work, or otherwise listed in or covered by this Application for Payment, will pass to Owner at time of payment free and clear of all liens, security interests, and encumbrances (except such as are covered by a bond acceptable to Owner indemnifying Owner against any such liens, security interest, or encumbrances); and
(3) All the Work covered by this Application for Payment is in accordance with the Contract Documents and is not defective.

Contractor: _____

Signature: _____ **Date:** _____

Recommended by Engineer		**Approved by Owner**	
By:		**By:**	
Title:		**Title:**	
Date:		**Date:**	
Approved by Funding Agency			
By:		**By:**	
Title:		**Title:**	
Date:		**Date:**	

(c) 2018 National Society of Professional Engineers for EJCDC. All rights reserved.

Progress Estimate - Lump Sum Work

Contractor's Application for Payment

Owner:	Shawnee Municipal Authority	**Owner's Project No.:**	SHN-20-01
Engineer:	Wall Engineering, LLC	**Engineer's Project No.:**	SHN-20-01
Contractor:		**Contractor's Project No.:**	SHN-20-01
Project:	Wastewater System Improvements		
Contract:			

Application No.: _____ **Application Period:** **From** _____ **to** _____ **Application Date:** _____

A	B	C	D	E	F	G	H	I
			Work Completed					
Item No.	Description	Scheduled Value ($)	(D + E) From Previous Application ($)	This Period ($)	Materials Currently Stored (not in D or E) ($)	Work Completed and Materials Stored to Date (D + E + F) ($)	% of Scheduled Value (G / C) (%)	Balance to Finish (C - G) ($)
Original Contract								
						-		-
						-		-
						-		-
						-		-
						-		-
						-		-
						-		-
						-		-
						-		-
						-		-
						-		-
						-		-
						-		-
						-		-
						-		-
						-		-
						-		-
						-		-
						-		-
						-		-
	Original Contract Totals	$ -	$ -	$ -	$ -	$ -		$ -

EJCDC C-620 Contractor's Application for Payment
(c) 2018 National Society of Professional Engineers for EJCDC. All rights reserved.

Progress Estimate - Unit Price Work

Contractor's Application for Payment

Owner:	Shawnee Municipal Authority	**Owner's Project No.:**	SHN-20-01
Engineer:	Wall Engineering, LLC	**Engineer's Project No.:**	SHN-20-01
Contractor:		**Contractor's Project No.:**	SHN-20-01
Project:	Wastewater System Improvements		
Contract:			

Application No.: _____ **Application Period:** **From** _____ **to** _____ **Application Date:** _____

A	B	C	D	E	F	G	H	I	J	K	L
		Contract Information				Work Completed					
Bid Item No.	Description	Item Quantity	Units	Unit Price ($)	Value of Bid Item (C X E) ($)	Estimated Quantity Incorporated in the Work	Value of Work Completed to Date (E X G) ($)	Materials Currently Stored (not in G) ($)	Work Completed and Materials Stored to Date (H + I) ($)	% of Value of Item (J / F) (%)	Balance to Finish (F - J) ($)
Original Contract											
					-		-		-		-
					-		-		-		-
					-		-		-		-
					-		-		-		-
					-		-		-		-
					-		-		-		-
					-		-		-		-
					-		-		-		-
					-		-		-		-
					-		-		-		-
					-		-		-		-
					-		-		-		-
					-		-		-		-
					-		-		-		-
					-		-		-		-
					-		-		-		-
					-		-		-		-
					-		-		-		-
					-		-		-		-
					-		-		-		-
					-		-		-		-
				Original Contract Totals	$ -		$ -	$ -	$ -		$ -

EJCDC C-620 Contractor's Application for Payment
(c) 2018 National Society of Professional Engineers for EJCDC. All rights reserved.

Stored Materials Summary

Contractor's Application for Payment

Owner:	Shawnee Municipal Authority	**Owner's Project No.:**	SHN-20-01
Engineer:	Wall Engineering, LLC	**Engineer's Project No.:**	SHN-20-01
Contractor:		**Contractor's Project No.:**	SHN-20-01
Project:	Wastewater System Improvements		
Contract:			

Application No.: _____ **Application Period:** From _____ to _____ **Application Date:** _____

A	B	C	D	E	F	G	H	I	J	K	L	M
						Materials Stored			Incorporated in Work			
Item No. (Lump Sum Tab) or Bid Item No. (Unit Price Tab)	Supplier Invoice No.	Submittal No. (with Specification Section No.)	Description of Materials or Equipment Stored	Storage Location	Application No. When Materials Placed in Storage	Previous Amount Stored ($)	Amount Stored this Period ($)	Amount Stored to Date (G+H) ($)	Amount Previously Incorporated in the Work ($)	Amount Incorporated in the Work this Period ($)	Total Amount Incorporated in the Work (J+K) ($)	Materials Remaining in Storage (I-L) ($)
								-			-	-
								-			-	-
								-			-	-
								-			-	-
								-			-	-
								-			-	-
								-			-	-
								-			-	-
								-			-	-
								-			-	-
								-			-	-
								-			-	-
								-			-	-
								-			-	-
								-			-	-
								-			-	-
								-			-	-
								-			-	-
								-			-	-
								-			-	-
								-			-	-
					Totals	$ -	$ -	$ -	$ -	$ -	$ -	$ -

EJCDC C-620 Contractor's Application for Payment
(c) 2018 National Society of Professional Engineers for EJCDC. All rights reserved.

INVOICE AFFIDAVIT

(This form shall accompany the Contractor's Application for Payment)

STATE OF _____)
) ss.
COUNTY OF _____)

The undersigned _____, of lawful age, being first duly sworn, on oath says that this (invoice, claim, or contract) is true and correct. Affiant further states that the work, services and/or materials as shown by this invoice or claim have been completed and/or supplied in accordance with the plans, specifications, orders, or requests furnished to the affiant. Affiant further states that he has made no payment, given, or donated or agreed to pay, give, or donate, either directly or indirectly, to any elected official, officer, or employee of the State, of money or any other thing of value to obtain payment or the award of this contract.

_____
Contractor

_____
Type or Print Name

_____
Title

Subscribed and sworn to before me this_____day of_____, 20_____.

Place Seal Here

_____
Notary Public

My Commission Expires:_____

☐ **Request for Information No. _____**
☐ **Request for Clarification No. _____**

Project Name: Wastewater System Improvements	Date:
Owner: Shawnee Municipal Authority	Project No.: SHN-20-01

Requested By: (Name)

Contractor: (Company)

Specification Section or Plan Sheet Reference:

INFORMATION REQUESTED:

RESPONSE:

ANSWERED BY:

Wall Engineering Project Manager (Date)

FIELD ORDER NO.: [Number of Field Order]

Owner: Shawnee Municipal Authority
Engineer: Wall Engineering, LLC
Contractor:
Project: Wastewater System Improvements
Project No.: SHN-20-01
Date Issued:
Effective Date:

Contractor is hereby directed to promptly perform the Work described in this Field Order, issued in accordance with Paragraph 11.04 of the General Conditions, for minor changes in the Work without changes in Contract Price or Contract Times. If Contractor considers that a change in Contract Price or Contract Times is required, submit a Change Proposal before proceeding with this Work.

Reference:

Specification Section(s):

Drawing(s) / Details (s):

Description:

[Description of the change to the Work]

Attachments:

[List documents supporting change]

Issued by Wall Engineering, LLC

By: _____

Title: _____

Date: _____

EJCDC® C-942, Field Order.
Copyright© 2018 National Society of Professional Engineers, American Council of Engineering Companies and American Society of Civil Engineers. All rights reserved.

WORK CHANGE DIRECTIVE NO.: [Number of Work Change Directive]

Owner: Shawnee Municipal Authority
Engineer: Wall Engineering, LLC
Contractor:
Project: Wastewater System Improvements
Project No.: SHN-20-01
Date Issued:
Effective Date:

Contractor is directed to proceed promptly with the following change(s):

Description:

[Description of the change to the Work]

Attachments:

[List documents related to the change to the Work]

Purpose for the Work Change Directive:

[Describe the purpose for the change to the Work]

Directive to proceed promptly with the Work described herein, prior to agreeing to change in Contract Price and Contract Time, is issued due to:

Notes to User—Check one or both of the following

☐ Non-agreement on pricing of proposed change. ☐ Necessity to proceed for schedule or other reasons.

Estimated Change in Contract Price and Contract Times (non-binding, preliminary):

Contract Price: $ _____ **[increase] [decrease] [not yet estimated]**.

Contract Time: _____ days **[increase] [decrease] [not yet estimated]**.

Basis of estimated change in Contract Price:

☐ Lump Sum ☐ Unit Price ☐ Cost of the Work ☐ Other

	Recommended by Engineer	Authorized by Owner
By:		
Title:		
Date:		

EJCDC® C-940, Work Change Directive.
Copyright© 2018 National Society of Professional Engineers, American Council of Engineering Companies, and American Society of Civil Engineers. All rights reserved.

CHANGE ORDER NO.: [Number of Change Order]

Owner: Shawnee Municipal Authority
Engineer: Wall Engineering, LLC
Contractor:
Project: Wastewater System Improvements
Project No.: SHN-20-01
Date Issued:
Effective Date:

The Contract is modified as follows upon execution of this Change Order:

Description:

[Description of the change]

Attachments:

[List documents related to the change]

Change in Contract Price	**Change in Contract Times**
Original Contract Price: $ _____	Original Contract Times: Substantial Completion: _____ Ready for final payment: _____
[Increase] [Decrease] from previously approved Change Orders No. 1 to No. **[Number of previous Change Order]**: $ _____	**[Increase] [Decrease]** from previously approved Change Orders No.1 to No. **[Number of previous Change Order]**: Substantial Completion: _____ Ready for final payment: _____
Contract Price prior to this Change Order: $ _____	Contract Times prior to this Change Order: Substantial Completion: _____ Ready for final payment: _____
[Increase] [Decrease] this Change Order: $ _____	**[Increase] [Decrease]** this Change Order: Substantial Completion: _____ Ready for final payment: _____
Contract Price incorporating this Change Order: $ _____	Contract Times with all approved Change Orders: Substantial Completion: _____ Ready for final payment: _____

Recommended by Engineer	Authorized by Owner
By: _____	_____
Title: Brandon Wall, P.E. – Wall Engineering	_____
Date: _____	_____

Authorized by Owner	Approved by Funding Agency (if applicable)
By: _____	_____
Title: _____	_____
Date: _____	_____

EJCDC® C-941, Change Order.
Copyright© 2018 National Society of Professional Engineers, American Council of Engineering Companies and American Society of Civil Engineers. All rights reserved.

CERTIFICATE OF APPROVAL OF CONTRACTS AND BONDS BY LOCAL ATTORNEY

I, the undersigned _____,

the duly authorized and acting legal representative of the _____,

after careful examination of the Contract between this Entity and

_____, and the surety bonds given by the contractor in

connection with the performance of said contract, do hereby certify that:

1. Each of the aforesaid agreements has been duly executed by the proper parties thereto, acting through their duly authorized representatives.

2. Said representatives have full power and authority to execute said agreements on behalf of the respective parties named therein.

3. The foregoing contract and surety bonds, as applicable, constitute valid and legally binding obligations upon the parties executing the same in accordance with the terms, conditions, and provisions thereof.

Dated this ___ day of _____, 20___.

_____

Attorney's signature

CERTIFICATE OF SUBSTANTIAL COMPLETION

Owner: Shawnee Municipal Authority
Engineer: Wall Engineering, LLC
Contractor:
Project: Wastewater System Improvements
Date Issued:
This ☐ Preliminary ☐ Final Certificate of Substantial Completion applies to:

☐ All Work ☐ The following specified portions of the Work:

[Describe the portion of the work for which Certificate of Substantial Completion is issued]

Date of Substantial Completion: **[Enter date, as determined by Engineer]**

The Work to which this Certificate applies has been inspected by authorized representatives of Owner, Contractor, and Engineer, and found to be substantially complete. The Date of Substantial Completion of the Work or portion thereof designated above is hereby established, subject to the provisions of the Contract pertaining to Substantial Completion. The date of Substantial Completion in the final Certificate of Substantial Completion marks the commencement of the contractual correction period and applicable warranties required by the Contract.

A punch list of items to be completed or corrected is attached to this Certificate. This list may not be all-inclusive, and the failure to include any items on such list does not alter the responsibility of the Contractor to complete all Work in accordance with the Contract Documents.

Amendments of contractual responsibilities recorded in this Certificate should be the product of mutual agreement of Owner and Contractor; see Paragraph 15.03.D of the General Conditions.

The responsibilities between Owner and Contractor for security, operation, safety, maintenance, heat, utilities, insurance, and warranties upon Owner's use or occupancy of the Work must be as provided in the Contract, except as amended as follows:

Amendments to Owner's Responsibilities: ☐ None ☐ As follows:

[List amendments to Owner's Responsibilities]

Amendments to Contractor's Responsibilities: ☐ None ☐ As follows:

[List amendments to Contractor's Responsibilities]

The following documents are attached to and made a part of this Certificate:

[List attachments such as punch list; other documents]

This Certificate does not constitute an acceptance of Work not in accordance with the Contract Documents, nor is it a release of Contractor's obligation to complete the Work in accordance with the Contract Documents.

Engineer

By *(signature)*: _____

Name *(printed)*: _____

Title: _____

EJCDC® C-625, Certificate of Substantial Completion.
Copyright© 2018 National Society of Professional Engineers, American Council of Engineering Companies, and American Society of Civil Engineers. All rights reserved.

NOTICE OF ACCEPTABILITY OF WORK

Owner: Shawnee Municipal Authority
Engineer: Wall Engineering, LLC
Contractor:
Project: Wastewater System Improvements
Project No.: SHN-20-01
Date Issued:

The Engineer hereby gives notice to the Owner and Contractor that Engineer recommends final payment to Contractor, and that the Work furnished and performed by Contractor under the Construction Contract is acceptable, expressly subject to the provisions of the Construction Contract's Contract Documents ("Contract Documents") and of the Agreement between Owner and Engineer for Professional Services dated **[date of professional services agreement]** ("Owner-Engineer Agreement"). This Notice of Acceptability of Work (Notice) is made expressly subject to the following terms and conditions to which all who receive and rely on said Notice agree:

1. This Notice has been prepared with the skill and care ordinarily used by members of the engineering profession practicing under similar conditions at the same time and in the same locality.
2. This Notice reflects and is an expression of the Engineer's professional opinion.
3. This Notice has been prepared to the best of Engineer's knowledge, information, and belief as of the Notice Date.
4. This Notice is based entirely on and expressly limited by the scope of services Engineer has been employed by Owner to perform or furnish during construction of the Project (including observation of the Contractor's Work) under the Owner-Engineer Agreement, and applies only to facts that are within Engineer's knowledge or could reasonably have been ascertained by Engineer as a result of carrying out the responsibilities specifically assigned to Engineer under such Owner-Engineer Agreement.
5. This Notice is not a guarantee or warranty of Contractor's performance under the Construction Contract, an acceptance of Work that is not in accordance with the Contract Documents, including but not limited to defective Work discovered after final inspection, nor an assumption of responsibility for any failure of Contractor to furnish and perform the Work thereunder in accordance with the Contract Documents, or to otherwise comply with the Contract Documents or the terms of any special guarantees specified therein.
6. This Notice does not relieve Contractor of any surviving obligations under the Construction Contract, and is subject to Owner's reservations of rights with respect to completion and final payment.

Engineer

By *(signature)*: _____

Name *(printed)*: _____

Title: _____

EJCDC® C-626, Notice of Acceptability of Work.
Copyright© 2018 National Society of Professional Engineers, American Council of Engineering Companies, and American Society of Civil Engineers. All rights reserved.

RELEASE OF CLAIMANTS

Date: ____/____/_____

Project Name: Shawnee Municipal Authority - Wastewater System Improvements

To Whom it May Concern,

I hereby acknowledge receipt of _____

Dollars ($_____) in full payment of my contracted date ____/____/_____, for improvement work which I did for you and which is described in my contract.

I Certify that I have paid in full for all materials purchased and all labor employed in the performance of this contract and that there are no claims against me as an employer under this contract on account of injuries sustained by workmen employed by me thereunder. I hereby release you from any claims arising by virtue of this contract.

WARNING

The making of any false statement or misrepresentation herein may be a crime punishable under Title 18 U.S.C. Section 1001 which provides in part: "Whoever, in any matter within the jurisdiction of any department or agency of the United States knowingly and willfully...makes false representation, or makes or uses any false writing or document knowing the same to contain any false fictitious or fraudulent statement or entry, shall be fined not more than $10,000.00 or imprisoned not more than five years, or both."

Sincerely,

_____

[Name Printed]

_____

[Signature]

_____

[Title]

Property Owner's Release Form

I, _____
(Print Name of Property Owner)

attest that the property known as _____

_____
(Address or Legal Description)

has been left in acceptable condition and do hereby release _____

_____
(Project Owner)

from any and all claims related to work performed on said property.

Property Owner: Shawnee Municipal Authority

_____
(Signature)

_____
(Date)

Witness:

_____
(Signature)

STANDARD GENERAL CONDITIONS OF THE CONSTRUCTION CONTRACT

TABLE OF CONTENTS

Page

Article 1—Definitions and Terminology 1
1.01 Defined Terms 1
1.02 Terminology 6
Article 2—Preliminary Matters 7
2.01 Delivery of Performance and Payment Bonds; Evidence of Insurance 7
2.02 Copies of Documents 7
2.03 Before Starting Construction 7
2.04 Preconstruction Conference; Designation of Authorized Representatives 8
2.05 Acceptance of Schedules 8
2.06 Electronic Transmittals 8
Article 3—Contract Documents: Intent, Requirements, Reuse 9
3.01 Intent 9
3.02 Reference Standards 9
3.03 Reporting and Resolving Discrepancies 10
3.04 Requirements of the Contract Documents 10
3.05 Reuse of Documents 11
Article 4—Commencement and Progress of the Work 11
4.01 Commencement of Contract Times; Notice to Proceed 11
4.02 Starting the Work 11
4.03 Reference Points 11
4.04 Progress Schedule 12
4.05 Delays in Contractor's Progress 12
Article 5—Site; Subsurface and Physical Conditions; Hazardous Environmental Conditions 13
5.01 Availability of Lands 13
5.02 Use of Site and Other Areas 14
5.03 Subsurface and Physical Conditions 15
5.04 Differing Subsurface or Physical Conditions 16

**EJCDC® C-700, Standard General Conditions of the Construction Contract.
Copyright© 2018 National Society of Professional Engineers, American Council of Engineering Companies, and American Society of Civil Engineers. All rights reserved.**

5.05 Underground Facilities 17
5.06 Hazardous Environmental Conditions at Site 19
Article 6—Bonds and Insurance 21
6.01 Performance, Payment, and Other Bonds 21
6.02 Insurance—General Provisions 22
6.03 Contractor's Insurance 24
6.04 Builder's Risk and Other Property Insurance 25
6.05 Property Losses; Subrogation 25
6.06 Receipt and Application of Property Insurance Proceeds 27
Article 7—Contractor's Responsibilities 27
7.01 Contractor's Means and Methods of Construction 27
7.02 Supervision and Superintendence 27
7.03 Labor; Working Hours 27
7.04 Services, Materials, and Equipment 28
7.05 "Or Equals" 28
7.06 Substitutes 29
7.07 Concerning Subcontractors and Suppliers 31
7.08 Patent Fees and Royalties 32
7.09 Permits 33
7.10 Taxes 33
7.11 Laws and Regulations 33
7.12 Record Documents 33
7.13 Safety and Protection 34
7.14 Hazard Communication Programs 35
7.15 Emergencies 35
7.16 Submittals 35
7.17 Contractor's General Warranty and Guarantee 38
7.18 Indemnification 39
7.19 Delegation of Professional Design Services 39
Article 8—Other Work at the Site 40
8.01 Other Work 40
8.02 Coordination 41
8.03 Legal Relationships 41

Copyright© 2018 National Society of Professional Engineers, American Council of Engineering Companies, and American Society of Civil Engineers. All rights reserved.

Article 9—Owner's Responsibilities 42
9.01 Communications to Contractor 42
9.02 Replacement of Engineer 42
9.03 Furnish Data 42
9.04 Pay When Due 42
9.05 Lands and Easements; Reports, Tests, and Drawings 43
9.06 Insurance 43
9.07 Change Orders 43
9.08 Inspections, Tests, and Approvals 43
9.09 Limitations on Owner's Responsibilities 43
9.10 Undisclosed Hazardous Environmental Condition 43
9.11 Evidence of Financial Arrangements 43
9.12 Safety Programs 43
Article 10—Engineer's Status During Construction 44
10.01 Owner's Representative 44
10.02 Visits to Site 44
10.03 Resident Project Representative 44
10.04 Engineer's Authority 44
10.05 Determinations for Unit Price Work 45
10.06 Decisions on Requirements of Contract Documents and Acceptability of Work 45
10.07 Limitations on Engineer's Authority and Responsibilities 45
10.08 Compliance with Safety Program 45
Article 11—Changes to the Contract 46
11.01 Amending and Supplementing the Contract 46
11.02 Change Orders 46
11.03 Work Change Directives 46
11.04 Field Orders 47
11.05 Owner-Authorized Changes in the Work 47
11.06 Unauthorized Changes in the Work 47
11.07 Change of Contract Price 47
11.08 Change of Contract Times 49
11.09 Change Proposals 49
11.10 Notification to Surety 50

Copyright© 2018 National Society of Professional Engineers, American Council of Engineering Companies, and American Society of Civil Engineers. All rights reserved.

Article 12—Claims 50
12.01 Claims 50
Article 13—Cost of the Work; Allowances; Unit Price Work 51
13.01 Cost of the Work 51
13.02 Allowances 55
13.03 Unit Price Work 55
Article 14—Tests and Inspections; Correction, Removal, or Acceptance of Defective Work 56
14.01 Access to Work 56
14.02 Tests, Inspections, and Approvals 56
14.03 Defective Work 57
14.04 Acceptance of Defective Work 58
14.05 Uncovering Work 58
14.06 Owner May Stop the Work 58
14.07 Owner May Correct Defective Work 59
Article 15—Payments to Contractor; Set-Offs; Completion; Correction Period 59
15.01 Progress Payments 59
15.02 Contractor's Warranty of Title 62
15.03 Substantial Completion 62
15.04 Partial Use or Occupancy 63
15.05 Final Inspection 64
15.06 Final Payment 64
15.07 Waiver of Claims 65
15.08 Correction Period 66
Article 16—Suspension of Work and Termination 67
16.01 Owner May Suspend Work 67
16.02 Owner May Terminate for Cause 67
16.03 Owner May Terminate for Convenience 68
16.04 Contractor May Stop Work or Terminate 68
Article 17—Final Resolution of Disputes 69
17.01 Methods and Procedures 69
Article 18—Miscellaneous 69
18.01 Giving Notice 69
18.02 Computation of Times 69

Copyright© 2018 National Society of Professional Engineers, American Council of Engineering Companies, and American Society of Civil Engineers. All rights reserved.

18.03 Cumulative Remedies 70
18.04 Limitation of Damages 70
18.05 No Waiver 70
18.06 Survival of Obligations 70
18.07 Controlling Law 70
18.08 Assignment of Contract 70
18.09 Successors and Assigns 70
18.10 Headings 70

Copyright© 2018 National Society of Professional Engineers, American Council of Engineering Companies, and American Society of Civil Engineers. All rights reserved.

STANDARD GENERAL CONDITIONS OF THE CONSTRUCTION CONTRACT

ARTICLE 1—DEFINITIONS AND TERMINOLOGY

1.01 *Defined Terms*

A. Wherever used in the Bidding Requirements or Contract Documents, a term printed with initial capital letters, including the term's singular and plural forms, will have the meaning indicated in the definitions below. In addition to terms specifically defined, terms with initial capital letters in the Contract Documents include references to identified articles and paragraphs, and the titles of other documents or forms.

1. *Addenda*—Written or graphic instruments issued prior to the opening of Bids which clarify, correct, or change the Bidding Requirements or the proposed Contract Documents.

2. *Agreement*—The written instrument, executed by Owner and Contractor, that sets forth the Contract Price and Contract Times, identifies the parties and the Engineer, and designates the specific items that are Contract Documents.

3. *Application for Payment*—The document prepared by Contractor, in a form acceptable to Engineer, to request progress or final payments, and which is to be accompanied by such supporting documentation as is required by the Contract Documents.

4. *Bid*—The offer of a Bidder submitted on the prescribed form setting forth the prices for the Work to be performed.

5. *Bidder*—An individual or entity that submits a Bid to Owner.

6. *Bidding Documents*—The Bidding Requirements, the proposed Contract Documents, and all Addenda.

7. *Bidding Requirements*—The Advertisement or invitation to bid, Instructions to Bidders, Bid Bond or other Bid security, if any, the Bid Form, and the Bid with any attachments.

8. *Change Order*—A document which is signed by Contractor and Owner and authorizes an addition, deletion, or revision in the Work or an adjustment in the Contract Price or the Contract Times, or other revision to the Contract, issued on or after the Effective Date of the Contract.

9. *Change Proposal*—A written request by Contractor, duly submitted in compliance with the procedural requirements set forth herein, seeking an adjustment in Contract Price or Contract Times; contesting an initial decision by Engineer concerning the requirements of the Contract Documents or the acceptability of Work under the Contract Documents; challenging a set-off against payments due; or seeking other relief with respect to the terms of the Contract.

10. *Claim*

a. A demand or assertion by Owner directly to Contractor, duly submitted in compliance with the procedural requirements set forth herein, seeking an adjustment of Contract Price or Contract Times; contesting an initial decision by Engineer concerning the

EJCDC® C-700, Standard General Conditions of the Construction Contract.
Copyright© 2018 National Society of Professional Engineers, American Council of Engineering Companies, and American Society of Civil Engineers. All rights reserved.

requirements of the Contract Documents or the acceptability of Work under the Contract Documents; contesting Engineer's decision regarding a Change Proposal; seeking resolution of a contractual issue that Engineer has declined to address; or seeking other relief with respect to the terms of the Contract.

b. A demand or assertion by Contractor directly to Owner, duly submitted in compliance with the procedural requirements set forth herein, contesting Engineer's decision regarding a Change Proposal, or seeking resolution of a contractual issue that Engineer has declined to address.

c. A demand or assertion by Owner or Contractor, duly submitted in compliance with the procedural requirements set forth herein, made pursuant to Paragraph 12.01.A.4, concerning disputes arising after Engineer has issued a recommendation of final payment.

d. A demand for money or services by a third party is not a Claim.

11. *Constituent of Concern*—Asbestos, petroleum, radioactive materials, polychlorinated biphenyls (PCBs), lead-based paint (as defined by the HUD/EPA standard), hazardous waste, and any substance, product, waste, or other material of any nature whatsoever that is or becomes listed, regulated, or addressed pursuant to Laws and Regulations regulating, relating to, or imposing liability or standards of conduct concerning, any hazardous, toxic, or dangerous waste, substance, or material.

12. *Contract*—The entire and integrated written contract between Owner and Contractor concerning the Work.

13. *Contract Documents*—Those items so designated in the Agreement, and which together comprise the Contract.

14. *Contract Price*—The money that Owner has agreed to pay Contractor for completion of the Work in accordance with the Contract Documents.

15. *Contract Times*—The number of days or the dates by which Contractor shall: (a) achieve Milestones, if any; (b) achieve Substantial Completion; and (c) complete the Work.

16. *Contractor*—The individual or entity with which Owner has contracted for performance of the Work.

17. *Cost of the Work*—See Paragraph 13.01 for definition.

18. *Drawings*—The part of the Contract that graphically shows the scope, extent, and character of the Work to be performed by Contractor.

19. *Effective Date of the Contract*—The date, indicated in the Agreement, on which the Contract becomes effective.

20. *Electronic Document*—Any Project-related correspondence, attachments to correspondence, data, documents, drawings, information, or graphics, including but not limited to Shop Drawings and other Submittals, that are in an electronic or digital format.

21. *Electronic Means*—Electronic mail (email), upload/download from a secure Project website, or other communications methods that allow: (a) the transmission or communication of Electronic Documents; (b) the documentation of transmissions, including sending and receipt; (c) printing of the transmitted Electronic Document by the

EJCDC® C-700, Standard General Conditions of the Construction Contract.
Copyright© 2018 National Society of Professional Engineers, American Council of Engineering Companies, and American Society of Civil Engineers. All rights reserved.

recipient; (d) the storage and archiving of the Electronic Document by sender and recipient; and (e) the use by recipient of the Electronic Document for purposes permitted by this Contract. Electronic Means does not include the use of text messaging, or of Facebook, Twitter, Instagram, or similar social media services for transmission of Electronic Documents.

22. *Engineer*—The individual or entity named as such in the Agreement.

23. *Field Order*—A written order issued by Engineer which requires minor changes in the Work but does not change the Contract Price or the Contract Times.

24. *Hazardous Environmental Condition*—The presence at the Site of Constituents of Concern in such quantities or circumstances that may present a danger to persons or property exposed thereto.

    a. The presence at the Site of materials that are necessary for the execution of the Work, or that are to be incorporated into the Work, and that are controlled and contained pursuant to industry practices, Laws and Regulations, and the requirements of the Contract, is not a Hazardous Environmental Condition.

    b. The presence of Constituents of Concern that are to be removed or remediated as part of the Work is not a Hazardous Environmental Condition.

    c. The presence of Constituents of Concern as part of the routine, anticipated, and obvious working conditions at the Site, is not a Hazardous Environmental Condition.

25. *Laws and Regulations; Laws or Regulations*—Any and all applicable laws, statutes, rules, regulations, ordinances, codes, and binding decrees, resolutions, and orders of any and all governmental bodies, agencies, authorities, and courts having jurisdiction.

26. *Liens*—Charges, security interests, or encumbrances upon Contract-related funds, real property, or personal property.

27. *Milestone*—A principal event in the performance of the Work that the Contract requires Contractor to achieve by an intermediate completion date, or by a time prior to Substantial Completion of all the Work.

28. *Notice of Award*—The written notice by Owner to a Bidder of Owner's acceptance of the Bid.

29. *Notice to Proceed*—A written notice by Owner to Contractor fixing the date on which the Contract Times will commence to run and on which Contractor shall start to perform the Work.

30. *Owner*—The individual or entity with which Contractor has contracted regarding the Work, and which has agreed to pay Contractor for the performance of the Work, pursuant to the terms of the Contract.

31. *Progress Schedule*—A schedule, prepared and maintained by Contractor, describing the sequence and duration of the activities comprising Contractor's plan to accomplish the Work within the Contract Times.

32. *Project*—The total undertaking to be accomplished for Owner by engineers, contractors, and others, including planning, study, design, construction, testing, commissioning, and start-up, and of which the Work to be performed under the Contract Documents is a part.

EJCDC® C-700, Standard General Conditions of the Construction Contract.
Copyright© 2018 National Society of Professional Engineers, American Council of Engineering Companies, and American Society of Civil Engineers. All rights reserved.

33. *Resident Project Representative*—The authorized representative of Engineer assigned to assist Engineer at the Site. As used herein, the term Resident Project Representative (RPR) includes any assistants or field staff of Resident Project Representative.

34. *Samples*—Physical examples of materials, equipment, or workmanship that are representative of some portion of the Work and that establish the standards by which such portion of the Work will be judged.

35. *Schedule of Submittals*—A schedule, prepared and maintained by Contractor, of required submittals and the time requirements for Engineer's review of the submittals.

36. *Schedule of Values*—A schedule, prepared and maintained by Contractor, allocating portions of the Contract Price to various portions of the Work and used as the basis for reviewing Contractor's Applications for Payment.

37. *Shop Drawings*—All drawings, diagrams, illustrations, schedules, and other data or information that are specifically prepared or assembled by or for Contractor and submitted by Contractor to illustrate some portion of the Work. Shop Drawings, whether approved or not, are not Drawings and are not Contract Documents.

38. *Site*—Lands or areas indicated in the Contract Documents as being furnished by Owner upon which the Work is to be performed, including rights-of-way and easements, and such other lands or areas furnished by Owner which are designated for the use of Contractor.

39. *Specifications*—The part of the Contract that consists of written requirements for materials, equipment, systems, standards, and workmanship as applied to the Work, and certain administrative requirements and procedural matters applicable to the Work.

40. *Subcontractor*—An individual or entity having a direct contract with Contractor or with any other Subcontractor for the performance of a part of the Work.

41. *Submittal*—A written or graphic document, prepared by or for Contractor, which the Contract Documents require Contractor to submit to Engineer, or that is indicated as a Submittal in the Schedule of Submittals accepted by Engineer. Submittals may include Shop Drawings and Samples; schedules; product data; Owner-delegated designs; sustainable design information; information on special procedures; testing plans; results of tests and evaluations, source quality-control testing and inspections, and field or Site quality-control testing and inspections; warranties and certifications; Suppliers' instructions and reports; records of delivery of spare parts and tools; operations and maintenance data; Project photographic documentation; record documents; and other such documents required by the Contract Documents. Submittals, whether or not approved or accepted by Engineer, are not Contract Documents. Change Proposals, Change Orders, Claims, notices, Applications for Payment, and requests for interpretation or clarification are not Submittals.

42. *Substantial Completion*—The time at which the Work (or a specified part thereof) has progressed to the point where, in the opinion of Engineer, the Work (or a specified part thereof) is sufficiently complete, in accordance with the Contract Documents, so that the Work (or a specified part thereof) can be utilized for the purposes for which it is intended. The terms "substantially complete" and "substantially completed" as applied to all or part of the Work refer to Substantial Completion of such Work.

EJCDC® C-700, Standard General Conditions of the Construction Contract.
Copyright© 2018 National Society of Professional Engineers, American Council of Engineering Companies, and American Society of Civil Engineers. All rights reserved.

43. *Successful Bidder*—The Bidder to which the Owner makes an award of contract.

44. *Supplementary Conditions*—The part of the Contract that amends or supplements these General Conditions.

45. *Supplier*—A manufacturer, fabricator, supplier, distributor, or vendor having a direct contract with Contractor or with any Subcontractor to furnish materials or equipment to be incorporated in the Work by Contractor or a Subcontractor.

46. *Technical Data*

    a. Those items expressly identified as Technical Data in the Supplementary Conditions, with respect to either (1) existing subsurface conditions at or adjacent to the Site, or existing physical conditions at or adjacent to the Site including existing surface or subsurface structures (except Underground Facilities) or (2) Hazardous Environmental Conditions at the Site.

    b. If no such express identifications of Technical Data have been made with respect to conditions at the Site, then Technical Data is defined, with respect to conditions at the Site under Paragraphs 5.03, 5.04, and 5.06, as the data contained in boring logs, recorded measurements of subsurface water levels, assessments of the condition of subsurface facilities, laboratory test results, and other factual, objective information regarding conditions at the Site that are set forth in any geotechnical, environmental, or other Site or facilities conditions report prepared for the Project and made available to Contractor.

    c. Information and data regarding the presence or location of Underground Facilities are not intended to be categorized, identified, or defined as Technical Data, and instead Underground Facilities are shown or indicated on the Drawings.

47. *Underground Facilities*—All active or not-in-service underground lines, pipelines, conduits, ducts, encasements, cables, wires, manholes, vaults, tanks, tunnels, or other such facilities or systems at the Site, including but not limited to those facilities or systems that produce, transmit, distribute, or convey telephone or other communications, cable television, fiber optic transmissions, power, electricity, light, heat, gases, oil, crude oil products, liquid petroleum products, water, steam, waste, wastewater, storm water, other liquids or chemicals, or traffic or other control systems. An abandoned facility or system is not an Underground Facility.

48. *Unit Price Work*—Work to be paid for on the basis of unit prices.

49. *Work*—The entire construction or the various separately identifiable parts thereof required to be provided under the Contract Documents. Work includes and is the result of performing or providing all labor, services, and documentation necessary to produce such construction; furnishing, installing, and incorporating all materials and equipment into such construction; and may include related services such as testing, start-up, and commissioning, all as required by the Contract Documents.

50. *Work Change Directive*—A written directive to Contractor issued on or after the Effective Date of the Contract, signed by Owner and recommended by Engineer, ordering an addition, deletion, or revision in the Work.

EJCDC® C-700, Standard General Conditions of the Construction Contract.
Copyright© 2018 National Society of Professional Engineers, American Council of Engineering Companies, and American Society of Civil Engineers. All rights reserved.

1.02 *Terminology*

A. The words and terms discussed in Paragraphs 1.02.B, C, D, and E are not defined terms that require initial capital letters, but, when used in the Bidding Requirements or Contract Documents, have the indicated meaning.

B. *Intent of Certain Terms or Adjectives*: The Contract Documents include the terms "as allowed," "as approved," "as ordered," "as directed" or terms of like effect or import to authorize an exercise of professional judgment by Engineer. In addition, the adjectives "reasonable," "suitable," "acceptable," "proper," "satisfactory," or adjectives of like effect or import are used to describe an action or determination of Engineer as to the Work. It is intended that such exercise of professional judgment, action, or determination will be solely to evaluate, in general, the Work for compliance with the information in the Contract Documents and with the design concept of the Project as a functioning whole as shown or indicated in the Contract Documents (unless there is a specific statement indicating otherwise). The use of any such term or adjective is not intended to and shall not be effective to assign to Engineer any duty or authority to supervise or direct the performance of the Work, or any duty or authority to undertake responsibility contrary to the provisions of Article 10 or any other provision of the Contract Documents.

C. *Day*: The word "day" means a calendar day of 24 hours measured from midnight to the next midnight.

D. *Defective*: The word "defective," when modifying the word "Work," refers to Work that is unsatisfactory, faulty, or deficient in that it:

1. does not conform to the Contract Documents;

2. does not meet the requirements of any applicable inspection, reference standard, test, or approval referred to in the Contract Documents; or

3. has been damaged prior to Engineer's recommendation of final payment (unless responsibility for the protection thereof has been assumed by Owner at Substantial Completion in accordance with Paragraph 15.03 or Paragraph 15.04).

E. *Furnish, Install, Perform, Provide*

1. The word "furnish," when used in connection with services, materials, or equipment, means to supply and deliver said services, materials, or equipment to the Site (or some other specified location) ready for use or installation and in usable or operable condition.

2. The word "install," when used in connection with services, materials, or equipment, means to put into use or place in final position said services, materials, or equipment complete and ready for intended use.

3. The words "perform" or "provide," when used in connection with services, materials, or equipment, means to furnish and install said services, materials, or equipment complete and ready for intended use.

4. If the Contract Documents establish an obligation of Contractor with respect to specific services, materials, or equipment, but do not expressly use any of the four words "furnish," "install," "perform," or "provide," then Contractor shall furnish and install said services, materials, or equipment complete and ready for intended use.

EJCDC® C-700, Standard General Conditions of the Construction Contract.
Copyright© 2018 National Society of Professional Engineers, American Council of Engineering Companies, and American Society of Civil Engineers. All rights reserved.

F. *Contract Price or Contract Times*: References to a change in "Contract Price or Contract Times" or "Contract Times or Contract Price" or similar, indicate that such change applies to (1) Contract Price, (2) Contract Times, or (3) both Contract Price and Contract Times, as warranted, even if the term "or both" is not expressed.

G. Unless stated otherwise in the Contract Documents, words or phrases that have a well-known technical or construction industry or trade meaning are used in the Contract Documents in accordance with such recognized meaning.

ARTICLE 2—PRELIMINARY MATTERS

2.01 *Delivery of Performance and Payment Bonds; Evidence of Insurance*

A. *Performance and Payment Bonds*: When Contractor delivers the signed counterparts of the Agreement to Owner, Contractor shall also deliver to Owner the performance bond and payment bond (if the Contract requires Contractor to furnish such bonds).

B. *Evidence of Contractor's Insurance*: When Contractor delivers the signed counterparts of the Agreement to Owner, Contractor shall also deliver to Owner, with copies to each additional insured (as identified in the Contract), the certificates, endorsements, and other evidence of insurance required to be provided by Contractor in accordance with Article 6, except to the extent the Supplementary Conditions expressly establish other dates for delivery of specific insurance policies.

C. *Evidence of Owner's Insurance*: After receipt of the signed counterparts of the Agreement and all required bonds and insurance documentation, Owner shall promptly deliver to Contractor, with copies to each additional insured (as identified in the Contract), the certificates and other evidence of insurance required to be provided by Owner under Article 6.

2.02 *Copies of Documents*

A. Owner shall furnish to Contractor four printed copies of the Contract (including one fully signed counterpart of the Agreement), and one copy in electronic portable document format (PDF). Additional printed copies will be furnished upon request at the cost of reproduction.

B. Owner shall maintain and safeguard at least one original printed record version of the Contract, including Drawings and Specifications signed and sealed by Engineer and other design professionals. Owner shall make such original printed record version of the Contract available to Contractor for review. Owner may delegate the responsibilities under this provision to Engineer.

2.03 *Before Starting Construction*

A. *Preliminary Schedules*: Within 10 days after the Effective Date of the Contract (or as otherwise required by the Contract Documents), Contractor shall submit to Engineer for timely review:

1. a preliminary Progress Schedule indicating the times (numbers of days or dates) for starting and completing the various stages of the Work, including any Milestones specified in the Contract;

2. a preliminary Schedule of Submittals; and

3. a preliminary Schedule of Values for all of the Work which includes quantities and prices of items which when added together equal the Contract Price and subdivides the Work

EJCDC® C-700, Standard General Conditions of the Construction Contract.
Copyright© 2018 National Society of Professional Engineers, American Council of Engineering Companies, and American Society of Civil Engineers. All rights reserved.

into component parts in sufficient detail to serve as the basis for progress payments during performance of the Work. Such prices will include an appropriate amount of overhead and profit applicable to each item of Work.

2.04 *Preconstruction Conference; Designation of Authorized Representatives*

A. Before any Work at the Site is started, a conference attended by Owner, Contractor, Engineer, and others as appropriate will be held to establish a working understanding among the parties as to the Work, and to discuss the schedules referred to in Paragraph 2.03.A, procedures for handling Shop Drawings, Samples, and other Submittals, processing Applications for Payment, electronic or digital transmittals, and maintaining required records.

B. At this conference Owner and Contractor each shall designate, in writing, a specific individual to act as its authorized representative with respect to the services and responsibilities under the Contract. Such individuals shall have the authority to transmit and receive information, render decisions relative to the Contract, and otherwise act on behalf of each respective party.

2.05 *Acceptance of Schedules*

A. At least 10 days before submission of the first Application for Payment a conference, attended by Contractor, Engineer, and others as appropriate, will be held to review the schedules submitted in accordance with Paragraph 2.03.A. No progress payment will be made to Contractor until acceptable schedules are submitted to Engineer.

1. The Progress Schedule will be acceptable to Engineer if it provides an orderly progression of the Work to completion within the Contract Times. Such acceptance will not impose on Engineer responsibility for the Progress Schedule, for sequencing, scheduling, or progress of the Work, nor interfere with or relieve Contractor from Contractor's full responsibility therefor.

2. Contractor's Schedule of Submittals will be acceptable to Engineer if it provides a workable arrangement for reviewing and processing the required submittals.

3. Contractor's Schedule of Values will be acceptable to Engineer as to form and substance if it provides a reasonable allocation of the Contract Price to the component parts of the Work.

4. If a schedule is not acceptable, Contractor will have an additional 10 days to revise and resubmit the schedule.

2.06 *Electronic Transmittals*

A. Except as otherwise stated elsewhere in the Contract, the Owner, Engineer, and Contractor may send, and shall accept, Electronic Documents transmitted by Electronic Means.

B. If the Contract does not establish protocols for Electronic Means, then Owner, Engineer, and Contractor shall jointly develop such protocols.

C. Subject to any governing protocols for Electronic Means, when transmitting Electronic Documents by Electronic Means, the transmitting party makes no representations as to long-term compatibility, usability, or readability of the Electronic Documents resulting from the recipient's use of software application packages, operating systems, or computer hardware differing from those used in the drafting or transmittal of the Electronic Documents.

EJCDC® C-700, Standard General Conditions of the Construction Contract.
Copyright© 2018 National Society of Professional Engineers, American Council of Engineering Companies, and American Society of Civil Engineers. All rights reserved.

ARTICLE 3—CONTRACT DOCUMENTS: INTENT, REQUIREMENTS, REUSE

3.01 *Intent*

A. The Contract Documents are complementary; what is required by one Contract Document is as binding as if required by all.

B. It is the intent of the Contract Documents to describe a functionally complete Project (or part thereof) to be constructed in accordance with the Contract Documents.

C. Unless otherwise stated in the Contract Documents, if there is a discrepancy between the electronic versions of the Contract Documents (including any printed copies derived from such electronic versions) and the printed record version, the printed record version will govern.

D. The Contract supersedes prior negotiations, representations, and agreements, whether written or oral.

E. Engineer will issue clarifications and interpretations of the Contract Documents as provided herein.

F. Any provision or part of the Contract Documents held to be void or unenforceable under any Law or Regulation will be deemed stricken, and all remaining provisions will continue to be valid and binding upon Owner and Contractor, which agree that the Contract Documents will be reformed to replace such stricken provision or part thereof with a valid and enforceable provision that comes as close as possible to expressing the intention of the stricken provision.

G. Nothing in the Contract Documents creates:

1. any contractual relationship between Owner or Engineer and any Subcontractor, Supplier, or other individual or entity performing or furnishing any of the Work, for the benefit of such Subcontractor, Supplier, or other individual or entity; or

2. any obligation on the part of Owner or Engineer to pay or to see to the payment of any money due any such Subcontractor, Supplier, or other individual or entity, except as may otherwise be required by Laws and Regulations.

3.02 *Reference Standards*

A. *Standards Specifications, Codes, Laws and Regulations*

1. Reference in the Contract Documents to standard specifications, manuals, reference standards, or codes of any technical society, organization, or association, or to Laws or Regulations, whether such reference be specific or by implication, means the standard specification, manual, reference standard, code, or Laws or Regulations in effect at the time of opening of Bids (or on the Effective Date of the Contract if there were no Bids), except as may be otherwise specifically stated in the Contract Documents.

2. No provision of any such standard specification, manual, reference standard, or code, and no instruction of a Supplier, will be effective to change the duties or responsibilities of Owner, Contractor, or Engineer from those set forth in the part of the Contract Documents prepared by or for Engineer. No such provision or instruction shall be effective to assign to Owner or Engineer any duty or authority to supervise or direct the performance of the Work, or any duty or authority to undertake responsibility

EJCDC® C-700, Standard General Conditions of the Construction Contract.
Copyright© 2018 National Society of Professional Engineers, American Council of Engineering Companies, and American Society of Civil Engineers. All rights reserved.

inconsistent with the provisions of the part of the Contract Documents prepared by or for Engineer.

3.03 *Reporting and Resolving Discrepancies*

A. *Reporting Discrepancies*

1. *Contractor's Verification of Figures and Field Measurements*: Before undertaking each part of the Work, Contractor shall carefully study the Contract Documents, and check and verify pertinent figures and dimensions therein, particularly with respect to applicable field measurements. Contractor shall promptly report in writing to Engineer any conflict, error, ambiguity, or discrepancy that Contractor discovers, or has actual knowledge of, and shall not proceed with any Work affected thereby until the conflict, error, ambiguity, or discrepancy is resolved by a clarification or interpretation by Engineer, or by an amendment or supplement to the Contract issued pursuant to Paragraph 11.01.

2. *Contractor's Review of Contract Documents*: If, before or during the performance of the Work, Contractor discovers any conflict, error, ambiguity, or discrepancy within the Contract Documents, or between the Contract Documents and (a) any applicable Law or Regulation, (b) actual field conditions, (c) any standard specification, manual, reference standard, or code, or (d) any instruction of any Supplier, then Contractor shall promptly report it to Engineer in writing. Contractor shall not proceed with the Work affected thereby (except in an emergency as required by Paragraph 7.15) until the conflict, error, ambiguity, or discrepancy is resolved, by a clarification or interpretation by Engineer, or by an amendment or supplement to the Contract issued pursuant to Paragraph 11.01.

3. Contractor shall not be liable to Owner or Engineer for failure to report any conflict, error, ambiguity, or discrepancy in the Contract Documents unless Contractor had actual knowledge thereof.

B. *Resolving Discrepancies*

1. Except as may be otherwise specifically stated in the Contract Documents, the provisions of the part of the Contract Documents prepared by or for Engineer take precedence in resolving any conflict, error, ambiguity, or discrepancy between such provisions of the Contract Documents and:

a. the provisions of any standard specification, manual, reference standard, or code, or the instruction of any Supplier (whether or not specifically incorporated by reference as a Contract Document); or

b. the provisions of any Laws or Regulations applicable to the performance of the Work (unless such an interpretation of the provisions of the Contract Documents would result in violation of such Law or Regulation).

3.04 *Requirements of the Contract Documents*

A. During the performance of the Work and until final payment, Contractor and Owner shall submit to the Engineer in writing all matters in question concerning the requirements of the Contract Documents (sometimes referred to as requests for information or interpretation—RFIs), or relating to the acceptability of the Work under the Contract Documents, as soon as possible after such matters arise. Engineer will be the initial interpreter of the requirements of the Contract Documents, and judge of the acceptability of the Work.

EJCDC® C-700, Standard General Conditions of the Construction Contract.
Copyright© 2018 National Society of Professional Engineers, American Council of Engineering Companies, and American Society of Civil Engineers. All rights reserved.

B. Engineer will, with reasonable promptness, render a written clarification, interpretation, or decision on the issue submitted, or initiate an amendment or supplement to the Contract Documents. Engineer's written clarification, interpretation, or decision will be final and binding on Contractor, unless it appeals by submitting a Change Proposal, and on Owner, unless it appeals by filing a Claim.

C. If a submitted matter in question concerns terms and conditions of the Contract Documents that do not involve (1) the performance or acceptability of the Work under the Contract Documents, (2) the design (as set forth in the Drawings, Specifications, or otherwise), or (3) other engineering or technical matters, then Engineer will promptly notify Owner and Contractor in writing that Engineer is unable to provide a decision or interpretation. If Owner and Contractor are unable to agree on resolution of such a matter in question, either party may pursue resolution as provided in Article 12.

3.05 *Reuse of Documents*

A. Contractor and its Subcontractors and Suppliers shall not:

1. have or acquire any title to or ownership rights in any of the Drawings, Specifications, or other documents (or copies of any thereof) prepared by or bearing the seal of Engineer or its consultants, including electronic media versions, or reuse any such Drawings, Specifications, other documents, or copies thereof on extensions of the Project or any other project without written consent of Owner and Engineer and specific written verification or adaptation by Engineer; or

2. have or acquire any title or ownership rights in any other Contract Documents, reuse any such Contract Documents for any purpose without Owner's express written consent, or violate any copyrights pertaining to such Contract Documents.

B. The prohibitions of this Paragraph 3.05 will survive final payment, or termination of the Contract. Nothing herein precludes Contractor from retaining copies of the Contract Documents for record purposes.

ARTICLE 4—COMMENCEMENT AND PROGRESS OF THE WORK

4.01 *Commencement of Contract Times; Notice to Proceed*

A. The Contract Times will commence to run on the 30th day after the Effective Date of the Contract or, if a Notice to Proceed is given, on the day indicated in the Notice to Proceed. A Notice to Proceed may be given at any time within 30 days after the Effective Date of the Contract. In no event will the Contract Times commence to run later than the 60th day after the day of Bid opening or the 30th day after the Effective Date of the Contract, whichever date is earlier.

4.02 *Starting the Work*

A. Contractor shall start to perform the Work on the date when the Contract Times commence to run. No Work may be done at the Site prior to such date.

4.03 *Reference Points*

A. Owner shall provide engineering surveys to establish reference points for construction which in Engineer's judgment are necessary to enable Contractor to proceed with the Work. Contractor shall be responsible for laying out the Work, shall protect and preserve the

EJCDC® C-700, Standard General Conditions of the Construction Contract.
Copyright© 2018 National Society of Professional Engineers, American Council of Engineering Companies, and American Society of Civil Engineers. All rights reserved.

established reference points and property monuments, and shall make no changes or relocations without the prior written approval of Owner. Contractor shall report to Engineer whenever any reference point or property monument is lost or destroyed or requires relocation because of necessary changes in grades or locations, and shall be responsible for the accurate replacement or relocation of such reference points or property monuments by professionally qualified personnel.

4.04 *Progress Schedule*

A. Contractor shall adhere to the Progress Schedule established in accordance with Paragraph 2.05 as it may be adjusted from time to time as provided below.

1. Contractor shall submit to Engineer for acceptance (to the extent indicated in Paragraph 2.05) proposed adjustments in the Progress Schedule that will not result in changing the Contract Times.

2. Proposed adjustments in the Progress Schedule that will change the Contract Times must be submitted in accordance with the requirements of Article 11.

B. Contractor shall carry on the Work and adhere to the Progress Schedule during all disputes or disagreements with Owner. No Work will be delayed or postponed pending resolution of any disputes or disagreements, or during any appeal process, except as permitted by Paragraph 16.04, or as Owner and Contractor may otherwise agree in writing.

4.05 *Delays in Contractor's Progress*

A. If Owner, Engineer, or anyone for whom Owner is responsible, delays, disrupts, or interferes with the performance or progress of the Work, then Contractor shall be entitled to an equitable adjustment in Contract Price or Contract Times.

B. Contractor shall not be entitled to an adjustment in Contract Price or Contract Times for delay, disruption, or interference caused by or within the control of Contractor. Delay, disruption, and interference attributable to and within the control of a Subcontractor or Supplier shall be deemed to be within the control of Contractor.

C. If Contractor's performance or progress is delayed, disrupted, or interfered with by unanticipated causes not the fault of and beyond the control of Owner, Contractor, and those for which they are responsible, then Contractor shall be entitled to an equitable adjustment in Contract Times. Such an adjustment will be Contractor's sole and exclusive remedy for the delays, disruption, and interference described in this paragraph. Causes of delay, disruption, or interference that may give rise to an adjustment in Contract Times under this paragraph include but are not limited to the following:

1. Severe and unavoidable natural catastrophes such as fires, floods, epidemics, and earthquakes;

2. Abnormal weather conditions;

3. Acts or failures to act of third-party utility owners or other third-party entities (other than those third-party utility owners or other third-party entities performing other work at or adjacent to the Site as arranged by or under contract with Owner, as contemplated in Article 8); and

4. Acts of war or terrorism.

EJCDC® C-700, Standard General Conditions of the Construction Contract.
Copyright© 2018 National Society of Professional Engineers, American Council of Engineering Companies, and American Society of Civil Engineers. All rights reserved.

D. Contractor's entitlement to an adjustment of Contract Times or Contract Price is limited as follows:

1. Contractor's entitlement to an adjustment of the Contract Times is conditioned on the delay, disruption, or interference adversely affecting an activity on the critical path to completion of the Work, as of the time of the delay, disruption, or interference.

2. Contractor shall not be entitled to an adjustment in Contract Price for any delay, disruption, or interference if such delay is concurrent with a delay, disruption, or interference caused by or within the control of Contractor. Such a concurrent delay by Contractor shall not preclude an adjustment of Contract Times to which Contractor is otherwise entitled.

3. Adjustments of Contract Times or Contract Price are subject to the provisions of Article 11.

E. Each Contractor request or Change Proposal seeking an increase in Contract Times or Contract Price must be supplemented by supporting data that sets forth in detail the following:

1. The circumstances that form the basis for the requested adjustment;

2. The date upon which each cause of delay, disruption, or interference began to affect the progress of the Work;

3. The date upon which each cause of delay, disruption, or interference ceased to affect the progress of the Work;

4. The number of days' increase in Contract Times claimed as a consequence of each such cause of delay, disruption, or interference; and

5. The impact on Contract Price, in accordance with the provisions of Paragraph 11.07.

Contractor shall also furnish such additional supporting documentation as Owner or Engineer may require including, where appropriate, a revised progress schedule indicating all the activities affected by the delay, disruption, or interference, and an explanation of the effect of the delay, disruption, or interference on the critical path to completion of the Work.

F. Delays, disruption, and interference to the performance or progress of the Work resulting from the existence of a differing subsurface or physical condition, an Underground Facility that was not shown or indicated by the Contract Documents, or not shown or indicated with reasonable accuracy, and those resulting from Hazardous Environmental Conditions, are governed by Article 5, together with the provisions of Paragraphs 4.05.D and 4.05.E.

G. Paragraph 8.03 addresses delays, disruption, and interference to the performance or progress of the Work resulting from the performance of certain other work at or adjacent to the Site.

ARTICLE 5—SITE; SUBSURFACE AND PHYSICAL CONDITIONS; HAZARDOUS ENVIRONMENTAL CONDITIONS

5.01 *Availability of Lands*

A. Owner shall furnish the Site. Owner shall notify Contractor in writing of any encumbrances or restrictions not of general application but specifically related to use of the Site with which Contractor must comply in performing the Work.

Copyright© 2018 National Society of Professional Engineers, American Council of Engineering Companies, and American Society of Civil Engineers. All rights reserved.

B. Upon reasonable written request, Owner shall furnish Contractor with a current statement of record legal title and legal description of the lands upon which permanent improvements are to be made and Owner's interest therein as necessary for giving notice of or filing a mechanic's or construction lien against such lands in accordance with applicable Laws and Regulations.

C. Contractor shall provide for all additional lands and access thereto that may be required for temporary construction facilities or storage of materials and equipment.

5.02 *Use of Site and Other Areas*

A. *Limitation on Use of Site and Other Areas*

1. Contractor shall confine construction equipment, temporary construction facilities, the storage of materials and equipment, and the operations of workers to the Site, adjacent areas that Contractor has arranged to use through construction easements or otherwise, and other adjacent areas permitted by Laws and Regulations, and shall not unreasonably encumber the Site and such other adjacent areas with construction equipment or other materials or equipment. Contractor shall assume full responsibility for (a) damage to the Site; (b) damage to any such other adjacent areas used for Contractor's operations; (c) damage to any other adjacent land or areas, or to improvements, structures, utilities, or similar facilities located at such adjacent lands or areas; and (d) for injuries and losses sustained by the owners or occupants of any such land or areas; provided that such damage or injuries result from the performance of the Work or from other actions or conduct of the Contractor or those for which Contractor is responsible.

2. If a damage or injury claim is made by the owner or occupant of any such land or area because of the performance of the Work, or because of other actions or conduct of the Contractor or those for which Contractor is responsible, Contractor shall (a) take immediate corrective or remedial action as required by Paragraph 7.13, or otherwise; (b) promptly attempt to settle the claim as to all parties through negotiations with such owner or occupant, or otherwise resolve the claim by arbitration or other dispute resolution proceeding, or in a court of competent jurisdiction; and (c) to the fullest extent permitted by Laws and Regulations, indemnify and hold harmless Owner and Engineer, and the officers, directors, members, partners, employees, agents, consultants and subcontractors of each and any of them, from and against any such claim, and against all costs, losses, and damages (including but not limited to all fees and charges of engineers, architects, attorneys, and other professionals and all court or arbitration or other dispute resolution costs) arising out of or relating to any claim or action, legal or equitable, brought by any such owner or occupant against Owner, Engineer, or any other party indemnified hereunder to the extent caused directly or indirectly, in whole or in part by, or based upon, Contractor's performance of the Work, or because of other actions or conduct of the Contractor or those for which Contractor is responsible.

B. *Removal of Debris During Performance of the Work*: During the progress of the Work the Contractor shall keep the Site and other adjacent areas free from accumulations of waste materials, rubbish, and other debris. Removal and disposal of such waste materials, rubbish, and other debris will conform to applicable Laws and Regulations.

C. *Cleaning*: Prior to Substantial Completion of the Work Contractor shall clean the Site and the Work and make it ready for utilization by Owner. At the completion of the Work Contractor shall remove from the Site and adjacent areas all tools, appliances, construction equipment

EJCDC® C-700, Standard General Conditions of the Construction Contract.
Copyright© 2018 National Society of Professional Engineers, American Council of Engineering Companies, and American Society of Civil Engineers. All rights reserved.

and machinery, and surplus materials and shall restore to original condition all property not designated for alteration by the Contract Documents.

D. *Loading of Structures*: Contractor shall not load nor permit any part of any structure to be loaded in any manner that will endanger the structure, nor shall Contractor subject any part of the Work or adjacent structures or land to stresses or pressures that will endanger them.

5.03 *Subsurface and Physical Conditions*

A. *Reports and Drawings*: The Supplementary Conditions identify:

1. Those reports of explorations and tests of subsurface conditions at or adjacent to the Site that contain Technical Data;

2. Those drawings of existing physical conditions at or adjacent to the Site, including those drawings depicting existing surface or subsurface structures at or adjacent to the Site (except Underground Facilities), that contain Technical Data; and

3. Technical Data contained in such reports and drawings.

B. *Underground Facilities*: Underground Facilities are shown or indicated on the Drawings, pursuant to Paragraph 5.05, and not in the drawings referred to in Paragraph 5.03.A. Information and data regarding the presence or location of Underground Facilities are not intended to be categorized, identified, or defined as Technical Data.

C. *Reliance by Contractor on Technical Data*: Contractor may rely upon the accuracy of the Technical Data expressly identified in the Supplementary Conditions with respect to such reports and drawings, but such reports and drawings are not Contract Documents. If no such express identification has been made, then Contractor may rely upon the accuracy of the Technical Data as defined in Paragraph 1.01.A.46.b.

D. *Limitations of Other Data and Documents*: Except for such reliance on Technical Data, Contractor may not rely upon or make any claim against Owner or Engineer, or any of their officers, directors, members, partners, employees, agents, consultants, or subcontractors, with respect to:

1. the completeness of such reports and drawings for Contractor's purposes, including, but not limited to, any aspects of the means, methods, techniques, sequences, and procedures of construction to be employed by Contractor, and safety precautions and programs incident thereto;

2. other data, interpretations, opinions, and information contained in such reports or shown or indicated in such drawings;

3. the contents of other Site-related documents made available to Contractor, such as record drawings from other projects at or adjacent to the Site, or Owner's archival documents concerning the Site; or

4. any Contractor interpretation of or conclusion drawn from any Technical Data or any such other data, interpretations, opinions, or information.

EJCDC® C-700, Standard General Conditions of the Construction Contract.
Copyright© 2018 National Society of Professional Engineers, American Council of Engineering Companies, and American Society of Civil Engineers. All rights reserved.

5.04 *Differing Subsurface or Physical Conditions*

A. *Notice by Contractor*: If Contractor believes that any subsurface or physical condition that is uncovered or revealed at the Site:

1. is of such a nature as to establish that any Technical Data on which Contractor is entitled to rely as provided in Paragraph 5.03 is materially inaccurate;

2. is of such a nature as to require a change in the Drawings or Specifications;

3. differs materially from that shown or indicated in the Contract Documents; or

4. is of an unusual nature, and differs materially from conditions ordinarily encountered and generally recognized as inherent in work of the character provided for in the Contract Documents;

then Contractor shall, promptly after becoming aware thereof and before further disturbing the subsurface or physical conditions or performing any Work in connection therewith (except in an emergency as required by Paragraph 7.15), notify Owner and Engineer in writing about such condition. Contractor shall not further disturb such condition or perform any Work in connection therewith (except with respect to an emergency) until receipt of a written statement permitting Contractor to do so.

B. *Engineer's Review*: After receipt of written notice as required by the preceding paragraph, Engineer will promptly review the subsurface or physical condition in question; determine whether it is necessary for Owner to obtain additional exploration or tests with respect to the condition; conclude whether the condition falls within any one or more of the differing site condition categories in Paragraph 5.04.A; obtain any pertinent cost or schedule information from Contractor; prepare recommendations to Owner regarding the Contractor's resumption of Work in connection with the subsurface or physical condition in question and the need for any change in the Drawings or Specifications; and advise Owner in writing of Engineer's findings, conclusions, and recommendations.

C. *Owner's Statement to Contractor Regarding Site Condition*: After receipt of Engineer's written findings, conclusions, and recommendations, Owner shall issue a written statement to Contractor (with a copy to Engineer) regarding the subsurface or physical condition in question, addressing the resumption of Work in connection with such condition, indicating whether any change in the Drawings or Specifications will be made, and adopting or rejecting Engineer's written findings, conclusions, and recommendations, in whole or in part.

D. *Early Resumption of Work*: If at any time Engineer determines that Work in connection with the subsurface or physical condition in question may resume prior to completion of Engineer's review or Owner's issuance of its statement to Contractor, because the condition in question has been adequately documented, and analyzed on a preliminary basis, then the Engineer may at its discretion instruct Contractor to resume such Work.

E. *Possible Price and Times Adjustments*

1. Contractor shall be entitled to an equitable adjustment in Contract Price or Contract Times, to the extent that the existence of a differing subsurface or physical condition, or any related delay, disruption, or interference, causes an increase or decrease in

EJCDC® C-700, Standard General Conditions of the Construction Contract.
Copyright© 2018 National Society of Professional Engineers, American Council of Engineering Companies, and American Society of Civil Engineers. All rights reserved.

Contractor's cost of, or time required for, performance of the Work; subject, however, to the following:

a. Such condition must fall within any one or more of the categories described in Paragraph 5.04.A;

b. With respect to Work that is paid for on a unit price basis, any adjustment in Contract Price will be subject to the provisions of Paragraph 13.03; and,

c. Contractor's entitlement to an adjustment of the Contract Times is subject to the provisions of Paragraphs 4.05.D and 4.05.E.

2. Contractor shall not be entitled to any adjustment in the Contract Price or Contract Times with respect to a subsurface or physical condition if:

a. Contractor knew of the existence of such condition at the time Contractor made a commitment to Owner with respect to Contract Price and Contract Times by the submission of a Bid or becoming bound under a negotiated contract, or otherwise;

b. The existence of such condition reasonably could have been discovered or revealed as a result of any examination, investigation, exploration, test, or study of the Site and contiguous areas expressly required by the Bidding Requirements or Contract Documents to be conducted by or for Contractor prior to Contractor's making such commitment; or

c. Contractor failed to give the written notice required by Paragraph 5.04.A.

3. If Owner and Contractor agree regarding Contractor's entitlement to and the amount or extent of any adjustment in the Contract Price or Contract Times, then any such adjustment will be set forth in a Change Order.

4. Contractor may submit a Change Proposal regarding its entitlement to or the amount or extent of any adjustment in the Contract Price or Contract Times, no later than 30 days after Owner's issuance of the Owner's written statement to Contractor regarding the subsurface or physical condition in question.

F. *Underground Facilities; Hazardous Environmental Conditions*: Paragraph 5.05 governs rights and responsibilities regarding the presence or location of Underground Facilities. Paragraph 5.06 governs rights and responsibilities regarding Hazardous Environmental Conditions. The provisions of Paragraphs 5.03 and 5.04 are not applicable to the presence or location of Underground Facilities, or to Hazardous Environmental Conditions.

5.05 *Underground Facilities*

A. *Contractor's Responsibilities*: Unless it is otherwise expressly provided in the Supplementary Conditions, the cost of all of the following are included in the Contract Price, and Contractor shall have full responsibility for:

1. reviewing and checking all information and data regarding existing Underground Facilities at the Site;

2. complying with applicable state and local utility damage prevention Laws and Regulations;

Copyright© 2018 National Society of Professional Engineers, American Council of Engineering Companies, and American Society of Civil Engineers. All rights reserved.

3. verifying the actual location of those Underground Facilities shown or indicated in the Contract Documents as being within the area affected by the Work, by exposing such Underground Facilities during the course of construction;

4. coordination of the Work with the owners (including Owner) of such Underground Facilities, during construction; and

5. the safety and protection of all existing Underground Facilities at the Site, and repairing any damage thereto resulting from the Work.

B. *Notice by Contractor*: If Contractor believes that an Underground Facility that is uncovered or revealed at the Site was not shown or indicated on the Drawings, or was not shown or indicated on the Drawings with reasonable accuracy, then Contractor shall, promptly after becoming aware thereof and before further disturbing conditions affected thereby or performing any Work in connection therewith (except in an emergency as required by Paragraph 7.15), notify Owner and Engineer in writing regarding such Underground Facility.

C. *Engineer's Review*: Engineer will:

1. promptly review the Underground Facility and conclude whether such Underground Facility was not shown or indicated on the Drawings, or was not shown or indicated with reasonable accuracy;

2. identify and communicate with the owner of the Underground Facility; prepare recommendations to Owner (and if necessary issue any preliminary instructions to Contractor) regarding the Contractor's resumption of Work in connection with the Underground Facility in question;

3. obtain any pertinent cost or schedule information from Contractor; determine the extent, if any, to which a change is required in the Drawings or Specifications to reflect and document the consequences of the existence or location of the Underground Facility; and

4. advise Owner in writing of Engineer's findings, conclusions, and recommendations.

During such time, Contractor shall be responsible for the safety and protection of such Underground Facility.

D. *Owner's Statement to Contractor Regarding Underground Facility*: After receipt of Engineer's written findings, conclusions, and recommendations, Owner shall issue a written statement to Contractor (with a copy to Engineer) regarding the Underground Facility in question addressing the resumption of Work in connection with such Underground Facility, indicating whether any change in the Drawings or Specifications will be made, and adopting or rejecting Engineer's written findings, conclusions, and recommendations in whole or in part.

E. *Early Resumption of Work*: If at any time Engineer determines that Work in connection with the Underground Facility may resume prior to completion of Engineer's review or Owner's issuance of its statement to Contractor, because the Underground Facility in question and conditions affected by its presence have been adequately documented, and analyzed on a preliminary basis, then the Engineer may at its discretion instruct Contractor to resume such Work.

F. *Possible Price and Times Adjustments*

1. Contractor shall be entitled to an equitable adjustment in the Contract Price or Contract Times, to the extent that any existing Underground Facility at the Site that was not shown

EJCDC® C-700, Standard General Conditions of the Construction Contract.
Copyright© 2018 National Society of Professional Engineers, American Council of Engineering Companies, and American Society of Civil Engineers. All rights reserved.

or indicated on the Drawings, or was not shown or indicated with reasonable accuracy, or any related delay, disruption, or interference, causes an increase or decrease in Contractor's cost of, or time required for, performance of the Work; subject, however, to the following:

a. With respect to Work that is paid for on a unit price basis, any adjustment in Contract Price will be subject to the provisions of Paragraph 13.03;

b. Contractor's entitlement to an adjustment of the Contract Times is subject to the provisions of Paragraphs 4.05.D and 4.05.E; and

c. Contractor gave the notice required in Paragraph 5.05.B.

2. If Owner and Contractor agree regarding Contractor's entitlement to and the amount or extent of any adjustment in the Contract Price or Contract Times, then any such adjustment will be set forth in a Change Order.

3. Contractor may submit a Change Proposal regarding its entitlement to or the amount or extent of any adjustment in the Contract Price or Contract Times, no later than 30 days after Owner's issuance of the Owner's written statement to Contractor regarding the Underground Facility in question.

4. The information and data shown or indicated on the Drawings with respect to existing Underground Facilities at the Site is based on information and data (a) furnished by the owners of such Underground Facilities, or by others, (b) obtained from available records, or (c) gathered in an investigation conducted in accordance with the current edition of ASCE 38, Standard Guideline for the Collection and Depiction of Existing Subsurface Utility Data, by the American Society of Civil Engineers. If such information or data is incorrect or incomplete, Contractor's remedies are limited to those set forth in this Paragraph 5.05.F.

5.06 *Hazardous Environmental Conditions at Site*

A. *Reports and Drawings*: The Supplementary Conditions identify:

1. those reports known to Owner relating to Hazardous Environmental Conditions that have been identified at or adjacent to the Site;

2. drawings known to Owner relating to Hazardous Environmental Conditions that have been identified at or adjacent to the Site; and

3. Technical Data contained in such reports and drawings.

B. *Reliance by Contractor on Technical Data Authorized*: Contractor may rely upon the accuracy of the Technical Data expressly identified in the Supplementary Conditions with respect to such reports and drawings, but such reports and drawings are not Contract Documents. If no such express identification has been made, then Contractor may rely on the accuracy of the Technical Data as defined in Paragraph 1.01.A.46.b. Except for such reliance on Technical Data, Contractor may not rely upon or make any claim against Owner or Engineer, or any of their officers, directors, members, partners, employees, agents, consultants, or subcontractors, with respect to:

1. the completeness of such reports and drawings for Contractor's purposes, including, but not limited to, any aspects of the means, methods, techniques, sequences and procedures

EJCDC® C-700, Standard General Conditions of the Construction Contract.
Copyright© 2018 National Society of Professional Engineers, American Council of Engineering Companies, and American Society of Civil Engineers. All rights reserved.

of construction to be employed by Contractor, and safety precautions and programs incident thereto;

2. other data, interpretations, opinions, and information contained in such reports or shown or indicated in such drawings; or

3. any Contractor interpretation of or conclusion drawn from any Technical Data or any such other data, interpretations, opinions or information.

C. Contractor shall not be responsible for removing or remediating any Hazardous Environmental Condition encountered, uncovered, or revealed at the Site unless such removal or remediation is expressly identified in the Contract Documents to be within the scope of the Work.

D. Contractor shall be responsible for controlling, containing, and duly removing all Constituents of Concern brought to the Site by Contractor, Subcontractors, Suppliers, or anyone else for whom Contractor is responsible, and for any associated costs; and for the costs of removing and remediating any Hazardous Environmental Condition created by the presence of any such Constituents of Concern.

E. If Contractor encounters, uncovers, or reveals a Hazardous Environmental Condition whose removal or remediation is not expressly identified in the Contract Documents as being within the scope of the Work, or if Contractor or anyone for whom Contractor is responsible creates a Hazardous Environmental Condition, then Contractor shall immediately: (1) secure or otherwise isolate such condition; (2) stop all Work in connection with such condition and in any area affected thereby (except in an emergency as required by Paragraph 7.15); and (3) notify Owner and Engineer (and promptly thereafter confirm such notice in writing). Owner shall promptly consult with Engineer concerning the necessity for Owner to retain a qualified expert to evaluate such condition or take corrective action, if any. Promptly after consulting with Engineer, Owner shall take such actions as are necessary to permit Owner to timely obtain required permits and provide Contractor the written notice required by Paragraph 5.06.F. If Contractor or anyone for whom Contractor is responsible created the Hazardous Environmental Condition in question, then Owner may remove and remediate the Hazardous Environmental Condition, and impose a set-off against payments to account for the associated costs.

F. Contractor shall not resume Work in connection with such Hazardous Environmental Condition or in any affected area until after Owner has obtained any required permits related thereto, and delivered written notice to Contractor either (1) specifying that such condition and any affected area is or has been rendered safe for the resumption of Work, or (2) specifying any special conditions under which such Work may be resumed safely.

G. If Owner and Contractor cannot agree as to entitlement to or on the amount or extent, if any, of any adjustment in Contract Price or Contract Times, as a result of such Work stoppage, such special conditions under which Work is agreed to be resumed by Contractor, or any costs or expenses incurred in response to the Hazardous Environmental Condition, then within 30 days of Owner's written notice regarding the resumption of Work, Contractor may submit a Change Proposal, or Owner may impose a set-off. Entitlement to any such adjustment is subject to the provisions of Paragraphs 4.05.D, 4.05.E, 11.07, and 11.08.

H. If, after receipt of such written notice, Contractor does not agree to resume such Work based on a reasonable belief it is unsafe, or does not agree to resume such Work under such special

EJCDC® C-700, Standard General Conditions of the Construction Contract.
Copyright© 2018 National Society of Professional Engineers, American Council of Engineering Companies, and American Society of Civil Engineers. All rights reserved.

conditions, then Owner may order the portion of the Work that is in the area affected by such condition to be deleted from the Work, following the contractual change procedures in Article 11. Owner may have such deleted portion of the Work performed by Owner's own forces or others in accordance with Article 8.

I. To the fullest extent permitted by Laws and Regulations, Owner shall indemnify and hold harmless Contractor, Subcontractors, and Engineer, and the officers, directors, members, partners, employees, agents, consultants, and subcontractors of each and any of them, from and against all claims, costs, losses, and damages (including but not limited to all fees and charges of engineers, architects, attorneys, and other professionals, and all court, arbitration, or other dispute resolution costs) arising out of or relating to a Hazardous Environmental Condition, provided that such Hazardous Environmental Condition (1) was not shown or indicated in the Drawings, Specifications, or other Contract Documents, identified as Technical Data entitled to limited reliance pursuant to Paragraph 5.06.B, or identified in the Contract Documents to be included within the scope of the Work, and (2) was not created by Contractor or by anyone for whom Contractor is responsible. Nothing in this Paragraph 5.06.I obligates Owner to indemnify any individual or entity from and against the consequences of that individual's or entity's own negligence.

J. To the fullest extent permitted by Laws and Regulations, Contractor shall indemnify and hold harmless Owner and Engineer, and the officers, directors, members, partners, employees, agents, consultants, and subcontractors of each and any of them, from and against all claims, costs, losses, and damages (including but not limited to all fees and charges of engineers, architects, attorneys, and other professionals and all court or arbitration or other dispute resolution costs) arising out of or relating to the failure to control, contain, or remove a Constituent of Concern brought to the Site by Contractor or by anyone for whom Contractor is responsible, or to a Hazardous Environmental Condition created by Contractor or by anyone for whom Contractor is responsible. Nothing in this Paragraph 5.06.J obligates Contractor to indemnify any individual or entity from and against the consequences of that individual's or entity's own negligence.

K. The provisions of Paragraphs 5.03, 5.04, and 5.05 do not apply to the presence of Constituents of Concern or to a Hazardous Environmental Condition uncovered or revealed at the Site.

ARTICLE 6—BONDS AND INSURANCE

6.01 *Performance, Payment, and Other Bonds*

A. Contractor shall furnish a performance bond and a payment bond, each in an amount at least equal to the Contract Price, as security for the faithful performance and payment of Contractor's obligations under the Contract. These bonds must remain in effect until one year after the date when final payment becomes due or until completion of the correction period specified in Paragraph 15.08, whichever is later, except as provided otherwise by Laws or Regulations, the terms of a prescribed bond form, the Supplementary Conditions, or other provisions of the Contract.

B. Contractor shall also furnish such other bonds (if any) as are required by the Supplementary Conditions or other provisions of the Contract.

C. All bonds must be in the form included in the Bidding Documents or otherwise specified by Owner prior to execution of the Contract, except as provided otherwise by Laws or

EJCDC® C-700, Standard General Conditions of the Construction Contract.
Copyright© 2018 National Society of Professional Engineers, American Council of Engineering Companies, and American Society of Civil Engineers. All rights reserved.

Regulations, and must be issued and signed by a surety named in "Companies Holding Certificates of Authority as Acceptable Sureties on Federal Bonds and as Acceptable Reinsuring Companies" as published in Department Circular 570 (as amended and supplemented) by the Bureau of the Fiscal Service, U.S. Department of the Treasury. A bond signed by an agent or attorney-in-fact must be accompanied by a certified copy of that individual's authority to bind the surety. The evidence of authority must show that it is effective on the date the agent or attorney-in-fact signed the accompanying bond.

D. Contractor shall obtain the required bonds from surety companies that are duly licensed or authorized, in the state or jurisdiction in which the Project is located, to issue bonds in the required amounts.

E. If the surety on a bond furnished by Contractor is declared bankrupt or becomes insolvent, or the surety ceases to meet the requirements above, then Contractor shall promptly notify Owner and Engineer in writing and shall, within 20 days after the event giving rise to such notification, provide another bond and surety, both of which must comply with the bond and surety requirements above.

F. If Contractor has failed to obtain a required bond, Owner may exclude the Contractor from the Site and exercise Owner's termination rights under Article 16.

G. Upon request to Owner from any Subcontractor, Supplier, or other person or entity claiming to have furnished labor, services, materials, or equipment used in the performance of the Work, Owner shall provide a copy of the payment bond to such person or entity.

H. Upon request to Contractor from any Subcontractor, Supplier, or other person or entity claiming to have furnished labor, services, materials, or equipment used in the performance of the Work, Contractor shall provide a copy of the payment bond to such person or entity.

6.02 *Insurance—General Provisions*

A. Owner and Contractor shall obtain and maintain insurance as required in this article and in the Supplementary Conditions.

B. All insurance required by the Contract to be purchased and maintained by Owner or Contractor shall be obtained from insurance companies that are duly licensed or authorized in the state or jurisdiction in which the Project is located to issue insurance policies for the required limits and coverages. Unless a different standard is indicated in the Supplementary Conditions, all companies that provide insurance policies required under this Contract shall have an A.M. Best rating of A-VII or better.

C. Alternative forms of insurance coverage, including but not limited to self-insurance and "Occupational Accident and Excess Employer's Indemnity Policies," are not sufficient to meet the insurance requirements of this Contract, unless expressly allowed in the Supplementary Conditions.

D. Contractor shall deliver to Owner, with copies to each additional insured identified in the Contract, certificates of insurance and endorsements establishing that Contractor has obtained and is maintaining the policies and coverages required by the Contract. Upon request by Owner or any other insured, Contractor shall also furnish other evidence of such required insurance, including but not limited to copies of policies, documentation of applicable self-insured retentions (if allowed) and deductibles, full disclosure of all relevant exclusions, and evidence of insurance required to be purchased and maintained by

EJCDC® C-700, Standard General Conditions of the Construction Contract.
Copyright© 2018 National Society of Professional Engineers, American Council of Engineering Companies, and American Society of Civil Engineers. All rights reserved.

Subcontractors or Suppliers. In any documentation furnished under this provision, Contractor, Subcontractors, and Suppliers may block out (redact) (1) any confidential premium or pricing information and (2) any wording specific to a project or jurisdiction other than those applicable to this Contract.

E. Owner shall deliver to Contractor, with copies to each additional insured identified in the Contract, certificates of insurance and endorsements establishing that Owner has obtained and is maintaining the policies and coverages required of Owner by the Contract (if any). Upon request by Contractor or any other insured, Owner shall also provide other evidence of such required insurance (if any), including but not limited to copies of policies, documentation of applicable self-insured retentions (if allowed) and deductibles, and full disclosure of all relevant exclusions. In any documentation furnished under this provision, Owner may block out (redact) (1) any confidential premium or pricing information and (2) any wording specific to a project or jurisdiction other than those relevant to this Contract.

F. Failure of Owner or Contractor to demand such certificates or other evidence of the other party's full compliance with these insurance requirements, or failure of Owner or Contractor to identify a deficiency in compliance from the evidence provided, will not be construed as a waiver of the other party's obligation to obtain and maintain such insurance.

G. In addition to the liability insurance required to be provided by Contractor, the Owner, at Owner's option, may purchase and maintain Owner's own liability insurance. Owner's liability policies, if any, operate separately and independently from policies required to be provided by Contractor, and Contractor cannot rely upon Owner's liability policies for any of Contractor's obligations to the Owner, Engineer, or third parties.

H. Contractor shall require:

1. Subcontractors to purchase and maintain worker's compensation, commercial general liability, and other insurance that is appropriate for their participation in the Project, and to name as additional insureds Owner and Engineer (and any other individuals or entities identified in the Supplementary Conditions as additional insureds on Contractor's liability policies) on each Subcontractor's commercial general liability insurance policy; and

2. Suppliers to purchase and maintain insurance that is appropriate for their participation in the Project.

I. If either party does not purchase or maintain the insurance required of such party by the Contract, such party shall notify the other party in writing of such failure to purchase prior to the start of the Work, or of such failure to maintain prior to any change in the required coverage.

J. If Contractor has failed to obtain and maintain required insurance, Contractor's entitlement to enter or remain at the Site will end immediately, and Owner may impose an appropriate set-off against payment for any associated costs (including but not limited to the cost of purchasing necessary insurance coverage), and exercise Owner's termination rights under Article 16.

K. Without prejudice to any other right or remedy, if a party has failed to obtain required insurance, the other party may elect (but is in no way obligated) to obtain equivalent insurance to protect such other party's interests at the expense of the party who was required to provide such coverage, and the Contract Price will be adjusted accordingly.

EJCDC® C-700, Standard General Conditions of the Construction Contract.
Copyright© 2018 National Society of Professional Engineers, American Council of Engineering Companies, and American Society of Civil Engineers. All rights reserved.

L. Owner does not represent that insurance coverage and limits established in this Contract necessarily will be adequate to protect Contractor or Contractor's interests. Contractor is responsible for determining whether such coverage and limits are adequate to protect its interests, and for obtaining and maintaining any additional insurance that Contractor deems necessary.

M. The insurance and insurance limits required herein will not be deemed as a limitation on Contractor's liability, or that of its Subcontractors or Suppliers, under the indemnities granted to Owner and other individuals and entities in the Contract or otherwise.

N. All the policies of insurance required to be purchased and maintained under this Contract will contain a provision or endorsement that the coverage afforded will not be canceled, or renewal refused, until at least 10 days prior written notice has been given to the purchasing policyholder. Within three days of receipt of any such written notice, the purchasing policyholder shall provide a copy of the notice to each other insured and Engineer.

6.03 *Contractor's Insurance*

A. *Required Insurance*: Contractor shall purchase and maintain Worker's Compensation, Commercial General Liability, and other insurance pursuant to the specific requirements of the Supplementary Conditions.

B. *General Provisions*: The policies of insurance required by this Paragraph 6.03 as supplemented must:

1. include at least the specific coverages required;

2. be written for not less than the limits provided, or those required by Laws or Regulations, whichever is greater;

3. remain in effect at least until the Work is complete (as set forth in Paragraph 15.06.D), and longer if expressly required elsewhere in this Contract, and at all times thereafter when Contractor may be correcting, removing, or replacing defective Work as a warranty or correction obligation, or otherwise, or returning to the Site to conduct other tasks arising from the Contract;

4. apply with respect to the performance of the Work, whether such performance is by Contractor, any Subcontractor or Supplier, or by anyone directly or indirectly employed by any of them to perform any of the Work, or by anyone for whose acts any of them may be liable; and

5. include all necessary endorsements to support the stated requirements.

C. *Additional Insureds*: The Contractor's commercial general liability, automobile liability, employer's liability, umbrella or excess, pollution liability, and unmanned aerial vehicle liability policies, if required by this Contract, must:

1. include and list as additional insureds Owner and Engineer, and any individuals or entities identified as additional insureds in the Supplementary Conditions;

2. include coverage for the respective officers, directors, members, partners, employees, and consultants of all such additional insureds;

3. afford primary coverage to these additional insureds for all claims covered thereby (including as applicable those arising from both ongoing and completed operations);

EJCDC® C-700, Standard General Conditions of the Construction Contract.
Copyright© 2018 National Society of Professional Engineers, American Council of Engineering Companies, and American Society of Civil Engineers. All rights reserved.

4. not seek contribution from insurance maintained by the additional insured; and

5. as to commercial general liability insurance, apply to additional insureds with respect to liability caused in whole or in part by Contractor's acts or omissions, or the acts and omissions of those working on Contractor's behalf, in the performance of Contractor's operations.

6.04 *Builder's Risk and Other Property Insurance*

A. *Builder's Risk*: Unless otherwise provided in the Supplementary Conditions, Contractor shall purchase and maintain builder's risk insurance upon the Work on a completed value basis, in the amount of the Work's full insurable replacement cost (subject to such deductible amounts as may be provided in the Supplementary Conditions or required by Laws and Regulations). The specific requirements applicable to the builder's risk insurance are set forth in the Supplementary Conditions.

B. *Property Insurance for Facilities of Owner Where Work Will Occur*: Owner is responsible for obtaining and maintaining property insurance covering each existing structure, building, or facility in which any part of the Work will occur, or to which any part of the Work will attach or be adjoined. Such property insurance will be written on a special perils (all-risk) form, on a replacement cost basis, providing coverage consistent with that required for the builder's risk insurance, and will be maintained until the Work is complete, as set forth in Paragraph 15.06.D.

C. *Property Insurance for Substantially Complete Facilities*: Promptly after Substantial Completion, and before actual occupancy or use of the substantially completed Work, Owner will obtain property insurance for such substantially completed Work, and maintain such property insurance at least until the Work is complete, as set forth in Paragraph 15.06.D. Such property insurance will be written on a special perils (all-risk) form, on a replacement cost basis, and provide coverage consistent with that required for the builder's risk insurance. The builder's risk insurance may terminate upon written confirmation of Owner's procurement of such property insurance.

D. *Partial Occupancy or Use by Owner*: If Owner will occupy or use a portion or portions of the Work prior to Substantial Completion of all the Work, as provided in Paragraph 15.04, then Owner (directly, if it is the purchaser of the builder's risk policy, or through Contractor) will provide advance notice of such occupancy or use to the builder's risk insurer, and obtain an endorsement consenting to the continuation of coverage prior to commencing such partial occupancy or use.

E. *Insurance of Other Property; Additional Insurance*: If the express insurance provisions of the Contract do not require or address the insurance of a property item or interest, then the entity or individual owning such property item will be responsible for insuring it. If Contractor elects to obtain other special insurance to be included in or supplement the builder's risk or property insurance policies provided under this Paragraph 6.04, it may do so at Contractor's expense.

6.05 *Property Losses; Subrogation*

A. The builder's risk insurance policy purchased and maintained in accordance with Paragraph 6.04 (or an installation floater policy if authorized by the Supplementary Conditions), will contain provisions to the effect that in the event of payment of any loss or damage the insurer will have no rights of recovery against any insureds thereunder, or against

EJCDC® C-700, Standard General Conditions of the Construction Contract.
Copyright© 2018 National Society of Professional Engineers, American Council of Engineering Companies, and American Society of Civil Engineers. All rights reserved.

Engineer or its consultants, or their officers, directors, members, partners, employees, agents, consultants, or subcontractors.

1. Owner and Contractor waive all rights against each other and the respective officers, directors, members, partners, employees, agents, consultants, and subcontractors of each and any of them, for all losses and damages caused by, arising out of, or resulting from any of the perils, risks, or causes of loss covered by such policies and any other property insurance applicable to the Work; and, in addition, waive all such rights against Engineer, its consultants, all individuals or entities identified in the Supplementary Conditions as builder's risk or installation floater insureds, and the officers, directors, members, partners, employees, agents, consultants, and subcontractors of each and any of them, under such policies for losses and damages so caused.
2. None of the above waivers extends to the rights that any party making such waiver may have to the proceeds of insurance held by Owner or Contractor as trustee or fiduciary, or otherwise payable under any policy so issued.

B. Any property insurance policy maintained by Owner covering any loss, damage, or consequential loss to Owner's existing structures, buildings, or facilities in which any part of the Work will occur, or to which any part of the Work will attach or adjoin; to adjacent structures, buildings, or facilities of Owner; or to part or all of the completed or substantially completed Work, during partial occupancy or use pursuant to Paragraph 15.04, after Substantial Completion pursuant to Paragraph 15.03, or after final payment pursuant to Paragraph 15.06, will contain provisions to the effect that in the event of payment of any loss or damage the insurer will have no rights of recovery against any insureds thereunder, or against Contractor, Subcontractors, or Engineer, or the officers, directors, members, partners, employees, agents, consultants, or subcontractors of each and any of them, and that the insured is allowed to waive the insurer's rights of subrogation in a written contract executed prior to the loss, damage, or consequential loss.

1. Owner waives all rights against Contractor, Subcontractors, and Engineer, and the officers, directors, members, partners, employees, agents, consultants and subcontractors of each and any of them, for all losses and damages caused by, arising out of, or resulting from fire or any of the perils, risks, or causes of loss covered by such policies.

C. The waivers in this Paragraph 6.05 include the waiver of rights due to business interruption, loss of use, or other consequential loss extending beyond direct physical loss or damage to Owner's property or the Work caused by, arising out of, or resulting from fire or other insured peril, risk, or cause of loss.

D. Contractor shall be responsible for assuring that each Subcontract contains provisions whereby the Subcontractor waives all rights against Owner, Contractor, all individuals or entities identified in the Supplementary Conditions as insureds, the Engineer and its consultants, and the officers, directors, members, partners, employees, agents, consultants, and subcontractors of each and any of them, for all losses and damages caused by, arising out of, relating to, or resulting from fire or other peril, risk, or cause of loss covered by builder's risk insurance, installation floater, and any other property insurance applicable to the Work.

EJCDC® C-700, Standard General Conditions of the Construction Contract.
Copyright© 2018 National Society of Professional Engineers, American Council of Engineering Companies, and American Society of Civil Engineers. All rights reserved.

6.06 *Receipt and Application of Property Insurance Proceeds*

A. Any insured loss under the builder's risk and other policies of property insurance required by Paragraph 6.04 will be adjusted and settled with the named insured that purchased the policy. Such named insured shall act as fiduciary for the other insureds, and give notice to such other insureds that adjustment and settlement of a claim is in progress. Any other insured may state its position regarding a claim for insured loss in writing within 15 days after notice of such claim.

B. Proceeds for such insured losses may be made payable by the insurer either jointly to multiple insureds, or to the named insured that purchased the policy in its own right and as fiduciary for other insureds, subject to the requirements of any applicable mortgage clause. A named insured receiving insurance proceeds under the builder's risk and other policies of insurance required by Paragraph 6.04 shall maintain such proceeds in a segregated account, and distribute such proceeds in accordance with such agreement as the parties in interest may reach, or as otherwise required under the dispute resolution provisions of this Contract or applicable Laws and Regulations.

C. If no other special agreement is reached, Contractor shall repair or replace the damaged Work, using allocated insurance proceeds.

ARTICLE 7—CONTRACTOR'S RESPONSIBILITIES

7.01 *Contractor's Means and Methods of Construction*

A. Contractor shall be solely responsible for the means, methods, techniques, sequences, and procedures of construction.

B. If the Contract Documents note, or Contractor determines, that professional engineering or other design services are needed to carry out Contractor's responsibilities for construction means, methods, techniques, sequences, and procedures, or for Site safety, then Contractor shall cause such services to be provided by a properly licensed design professional, at Contractor's expense. Such services are not Owner-delegated professional design services under this Contract, and neither Owner nor Engineer has any responsibility with respect to (1) Contractor's determination of the need for such services, (2) the qualifications or licensing of the design professionals retained or employed by Contractor, (3) the performance of such services, or (4) any errors, omissions, or defects in such services.

7.02 *Supervision and Superintendence*

A. Contractor shall supervise, inspect, and direct the Work competently and efficiently, devoting such attention thereto and applying such skills and expertise as may be necessary to perform the Work in accordance with the Contract Documents.

B. At all times during the progress of the Work, Contractor shall assign a competent resident superintendent who will not be replaced without written notice to Owner and Engineer except under extraordinary circumstances.

7.03 *Labor; Working Hours*

A. Contractor shall provide competent, suitably qualified personnel to survey and lay out the Work and perform construction as required by the Contract Documents. Contractor shall maintain good discipline and order at the Site.

EJCDC® C-700, Standard General Conditions of the Construction Contract.
Copyright© 2018 National Society of Professional Engineers, American Council of Engineering Companies, and American Society of Civil Engineers. All rights reserved.

B. Contractor shall be fully responsible to Owner and Engineer for all acts and omissions of Contractor's employees; of Suppliers and Subcontractors, and their employees; and of any other individuals or entities performing or furnishing any of the Work, just as Contractor is responsible for Contractor's own acts and omissions.

C. Except as otherwise required for the safety or protection of persons or the Work or property at the Site or adjacent thereto, and except as otherwise stated in the Contract Documents, all Work at the Site will be performed during regular working hours, Monday through Friday. Contractor will not perform Work on a Saturday, Sunday, or any legal holiday. Contractor may perform Work outside regular working hours or on Saturdays, Sundays, or legal holidays only with Owner's written consent, which will not be unreasonably withheld.

7.04 *Services, Materials, and Equipment*

A. Unless otherwise specified in the Contract Documents, Contractor shall provide and assume full responsibility for all services, materials, equipment, labor, transportation, construction equipment and machinery, tools, appliances, fuel, power, light, heat, telephone, water, sanitary facilities, temporary facilities, and all other facilities and incidentals necessary for the performance, testing, start up, and completion of the Work, whether or not such items are specifically called for in the Contract Documents.

B. All materials and equipment incorporated into the Work must be new and of good quality, except as otherwise provided in the Contract Documents. All special warranties and guarantees required by the Specifications will expressly run to the benefit of Owner. If required by Engineer, Contractor shall furnish satisfactory evidence (including reports of required tests) as to the source, kind, and quality of materials and equipment.

C. All materials and equipment must be stored, applied, installed, connected, erected, protected, used, cleaned, and conditioned in accordance with instructions of the applicable Supplier, except as otherwise may be provided in the Contract Documents.

7.05 *"Or Equals"*

A. *Contractor's Request; Governing Criteria*: Whenever an item of equipment or material is specified or described in the Contract Documents by using the names of one or more proprietary items or specific Suppliers, the Contract Price has been based upon Contractor furnishing such item as specified. The specification or description of such an item is intended to establish the type, function, appearance, and quality required. Unless the specification or description contains or is followed by words reading that no like, equivalent, or "or equal" item is permitted, Contractor may request that Engineer authorize the use of other items of equipment or material, or items from other proposed Suppliers, under the circumstances described below.

1. If Engineer in its sole discretion determines that an item of equipment or material proposed by Contractor is functionally equal to that named and sufficiently similar so that no change in related Work will be required, Engineer will deem it an "or equal" item. For the purposes of this paragraph, a proposed item of equipment or material will be considered functionally equal to an item so named if:

a. in the exercise of reasonable judgment Engineer determines that the proposed item:

1) is at least equal in materials of construction, quality, durability, appearance, strength, and design characteristics;

Copyright© 2018 National Society of Professional Engineers, American Council of Engineering Companies, and American Society of Civil Engineers. All rights reserved.

2) will reliably perform at least equally well the function and achieve the results imposed by the design concept of the completed Project as a functioning whole;

3) has a proven record of performance and availability of responsive service; and

4) is not objectionable to Owner.

b. Contractor certifies that, if the proposed item is approved and incorporated into the Work:

1) there will be no increase in cost to the Owner or increase in Contract Times; and

2) the item will conform substantially to the detailed requirements of the item named in the Contract Documents.

B. *Contractor's Expense*: Contractor shall provide all data in support of any proposed "or equal" item at Contractor's expense.

C. *Engineer's Evaluation and Determination*: Engineer will be allowed a reasonable time to evaluate each "or-equal" request. Engineer may require Contractor to furnish additional data about the proposed "or-equal" item. Engineer will be the sole judge of acceptability. No "or-equal" item will be ordered, furnished, installed, or utilized until Engineer's review is complete and Engineer determines that the proposed item is an "or-equal," which will be evidenced by an approved Shop Drawing or other written communication. Engineer will advise Contractor in writing of any negative determination.

D. *Effect of Engineer's Determination*: Neither approval nor denial of an "or-equal" request will result in any change in Contract Price. The Engineer's denial of an "or-equal" request will be final and binding, and may not be reversed through an appeal under any provision of the Contract.

E. *Treatment as a Substitution Request*: If Engineer determines that an item of equipment or material proposed by Contractor does not qualify as an "or-equal" item, Contractor may request that Engineer consider the item a proposed substitute pursuant to Paragraph 7.06.

7.06 *Substitutes*

A. *Contractor's Request; Governing Criteria*: Unless the specification or description of an item of equipment or material required to be furnished under the Contract Documents contains or is followed by words reading that no substitution is permitted, Contractor may request that Engineer authorize the use of other items of equipment or material under the circumstances described below. To the extent possible such requests must be made before commencement of related construction at the Site.

1. Contractor shall submit sufficient information as provided below to allow Engineer to determine if the item of material or equipment proposed is functionally equivalent to that named and an acceptable substitute therefor. Engineer will not accept requests for review of proposed substitute items of equipment or material from anyone other than Contractor.

2. The requirements for review by Engineer will be as set forth in Paragraph 7.06.B, as supplemented by the Specifications, and as Engineer may decide is appropriate under the circumstances.

Copyright© 2018 National Society of Professional Engineers, American Council of Engineering Companies, and American Society of Civil Engineers. All rights reserved.

3. Contractor shall make written application to Engineer for review of a proposed substitute item of equipment or material that Contractor seeks to furnish or use. The application:

   a. will certify that the proposed substitute item will:

      1) perform adequately the functions and achieve the results called for by the general design;

      2) be similar in substance to the item specified; and

      3) be suited to the same use as the item specified.

   b. will state:

      1) the extent, if any, to which the use of the proposed substitute item will necessitate a change in Contract Times;

      2) whether use of the proposed substitute item in the Work will require a change in any of the Contract Documents (or in the provisions of any other direct contract with Owner for other work on the Project) to adapt the design to the proposed substitute item; and

      3) whether incorporation or use of the proposed substitute item in connection with the Work is subject to payment of any license fee or royalty.

   c. will identify:

      1) all variations of the proposed substitute item from the item specified; and

      2) available engineering, sales, maintenance, repair, and replacement services.

   d. will contain an itemized estimate of all costs or credits that will result directly or indirectly from use of such substitute item, including but not limited to changes in Contract Price, shared savings, costs of redesign, and claims of other contractors affected by any resulting change.

B. *Engineer's Evaluation and Determination*: Engineer will be allowed a reasonable time to evaluate each substitute request, and to obtain comments and direction from Owner. Engineer may require Contractor to furnish additional data about the proposed substitute item. Engineer will be the sole judge of acceptability. No substitute will be ordered, furnished, installed, or utilized until Engineer's review is complete and Engineer determines that the proposed item is an acceptable substitute. Engineer's determination will be evidenced by a Field Order or a proposed Change Order accounting for the substitution itself and all related impacts, including changes in Contract Price or Contract Times. Engineer will advise Contractor in writing of any negative determination.

C. *Special Guarantee*: Owner may require Contractor to furnish at Contractor's expense a special performance guarantee or other surety with respect to any substitute.

D. *Reimbursement of Engineer's Cost*: Engineer will record Engineer's costs in evaluating a substitute proposed or submitted by Contractor. Whether or not Engineer approves a substitute so proposed or submitted by Contractor, Contractor shall reimburse Owner for the reasonable charges of Engineer for evaluating each such proposed substitute. Contractor shall also reimburse Owner for the reasonable charges of Engineer for making changes in the Contract Documents (or in the provisions of any other direct contract with Owner) resulting from the acceptance of each proposed substitute.

EJCDC® C-700, Standard General Conditions of the Construction Contract.
Copyright© 2018 National Society of Professional Engineers, American Council of Engineering Companies, and American Society of Civil Engineers. All rights reserved.

E. *Contractor's Expense*: Contractor shall provide all data in support of any proposed substitute at Contractor's expense.

F. *Effect of Engineer's Determination*: If Engineer approves the substitution request, Contractor shall execute the proposed Change Order and proceed with the substitution. The Engineer's denial of a substitution request will be final and binding, and may not be reversed through an appeal under any provision of the Contract. Contractor may challenge the scope of reimbursement costs imposed under Paragraph 7.06.D, by timely submittal of a Change Proposal.

7.07 *Concerning Subcontractors and Suppliers*

A. Contractor may retain Subcontractors and Suppliers for the performance of parts of the Work. Such Subcontractors and Suppliers must be acceptable to Owner. The Contractor's retention of a Subcontractor or Supplier for the performance of parts of the Work will not relieve Contractor's obligation to Owner to perform and complete the Work in accordance with the Contract Documents.

B. Contractor shall retain specific Subcontractors and Suppliers for the performance of designated parts of the Work if required by the Contract to do so.

C. Subsequent to the submittal of Contractor's Bid or final negotiation of the terms of the Contract, Owner may not require Contractor to retain any Subcontractor or Supplier to furnish or perform any of the Work against which Contractor has reasonable objection.

D. Prior to entry into any binding subcontract or purchase order, Contractor shall submit to Owner the identity of the proposed Subcontractor or Supplier (unless Owner has already deemed such proposed Subcontractor or Supplier acceptable during the bidding process or otherwise). Such proposed Subcontractor or Supplier shall be deemed acceptable to Owner unless Owner raises a substantive, reasonable objection within 5 days.

E. Owner may require the replacement of any Subcontractor or Supplier. Owner also may require Contractor to retain specific replacements; provided, however, that Owner may not require a replacement to which Contractor has a reasonable objection. If Contractor has submitted the identity of certain Subcontractors or Suppliers for acceptance by Owner, and Owner has accepted it (either in writing or by failing to make written objection thereto), then Owner may subsequently revoke the acceptance of any such Subcontractor or Supplier so identified solely on the basis of substantive, reasonable objection after due investigation. Contractor shall submit an acceptable replacement for the rejected Subcontractor or Supplier.

F. If Owner requires the replacement of any Subcontractor or Supplier retained by Contractor to perform any part of the Work, then Contractor shall be entitled to an adjustment in Contract Price or Contract Times, with respect to the replacement; and Contractor shall initiate a Change Proposal for such adjustment within 30 days of Owner's requirement of replacement.

G. No acceptance by Owner of any such Subcontractor or Supplier, whether initially or as a replacement, will constitute a waiver of the right of Owner to the completion of the Work in accordance with the Contract Documents.

EJCDC® C-700, Standard General Conditions of the Construction Contract.
Copyright© 2018 National Society of Professional Engineers, American Council of Engineering Companies, and American Society of Civil Engineers. All rights reserved.

H. On a monthly basis, Contractor shall submit to Engineer a complete list of all Subcontractors and Suppliers having a direct contract with Contractor, and of all other Subcontractors and Suppliers known to Contractor at the time of submittal.

I. Contractor shall be solely responsible for scheduling and coordinating the work of Subcontractors and Suppliers.

J. The divisions and sections of the Specifications and the identifications of any Drawings do not control Contractor in dividing the Work among Subcontractors or Suppliers, or in delineating the Work to be performed by any specific trade.

K. All Work performed for Contractor by a Subcontractor or Supplier must be pursuant to an appropriate contractual agreement that specifically binds the Subcontractor or Supplier to the applicable terms and conditions of the Contract for the benefit of Owner and Engineer.

L. Owner may furnish to any Subcontractor or Supplier, to the extent practicable, information about amounts paid to Contractor for Work performed for Contractor by the Subcontractor or Supplier.

M. Contractor shall restrict all Subcontractors and Suppliers from communicating with Engineer or Owner, except through Contractor or in case of an emergency, or as otherwise expressly allowed in this Contract.

7.08 *Patent Fees and Royalties*

A. Contractor shall pay all license fees and royalties and assume all costs incident to the use in the performance of the Work or the incorporation in the Work of any invention, design, process, product, or device which is the subject of patent rights or copyrights held by others. If an invention, design, process, product, or device is specified in the Contract Documents for use in the performance of the Work and if, to the actual knowledge of Owner or Engineer, its use is subject to patent rights or copyrights calling for the payment of any license fee or royalty to others, the existence of such rights will be disclosed in the Contract Documents.

B. To the fullest extent permitted by Laws and Regulations, Owner shall indemnify and hold harmless Contractor, and its officers, directors, members, partners, employees, agents, consultants, and subcontractors, from and against all claims, costs, losses, and damages (including but not limited to all fees and charges of engineers, architects, attorneys, and other professionals, and all court or arbitration or other dispute resolution costs) arising out of or relating to any infringement of patent rights or copyrights incident to the use in the performance of the Work or resulting from the incorporation in the Work of any invention, design, process, product, or device specified in the Contract Documents, but not identified as being subject to payment of any license fee or royalty to others required by patent rights or copyrights.

C. To the fullest extent permitted by Laws and Regulations, Contractor shall indemnify and hold harmless Owner and Engineer, and the officers, directors, members, partners, employees, agents, consultants and subcontractors of each and any of them, from and against all claims, costs, losses, and damages (including but not limited to all fees and charges of engineers, architects, attorneys, and other professionals and all court or arbitration or other dispute resolution costs) arising out of or relating to any infringement of patent rights or copyrights incident to the use in the performance of the Work or resulting from the incorporation in the Work of any invention, design, process, product, or device not specified in the Contract Documents.

EJCDC® C-700, Standard General Conditions of the Construction Contract.
Copyright© 2018 National Society of Professional Engineers, American Council of Engineering Companies, and American Society of Civil Engineers. All rights reserved.

7.09 *Permits*

A. Unless otherwise provided in the Contract Documents, Contractor shall obtain and pay for all construction permits, licenses, and certificates of occupancy. Owner shall assist Contractor, when necessary, in obtaining such permits and licenses. Contractor shall pay all governmental charges and inspection fees necessary for the prosecution of the Work which are applicable at the time of the submission of Contractor's Bid (or when Contractor became bound under a negotiated contract). Owner shall pay all charges of utility owners for connections for providing permanent service to the Work.

7.10 *Taxes*

A. Contractor shall pay all sales, consumer, use, and other similar taxes required to be paid by Contractor in accordance with the Laws and Regulations of the place of the Project which are applicable during the performance of the Work.

7.11 *Laws and Regulations*

A. Contractor shall give all notices required by and shall comply with all Laws and Regulations applicable to the performance of the Work. Neither Owner nor Engineer shall be responsible for monitoring Contractor's compliance with any Laws or Regulations.

B. If Contractor performs any Work or takes any other action knowing or having reason to know that it is contrary to Laws or Regulations, Contractor shall bear all resulting costs and losses, and shall indemnify and hold harmless Owner and Engineer, and the officers, directors, members, partners, employees, agents, consultants, and subcontractors of each and any of them, from and against all claims, costs, losses, and damages (including but not limited to all fees and charges of engineers, architects, attorneys, and other professionals and all court or arbitration or other dispute resolution costs) arising out of or relating to such Work or other action. It is not Contractor's responsibility to make certain that the Work described in the Contract Documents is in accordance with Laws and Regulations, but this does not relieve Contractor of its obligations under Paragraph 3.03.

C. Owner or Contractor may give written notice to the other party of any changes after the submission of Contractor's Bid (or after the date when Contractor became bound under a negotiated contract) in Laws or Regulations having an effect on the cost or time of performance of the Work, including but not limited to changes in Laws or Regulations having an effect on procuring permits and on sales, use, value-added, consumption, and other similar taxes. If Owner and Contractor are unable to agree on entitlement to or on the amount or extent, if any, of any adjustment in Contract Price or Contract Times resulting from such changes, then within 30 days of such written notice Contractor may submit a Change Proposal, or Owner may initiate a Claim.

7.12 *Record Documents*

A. Contractor shall maintain in a safe place at the Site one printed record copy of all Drawings, Specifications, Addenda, Change Orders, Work Change Directives, Field Orders, written interpretations and clarifications, and approved Shop Drawings. Contractor shall keep such record documents in good order and annotate them to show changes made during construction. These record documents, together with all approved Samples, will be available to Engineer for reference. Upon completion of the Work, Contractor shall deliver these record documents to Engineer.

EJCDC® C-700, Standard General Conditions of the Construction Contract.
Copyright© 2018 National Society of Professional Engineers, American Council of Engineering Companies, and American Society of Civil Engineers. All rights reserved.

7.13 *Safety and Protection*

A. Contractor shall be solely responsible for initiating, maintaining, and supervising all safety precautions and programs in connection with the Work. Such responsibility does not relieve Subcontractors of their responsibility for the safety of persons or property in the performance of their work, nor for compliance with applicable safety Laws and Regulations.

B. Contractor shall designate a qualified and experienced safety representative whose duties and responsibilities are the prevention of Work-related accidents and the maintenance and supervision of safety precautions and programs.

C. Contractor shall take all necessary precautions for the safety of, and shall provide the necessary protection to prevent damage, injury, or loss to:

1. all persons on the Site or who may be affected by the Work;

2. all the Work and materials and equipment to be incorporated therein, whether in storage on or off the Site; and

3. other property at the Site or adjacent thereto, including trees, shrubs, lawns, walks, pavements, roadways, structures, other work in progress, utilities, and Underground Facilities not designated for removal, relocation, or replacement in the course of construction.

D. All damage, injury, or loss to any property referred to in Paragraph 7.13.C.2 or 7.13.C.3 caused, directly or indirectly, in whole or in part, by Contractor, any Subcontractor, Supplier, or any other individual or entity directly or indirectly employed by any of them to perform any of the Work, or anyone for whose acts any of them may be liable, shall be remedied by Contractor at its expense (except damage or loss attributable to the fault of Drawings or Specifications or to the acts or omissions of Owner or Engineer or anyone employed by any of them, or anyone for whose acts any of them may be liable, and not attributable, directly or indirectly, in whole or in part, to the fault or negligence of Contractor or any Subcontractor, Supplier, or other individual or entity directly or indirectly employed by any of them).

E. Contractor shall comply with all applicable Laws and Regulations relating to the safety of persons or property, or to the protection of persons or property from damage, injury, or loss; and shall erect and maintain all necessary safeguards for such safety and protection.

F. Contractor shall notify Owner; the owners of adjacent property; the owners of Underground Facilities and other utilities (if the identity of such owners is known to Contractor); and other contractors and utility owners performing work at or adjacent to the Site, in writing, when Contractor knows that prosecution of the Work may affect them, and shall cooperate with them in the protection, removal, relocation, and replacement of their property or work in progress.

G. Contractor shall comply with the applicable requirements of Owner's safety programs, if any. Any Owner's safety programs that are applicable to the Work are identified or included in the Supplementary Conditions or Specifications.

H. Contractor shall inform Owner and Engineer of the specific requirements of Contractor's safety program with which Owner's and Engineer's employees and representatives must comply while at the Site.

EJCDC® C-700, Standard General Conditions of the Construction Contract.
Copyright© 2018 National Society of Professional Engineers, American Council of Engineering Companies, and American Society of Civil Engineers. All rights reserved.

I. Contractor's duties and responsibilities for safety and protection will continue until all the Work is completed, Engineer has issued a written notice to Owner and Contractor in accordance with Paragraph 15.06.C that the Work is acceptable, and Contractor has left the Site (except as otherwise expressly provided in connection with Substantial Completion).

J. Contractor's duties and responsibilities for safety and protection will resume whenever Contractor or any Subcontractor or Supplier returns to the Site to fulfill warranty or correction obligations, or to conduct other tasks arising from the Contract Documents.

7.14 *Hazard Communication Programs*

A. Contractor shall be responsible for coordinating any exchange of safety data sheets (formerly known as material safety data sheets) or other hazard communication information required to be made available to or exchanged between or among employers at the Site in accordance with Laws or Regulations.

7.15 *Emergencies*

A. In emergencies affecting the safety or protection of persons or the Work or property at the Site or adjacent thereto, Contractor is obligated to act to prevent damage, injury, or loss. Contractor shall give Engineer prompt written notice if Contractor believes that any significant changes in the Work or variations from the Contract Documents have been caused by an emergency, or are required as a result of Contractor's response to an emergency. If Engineer determines that a change in the Contract Documents is required because of an emergency or Contractor's response, a Work Change Directive or Change Order will be issued.

7.16 *Submittals*

A. *Shop Drawing and Sample Requirements*

1. Before submitting a Shop Drawing or Sample, Contractor shall:

a. review and coordinate the Shop Drawing or Sample with other Shop Drawings and Samples and with the requirements of the Work and the Contract Documents;

b. determine and verify:

1) all field measurements, quantities, dimensions, specified performance and design criteria, installation requirements, materials, catalog numbers, and similar information with respect to the Submittal;

2) the suitability of all materials and equipment offered with respect to the indicated application, fabrication, shipping, handling, storage, assembly, and installation pertaining to the performance of the Work; and

3) all information relative to Contractor's responsibilities for means, methods, techniques, sequences, and procedures of construction, and safety precautions and programs incident thereto;

c. confirm that the Submittal is complete with respect to all related data included in the Submittal.

2. Each Shop Drawing or Sample must bear a stamp or specific written certification that Contractor has satisfied Contractor's obligations under the Contract Documents with respect to Contractor's review of that Submittal, and that Contractor approves the Submittal.

Copyright© 2018 National Society of Professional Engineers, American Council of Engineering Companies, and American Society of Civil Engineers. All rights reserved.

3. With each Shop Drawing or Sample, Contractor shall give Engineer specific written notice of any variations that the Submittal may have from the requirements of the Contract Documents. This notice must be set forth in a written communication separate from the Submittal; and, in addition, in the case of a Shop Drawing by a specific notation made on the Shop Drawing itself.

B. *Submittal Procedures for Shop Drawings and Samples*: Contractor shall label and submit Shop Drawings and Samples to Engineer for review and approval in accordance with the accepted Schedule of Submittals.

1. *Shop Drawings*

a. Contractor shall submit the number of copies required in the Specifications.

b. Data shown on the Shop Drawings must be complete with respect to quantities, dimensions, specified performance and design criteria, materials, and similar data to show Engineer the services, materials, and equipment Contractor proposes to provide, and to enable Engineer to review the information for the limited purposes required by Paragraph 7.16.C.

2. *Samples*

a. Contractor shall submit the number of Samples required in the Specifications.

b. Contractor shall clearly identify each Sample as to material, Supplier, pertinent data such as catalog numbers, the use for which intended and other data as Engineer may require to enable Engineer to review the Submittal for the limited purposes required by Paragraph 7.16.C.

3. Where a Shop Drawing or Sample is required by the Contract Documents or the Schedule of Submittals, any related Work performed prior to Engineer's review and approval of the pertinent submittal will be at the sole expense and responsibility of Contractor.

C. *Engineer's Review of Shop Drawings and Samples*

1. Engineer will provide timely review of Shop Drawings and Samples in accordance with the accepted Schedule of Submittals. Engineer's review and approval will be only to determine if the items covered by the Submittals will, after installation or incorporation in the Work, comply with the requirements of the Contract Documents, and be compatible with the design concept of the completed Project as a functioning whole as indicated by the Contract Documents.

2. Engineer's review and approval will not extend to means, methods, techniques, sequences, or procedures of construction, or to safety precautions or programs incident thereto.

3. Engineer's review and approval of a separate item as such will not indicate approval of the assembly in which the item functions.

4. Engineer's review and approval of a Shop Drawing or Sample will not relieve Contractor from responsibility for any variation from the requirements of the Contract Documents unless Contractor has complied with the requirements of Paragraph 7.16.A.3 and Engineer has given written approval of each such variation by specific written notation thereof incorporated in or accompanying the Shop Drawing or Sample. Engineer will

EJCDC® C-700, Standard General Conditions of the Construction Contract.
Copyright© 2018 National Society of Professional Engineers, American Council of Engineering Companies, and American Society of Civil Engineers. All rights reserved.

document any such approved variation from the requirements of the Contract Documents in a Field Order or other appropriate Contract modification.

5. Engineer's review and approval of a Shop Drawing or Sample will not relieve Contractor from responsibility for complying with the requirements of Paragraphs 7.16.A and B.

6. Engineer's review and approval of a Shop Drawing or Sample, or of a variation from the requirements of the Contract Documents, will not, under any circumstances, change the Contract Times or Contract Price, unless such changes are included in a Change Order.

7. Neither Engineer's receipt, review, acceptance, or approval of a Shop Drawing or Sample will result in such item becoming a Contract Document.

8. Contractor shall perform the Work in compliance with the requirements and commitments set forth in approved Shop Drawings and Samples, subject to the provisions of Paragraph 7.16.C.4.

D. *Resubmittal Procedures for Shop Drawings and Samples*

1. Contractor shall make corrections required by Engineer and shall return the required number of corrected copies of Shop Drawings and submit, as required, new Samples for review and approval. Contractor shall direct specific attention in writing to revisions other than the corrections called for by Engineer on previous Submittals.

2. Contractor shall furnish required Shop Drawing and Sample submittals with sufficient information and accuracy to obtain required approval of an item with no more than two resubmittals. Engineer will record Engineer's time for reviewing a third or subsequent resubmittal of a Shop Drawing or Sample, and Contractor shall be responsible for Engineer's charges to Owner for such time. Owner may impose a set-off against payments due Contractor to secure reimbursement for such charges.

3. If Contractor requests a change of a previously approved Shop Drawing or Sample, Contractor shall be responsible for Engineer's charges to Owner for its review time, and Owner may impose a set-off against payments due Contractor to secure reimbursement for such charges, unless the need for such change is beyond the control of Contractor.

E. *Submittals Other than Shop Drawings, Samples, and Owner-Delegated Designs*

1. The following provisions apply to all Submittals other than Shop Drawings, Samples, and Owner-delegated designs:

   a. Contractor shall submit all such Submittals to the Engineer in accordance with the Schedule of Submittals and pursuant to the applicable terms of the Contract Documents.

   b. Engineer will provide timely review of all such Submittals in accordance with the Schedule of Submittals and return such Submittals with a notation of either Accepted or Not Accepted. Any such Submittal that is not returned within the time established in the Schedule of Submittals will be deemed accepted.

   c. Engineer's review will be only to determine if the Submittal is acceptable under the requirements of the Contract Documents as to general form and content of the Submittal.

EJCDC® C-700, Standard General Conditions of the Construction Contract.
Copyright© 2018 National Society of Professional Engineers, American Council of Engineering Companies, and American Society of Civil Engineers. All rights reserved.

d. If any such Submittal is not accepted, Contractor shall confer with Engineer regarding the reason for the non-acceptance, and resubmit an acceptable document.

2. Procedures for the submittal and acceptance of the Progress Schedule, the Schedule of Submittals, and the Schedule of Values are set forth in Paragraphs 2.03. 2.04, and 2.05.

F. Owner-delegated Designs: Submittals pursuant to Owner-delegated designs are governed by the provisions of Paragraph 7.19.

7.17 *Contractor's General Warranty and Guarantee*

A. Contractor warrants and guarantees to Owner that all Work will be in accordance with the Contract Documents and will not be defective. Engineer is entitled to rely on Contractor's warranty and guarantee.

B. Owner's rights under this warranty and guarantee are in addition to, and are not limited by, Owner's rights under the correction period provisions of Paragraph 15.08. The time in which Owner may enforce its warranty and guarantee rights under this Paragraph 7.17 is limited only by applicable Laws and Regulations restricting actions to enforce such rights; provided, however, that after the end of the correction period under Paragraph 15.08:

1. Owner shall give Contractor written notice of any defective Work within 60 days of the discovery that such Work is defective; and

2. Such notice will be deemed the start of an event giving rise to a Claim under Paragraph 12.01.B, such that any related Claim must be brought within 30 days of the notice.

C. Contractor's warranty and guarantee hereunder excludes defects or damage caused by:

1. abuse, or improper modification, maintenance, or operation, by persons other than Contractor, Subcontractors, Suppliers, or any other individual or entity for whom Contractor is responsible; or

2. normal wear and tear under normal usage.

D. Contractor's obligation to perform and complete the Work in accordance with the Contract Documents is absolute. None of the following will constitute an acceptance of Work that is not in accordance with the Contract Documents, a release of Contractor's obligation to perform the Work in accordance with the Contract Documents, or a release of Owner's warranty and guarantee rights under this Paragraph 7.17:

1. Observations by Engineer;

2. Recommendation by Engineer or payment by Owner of any progress or final payment;

3. The issuance of a certificate of Substantial Completion by Engineer or any payment related thereto by Owner;

4. Use or occupancy of the Work or any part thereof by Owner;

5. Any review and approval of a Shop Drawing or Sample submittal;

6. The issuance of a notice of acceptability by Engineer;

7. The end of the correction period established in Paragraph 15.08;

8. Any inspection, test, or approval by others; or

EJCDC® C-700, Standard General Conditions of the Construction Contract.
Copyright© 2018 National Society of Professional Engineers, American Council of Engineering Companies, and American Society of Civil Engineers. All rights reserved.

9. Any correction of defective Work by Owner.

E. If the Contract requires the Contractor to accept the assignment of a contract entered into by Owner, then the specific warranties, guarantees, and correction obligations contained in the assigned contract will govern with respect to Contractor's performance obligations to Owner for the Work described in the assigned contract.

7.18 *Indemnification*

A. To the fullest extent permitted by Laws and Regulations, and in addition to any other obligations of Contractor under the Contract or otherwise, Contractor shall indemnify and hold harmless Owner and Engineer, and the officers, directors, members, partners, employees, agents, consultants and subcontractors of each and any of them, from losses, damages, costs, and judgments (including but not limited to all fees and charges of engineers, architects, attorneys, and other professionals, and all court or arbitration or other dispute resolution costs) arising from third-party claims or actions relating to or resulting from the performance or furnishing of the Work, provided that any such claim, action, loss, cost, judgment or damage is attributable to bodily injury, sickness, disease, or death, or to damage to or destruction of tangible property (other than the Work itself), including the loss of use resulting therefrom, but only to the extent caused by any negligent act or omission of Contractor, any Subcontractor, any Supplier, or any individual or entity directly or indirectly employed by any of them to perform any of the Work, or anyone for whose acts any of them may be liable.

B. In any and all claims against Owner or Engineer, or any of their officers, directors, members, partners, employees, agents, consultants, or subcontractors, by any employee (or the survivor or personal representative of such employee) of Contractor, any Subcontractor, any Supplier, or any individual or entity directly or indirectly employed by any of them to perform any of the Work, or anyone for whose acts any of them may be liable, the indemnification obligation under Paragraph 7.18.A will not be limited in any way by any limitation on the amount or type of damages, compensation, or benefits payable by or for Contractor or any such Subcontractor, Supplier, or other individual or entity under workers' compensation acts, disability benefit acts, or other employee benefit acts.

7.19 *Delegation of Professional Design Services*

A. Owner may require Contractor to provide professional design services for a portion of the Work by express delegation in the Contract Documents. Such delegation will specify the performance and design criteria that such services must satisfy, and the Submittals that Contractor must furnish to Engineer with respect to the Owner-delegated design.

B. Contractor shall cause such Owner-delegated professional design services to be provided pursuant to the professional standard of care by a properly licensed design professional, whose signature and seal must appear on all drawings, calculations, specifications, certifications, and Submittals prepared by such design professional. Such design professional must issue all certifications of design required by Laws and Regulations.

C. If a Shop Drawing or other Submittal related to the Owner-delegated design is prepared by Contractor, a Subcontractor, or others for submittal to Engineer, then such Shop Drawing or other Submittal must bear the written approval of Contractor's design professional when submitted by Contractor to Engineer.

EJCDC® C-700, Standard General Conditions of the Construction Contract.
Copyright© 2018 National Society of Professional Engineers, American Council of Engineering Companies, and American Society of Civil Engineers. All rights reserved.

D. Owner and Engineer shall be entitled to rely upon the adequacy, accuracy, and completeness of the services, certifications, and approvals performed or provided by the design professionals retained or employed by Contractor under an Owner-delegated design, subject to the professional standard of care and the performance and design criteria stated in the Contract Documents.

E. Pursuant to this Paragraph 7.19, Engineer's review, approval, and other determinations regarding design drawings, calculations, specifications, certifications, and other Submittals furnished by Contractor pursuant to an Owner-delegated design will be only for the following limited purposes:

1. Checking for conformance with the requirements of this Paragraph 7.19;

2. Confirming that Contractor (through its design professionals) has used the performance and design criteria specified in the Contract Documents; and

3. Establishing that the design furnished by Contractor is consistent with the design concept expressed in the Contract Documents.

F. Contractor shall not be responsible for the adequacy of performance or design criteria specified by Owner or Engineer.

G. Contractor is not required to provide professional services in violation of applicable Laws and Regulations.

ARTICLE 8—OTHER WORK AT THE SITE

8.01 *Other Work*

A. In addition to and apart from the Work under the Contract Documents, the Owner may perform other work at or adjacent to the Site. Such other work may be performed by Owner's employees, or through contracts between the Owner and third parties. Owner may also arrange to have third-party utility owners perform work on their utilities and facilities at or adjacent to the Site.

B. If Owner performs other work at or adjacent to the Site with Owner's employees, or through contracts for such other work, then Owner shall give Contractor written notice thereof prior to starting any such other work. If Owner has advance information regarding the start of any third-party utility work that Owner has arranged to take place at or adjacent to the Site, Owner shall provide such information to Contractor.

C. Contractor shall afford proper and safe access to the Site to each contractor that performs such other work, each utility owner performing other work, and Owner, if Owner is performing other work with Owner's employees, and provide a reasonable opportunity for the introduction and storage of materials and equipment and the execution of such other work.

D. Contractor shall do all cutting, fitting, and patching of the Work that may be required to properly connect or otherwise make its several parts come together and properly integrate with such other work. Contractor shall not endanger any work of others by cutting, excavating, or otherwise altering such work; provided, however, that Contractor may cut or alter others' work with the written consent of Engineer and the others whose work will be affected.

EJCDC® C-700, Standard General Conditions of the Construction Contract.
Copyright© 2018 National Society of Professional Engineers, American Council of Engineering Companies, and American Society of Civil Engineers. All rights reserved.

E. If the proper execution or results of any part of Contractor's Work depends upon work performed by others, Contractor shall inspect such other work and promptly report to Engineer in writing any delays, defects, or deficiencies in such other work that render it unavailable or unsuitable for the proper execution and results of Contractor's Work. Contractor's failure to so report will constitute an acceptance of such other work as fit and proper for integration with Contractor's Work except for latent defects and deficiencies in such other work.

F. The provisions of this article are not applicable to work that is performed by third-party utilities or other third-party entities without a contract with Owner, or that is performed without having been arranged by Owner. If such work occurs, then any related delay, disruption, or interference incurred by Contractor is governed by the provisions of Paragraph 4.05.C.3.

8.02 *Coordination*

A. If Owner intends to contract with others for the performance of other work at or adjacent to the Site, to perform other work at or adjacent to the Site with Owner's employees, or to arrange to have utility owners perform work at or adjacent to the Site, the following will be set forth in the Supplementary Conditions or provided to Contractor prior to the start of any such other work:

1. The identity of the individual or entity that will have authority and responsibility for coordination of the activities among the various contractors;

2. An itemization of the specific matters to be covered by such authority and responsibility; and

3. The extent of such authority and responsibilities.

B. Unless otherwise provided in the Supplementary Conditions, Owner shall have sole authority and responsibility for such coordination.

8.03 *Legal Relationships*

A. If, in the course of performing other work for Owner at or adjacent to the Site, the Owner's employees, any other contractor working for Owner, or any utility owner that Owner has arranged to perform work, causes damage to the Work or to the property of Contractor or its Subcontractors, or delays, disrupts, interferes with, or increases the scope or cost of the performance of the Work, through actions or inaction, then Contractor shall be entitled to an equitable adjustment in the Contract Price or the Contract Times. Contractor must submit any Change Proposal seeking an equitable adjustment in the Contract Price or the Contract Times under this paragraph within 30 days of the damaging, delaying, disrupting, or interfering event. The entitlement to, and extent of, any such equitable adjustment will take into account information (if any) regarding such other work that was provided to Contractor in the Contract Documents prior to the submittal of the Bid or the final negotiation of the terms of the Contract, and any remedies available to Contractor under Laws or Regulations concerning utility action or inaction. When applicable, any such equitable adjustment in Contract Price will be conditioned on Contractor assigning to Owner all Contractor's rights against such other contractor or utility owner with respect to the damage, delay, disruption, or interference that is the subject of the adjustment. Contractor's entitlement to an adjustment of the Contract Times or Contract Price is subject to the provisions of Paragraphs 4.05.D and 4.05.E.

EJCDC® C-700, Standard General Conditions of the Construction Contract.
Copyright© 2018 National Society of Professional Engineers, American Council of Engineering Companies, and American Society of Civil Engineers. All rights reserved.

B. Contractor shall take reasonable and customary measures to avoid damaging, delaying, disrupting, or interfering with the work of Owner, any other contractor, or any utility owner performing other work at or adjacent to the Site.

1. If Contractor fails to take such measures and as a result damages, delays, disrupts, or interferes with the work of any such other contractor or utility owner, then Owner may impose a set-off against payments due Contractor, and assign to such other contractor or utility owner the Owner's contractual rights against Contractor with respect to the breach of the obligations set forth in this Paragraph 8.03.B.

2. When Owner is performing other work at or adjacent to the Site with Owner's employees, Contractor shall be liable to Owner for damage to such other work, and for the reasonable direct delay, disruption, and interference costs incurred by Owner as a result of Contractor's failure to take reasonable and customary measures with respect to Owner's other work. In response to such damage, delay, disruption, or interference, Owner may impose a set-off against payments due Contractor.

C. If Contractor damages, delays, disrupts, or interferes with the work of any other contractor, or any utility owner performing other work at or adjacent to the Site, through Contractor's failure to take reasonable and customary measures to avoid such impacts, or if any claim arising out of Contractor's actions, inactions, or negligence in performance of the Work at or adjacent to the Site is made by any such other contractor or utility owner against Contractor, Owner, or Engineer, then Contractor shall (1) promptly attempt to settle the claim as to all parties through negotiations with such other contractor or utility owner, or otherwise resolve the claim by arbitration or other dispute resolution proceeding or at law, and (2) indemnify and hold harmless Owner and Engineer, and the officers, directors, members, partners, employees, agents, consultants and subcontractors of each and any of them from and against any such claims, and against all costs, losses, and damages (including but not limited to all fees and charges of engineers, architects, attorneys, and other professionals and all court or arbitration or other dispute resolution costs) arising out of or relating to such damage, delay, disruption, or interference.

ARTICLE 9—OWNER'S RESPONSIBILITIES

9.01 *Communications to Contractor*

A. Except as otherwise provided in these General Conditions, Owner shall issue all communications to Contractor through Engineer.

9.02 *Replacement of Engineer*

A. Owner may at its discretion appoint an engineer to replace Engineer, provided Contractor makes no reasonable objection to the replacement engineer. The replacement engineer's status under the Contract Documents will be that of the former Engineer.

9.03 *Furnish Data*

A. Owner shall promptly furnish the data required of Owner under the Contract Documents.

9.04 *Pay When Due*

A. Owner shall make payments to Contractor when they are due as provided in the Agreement.

EJCDC® C-700, Standard General Conditions of the Construction Contract.
Copyright© 2018 National Society of Professional Engineers, American Council of Engineering Companies, and American Society of Civil Engineers. All rights reserved.

9.05 *Lands and Easements; Reports, Tests, and Drawings*

A. Owner's duties with respect to providing lands and easements are set forth in Paragraph 5.01.

B. Owner's duties with respect to providing engineering surveys to establish reference points are set forth in Paragraph 4.03.

C. Article 5 refers to Owner's identifying and making available to Contractor copies of reports of explorations and tests of conditions at the Site, and drawings of physical conditions relating to existing surface or subsurface structures at the Site.

9.06 *Insurance*

A. Owner's responsibilities, if any, with respect to purchasing and maintaining liability and property insurance are set forth in Article 6.

9.07 *Change Orders*

A. Owner's responsibilities with respect to Change Orders are set forth in Article 11.

9.08 *Inspections, Tests, and Approvals*

A. Owner's responsibility with respect to certain inspections, tests, and approvals is set forth in Paragraph 14.02.B.

9.09 *Limitations on Owner's Responsibilities*

A. The Owner shall not supervise, direct, or have control or authority over, nor be responsible for, Contractor's means, methods, techniques, sequences, or procedures of construction, or the safety precautions and programs incident thereto, or for any failure of Contractor to comply with Laws and Regulations applicable to the performance of the Work. Owner will not be responsible for Contractor's failure to perform the Work in accordance with the Contract Documents.

9.10 *Undisclosed Hazardous Environmental Condition*

A. Owner's responsibility in respect to an undisclosed Hazardous Environmental Condition is set forth in Paragraph 5.06.

9.11 *Evidence of Financial Arrangements*

A. Upon request of Contractor, Owner shall furnish Contractor reasonable evidence that financial arrangements have been made to satisfy Owner's obligations under the Contract (including obligations under proposed changes in the Work).

9.12 *Safety Programs*

A. While at the Site, Owner's employees and representatives shall comply with the specific applicable requirements of Contractor's safety programs of which Owner has been informed.

B. Owner shall furnish copies of any applicable Owner safety programs to Contractor.

EJCDC® C-700, Standard General Conditions of the Construction Contract.
Copyright© 2018 National Society of Professional Engineers, American Council of Engineering Companies, and American Society of Civil Engineers. All rights reserved.

ARTICLE 10—ENGINEER'S STATUS DURING CONSTRUCTION

10.01 *Owner's Representative*

A. Engineer will be Owner's representative during the construction period. The duties and responsibilities and the limitations of authority of Engineer as Owner's representative during construction are set forth in the Contract.

10.02 *Visits to Site*

A. Engineer will make visits to the Site at intervals appropriate to the various stages of construction as Engineer deems necessary in order to observe, as an experienced and qualified design professional, the progress that has been made and the quality of the various aspects of Contractor's executed Work. Based on information obtained during such visits and observations, Engineer, for the benefit of Owner, will determine, in general, if the Work is proceeding in accordance with the Contract Documents. Engineer will not be required to make exhaustive or continuous inspections on the Site to check the quality or quantity of the Work. Engineer's efforts will be directed toward providing for Owner a greater degree of confidence that the completed Work will conform generally to the Contract Documents. On the basis of such visits and observations, Engineer will keep Owner informed of the progress of the Work and will endeavor to guard Owner against defective Work.

B. Engineer's visits and observations are subject to all the limitations on Engineer's authority and responsibility set forth in Paragraph 10.07. Particularly, but without limitation, during or as a result of Engineer's visits or observations of Contractor's Work, Engineer will not supervise, direct, control, or have authority over or be responsible for Contractor's means, methods, techniques, sequences, or procedures of construction, or the safety precautions and programs incident thereto, or for any failure of Contractor to comply with Laws and Regulations applicable to the performance of the Work.

10.03 *Resident Project Representative*

A. If Owner and Engineer have agreed that Engineer will furnish a Resident Project Representative to represent Engineer at the Site and assist Engineer in observing the progress and quality of the Work, then the authority and responsibilities of any such Resident Project Representative will be as provided in the Supplementary Conditions, and limitations on the responsibilities thereof will be as provided in the Supplementary Conditions and in Paragraph 10.07.

B. If Owner designates an individual or entity who is not Engineer's consultant, agent, or employee to represent Owner at the Site, then the responsibilities and authority of such individual or entity will be as provided in the Supplementary Conditions.

10.04 *Engineer's Authority*

A. Engineer has the authority to reject Work in accordance with Article 14.

B. Engineer's authority as to Submittals is set forth in Paragraph 7.16.

C. Engineer's authority as to design drawings, calculations, specifications, certifications and other Submittals from Contractor in response to Owner's delegation (if any) to Contractor of professional design services, is set forth in Paragraph 7.19.

D. Engineer's authority as to changes in the Work is set forth in Article 11.

EJCDC® C-700, Standard General Conditions of the Construction Contract.
Copyright© 2018 National Society of Professional Engineers, American Council of Engineering Companies, and American Society of Civil Engineers. All rights reserved.

E. Engineer's authority as to Applications for Payment is set forth in Article 15.

10.05 *Determinations for Unit Price Work*

A. Engineer will determine the actual quantities and classifications of Unit Price Work performed by Contractor as set forth in Paragraph 13.03.

10.06 *Decisions on Requirements of Contract Documents and Acceptability of Work*

A. Engineer will render decisions regarding the requirements of the Contract Documents, and judge the acceptability of the Work, pursuant to the specific procedures set forth herein for initial interpretations, Change Proposals, and acceptance of the Work. In rendering such decisions and judgments, Engineer will not show partiality to Owner or Contractor, and will not be liable to Owner, Contractor, or others in connection with any proceedings, interpretations, decisions, or judgments conducted or rendered in good faith.

10.07 *Limitations on Engineer's Authority and Responsibilities*

A. Neither Engineer's authority or responsibility under this Article 10 or under any other provision of the Contract, nor any decision made by Engineer in good faith either to exercise or not exercise such authority or responsibility or the undertaking, exercise, or performance of any authority or responsibility by Engineer, will create, impose, or give rise to any duty in contract, tort, or otherwise owed by Engineer to Contractor, any Subcontractor, any Supplier, any other individual or entity, or to any surety for or employee or agent of any of them.

B. Engineer will not supervise, direct, control, or have authority over or be responsible for Contractor's means, methods, techniques, sequences, or procedures of construction, or the safety precautions and programs incident thereto, or for any failure of Contractor to comply with Laws and Regulations applicable to the performance of the Work. Engineer will not be responsible for Contractor's failure to perform the Work in accordance with the Contract Documents.

C. Engineer will not be responsible for the acts or omissions of Contractor or of any Subcontractor, any Supplier, or of any other individual or entity performing any of the Work.

D. Engineer's review of the final Application for Payment and accompanying documentation, and all maintenance and operating instructions, schedules, guarantees, bonds, certificates of inspection, tests and approvals, and other documentation required to be delivered by Contractor under Paragraph 15.06.A, will only be to determine generally that their content complies with the requirements of, and in the case of certificates of inspections, tests, and approvals, that the results certified indicate compliance with the Contract Documents.

E. The limitations upon authority and responsibility set forth in this Paragraph 10.07 also apply to the Resident Project Representative, if any.

10.08 *Compliance with Safety Program*

A. While at the Site, Engineer's employees and representatives will comply with the specific applicable requirements of Owner's and Contractor's safety programs of which Engineer has been informed.

EJCDC® C-700, Standard General Conditions of the Construction Contract.
Copyright© 2018 National Society of Professional Engineers, American Council of Engineering Companies, and American Society of Civil Engineers. All rights reserved.

ARTICLE 11—CHANGES TO THE CONTRACT

11.01 *Amending and Supplementing the Contract*

A. The Contract may be amended or supplemented by a Change Order, a Work Change Directive, or a Field Order.

B. If an amendment or supplement to the Contract includes a change in the Contract Price or the Contract Times, such amendment or supplement must be set forth in a Change Order.

C. All changes to the Contract that involve (1) the performance or acceptability of the Work, (2) the design (as set forth in the Drawings, Specifications, or otherwise), or (3) other engineering or technical matters, must be supported by Engineer's recommendation. Owner and Contractor may amend other terms and conditions of the Contract without the recommendation of the Engineer.

11.02 *Change Orders*

A. Owner and Contractor shall execute appropriate Change Orders covering:

1. Changes in Contract Price or Contract Times which are agreed to by the parties, including any undisputed sum or amount of time for Work actually performed in accordance with a Work Change Directive;

2. Changes in Contract Price resulting from an Owner set-off, unless Contractor has duly contested such set-off;

3. Changes in the Work which are: (a) ordered by Owner pursuant to Paragraph 11.05, (b) required because of Owner's acceptance of defective Work under Paragraph 14.04 or Owner's correction of defective Work under Paragraph 14.07, or (c) agreed to by the parties, subject to the need for Engineer's recommendation if the change in the Work involves the design (as set forth in the Drawings, Specifications, or otherwise) or other engineering or technical matters; and

4. Changes that embody the substance of any final and binding results under: Paragraph 11.03.B, resolving the impact of a Work Change Directive; Paragraph 11.09, concerning Change Proposals; Article 12, Claims; Paragraph 13.02.D, final adjustments resulting from allowances; Paragraph 13.03.D, final adjustments relating to determination of quantities for Unit Price Work; and similar provisions.

B. If Owner or Contractor refuses to execute a Change Order that is required to be executed under the terms of Paragraph 11.02.A, it will be deemed to be of full force and effect, as if fully executed.

11.03 *Work Change Directives*

A. A Work Change Directive will not change the Contract Price or the Contract Times but is evidence that the parties expect that the modification ordered or documented by a Work Change Directive will be incorporated in a subsequently issued Change Order, following negotiations by the parties as to the Work Change Directive's effect, if any, on the Contract Price and Contract Times; or, if negotiations are unsuccessful, by a determination under the terms of the Contract Documents governing adjustments, expressly including Paragraph 11.07 regarding change of Contract Price.

EJCDC® C-700, Standard General Conditions of the Construction Contract.
Copyright© 2018 National Society of Professional Engineers, American Council of Engineering Companies, and American Society of Civil Engineers. All rights reserved.

B. If Owner has issued a Work Change Directive and:

1. Contractor believes that an adjustment in Contract Times or Contract Price is necessary, then Contractor shall submit any Change Proposal seeking such an adjustment no later than 30 days after the completion of the Work set out in the Work Change Directive.

2. Owner believes that an adjustment in Contract Times or Contract Price is necessary, then Owner shall submit any Claim seeking such an adjustment no later than 60 days after issuance of the Work Change Directive.

11.04 *Field Orders*

A. Engineer may authorize minor changes in the Work if the changes do not involve an adjustment in the Contract Price or the Contract Times and are compatible with the design concept of the completed Project as a functioning whole as indicated by the Contract Documents. Such changes will be accomplished by a Field Order and will be binding on Owner and also on Contractor, which shall perform the Work involved promptly.

B. If Contractor believes that a Field Order justifies an adjustment in the Contract Price or Contract Times, then before proceeding with the Work at issue, Contractor shall submit a Change Proposal as provided herein.

11.05 *Owner-Authorized Changes in the Work*

A. Without invalidating the Contract and without notice to any surety, Owner may, at any time or from time to time, order additions, deletions, or revisions in the Work. Changes involving the design (as set forth in the Drawings, Specifications, or otherwise) or other engineering or technical matters will be supported by Engineer's recommendation.

B. Such changes in the Work may be accomplished by a Change Order, if Owner and Contractor have agreed as to the effect, if any, of the changes on Contract Times or Contract Price; or by a Work Change Directive. Upon receipt of any such document, Contractor shall promptly proceed with the Work involved; or, in the case of a deletion in the Work, promptly cease construction activities with respect to such deleted Work. Added or revised Work must be performed under the applicable conditions of the Contract Documents.

C. Nothing in this Paragraph 11.05 obligates Contractor to undertake work that Contractor reasonably concludes cannot be performed in a manner consistent with Contractor's safety obligations under the Contract Documents or Laws and Regulations.

11.06 *Unauthorized Changes in the Work*

A. Contractor shall not be entitled to an increase in the Contract Price or an extension of the Contract Times with respect to any work performed that is not required by the Contract Documents, as amended, modified, or supplemented, except in the case of an emergency as provided in Paragraph 7.15 or in the case of uncovering Work as provided in Paragraph 14.05.C.2.

11.07 *Change of Contract Price*

A. The Contract Price may only be changed by a Change Order. Any Change Proposal for an adjustment in the Contract Price must comply with the provisions of Paragraph 11.09. Any Claim for an adjustment of Contract Price must comply with the provisions of Article 12.

B. An adjustment in the Contract Price will be determined as follows:

EJCDC® C-700, Standard General Conditions of the Construction Contract.
Copyright© 2018 National Society of Professional Engineers, American Council of Engineering Companies, and American Society of Civil Engineers. All rights reserved.

1. Where the Work involved is covered by unit prices contained in the Contract Documents, then by application of such unit prices to the quantities of the items involved (subject to the provisions of Paragraph 13.03);
2. Where the Work involved is not covered by unit prices contained in the Contract Documents, then by a mutually agreed lump sum (which may include an allowance for overhead and profit not necessarily in accordance with Paragraph 11.07.C.2); or
3. Where the Work involved is not covered by unit prices contained in the Contract Documents and the parties do not reach mutual agreement to a lump sum, then on the basis of the Cost of the Work (determined as provided in Paragraph 13.01) plus a Contractor's fee for overhead and profit (determined as provided in Paragraph 11.07.C).

C. *Contractor's Fee*: When applicable, the Contractor's fee for overhead and profit will be determined as follows:

1. A mutually acceptable fixed fee; or
2. If a fixed fee is not agreed upon, then a fee based on the following percentages of the various portions of the Cost of the Work:
    a. For costs incurred under Paragraphs 13.01.B.1 and 13.01.B.2, the Contractor's fee will be 15 percent;
    b. For costs incurred under Paragraph 13.01.B.3, the Contractor's fee will be 5 percent;
    c. Where one or more tiers of subcontracts are on the basis of Cost of the Work plus a fee and no fixed fee is agreed upon, the intent of Paragraphs 11.07.C.2.a and 11.07.C.2.b is that the Contractor's fee will be based on: (1) a fee of 15 percent of the costs incurred under Paragraphs 13.01.B.1 and 13.01.B.2 by the Subcontractor that actually performs the Work, at whatever tier, and (2) with respect to Contractor itself and to any Subcontractors of a tier higher than that of the Subcontractor that actually performs the Work, a fee of 5 percent of the amount (fee plus underlying costs incurred) attributable to the next lower tier Subcontractor; provided, however, that for any such subcontracted Work the maximum total fee to be paid by Owner will be no greater than 27 percent of the costs incurred by the Subcontractor that actually performs the Work;
    d. No fee will be payable on the basis of costs itemized under Paragraphs 13.01.B.4, 13.01.B.5, and 13.01.C;
    e. The amount of credit to be allowed by Contractor to Owner for any change which results in a net decrease in Cost of the Work will be the amount of the actual net decrease in Cost of the Work and a deduction of an additional amount equal to 5 percent of such actual net decrease in Cost of the Work; and
    f. When both additions and credits are involved in any one change or Change Proposal, the adjustment in Contractor's fee will be computed by determining the sum of the costs in each of the cost categories in Paragraph 13.01.B (specifically, payroll costs, Paragraph 13.01.B.1; incorporated materials and equipment costs, Paragraph 13.01.B.2; Subcontract costs, Paragraph 13.01.B.3; special consultants costs, Paragraph 13.01.B.4; and other costs, Paragraph 13.01.B.5) and applying to each such cost category sum the appropriate fee from Paragraphs 11.07.C.2.a through 11.07.C.2.e, inclusive.

EJCDC® C-700, Standard General Conditions of the Construction Contract.
Copyright© 2018 National Society of Professional Engineers, American Council of Engineering Companies, and American Society of Civil Engineers. All rights reserved.

11.08 *Change of Contract Times*

A. The Contract Times may only be changed by a Change Order. Any Change Proposal for an adjustment in the Contract Times must comply with the provisions of Paragraph 11.09. Any Claim for an adjustment in the Contract Times must comply with the provisions of Article 12.

B. Delay, disruption, and interference in the Work, and any related changes in Contract Times, are addressed in and governed by Paragraph 4.05.

11.09 *Change Proposals*

A. *Purpose and Content*: Contractor shall submit a Change Proposal to Engineer to request an adjustment in the Contract Times or Contract Price; contest an initial decision by Engineer concerning the requirements of the Contract Documents or relating to the acceptability of the Work under the Contract Documents; challenge a set-off against payment due; or seek other relief under the Contract. The Change Proposal will specify any proposed change in Contract Times or Contract Price, or other proposed relief, and explain the reason for the proposed change, with citations to any governing or applicable provisions of the Contract Documents. Each Change Proposal will address only one issue, or a set of closely related issues.

B. *Change Proposal Procedures*

1. *Submittal*: Contractor shall submit each Change Proposal to Engineer within 30 days after the start of the event giving rise thereto, or after such initial decision.

2. *Supporting Data*: The Contractor shall submit supporting data, including the proposed change in Contract Price or Contract Time (if any), to the Engineer and Owner within 15 days after the submittal of the Change Proposal.

    a. Change Proposals based on or related to delay, interruption, or interference must comply with the provisions of Paragraphs 4.05.D and 4.05.E.

    b. Change proposals related to a change of Contract Price must include full and detailed accounts of materials incorporated into the Work and labor and equipment used for the subject Work.

    The supporting data must be accompanied by a written statement that the supporting data are accurate and complete, and that any requested time or price adjustment is the entire adjustment to which Contractor believes it is entitled as a result of said event.

3. *Engineer's Initial Review*: Engineer will advise Owner regarding the Change Proposal, and consider any comments or response from Owner regarding the Change Proposal. If in its discretion Engineer concludes that additional supporting data is needed before conducting a full review and making a decision regarding the Change Proposal, then Engineer may request that Contractor submit such additional supporting data by a date specified by Engineer, prior to Engineer beginning its full review of the Change Proposal.

4. *Engineer's Full Review and Action on the Change Proposal*: Upon receipt of Contractor's supporting data (including any additional data requested by Engineer), Engineer will conduct a full review of each Change Proposal and, within 30 days after such receipt of the Contractor's supporting data, either approve the Change Proposal in whole, deny it in whole, or approve it in part and deny it in part. Such actions must be in writing, with a copy provided to Owner and Contractor. If Engineer does not take action on the Change

EJCDC® C-700, Standard General Conditions of the Construction Contract.
Copyright© 2018 National Society of Professional Engineers, American Council of Engineering Companies, and American Society of Civil Engineers. All rights reserved.

Proposal within 30 days, then either Owner or Contractor may at any time thereafter submit a letter to the other party indicating that as a result of Engineer's inaction the Change Proposal is deemed denied, thereby commencing the time for appeal of the denial under Article 12.

5. *Binding Decision*: Engineer's decision is final and binding upon Owner and Contractor, unless Owner or Contractor appeals the decision by filing a Claim under Article 12.

C. *Resolution of Certain Change Proposals*: If the Change Proposal does not involve the design (as set forth in the Drawings, Specifications, or otherwise), the acceptability of the Work, or other engineering or technical matters, then Engineer will notify the parties in writing that the Engineer is unable to resolve the Change Proposal. For purposes of further resolution of such a Change Proposal, such notice will be deemed a denial, and Contractor may choose to seek resolution under the terms of Article 12.

D. *Post-Completion*: Contractor shall not submit any Change Proposals after Engineer issues a written recommendation of final payment pursuant to Paragraph 15.06.B.

11.10 *Notification to Surety*

A. If the provisions of any bond require notice to be given to a surety of any change affecting the general scope of the Work or the provisions of the Contract Documents (including, but not limited to, Contract Price or Contract Times), the giving of any such notice will be Contractor's responsibility. The amount of each applicable bond will be adjusted to reflect the effect of any such change.

ARTICLE 12—CLAIMS

12.01 *Claims*

A. *Claims Process*: The following disputes between Owner and Contractor are subject to the Claims process set forth in this article:

1. Appeals by Owner or Contractor of Engineer's decisions regarding Change Proposals;

2. Owner demands for adjustments in the Contract Price or Contract Times, or other relief under the Contract Documents;

3. Disputes that Engineer has been unable to address because they do not involve the design (as set forth in the Drawings, Specifications, or otherwise), the acceptability of the Work, or other engineering or technical matters; and

4. Subject to the waiver provisions of Paragraph 15.07, any dispute arising after Engineer has issued a written recommendation of final payment pursuant to Paragraph 15.06.B.

B. *Submittal of Claim*: The party submitting a Claim shall deliver it directly to the other party to the Contract promptly (but in no event later than 30 days) after the start of the event giving rise thereto; in the case of appeals regarding Change Proposals within 30 days of the decision under appeal. The party submitting the Claim shall also furnish a copy to the Engineer, for its information only. The responsibility to substantiate a Claim rests with the party making the Claim. In the case of a Claim by Contractor seeking an increase in the Contract Times or Contract Price, Contractor shall certify that the Claim is made in good faith, that the supporting data are accurate and complete, and that to the best of Contractor's knowledge

EJCDC® C-700, Standard General Conditions of the Construction Contract.
Copyright© 2018 National Society of Professional Engineers, American Council of Engineering Companies, and American Society of Civil Engineers. All rights reserved.

and belief the amount of time or money requested accurately reflects the full amount to which Contractor is entitled.

C. *Review and Resolution*: The party receiving a Claim shall review it thoroughly, giving full consideration to its merits. The two parties shall seek to resolve the Claim through the exchange of information and direct negotiations. The parties may extend the time for resolving the Claim by mutual agreement. All actions taken on a Claim will be stated in writing and submitted to the other party, with a copy to Engineer.

D. *Mediation*

1. At any time after initiation of a Claim, Owner and Contractor may mutually agree to mediation of the underlying dispute. The agreement to mediate will stay the Claim submittal and response process.

2. If Owner and Contractor agree to mediation, then after 60 days from such agreement, either Owner or Contractor may unilaterally terminate the mediation process, and the Claim submittal and decision process will resume as of the date of the termination. If the mediation proceeds but is unsuccessful in resolving the dispute, the Claim submittal and decision process will resume as of the date of the conclusion of the mediation, as determined by the mediator.

3. Owner and Contractor shall each pay one-half of the mediator's fees and costs.

E. *Partial Approval*: If the party receiving a Claim approves the Claim in part and denies it in part, such action will be final and binding unless within 30 days of such action the other party invokes the procedure set forth in Article 17 for final resolution of disputes.

F. *Denial of Claim*: If efforts to resolve a Claim are not successful, the party receiving the Claim may deny it by giving written notice of denial to the other party. If the receiving party does not take action on the Claim within 90 days, then either Owner or Contractor may at any time thereafter submit a letter to the other party indicating that as a result of the inaction, the Claim is deemed denied, thereby commencing the time for appeal of the denial. A denial of the Claim will be final and binding unless within 30 days of the denial the other party invokes the procedure set forth in Article 17 for the final resolution of disputes.

G. *Final and Binding Results*: If the parties reach a mutual agreement regarding a Claim, whether through approval of the Claim, direct negotiations, mediation, or otherwise; or if a Claim is approved in part and denied in part, or denied in full, and such actions become final and binding; then the results of the agreement or action on the Claim will be incorporated in a Change Order or other written document to the extent they affect the Contract, including the Work, the Contract Times, or the Contract Price.

ARTICLE 13—COST OF THE WORK; ALLOWANCES; UNIT PRICE WORK

13.01 *Cost of the Work*

A. *Purposes for Determination of Cost of the Work*: The term Cost of the Work means the sum of all costs necessary for the proper performance of the Work at issue, as further defined below. The provisions of this Paragraph 13.01 are used for two distinct purposes:

1. To determine Cost of the Work when Cost of the Work is a component of the Contract Price, under cost-plus-fee, time-and-materials, or other cost-based terms; or

EJCDC® C-700, Standard General Conditions of the Construction Contract.
Copyright© 2018 National Society of Professional Engineers, American Council of Engineering Companies, and American Society of Civil Engineers. All rights reserved.

2. When needed to determine the value of a Change Order, Change Proposal, Claim, set-off, or other adjustment in Contract Price. When the value of any such adjustment is determined on the basis of Cost of the Work, Contractor is entitled only to those additional or incremental costs required because of the change in the Work or because of the event giving rise to the adjustment.

B. *Costs Included*: Except as otherwise may be agreed to in writing by Owner, costs included in the Cost of the Work will be in amounts no higher than those commonly incurred in the locality of the Project, will not include any of the costs itemized in Paragraph 13.01.C, and will include only the following items:

1. Payroll costs for employees in the direct employ of Contractor in the performance of the Work under schedules of job classifications agreed upon by Owner and Contractor in advance of the subject Work. Such employees include, without limitation, superintendents, foremen, safety managers, safety representatives, and other personnel employed full time on the Work. Payroll costs for employees not employed full time on the Work will be apportioned on the basis of their time spent on the Work. Payroll costs include, but are not limited to, salaries and wages plus the cost of fringe benefits, which include social security contributions, unemployment, excise, and payroll taxes, workers' compensation, health and retirement benefits, sick leave, and vacation and holiday pay applicable thereto. The expenses of performing Work outside of regular working hours, on Saturday, Sunday, or legal holidays, will be included in the above to the extent authorized by Owner.

2. Cost of all materials and equipment furnished and incorporated in the Work, including costs of transportation and storage thereof, and Suppliers' field services required in connection therewith. All cash discounts accrue to Contractor unless Owner deposits funds with Contractor with which to make payments, in which case the cash discounts will accrue to Owner. All trade discounts, rebates, and refunds and returns from sale of surplus materials and equipment will accrue to Owner, and Contractor shall make provisions so that they may be obtained.

3. Payments made by Contractor to Subcontractors for Work performed by Subcontractors. If required by Owner, Contractor shall obtain competitive bids from subcontractors acceptable to Owner and Contractor and shall deliver such bids to Owner, which will then determine, with the advice of Engineer, which bids, if any, will be acceptable. If any subcontract provides that the Subcontractor is to be paid on the basis of Cost of the Work plus a fee, the Subcontractor's Cost of the Work and fee will be determined in the same manner as Contractor's Cost of the Work and fee as provided in this Paragraph 13.01.

4. Costs of special consultants (including but not limited to engineers, architects, testing laboratories, surveyors, attorneys, and accountants) employed or retained for services specifically related to the Work.

5. Other costs consisting of the following:

a. The proportion of necessary transportation, travel, and subsistence expenses of Contractor's employees incurred in discharge of duties connected with the Work.

b. Cost, including transportation and maintenance, of all materials, supplies, equipment, machinery, appliances, office, and temporary facilities at the Site, which are

Copyright© 2018 National Society of Professional Engineers, American Council of Engineering Companies, and American Society of Civil Engineers. All rights reserved.

consumed in the performance of the Work, and cost, less market value, of such items used but not consumed which remain the property of Contractor.

1) In establishing included costs for materials such as scaffolding, plating, or sheeting, consideration will be given to the actual or the estimated life of the material for use on other projects; or rental rates may be established on the basis of purchase or salvage value of such items, whichever is less. Contractor will not be eligible for compensation for such items in an amount that exceeds the purchase cost of such item.

c. *Construction Equipment Rental*

1) Rentals of all construction equipment and machinery, and the parts thereof, in accordance with rental agreements approved by Owner as to price (including any surcharge or special rates applicable to overtime use of the construction equipment or machinery), and the costs of transportation, loading, unloading, assembly, dismantling, and removal thereof. All such costs will be in accordance with the terms of said rental agreements. The rental of any such equipment, machinery, or parts must cease when the use thereof is no longer necessary for the Work.

2) Costs for equipment and machinery owned by Contractor or a Contractor-related entity will be paid at a rate shown for such equipment in the equipment rental rate book specified in the Supplementary Conditions. An hourly rate will be computed by dividing the monthly rates by 176. These computed rates will include all operating costs.

3) With respect to Work that is the result of a Change Order, Change Proposal, Claim, set-off, or other adjustment in Contract Price ("changed Work"), included costs will be based on the time the equipment or machinery is in use on the changed Work and the costs of transportation, loading, unloading, assembly, dismantling, and removal when directly attributable to the changed Work. The cost of any such equipment or machinery, or parts thereof, must cease to accrue when the use thereof is no longer necessary for the changed Work.

d. Sales, consumer, use, and other similar taxes related to the Work, and for which Contractor is liable, as imposed by Laws and Regulations.

e. Deposits lost for causes other than negligence of Contractor, any Subcontractor, or anyone directly or indirectly employed by any of them or for whose acts any of them may be liable, and royalty payments and fees for permits and licenses.

f. Losses and damages (and related expenses) caused by damage to the Work, not compensated by insurance or otherwise, sustained by Contractor in connection with the performance of the Work (except losses and damages within the deductible amounts of builder's risk or other property insurance established in accordance with Paragraph 6.04), provided such losses and damages have resulted from causes other than the negligence of Contractor, any Subcontractor, or anyone directly or indirectly employed by any of them or for whose acts any of them may be liable. Such losses include settlements made with the written consent and approval of Owner. No such losses, damages, and expenses will be included in the Cost of the Work for the purpose of determining Contractor's fee.

EJCDC® C-700, Standard General Conditions of the Construction Contract.
Copyright© 2018 National Society of Professional Engineers, American Council of Engineering Companies, and American Society of Civil Engineers. All rights reserved.

g. The cost of utilities, fuel, and sanitary facilities at the Site.

h. Minor expenses such as communication service at the Site, express and courier services, and similar petty cash items in connection with the Work.

i. The costs of premiums for all bonds and insurance that Contractor is required by the Contract Documents to purchase and maintain.

C. *Costs Excluded*: The term Cost of the Work does not include any of the following items:

1. Payroll costs and other compensation of Contractor's officers, executives, principals, general managers, engineers, architects, estimators, attorneys, auditors, accountants, purchasing and contracting agents, expediters, timekeepers, clerks, and other personnel employed by Contractor, whether at the Site or in Contractor's principal or branch office for general administration of the Work and not specifically included in the agreed upon schedule of job classifications referred to in Paragraph 13.01.B.1 or specifically covered by Paragraph 13.01.B.4. The payroll costs and other compensation excluded here are to be considered administrative costs covered by the Contractor's fee.

2. The cost of purchasing, renting, or furnishing small tools and hand tools.

3. Expenses of Contractor's principal and branch offices other than Contractor's office at the Site.

4. Any part of Contractor's capital expenses, including interest on Contractor's capital employed for the Work and charges against Contractor for delinquent payments.

5. Costs due to the negligence of Contractor, any Subcontractor, or anyone directly or indirectly employed by any of them or for whose acts any of them may be liable, including but not limited to, the correction of defective Work, disposal of materials or equipment wrongly supplied, and making good any damage to property.

6. Expenses incurred in preparing and advancing Claims.

7. Other overhead or general expense costs of any kind and the costs of any item not specifically and expressly included in Paragraph 13.01.B.

D. *Contractor's Fee*

1. When the Work as a whole is performed on the basis of cost-plus-a-fee, then:

a. Contractor's fee for the Work set forth in the Contract Documents as of the Effective Date of the Contract will be determined as set forth in the Agreement.

b. for any Work covered by a Change Order, Change Proposal, Claim, set-off, or other adjustment in Contract Price on the basis of Cost of the Work, Contractor's fee will be determined as follows:

1) When the fee for the Work as a whole is a percentage of the Cost of the Work, the fee will automatically adjust as the Cost of the Work changes.

2) When the fee for the Work as a whole is a fixed fee, the fee for any additions or deletions will be determined in accordance with Paragraph 11.07.C.2.

2. When the Work as a whole is performed on the basis of a stipulated sum, or any other basis other than cost-plus-a-fee, then Contractor's fee for any Work covered by a Change

EJCDC® C-700, Standard General Conditions of the Construction Contract.
Copyright© 2018 National Society of Professional Engineers, American Council of Engineering Companies, and American Society of Civil Engineers. All rights reserved.

Order, Change Proposal, Claim, set-off, or other adjustment in Contract Price on the basis of Cost of the Work will be determined in accordance with Paragraph 11.07.C.2.

E. *Documentation and Audit*: Whenever the Cost of the Work for any purpose is to be determined pursuant to this Article 13, Contractor and pertinent Subcontractors will establish and maintain records of the costs in accordance with generally accepted accounting practices. Subject to prior written notice, Owner will be afforded reasonable access, during normal business hours, to all Contractor's accounts, records, books, correspondence, instructions, drawings, receipts, vouchers, memoranda, and similar data relating to the Cost of the Work and Contractor's fee. Contractor shall preserve all such documents for a period of three years after the final payment by Owner. Pertinent Subcontractors will afford such access to Owner, and preserve such documents, to the same extent required of Contractor.

13.02 *Allowances*

A. It is understood that Contractor has included in the Contract Price all allowances so named in the Contract Documents and shall cause the Work so covered to be performed for such sums and by such persons or entities as may be acceptable to Owner and Engineer.

B. *Cash Allowances*: Contractor agrees that:

1. the cash allowances include the cost to Contractor (less any applicable trade discounts) of materials and equipment required by the allowances to be delivered at the Site, and all applicable taxes; and

2. Contractor's costs for unloading and handling on the Site, labor, installation, overhead, profit, and other expenses contemplated for the cash allowances have been included in the Contract Price and not in the allowances, and no demand for additional payment for any of the foregoing will be valid.

C. *Owner's Contingency Allowance*: Contractor agrees that an Owner's contingency allowance, if any, is for the sole use of Owner to cover unanticipated costs.

D. Prior to final payment, an appropriate Change Order will be issued as recommended by Engineer to reflect actual amounts due Contractor for Work covered by allowances, and the Contract Price will be correspondingly adjusted.

13.03 *Unit Price Work*

A. Where the Contract Documents provide that all or part of the Work is to be Unit Price Work, initially the Contract Price will be deemed to include for all Unit Price Work an amount equal to the sum of the unit price for each separately identified item of Unit Price Work times the estimated quantity of each item as indicated in the Agreement.

B. The estimated quantities of items of Unit Price Work are not guaranteed and are solely for the purpose of comparison of Bids and determining an initial Contract Price. Payments to Contractor for Unit Price Work will be based on actual quantities.

C. Each unit price will be deemed to include an amount considered by Contractor to be adequate to cover Contractor's overhead and profit for each separately identified item.

D. Engineer will determine the actual quantities and classifications of Unit Price Work performed by Contractor. Engineer will review with Contractor the Engineer's preliminary determinations on such matters before rendering a written decision thereon (by recommendation of an Application for Payment or otherwise). Engineer's written decision

EJCDC® C-700, Standard General Conditions of the Construction Contract.
Copyright© 2018 National Society of Professional Engineers, American Council of Engineering Companies, and American Society of Civil Engineers. All rights reserved.

thereon will be final and binding (except as modified by Engineer to reflect changed factual conditions or more accurate data) upon Owner and Contractor, and the final adjustment of Contract Price will be set forth in a Change Order, subject to the provisions of the following paragraph.

E. *Adjustments in Unit Price*

1. Contractor or Owner shall be entitled to an adjustment in the unit price with respect to an item of Unit Price Work if:

a. the quantity of the item of Unit Price Work performed by Contractor differs materially and significantly from the estimated quantity of such item indicated in the Agreement; and

b. Contractor's unit costs to perform the item of Unit Price Work have changed materially and significantly as a result of the quantity change.

2. The adjustment in unit price will account for and be coordinated with any related changes in quantities of other items of Work, and in Contractor's costs to perform such other Work, such that the resulting overall change in Contract Price is equitable to Owner and Contractor.

3. Adjusted unit prices will apply to all units of that item.

ARTICLE 14—TESTS AND INSPECTIONS; CORRECTION, REMOVAL, OR ACCEPTANCE OF DEFECTIVE WORK

14.01 *Access to Work*

A. Owner, Engineer, their consultants and other representatives and personnel of Owner, independent testing laboratories, and authorities having jurisdiction have access to the Site and the Work at reasonable times for their observation, inspection, and testing. Contractor shall provide them proper and safe conditions for such access and advise them of Contractor's safety procedures and programs so that they may comply with such procedures and programs as applicable.

14.02 *Tests, Inspections, and Approvals*

A. Contractor shall give Engineer timely notice of readiness of the Work (or specific parts thereof) for all required inspections and tests, and shall cooperate with inspection and testing personnel to facilitate required inspections and tests.

B. Owner shall retain and pay for the services of an independent inspector, testing laboratory, or other qualified individual or entity to perform all inspections and tests expressly required by the Contract Documents to be furnished and paid for by Owner, except that costs incurred in connection with tests or inspections of covered Work will be governed by the provisions of Paragraph 14.05.

C. If Laws or Regulations of any public body having jurisdiction require any Work (or part thereof) specifically to be inspected, tested, or approved by an employee or other representative of such public body, Contractor shall assume full responsibility for arranging and obtaining such inspections, tests, or approvals, pay all costs in connection therewith, and furnish Engineer the required certificates of inspection or approval.

EJCDC® C-700, Standard General Conditions of the Construction Contract.
Copyright© 2018 National Society of Professional Engineers, American Council of Engineering Companies, and American Society of Civil Engineers. All rights reserved.

D. Contractor shall be responsible for arranging, obtaining, and paying for all inspections and tests required:

1. by the Contract Documents, unless the Contract Documents expressly allocate responsibility for a specific inspection or test to Owner;

2. to attain Owner's and Engineer's acceptance of materials or equipment to be incorporated in the Work;

3. by manufacturers of equipment furnished under the Contract Documents;

4. for testing, adjusting, and balancing of mechanical, electrical, and other equipment to be incorporated into the Work; and

5. for acceptance of materials, mix designs, or equipment submitted for approval prior to Contractor's purchase thereof for incorporation in the Work.

Such inspections and tests will be performed by independent inspectors, testing laboratories, or other qualified individuals or entities acceptable to Owner and Engineer.

E. If the Contract Documents require the Work (or part thereof) to be approved by Owner, Engineer, or another designated individual or entity, then Contractor shall assume full responsibility for arranging and obtaining such approvals.

F. If any Work (or the work of others) that is to be inspected, tested, or approved is covered by Contractor without written concurrence of Engineer, Contractor shall, if requested by Engineer, uncover such Work for observation. Such uncovering will be at Contractor's expense unless Contractor had given Engineer timely notice of Contractor's intention to cover the same and Engineer had not acted with reasonable promptness in response to such notice.

14.03 *Defective Work*

A. *Contractor's Obligation*: It is Contractor's obligation to assure that the Work is not defective.

B. *Engineer's Authority*: Engineer has the authority to determine whether Work is defective, and to reject defective Work.

C. *Notice of Defects*: Prompt written notice of all defective Work of which Owner or Engineer has actual knowledge will be given to Contractor.

D. *Correction, or Removal and Replacement*: Promptly after receipt of written notice of defective Work, Contractor shall correct all such defective Work, whether or not fabricated, installed, or completed, or, if Engineer has rejected the defective Work, remove it from the Project and replace it with Work that is not defective.

E. *Preservation of Warranties*: When correcting defective Work, Contractor shall take no action that would void or otherwise impair Owner's special warranty and guarantee, if any, on said Work.

F. *Costs and Damages*: In addition to its correction, removal, and replacement obligations with respect to defective Work, Contractor shall pay all claims, costs, losses, and damages arising out of or relating to defective Work, including but not limited to the cost of the inspection, testing, correction, removal, replacement, or reconstruction of such defective Work, fines levied against Owner by governmental authorities because the Work is defective, and the costs of repair or replacement of work of others resulting from defective Work. Prior to final payment, if Owner and Contractor are unable to agree as to the measure of such claims, costs,

EJCDC® C-700, Standard General Conditions of the Construction Contract.
Copyright© 2018 National Society of Professional Engineers, American Council of Engineering Companies, and American Society of Civil Engineers. All rights reserved.

losses, and damages resulting from defective Work, then Owner may impose a reasonable set-off against payments due under Article 15.

14.04 *Acceptance of Defective Work*

A. If, instead of requiring correction or removal and replacement of defective Work, Owner prefers to accept it, Owner may do so (subject, if such acceptance occurs prior to final payment, to Engineer's confirmation that such acceptance is in general accord with the design intent and applicable engineering principles, and will not endanger public safety). Contractor shall pay all claims, costs, losses, and damages attributable to Owner's evaluation of and determination to accept such defective Work (such costs to be approved by Engineer as to reasonableness), and for the diminished value of the Work to the extent not otherwise paid by Contractor. If any such acceptance occurs prior to final payment, the necessary revisions in the Contract Documents with respect to the Work will be incorporated in a Change Order. If the parties are unable to agree as to the decrease in the Contract Price, reflecting the diminished value of Work so accepted, then Owner may impose a reasonable set-off against payments due under Article 15. If the acceptance of defective Work occurs after final payment, Contractor shall pay an appropriate amount to Owner.

14.05 *Uncovering Work*

A. Engineer has the authority to require additional inspection or testing of the Work, whether or not the Work is fabricated, installed, or completed.

B. If any Work is covered contrary to the written request of Engineer, then Contractor shall, if requested by Engineer, uncover such Work for Engineer's observation, and then replace the covering, all at Contractor's expense.

C. If Engineer considers it necessary or advisable that covered Work be observed by Engineer or inspected or tested by others, then Contractor, at Engineer's request, shall uncover, expose, or otherwise make available for observation, inspection, or testing as Engineer may require, that portion of the Work in question, and provide all necessary labor, material, and equipment.

1. If it is found that the uncovered Work is defective, Contractor shall be responsible for all claims, costs, losses, and damages arising out of or relating to such uncovering, exposure, observation, inspection, and testing, and of satisfactory replacement or reconstruction (including but not limited to all costs of repair or replacement of work of others); and pending Contractor's full discharge of this responsibility the Owner shall be entitled to impose a reasonable set-off against payments due under Article 15.

2. If the uncovered Work is not found to be defective, Contractor shall be allowed an increase in the Contract Price or an extension of the Contract Times, directly attributable to such uncovering, exposure, observation, inspection, testing, replacement, and reconstruction. If the parties are unable to agree as to the amount or extent thereof, then Contractor may submit a Change Proposal within 30 days of the determination that the Work is not defective.

14.06 *Owner May Stop the Work*

A. If the Work is defective, or Contractor fails to supply sufficient skilled workers or suitable materials or equipment, or fails to perform the Work in such a way that the completed Work will conform to the Contract Documents, then Owner may order Contractor to stop the Work,

EJCDC® C-700, Standard General Conditions of the Construction Contract.
Copyright© 2018 National Society of Professional Engineers, American Council of Engineering Companies, and American Society of Civil Engineers. All rights reserved.

or any portion thereof, until the cause for such order has been eliminated; however, this right of Owner to stop the Work will not give rise to any duty on the part of Owner to exercise this right for the benefit of Contractor, any Subcontractor, any Supplier, any other individual or entity, or any surety for, or employee or agent of any of them.

14.07 *Owner May Correct Defective Work*

A. If Contractor fails within a reasonable time after written notice from Engineer to correct defective Work, or to remove and replace defective Work as required by Engineer, then Owner may, after 7 days' written notice to Contractor, correct or remedy any such deficiency.

B. In exercising the rights and remedies under this Paragraph 14.07, Owner shall proceed expeditiously. In connection with such corrective or remedial action, Owner may exclude Contractor from all or part of the Site, take possession of all or part of the Work and suspend Contractor's services related thereto, and incorporate in the Work all materials and equipment stored at the Site or for which Owner has paid Contractor but which are stored elsewhere. Contractor shall allow Owner, Owner's representatives, agents and employees, Owner's other contractors, and Engineer and Engineer's consultants access to the Site to enable Owner to exercise the rights and remedies under this paragraph.

C. All claims, costs, losses, and damages incurred or sustained by Owner in exercising the rights and remedies under this Paragraph 14.07 will be charged against Contractor as set-offs against payments due under Article 15. Such claims, costs, losses and damages will include but not be limited to all costs of repair, or replacement of work of others destroyed or damaged by correction, removal, or replacement of Contractor's defective Work.

D. Contractor shall not be allowed an extension of the Contract Times because of any delay in the performance of the Work attributable to the exercise by Owner of Owner's rights and remedies under this Paragraph 14.07.

ARTICLE 15—PAYMENTS TO CONTRACTOR; SET-OFFS; COMPLETION; CORRECTION PERIOD

15.01 *Progress Payments*

A. *Basis for Progress Payments*: The Schedule of Values established as provided in Article 2 will serve as the basis for progress payments and will be incorporated into a form of Application for Payment acceptable to Engineer. Progress payments for Unit Price Work will be based on the number of units completed during the pay period, as determined under the provisions of Paragraph 13.03. Progress payments for cost-based Work will be based on Cost of the Work completed by Contractor during the pay period.

B. *Applications for Payments*

1. At least 20 days before the date established in the Agreement for each progress payment (but not more often than once a month), Contractor shall submit to Engineer for review an Application for Payment filled out and signed by Contractor covering the Work completed as of the date of the Application and accompanied by such supporting documentation as is required by the Contract Documents.

2. If payment is requested on the basis of materials and equipment not incorporated in the Work but delivered and suitably stored at the Site or at another location agreed to in writing, the Application for Payment must also be accompanied by: (a) a bill of sale, invoice, copies of subcontract or purchase order payments, or other documentation

EJCDC® C-700, Standard General Conditions of the Construction Contract.
Copyright© 2018 National Society of Professional Engineers, American Council of Engineering Companies, and American Society of Civil Engineers. All rights reserved.

establishing full payment by Contractor for the materials and equipment; (b) at Owner's request, documentation warranting that Owner has received the materials and equipment free and clear of all Liens; and (c) evidence that the materials and equipment are covered by appropriate property insurance, a warehouse bond, or other arrangements to protect Owner's interest therein, all of which must be satisfactory to Owner.

3. Beginning with the second Application for Payment, each Application must include an affidavit of Contractor stating that all previous progress payments received by Contractor have been applied to discharge Contractor's legitimate obligations associated with prior Applications for Payment.

4. The amount of retainage with respect to progress payments will be as stipulated in the Agreement.

C. *Review of Applications*

1. Engineer will, within 10 days after receipt of each Application for Payment, including each resubmittal, either indicate in writing a recommendation of payment and present the Application to Owner, or return the Application to Contractor indicating in writing Engineer's reasons for refusing to recommend payment. In the latter case, Contractor may make the necessary corrections and resubmit the Application.

2. Engineer's recommendation of any payment requested in an Application for Payment will constitute a representation by Engineer to Owner, based on Engineer's observations of the executed Work as an experienced and qualified design professional, and on Engineer's review of the Application for Payment and the accompanying data and schedules, that to the best of Engineer's knowledge, information and belief:

   a. the Work has progressed to the point indicated;

   b. the quality of the Work is generally in accordance with the Contract Documents (subject to an evaluation of the Work as a functioning whole prior to or upon Substantial Completion, the results of any subsequent tests called for in the Contract Documents, a final determination of quantities and classifications for Unit Price Work under Paragraph 13.03, and any other qualifications stated in the recommendation); and

   c. the conditions precedent to Contractor's being entitled to such payment appear to have been fulfilled in so far as it is Engineer's responsibility to observe the Work.

3. By recommending any such payment Engineer will not thereby be deemed to have represented that:

   a. inspections made to check the quality or the quantity of the Work as it has been performed have been exhaustive, extended to every aspect of the Work in progress, or involved detailed inspections of the Work beyond the responsibilities specifically assigned to Engineer in the Contract; or

   b. there may not be other matters or issues between the parties that might entitle Contractor to be paid additionally by Owner or entitle Owner to withhold payment to Contractor.

EJCDC® C-700, Standard General Conditions of the Construction Contract.
Copyright© 2018 National Society of Professional Engineers, American Council of Engineering Companies, and American Society of Civil Engineers. All rights reserved.

4. Neither Engineer's review of Contractor's Work for the purposes of recommending payments nor Engineer's recommendation of any payment, including final payment, will impose responsibility on Engineer:
    a. to supervise, direct, or control the Work;
    b. for the means, methods, techniques, sequences, or procedures of construction, or the safety precautions and programs incident thereto;
    c. for Contractor's failure to comply with Laws and Regulations applicable to Contractor's performance of the Work;
    d. to make any examination to ascertain how or for what purposes Contractor has used the money paid by Owner; or
    e. to determine that title to any of the Work, materials, or equipment has passed to Owner free and clear of any Liens.
5. Engineer may refuse to recommend the whole or any part of any payment if, in Engineer's opinion, it would be incorrect to make the representations to Owner stated in Paragraph 15.01.C.2.
6. Engineer will recommend reductions in payment (set-offs) necessary in Engineer's opinion to protect Owner from loss because:
    a. the Work is defective, requiring correction or replacement;
    b. the Contract Price has been reduced by Change Orders;
    c. Owner has been required to correct defective Work in accordance with Paragraph 14.07, or has accepted defective Work pursuant to Paragraph 14.04;
    d. Owner has been required to remove or remediate a Hazardous Environmental Condition for which Contractor is responsible; or
    e. Engineer has actual knowledge of the occurrence of any of the events that would constitute a default by Contractor and therefore justify termination for cause under the Contract Documents.

D. *Payment Becomes Due*

1. Ten days after presentation of the Application for Payment to Owner with Engineer's recommendation, the amount recommended (subject to any Owner set-offs) will become due, and when due will be paid by Owner to Contractor.

E. *Reductions in Payment by Owner*

1. In addition to any reductions in payment (set-offs) recommended by Engineer, Owner is entitled to impose a set-off against payment based on any of the following:
    a. Claims have been made against Owner based on Contractor's conduct in the performance or furnishing of the Work, or Owner has incurred costs, losses, or damages resulting from Contractor's conduct in the performance or furnishing of the Work, including but not limited to claims, costs, losses, or damages from workplace injuries, adjacent property damage, non-compliance with Laws and Regulations, and patent infringement;

EJCDC® C-700, Standard General Conditions of the Construction Contract.
Copyright© 2018 National Society of Professional Engineers, American Council of Engineering Companies, and American Society of Civil Engineers. All rights reserved.

b. Contractor has failed to take reasonable and customary measures to avoid damage, delay, disruption, and interference with other work at or adjacent to the Site;

c. Contractor has failed to provide and maintain required bonds or insurance;

d. Owner has been required to remove or remediate a Hazardous Environmental Condition for which Contractor is responsible;

e. Owner has incurred extra charges or engineering costs related to submittal reviews, evaluations of proposed substitutes, tests and inspections, or return visits to manufacturing or assembly facilities;

f. The Work is defective, requiring correction or replacement;

g. Owner has been required to correct defective Work in accordance with Paragraph 14.07, or has accepted defective Work pursuant to Paragraph 14.04;

h. The Contract Price has been reduced by Change Orders;

i. An event has occurred that would constitute a default by Contractor and therefore justify a termination for cause;

j. Liquidated or other damages have accrued as a result of Contractor's failure to achieve Milestones, Substantial Completion, or final completion of the Work;

k. Liens have been filed in connection with the Work, except where Contractor has delivered a specific bond satisfactory to Owner to secure the satisfaction and discharge of such Liens; or

l. Other items entitle Owner to a set-off against the amount recommended.

2. If Owner imposes any set-off against payment, whether based on its own knowledge or on the written recommendations of Engineer, Owner will give Contractor immediate written notice (with a copy to Engineer) stating the reasons for such action and the specific amount of the reduction, and promptly pay Contractor any amount remaining after deduction of the amount so withheld. Owner shall promptly pay Contractor the amount so withheld, or any adjustment thereto agreed to by Owner and Contractor, if Contractor remedies the reasons for such action. The reduction imposed will be binding on Contractor unless it duly submits a Change Proposal contesting the reduction.

3. Upon a subsequent determination that Owner's refusal of payment was not justified, the amount wrongfully withheld will be treated as an amount due as determined by Paragraph 15.01.D.1 and subject to interest as provided in the Agreement.

15.02 *Contractor's Warranty of Title*

A. Contractor warrants and guarantees that title to all Work, materials, and equipment furnished under the Contract will pass to Owner free and clear of (1) all Liens and other title defects, and (2) all patent, licensing, copyright, or royalty obligations, no later than 7 days after the time of payment by Owner.

15.03 *Substantial Completion*

A. When Contractor considers the entire Work ready for its intended use Contractor shall notify Owner and Engineer in writing that the entire Work is substantially complete and request that Engineer issue a certificate of Substantial Completion. Contractor shall at the same time

EJCDC® C-700, Standard General Conditions of the Construction Contract.
Copyright© 2018 National Society of Professional Engineers, American Council of Engineering Companies, and American Society of Civil Engineers. All rights reserved.

submit to Owner and Engineer an initial draft of punch list items to be completed or corrected before final payment.

B. Promptly after Contractor's notification, Owner, Contractor, and Engineer shall make an inspection of the Work to determine the status of completion. If Engineer does not consider the Work substantially complete, Engineer will notify Contractor in writing giving the reasons therefor.

C. If Engineer considers the Work substantially complete, Engineer will deliver to Owner a preliminary certificate of Substantial Completion which will fix the date of Substantial Completion. Engineer shall attach to the certificate a punch list of items to be completed or corrected before final payment. Owner shall have 7 days after receipt of the preliminary certificate during which to make written objection to Engineer as to any provisions of the certificate or attached punch list. If, after considering the objections to the provisions of the preliminary certificate, Engineer concludes that the Work is not substantially complete, Engineer will, within 14 days after submission of the preliminary certificate to Owner, notify Contractor in writing that the Work is not substantially complete, stating the reasons therefor. If Owner does not object to the provisions of the certificate, or if despite consideration of Owner's objections Engineer concludes that the Work is substantially complete, then Engineer will, within said 14 days, execute and deliver to Owner and Contractor a final certificate of Substantial Completion (with a revised punch list of items to be completed or corrected) reflecting such changes from the preliminary certificate as Engineer believes justified after consideration of any objections from Owner.

D. At the time of receipt of the preliminary certificate of Substantial Completion, Owner and Contractor will confer regarding Owner's use or occupancy of the Work following Substantial Completion, review the builder's risk insurance policy with respect to the end of the builder's risk coverage, and confirm the transition to coverage of the Work under a permanent property insurance policy held by Owner. Unless Owner and Contractor agree otherwise in writing, Owner shall bear responsibility for security, operation, protection of the Work, property insurance, maintenance, heat, and utilities upon Owner's use or occupancy of the Work.

E. After Substantial Completion the Contractor shall promptly begin work on the punch list of items to be completed or corrected prior to final payment. In appropriate cases Contractor may submit monthly Applications for Payment for completed punch list items, following the progress payment procedures set forth above.

F. Owner shall have the right to exclude Contractor from the Site after the date of Substantial Completion subject to allowing Contractor reasonable access to remove its property and complete or correct items on the punch list.

15.04 *Partial Use or Occupancy*

A. Prior to Substantial Completion of all the Work, Owner may use or occupy any substantially completed part of the Work which has specifically been identified in the Contract Documents, or which Owner, Engineer, and Contractor agree constitutes a separately functioning and usable part of the Work that can be used by Owner for its intended purpose without

EJCDC® C-700, Standard General Conditions of the Construction Contract.
Copyright© 2018 National Society of Professional Engineers, American Council of Engineering Companies, and American Society of Civil Engineers. All rights reserved.

significant interference with Contractor's performance of the remainder of the Work, subject to the following conditions:

1. At any time, Owner may request in writing that Contractor permit Owner to use or occupy any such part of the Work that Owner believes to be substantially complete. If and when Contractor agrees that such part of the Work is substantially complete, Contractor, Owner, and Engineer will follow the procedures of Paragraph 15.03.A through 15.03.E for that part of the Work.

2. At any time, Contractor may notify Owner and Engineer in writing that Contractor considers any such part of the Work substantially complete and request Engineer to issue a certificate of Substantial Completion for that part of the Work.

3. Within a reasonable time after either such request, Owner, Contractor, and Engineer shall make an inspection of that part of the Work to determine its status of completion. If Engineer does not consider that part of the Work to be substantially complete, Engineer will notify Owner and Contractor in writing giving the reasons therefor. If Engineer considers that part of the Work to be substantially complete, the provisions of Paragraph 15.03 will apply with respect to certification of Substantial Completion of that part of the Work and the division of responsibility in respect thereof and access thereto.

4. No use or occupancy or separate operation of part of the Work may occur prior to compliance with the requirements of Paragraph 6.04 regarding builder's risk or other property insurance.

15.05 *Final Inspection*

A. Upon written notice from Contractor that the entire Work or an agreed portion thereof is complete, Engineer will promptly make a final inspection with Owner and Contractor and will notify Contractor in writing of all particulars in which this inspection reveals that the Work, or agreed portion thereof, is incomplete or defective. Contractor shall immediately take such measures as are necessary to complete such Work or remedy such deficiencies.

15.06 *Final Payment*

A. *Application for Payment*

1. After Contractor has, in the opinion of Engineer, satisfactorily completed all corrections identified during the final inspection and has delivered, in accordance with the Contract Documents, all maintenance and operating instructions, schedules, guarantees, bonds, certificates or other evidence of insurance, certificates of inspection, annotated record documents (as provided in Paragraph 7.12), and other documents, Contractor may make application for final payment.

2. The final Application for Payment must be accompanied (except as previously delivered) by:

   a. all documentation called for in the Contract Documents;

   b. consent of the surety, if any, to final payment;

   c. satisfactory evidence that all title issues have been resolved such that title to all Work, materials, and equipment has passed to Owner free and clear of any Liens or other title defects, or will so pass upon final payment.

EJCDC® C-700, Standard General Conditions of the Construction Contract.
Copyright© 2018 National Society of Professional Engineers, American Council of Engineering Companies, and American Society of Civil Engineers. All rights reserved.

d. a list of all duly pending Change Proposals and Claims; and

e. complete and legally effective releases or waivers (satisfactory to Owner) of all Lien rights arising out of the Work, and of Liens filed in connection with the Work.

3. In lieu of the releases or waivers of Liens specified in Paragraph 15.06.A.2 and as approved by Owner, Contractor may furnish receipts or releases in full and an affidavit of Contractor that: (a) the releases and receipts include all labor, services, material, and equipment for which a Lien could be filed; and (b) all payrolls, material and equipment bills, and other indebtedness connected with the Work for which Owner might in any way be responsible, or which might in any way result in liens or other burdens on Owner's property, have been paid or otherwise satisfied. If any Subcontractor or Supplier fails to furnish such a release or receipt in full, Contractor may furnish a bond or other collateral satisfactory to Owner to indemnify Owner against any Lien, or Owner at its option may issue joint checks payable to Contractor and specified Subcontractors and Suppliers.

B. *Engineer's Review of Final Application and Recommendation of Payment*: If, on the basis of Engineer's observation of the Work during construction and final inspection, and Engineer's review of the final Application for Payment and accompanying documentation as required by the Contract Documents, Engineer is satisfied that the Work has been completed and Contractor's other obligations under the Contract have been fulfilled, Engineer will, within 10 days after receipt of the final Application for Payment, indicate in writing Engineer's recommendation of final payment and present the final Application for Payment to Owner for payment. Such recommendation will account for any set-offs against payment that are necessary in Engineer's opinion to protect Owner from loss for the reasons stated above with respect to progress payments. Otherwise, Engineer will return the Application for Payment to Contractor, indicating in writing the reasons for refusing to recommend final payment, in which case Contractor shall make the necessary corrections and resubmit the Application for Payment.

C. *Notice of Acceptability*: In support of its recommendation of payment of the final Application for Payment, Engineer will also give written notice to Owner and Contractor that the Work is acceptable, subject to stated limitations in the notice and to the provisions of Paragraph 15.07.

D. *Completion of Work*: The Work is complete (subject to surviving obligations) when it is ready for final payment as established by the Engineer's written recommendation of final payment and issuance of notice of the acceptability of the Work.

E. *Final Payment Becomes Due*: Upon receipt from Engineer of the final Application for Payment and accompanying documentation, Owner shall set off against the amount recommended by Engineer for final payment any further sum to which Owner is entitled, including but not limited to set-offs for liquidated damages and set-offs allowed under the provisions of this Contract with respect to progress payments. Owner shall pay the resulting balance due to Contractor within 30 days of Owner's receipt of the final Application for Payment from Engineer.

15.07 *Waiver of Claims*

A. By making final payment, Owner waives its claim or right to liquidated damages or other damages for late completion by Contractor, except as set forth in an outstanding Claim,

EJCDC® C-700, Standard General Conditions of the Construction Contract.
Copyright© 2018 National Society of Professional Engineers, American Council of Engineering Companies, and American Society of Civil Engineers. All rights reserved.

appeal under the provisions of Article 17, set-off, or express reservation of rights by Owner. Owner reserves all other claims or rights after final payment.

B. The acceptance of final payment by Contractor will constitute a waiver by Contractor of all claims and rights against Owner other than those pending matters that have been duly submitted as a Claim, or appealed under the provisions of Article 17.

15.08 *Correction Period*

A. If within one year after the date of Substantial Completion (or such longer period of time as may be prescribed by the Supplementary Conditions or the terms of any applicable special guarantee required by the Contract Documents), Owner gives Contractor written notice that any Work has been found to be defective, or that Contractor's repair of any damages to the Site or adjacent areas has been found to be defective, then after receipt of such notice of defect Contractor shall promptly, without cost to Owner and in accordance with Owner's written instructions:

1. correct the defective repairs to the Site or such adjacent areas;
2. correct such defective Work;
3. remove the defective Work from the Project and replace it with Work that is not defective, if the defective Work has been rejected by Owner, and
4. satisfactorily correct or repair or remove and replace any damage to other Work, to the work of others, or to other land or areas resulting from the corrective measures.

B. Owner shall give any such notice of defect within 60 days of the discovery that such Work or repairs is defective. If such notice is given within such 60 days but after the end of the correction period, the notice will be deemed a notice of defective Work under Paragraph 7.17.B.

C. If, after receipt of a notice of defect within 60 days and within the correction period, Contractor does not promptly comply with the terms of Owner's written instructions, or in an emergency where delay would cause serious risk of loss or damage, Owner may have the defective Work corrected or repaired or may have the rejected Work removed and replaced. Contractor shall pay all costs, losses, and damages (including but not limited to all fees and charges of engineers, architects, attorneys, and other professionals and all court or arbitration or other dispute resolution costs) arising out of or relating to such correction or repair or such removal and replacement (including but not limited to all costs of repair or replacement of work of others). Contractor's failure to pay such costs, losses, and damages within 10 days of invoice from Owner will be deemed the start of an event giving rise to a Claim under Paragraph 12.01.B, such that any related Claim must be brought within 30 days of the failure to pay.

D. In special circumstances where a particular item of equipment is placed in continuous service before Substantial Completion of all the Work, the correction period for that item may start to run from an earlier date if so provided in the Specifications.

E. Where defective Work (and damage to other Work resulting therefrom) has been corrected or removed and replaced under this paragraph, the correction period hereunder with respect to such Work will be extended for an additional period of one year after such correction or removal and replacement has been satisfactorily completed.

EJCDC® C-700, Standard General Conditions of the Construction Contract.
Copyright© 2018 National Society of Professional Engineers, American Council of Engineering Companies, and American Society of Civil Engineers. All rights reserved.

F. Contractor's obligations under this paragraph are in addition to all other obligations and warranties. The provisions of this paragraph are not to be construed as a substitute for, or a waiver of, the provisions of any applicable statute of limitation or repose.

ARTICLE 16—SUSPENSION OF WORK AND TERMINATION

16.01 *Owner May Suspend Work*

A. At any time and without cause, Owner may suspend the Work or any portion thereof for a period of not more than 90 consecutive days by written notice to Contractor and Engineer. Such notice will fix the date on which Work will be resumed. Contractor shall resume the Work on the date so fixed. Contractor shall be entitled to an adjustment in the Contract Price or an extension of the Contract Times directly attributable to any such suspension. Any Change Proposal seeking such adjustments must be submitted no later than 30 days after the date fixed for resumption of Work.

16.02 *Owner May Terminate for Cause*

A. The occurrence of any one or more of the following events will constitute a default by Contractor and justify termination for cause:

1. Contractor's persistent failure to perform the Work in accordance with the Contract Documents (including, but not limited to, failure to supply sufficient skilled workers or suitable materials or equipment, or failure to adhere to the Progress Schedule);

2. Failure of Contractor to perform or otherwise to comply with a material term of the Contract Documents;

3. Contractor's disregard of Laws or Regulations of any public body having jurisdiction; or

4. Contractor's repeated disregard of the authority of Owner or Engineer.

B. If one or more of the events identified in Paragraph 16.02.A occurs, then after giving Contractor (and any surety) 10 days' written notice that Owner is considering a declaration that Contractor is in default and termination of the Contract, Owner may proceed to:

1. declare Contractor to be in default, and give Contractor (and any surety) written notice that the Contract is terminated; and

2. enforce the rights available to Owner under any applicable performance bond.

C. Subject to the terms and operation of any applicable performance bond, if Owner has terminated the Contract for cause, Owner may exclude Contractor from the Site, take possession of the Work, incorporate in the Work all materials and equipment stored at the Site or for which Owner has paid Contractor but which are stored elsewhere, and complete the Work as Owner may deem expedient.

D. Owner may not proceed with termination of the Contract under Paragraph 16.02.B if Contractor within 7 days of receipt of notice of intent to terminate begins to correct its failure to perform and proceeds diligently to cure such failure.

E. If Owner proceeds as provided in Paragraph 16.02.B, Contractor shall not be entitled to receive any further payment until the Work is completed. If the unpaid balance of the Contract Price exceeds the cost to complete the Work, including all related claims, costs, losses, and damages (including but not limited to all fees and charges of engineers, architects,

EJCDC® C-700, Standard General Conditions of the Construction Contract.
Copyright© 2018 National Society of Professional Engineers, American Council of Engineering Companies, and American Society of Civil Engineers. All rights reserved.

attorneys, and other professionals) sustained by Owner, such excess will be paid to Contractor. If the cost to complete the Work including such related claims, costs, losses, and damages exceeds such unpaid balance, Contractor shall pay the difference to Owner. Such claims, costs, losses, and damages incurred by Owner will be reviewed by Engineer as to their reasonableness and, when so approved by Engineer, incorporated in a Change Order. When exercising any rights or remedies under this paragraph, Owner shall not be required to obtain the lowest price for the Work performed.

F. Where Contractor's services have been so terminated by Owner, the termination will not affect any rights or remedies of Owner against Contractor then existing or which may thereafter accrue, or any rights or remedies of Owner against Contractor or any surety under any payment bond or performance bond. Any retention or payment of money due Contractor by Owner will not release Contractor from liability.

G. If and to the extent that Contractor has provided a performance bond under the provisions of Paragraph 6.01.A, the provisions of that bond will govern over any inconsistent provisions of Paragraphs 16.02.B and 16.02.D.

16.03 *Owner May Terminate for Convenience*

A. Upon 7 days' written notice to Contractor and Engineer, Owner may, without cause and without prejudice to any other right or remedy of Owner, terminate the Contract. In such case, Contractor shall be paid for (without duplication of any items):

1. completed and acceptable Work executed in accordance with the Contract Documents prior to the effective date of termination, including fair and reasonable sums for overhead and profit on such Work;

2. expenses sustained prior to the effective date of termination in performing services and furnishing labor, materials, or equipment as required by the Contract Documents in connection with uncompleted Work, plus fair and reasonable sums for overhead and profit on such expenses; and

3. other reasonable expenses directly attributable to termination, including costs incurred to prepare a termination for convenience cost proposal.

B. Contractor shall not be paid for any loss of anticipated profits or revenue, post-termination overhead costs, or other economic loss arising out of or resulting from such termination.

16.04 *Contractor May Stop Work or Terminate*

A. If, through no act or fault of Contractor, (1) the Work is suspended for more than 90 consecutive days by Owner or under an order of court or other public authority, or (2) Engineer fails to act on any Application for Payment within 30 days after it is submitted, or (3) Owner fails for 30 days to pay Contractor any sum finally determined to be due, then Contractor may, upon 7 days' written notice to Owner and Engineer, and provided Owner or Engineer do not remedy such suspension or failure within that time, terminate the contract and recover from Owner payment on the same terms as provided in Paragraph 16.03.

B. In lieu of terminating the Contract and without prejudice to any other right or remedy, if Engineer has failed to act on an Application for Payment within 30 days after it is submitted, or Owner has failed for 30 days to pay Contractor any sum finally determined to be due, Contractor may, 7 days after written notice to Owner and Engineer, stop the Work until payment is made of all such amounts due Contractor, including interest thereon. The

Copyright© 2018 National Society of Professional Engineers, American Council of Engineering Companies, and American Society of Civil Engineers. All rights reserved.

provisions of this paragraph are not intended to preclude Contractor from submitting a Change Proposal for an adjustment in Contract Price or Contract Times or otherwise for expenses or damage directly attributable to Contractor's stopping the Work as permitted by this paragraph.

ARTICLE 17—FINAL RESOLUTION OF DISPUTES

17.01 *Methods and Procedures*

A. *Disputes Subject to Final Resolution*: The following disputed matters are subject to final resolution under the provisions of this article:

1. A timely appeal of an approval in part and denial in part of a Claim, or of a denial in full, pursuant to Article 12; and

2. Disputes between Owner and Contractor concerning the Work, or obligations under the Contract Documents, that arise after final payment has been made.

B. *Final Resolution of Disputes*: For any dispute subject to resolution under this article, Owner or Contractor may:

1. elect in writing to invoke the dispute resolution process provided for in the Supplementary Conditions;

2. agree with the other party to submit the dispute to another dispute resolution process; or

3. if no dispute resolution process is provided for in the Supplementary Conditions or mutually agreed to, give written notice to the other party of the intent to submit the dispute to a court of competent jurisdiction.

ARTICLE 18—MISCELLANEOUS

18.01 *Giving Notice*

A. Whenever any provision of the Contract requires the giving of written notice to Owner, Engineer, or Contractor, it will be deemed to have been validly given only if delivered:

1. in person, by a commercial courier service or otherwise, to the recipient's place of business;

2. by registered or certified mail, postage prepaid, to the recipient's place of business; or

3. by e-mail to the recipient, with the words "Formal Notice" or similar in the e-mail's subject line.

18.02 *Computation of Times*

A. When any period of time is referred to in the Contract by days, it will be computed to exclude the first and include the last day of such period. If the last day of any such period falls on a Saturday or Sunday or on a day made a legal holiday by the law of the applicable jurisdiction, such day will be omitted from the computation.

EJCDC® C-700, Standard General Conditions of the Construction Contract.
Copyright© 2018 National Society of Professional Engineers, American Council of Engineering Companies, and American Society of Civil Engineers. All rights reserved.

18.03 *Cumulative Remedies*

A. The duties and obligations imposed by these General Conditions and the rights and remedies available hereunder to the parties hereto are in addition to, and are not to be construed in any way as a limitation of, any rights and remedies available to any or all of them which are otherwise imposed or available by Laws or Regulations, by special warranty or guarantee, or by other provisions of the Contract. The provisions of this paragraph will be as effective as if repeated specifically in the Contract Documents in connection with each particular duty, obligation, right, and remedy to which they apply.

18.04 *Limitation of Damages*

A. With respect to any and all Change Proposals, Claims, disputes subject to final resolution, and other matters at issue, neither Owner nor Engineer, nor any of their officers, directors, members, partners, employees, agents, consultants, or subcontractors, shall be liable to Contractor for any claims, costs, losses, or damages sustained by Contractor on or in connection with any other project or anticipated project.

18.05 *No Waiver*

A. A party's non-enforcement of any provision will not constitute a waiver of that provision, nor will it affect the enforceability of that provision or of the remainder of this Contract.

18.06 *Survival of Obligations*

A. All representations, indemnifications, warranties, and guarantees made in, required by, or given in accordance with the Contract, as well as all continuing obligations indicated in the Contract, will survive final payment, completion, and acceptance of the Work or termination of the Contract or of the services of Contractor.

18.07 *Controlling Law*

A. This Contract is to be governed by the law of the state in which the Project is located.

18.08 *Assignment of Contract*

A. Unless expressly agreed to elsewhere in the Contract, no assignment by a party to this Contract of any rights under or interests in the Contract will be binding on the other party without the written consent of the party sought to be bound; and, specifically but without limitation, money that may become due and money that is due may not be assigned without such consent (except to the extent that the effect of this restriction may be limited by law), and unless specifically stated to the contrary in any written consent to an assignment, no assignment will release or discharge the assignor from any duty or responsibility under the Contract.

18.09 *Successors and Assigns*

A. Owner and Contractor each binds itself, its successors, assigns, and legal representatives to the other party hereto, its successors, assigns, and legal representatives in respect to all covenants, agreements, and obligations contained in the Contract Documents.

18.10 *Headings*

A. Article and paragraph headings are inserted for convenience only and do not constitute parts of these General Conditions.

EJCDC® C-700, Standard General Conditions of the Construction Contract.
Copyright© 2018 National Society of Professional Engineers, American Council of Engineering Companies, and American Society of Civil Engineers. All rights reserved.

SUPPLEMENTARY CONDITIONS OF THE CONSTRUCTION CONTRACT

TABLE OF CONTENTS

Page

Article 1— Definitions and Terminology 1
Article 2— Preliminary Matters 2
Article 3— Contract Documents: Intent, Requirements, Reuse 3
Article 4— Commencement and Progress of the Work 4
Article 5— Site, Subsurface and Physical Conditions, Hazardous Environmental Conditions 5
Article 6— Bonds and Insurance 6
Article 7— Contractor's Responsibilities 11
Article 8— Other Work at the Site 15
Article 9— Owner's Responsibilities 15
Article 10— Engineer's Status During Construction 15
Article 11— Changes to the Contract 17
Article 12— Claims 17
Article 13— Cost of Work; Allowances, Unit Price Work 17
Article 14— Tests and Inspections; Correction, Removal, or Accceptance of Defective Work 17
Article 15— Payments to Contractor; Set Offs; Completions; Correction Period 17
Article 16— Suspension of Work and Termination 20
Article 17— Final Resolution Of Disputes 21
Article 18— Miscellaneous 21

EJCDC® C-800, Supplementary Conditions of the Construction Contract.
Copyright© 2018 National Society of Professional Engineers, American Council of Engineering Companies, and American Society of Civil Engineers. All rights reserved.

SUPPLEMENTARY CONDITIONS OF THE CONSTRUCTION CONTRACT

These Supplementary Conditions amend or supplement EJCDC® C-700, Standard General Conditions of the Construction Contract (2018). The General Conditions remain in full force and effect except as amended.

The terms used in these Supplementary Conditions have the meanings stated in the General Conditions. Additional terms used in these Supplementary Conditions have the meanings stated below, which are applicable to both the singular and plural thereof.

The address system used in these Supplementary Conditions is the same as the address system used in the General Conditions, with the prefix "SC" added—for example, “Paragraph SC-4.05.”

ARTICLE 1—DEFINITIONS AND TERMINOLOGY

1.01 *Defined Terms*

SC-1.01 Modify 1.01 A. 20 and add the following:

For this Agreement the Engineer is Wall Engineering, LLC, 223 N. Washington Ave., Durant, OK 74701

SC-1.01A Add the following subparagraphs immediately after subparagraph 1.01.A.50

51. Award – The formal acceptance of the Bid by Owner.
52. Bid Guarantee (Bid Bond) – The security furnished with a Bid to guarantee that the Bidder will enter into the contract if Bidder’s Bid is accepted by Owner.
53. Design Engineer – Wall Engineering, LLC
54. Equipment (Construction) – All machinery and equipment, together with the necessary supplies for upkeep and maintenance, including tools and apparatus necessary for the proper construction and acceptable completion of the Work contemplated. (Installation) – All material or articles used in equipping a facility or apparatus required to fulfill a functional design.
55. Execution – Field or site performance, workmanship, installation, erection, application, field fabrication, quality control, and protection of installed products on the site.
56. Materials – All materials incorporated into the Project, including equipment and all other materials consumed or to be consumed in the performance of the Work contemplated.
57. Product Data – Type of Shop Drawing comprised of standard illustrations, schedules, performance charts, instructions, brochures, diagrams, catalog cuts, and other information assembled by or for the Contractor and submitted by the Contractor to illustrate materials or equipment for some portion of the Work.
58. Products – Materials, equipment, systems, shop fabrications, mixtures, and source controls.

EJCDC® C-800, Supplementary Conditions of the Construction Contract.
Copyright© 2018 National Society of Professional Engineers, American Council of Engineering Companies, and American Society of Civil Engineers. All rights reserved.

59. Utility – Any public or private fixed works for the transportation of fluids, gases, electricity, signals, or communications.

1.02 ***Terminology***

SC-1.02 Add a new paragraph B.1 as follows:

1. "At no additional cost to Owner", "With no extra compensation to Contractor", "At Contractor's own expense", or similar words mean that the Contractor will perform or provide specified operation of work without any increase in the Contract Amount. It is understood that the cost for performing all work is included in the amount bid and will be performed at no additional cost to the Owner unless specifically stated otherwise.

SC-1.02 Add a new paragraph "E.5 and E.6" as follows:

5. Specifications are written in modified brief style. Requirements apply to all work of the same kind, class, and type even though the word "all" is not stated.

6. Simple imperative sentence structure is used which places a verb as the first word in the sentence. It is understood that the words "furnish", "install", "provide", or similar words include the meaning of the phrase "The Contractor shall..." before these words.

ARTICLE 2—PRELIMINARY MATTERS

2.02 ***Copies of Documents***

SC-2.02 Amend the first sentence of Paragraph 2.02.A. to read as follows:

Owner shall furnish to Contractor two (2) printed copies of the Contract Documents (including one fully signed counterpart of the Agreement), and one (1) in electronic portable document format (PDF).

2.03 ***Before Starting Construction***

SC-2.03 Add a new paragraph immediately after paragraph 2.03.A.3:

B. Before undertaking each part of the Work, Contractor shall carefully study and compare the Contract Documents and check and verify pertinent figures shown thereon and all applicable field measurements. Contractor shall promptly report in writing to the Engineer any conflict, error, ambiguity or discrepancy which the Contractor may discover and shall obtain a written interpretation from the Engineer before proceeding with any work affected thereby. In the event of a conflict in the Drawings, Specifications, or other portions of the Contract Document which were not reported prior to the Award of the Contract, the Contractor shall be deemed to have included the most expensive item in their bid.

2.04 ***Preconstruction Conference; Designation of Authorized Representatives***

SC-2.04.A Delete paragraph 2.04.A and insert the following in lieu thereof:

A. Before the Contract Times start to run, but after Notice to Proceed is given, a conference attended by Contractor, Engineer, and others as appropriate will be held to establish a working understanding among the parties as to the Work and to discuss the schedules

Copyright© 2018 National Society of Professional Engineers, American Council of Engineering Companies, and American Society of Civil Engineers. All rights reserved.

referred to in paragraph 2.03.A, procedures for handling Shop Drawings and other submittals, processing Applications for Payment, electronic or digital transmittals, and maintaining required records.

ARTICLE 3—CONTRACT DOCUMENTS: INTENT, REQUIREMENTS, REUSE

3.01 Intent

SC 3.01 Add the following to 3.01 A

Drawings and specifications do not indicate or describe all of the work required to complete the project. Additional details required for the correct installation of selected products are to be provided by the Contractor and coordinated with the Engineer. Provide any work, materials or equipment required for a complete and functional system even if they are not detailed or specified

1. The contract requirements described in the General Conditions, Supplementary Conditions and General Requirements apply to each and all specification sections unless specifically noted otherwise.
2. Organization of Contract Documents is not intended to control or to lessen the responsibility of the Contractor when dividing work among Subcontractors, or to establish the extent of work to be performed by any trade, Subcontractor or Supplier. Specifications or details do not need to be indicated or specified in each specification or drawing. Items shown in the contract documents are applicable regardless of location in the Contract Documents.
3. Standard paragraph titles and other identifications of subject matter in the specifications are intended to aid in locating and recognizing various requirements of the specifications. Titles do not define, limit, or otherwise restrict specification text.

SC 3.01 Add new paragraphs “F - G” as follows:

F. Comply with the most stringent requirements where compliance with two (2) or more standards is specified, and they establish different or conflicting requirements for minimum quantities or quality levels, unless Contract Documents indicate otherwise. Commencement and Progress of the Work
    1. Quantity or quality level shown or indicated shall be minimum to be provided or performed in every instance.
    2. Actual installation may comply exactly with minimum quality indicated, or it may exceed that minimum within reasonable limits.
    3. In complying with these requirements, indicated numeric values are minimum or maximum values, as noted, or appropriate for context of requirements.
    4. Refer instances of uncertainty to the Engineer for a decision before proceeding.

G. Provide materials and equipment comparable in quality to similar materials and equipment incorporated in the project or as required to meet the minimum requirements

EJCDC® C-800, Supplementary Conditions of the Construction Contract.
Copyright© 2018 National Society of Professional Engineers, American Council of Engineering Companies, and American Society of Civil Engineers. All rights reserved.

of the application if the materials and equipment are shown in the drawings but are not included in the specifications.

3.02 ***Reference Standards***

SC 3.02 Add a new paragraph "B" as follows:

B. Comply with applicable construction industry standards as if bound or copied directly into the Contract Documents regardless of lack of reference in the Contract Documents. Apply provisions of the Contract Documents where Contract Documents include more stringent requirements than the referenced standards.

1. Standards referenced directly in the Contract Documents take precedence over standards that are not referenced but recognized in the construction industry as applicable.

2. Comply with standards not referenced but recognized in the construction industry as applicable for performance of the work except as otherwise limited by the Contract Documents. The Engineer determines whether code or standard is applicable, or which of several are applicable.

3. Make copies of reference standards available as requested by Engineer or Owner.

3.03 Reporting and Resolving Discrepancies

SC 3.03 Add the following new Subparagraph immediately after Subparagraph 3.03.A.3:

3. In the event of a conflict in the Drawings, Specifications, or other portions of the Contract Documents which were not reported prior to the Bidding of the Contract, the Contractor shall be deemed to have included the most expensive item, system, procedure, etc. in his Bid.

ARTICLE 4— COMMENCEMENT AND PROGRESS OF THE WORK

4.05 ***Delays in Contractor's Progress***

SC-4.05 Amend Paragraph 4.05.C by adding the following subparagraphs:

5. *Weather-Related Delays*

a. If "abnormal weather conditions" as set forth in Paragraph 4.05.C.2 of the General Conditions are the basis for a request for an equitable adjustment in the Contract Times, such request must be documented by data substantiating each of the following: 1) that weather conditions were abnormal for the period of time in which the delay occurred, 2) that such weather conditions could not have been reasonably anticipated, and 3) that such weather conditions had an adverse effect on the Work as scheduled.

b. The existence of abnormal weather conditions will be determined on a month-by-month basis in accordance with the following:

1) Every workday on which one or more of the following conditions exist will be considered a "bad weather day":

EJCDC® C-800, Supplementary Conditions of the Construction Contract.
Copyright© 2018 National Society of Professional Engineers, American Council of Engineering Companies, and American Society of Civil Engineers. All rights reserved.

i) Total precipitation (as rain equivalent) occurring between 7:00 p.m. on the preceding day (regardless of whether such preceding day is a workday) through 7:00 p.m. on the workday in question equals or exceeds ½" of precipitation (as rain equivalent), based on the snow/rain conversion. (1" of rain = 2" of sleet / 5" inches of snow)

ii) Ambient outdoor air temperature at 11:00 a.m. is equal to or less than the following low temperature threshold: 32 degrees Fahrenheit

2) Determination of actual bad weather days during performance of the Work will be based on the weather records measured and recorded by the nearest Mesonet weather monitoring station (see www.mesonet.org.)

3) Contractor shall anticipate the number of foreseeable bad weather days per month as follows:

TABLE A - NORMAL ADVERSE WEATHER DAYS (BY MONTH)	
January	11
February	10
March	6
April	7
May	7
June	4
July	4
August	2
September	3
October	4
November	5
December	7

4) In each month, every bad weather day exceeding the number of foreseeable bad weather days established in the table above will be considered as "abnormal weather conditions." The existence of abnormal weather conditions will not relieve Contractor of the obligation to demonstrate and document that delays caused by abnormal weather are specific to the planned work activities or that such activities thus delayed were on Contractor's then-current Progress Schedule's critical path for the Project.

ARTICLE 5—SITE, SUBSURFACE AND PHYSICAL CONDITIONS, HAZARDOUS ENVIRONMENTAL CONDITIONS

5.03 *Subsurface and Physical Conditions*

SC 5.03 Delete Paragraphs 5.06.A and 5.06.B in their entirety and insert the following:

A. No additional reports or drawings related are available beyond those included in the Contract Documents.

EJCDC® C-800, Supplementary Conditions of the Construction Contract.
Copyright© 2018 National Society of Professional Engineers, American Council of Engineering Companies, and American Society of Civil Engineers. All rights reserved.

SC-5.05A Add the following subparagraphs to paragraph 5.05.A:

6. Generally, service connections are not indicated on the Drawings. Contractor shall be responsible for discovery of existing underground installations, in advance of excavating or trenching, by contacting all local utilities and by prospecting through hydro-excavation or potholing.

7. All information relative to Underground Facilities shall be recorded and incorporated into the record documents required by paragraph 7.11.

8. Contractor will be held responsible for any unauthorized interruption in the operation of Underground Facilities as a result of Contractor's operations. Unless the owner of the damaged facility elects to perform the repair and restoration work, Contractor shall repair and fully restore any damaged Underground Facility to a condition at least equal to that which existed just prior to the time of damage. All repair and restoration work shall be done to the satisfaction of the facility owner and Engineer.

9. Contractor shall arrange for any inspection of repaired or reconditioned Utility facilities required by authorities having jurisdiction. All inspection fees shall be paid by Contractor. If the facility owner elects to perform the repair and restoration work, Contractor shall render all assistance required. Contractor shall be responsible for all just and reasonable expenses incurred by the facility owners for such work.

5.06 ***Hazardous Environmental Conditions***

SC 5.06 Delete Paragraphs 5.06.A and 5.06.B in their entirety and insert the following:

A. No reports or drawings related to Hazardous Environmental Conditions at the Site are known to Owner.

B. Not Used.

ARTICLE 6—AND INSURANCE

6.01 ***Performance, Payment, and Other Bonds***

SC-6.01 Add the following paragraphs immediately after Paragraph 6.01.A:

1. *Required Performance Bond Form:* The performance bond that Contractor furnishes will be in the form of EJCDC® C-610, Performance Bond (2010, 2013, or 2018 edition).

2. *Required Payment Bond Form:* The payment bond that Contractor furnishes will be in the form of EJCDC® C-615, Payment Bond (2010, 2013, or 2018 edition).

SC-6.01 Add the following paragraphs immediately after Paragraph 6.01.B:

2. After Substantial Completion, Contractor shall furnish a warranty bond issued in the form of EJCDC® C-612, Warranty Bond (2018). The warranty bond must be in a bond amount of 100% percent of the final Contract Price. The warranty bond period will extend to a date 1 year after Substantial Completion of the Work. Contractor shall deliver the fully executed warranty bond to Owner prior to or with the final application for payment.

Copyright© 2018 National Society of Professional Engineers, American Council of Engineering Companies, and American Society of Civil Engineers. All rights reserved.

3. The warranty bond must be issued by the same surety that issues the performance bond required under Paragraph 6.01.A of the General Conditions.

6.02 ***Insurance—General Provisions***

SC-6.02 Add the following paragraph immediately after Paragraph 6.02.B:

1. Contractor may obtain worker's compensation insurance from an insurance company that has not been rated by A.M. Best, provided that such company (a) is domiciled in the state in which the Project is located, (b) is certified or authorized as a worker's compensation insurance provider by the appropriate state agency, and (c) has been accepted to provide worker's compensation insurance for similar projects by the state within the last 12 months.

6.03 ***Contractor's Insurance***

SC-6.03 Supplement Paragraph 6.03 with the following provisions after Paragraph 6.03.C:

E. *Workers' Compensation and Employer's Liability:* Contractor shall purchase and maintain workers' compensation and employer's liability insurance, including, as applicable, United States Longshoreman and Harbor Workers' Compensation Act, Jones Act, stop-gap employer's liability coverage for monopolistic states, and foreign voluntary workers' compensation (from available sources, notwithstanding the jurisdictional requirement of Paragraph 6.02.B of the General Conditions).

Workers' Compensation and Related Policies	Policy limits of not less than:
Workers' Compensation	
State	Statutory
Applicable Federal (e.g., Longshoreman's)	Statutory
Foreign voluntary workers' compensation (employer's responsibility coverage), if applicable	Statutory
Employer's Liability	
Each accident	$500,000
Each employee	$500,000
Policy limit	$500,000

~~F. *Commercial General Liability—Claims Covered:* Contractor shall purchase and maintain commercial general liability insurance, covering all operations by or on behalf of Contractor, on an occurrence basis, against claims for:~~

~~1. damages because of bodily injury, sickness or disease, or death of any person other than Contractor's employees,~~

~~2. damages insured by reasonably available personal injury liability coverage, and~~

~~3. damages because of injury to or destruction of tangible property wherever located, including loss of use resulting therefrom.~~

G. *Commercial General Liability—Form and Content:* Contractor's commercial liability policy must be written on a 1996 (or later) Insurance Services Organization, Inc. (ISO) commercial

Copyright© 2018 National Society of Professional Engineers, American Council of Engineering Companies, and American Society of Civil Engineers. All rights reserved.

general liability form (occurrence form) and include the following coverages and endorsements:

1. Products and completed operations coverage.
    a. Such insurance must be maintained for three years after final payment.
    b. Contractor shall furnish Owner and each other additional insured (as identified in the Supplementary Conditions or elsewhere in the Contract) evidence of continuation of such insurance at final payment and three years thereafter.
2. Blanket contractual liability coverage, including but not limited to coverage of Contractor's contractual indemnity obligations in Paragraph 7.18.
3. Severability of interests and no insured-versus-insured or cross-liability exclusions.
4. Underground, explosion, and collapse coverage.
5. Personal injury coverage.
6. Additional insured endorsements that include both ongoing operations and products and completed operations coverage through ISO Endorsements CG 20 10 10 01 and CG 20 37 10 01 (together). If Contractor demonstrates to Owner that the specified ISO endorsements are not commercially available, then Contractor may satisfy this requirement by providing equivalent endorsements.
7. For design professional additional insureds, ISO Endorsement CG 20 32 07 04 "Additional Insured—Engineers, Architects or Surveyors Not Engaged by the Named Insured" or its equivalent.

~~H. *Commercial General Liability—Excluded Content:* The commercial general liability insurance policy, including its coverages, endorsements, and incorporated provisions, must not include any of the following:~~

~~1. Any modification of the standard definition of "insured contract" (except to delete the railroad protective liability exclusion if Contractor is required to indemnify a railroad or others with respect to Work within 50 feet of railroad property).~~

~~2. Any exclusion for water intrusion or water damage.~~

~~3. Any provisions resulting in the erosion of insurance limits by defense costs other than those already incorporated in ISO form CG 00 01.~~

~~4. Any exclusion of coverage relating to earth subsidence or movement.~~

~~5. Any exclusion for the insured's vicarious liability, strict liability, or statutory liability (other than worker's compensation).~~

~~6. Any limitation or exclusion based on the nature of Contractor's work.~~

~~7. Any professional liability exclusion broader in effect than the most recent edition of ISO form CG 22 79.~~

Copyright© 2018 National Society of Professional Engineers, American Council of Engineering Companies, and American Society of Civil Engineers. All rights reserved.

I. *Commercial General Liability—Minimum Policy Limits*

Commercial General Liability	Policy limits of not less than:
General Aggregate	$1,000,000/occur $2,000,000 agg
Products—Completed Operations Aggregate	$1,000,000/occur $2,000,000 agg
Personal and Advertising Injury	$1,000,000
Bodily Injury and Property Damage—Each Occurrence	$1,000,000

J. *Automobile Liability:* Contractor shall purchase and maintain automobile liability insurance for damages because of bodily injury or death of any person or property damage arising out of the ownership, maintenance, or use of any motor vehicle. The automobile liability policy must be written on an occurrence basis.

Automobile Liability	Policy limits of not less than:
Bodily Injury	
Each Person	$1,000,000
Each Accident	$2,000,000
Property Damage	
Each Accident	$1,000,000
[or]	
Combined Single Limit	
Combined Single Limit (Bodily Injury and Property Damage)	$5,000,000

K. *Umbrella or Excess Liability:* Contractor shall purchase and maintain umbrella or excess liability insurance written over the underlying employer's liability, commercial general liability, and automobile liability insurance described in the Paragraphs above. The coverage afforded must be at least as broad as that of each and every one of the underlying policies.

Excess or Umbrella Liability	Policy limits of not less than:
Each Occurrence	$2,000,000
General Aggregate	$2,000,000

~~L. *Using Umbrella or Excess Liability Insurance to Meet CGL and Other Policy Limit Requirements:* Contractor may meet the policy limits specified for employer's liability, commercial general liability, and automobile liability through the primary policies alone, or through combinations of the primary insurance policy's policy limits and partial attribution of the policy limits of an umbrella or excess liability policy that is at least as broad in coverage as that of the underlying policy, as specified herein. If such umbrella or excess liability policy was required under this Contract, at a specified minimum policy limit, such umbrella or excess policy must retain a minimum limit of $**[specify amount]** after accounting for partial attribution of its limits to underlying policies, as allowed above.~~

Copyright© 2018 National Society of Professional Engineers, American Council of Engineering Companies, and American Society of Civil Engineers. All rights reserved.

M. *Contractor's Pollution Liability Insurance:* Contractor shall purchase and maintain a policy covering third-party injury and property damage, including cleanup costs, as a result of pollution conditions arising from Contractor's operations and completed operations. This insurance must be maintained for no less than three years after final completion.

Contractor's Pollution Liability	Policy limits of not less than:
Each Occurrence/Claim	$1,000,000
General Aggregate	$1,000,000

~~N.~~ Q. *Other Required Insurance:* Contractor shall purchase and maintain for Owner, at no additional cost, Owner's Protective Liability insurance naming Owner as the named insured with insurance that will protect said parties against claims which may arise from operations under the Contract Documents. This coverage shall be from the same company that provides Contractor's liability insurance coverage, and in the same minimum amounts. The Engineer and Engineer's consultants are additional insured as their interest may appear including their officers, directors, agents and employees.

SC-6.05 *Property Insurance*

SC-6.05 Add the following to the list of requirements in Paragraph 6.05.A, as a numbered item:

13. be subject to a deductible amount of no more than $5,000.00 for direct physical loss in any one occurrence.

SC-6.05.A.1 Add the following new subparagraph after subparagraph 6.05.A.1:

a. In addition to Owner, Contractor, and all Subcontractors, include as insureds the following:

1. Wall Engineering, LLC, 223 N Washington Ave, Durant, OK 74702

SC-6.05.A. Add the following to the list of items in Paragraph 6.05.A, as numbered items:

14. include for the benefit of Owner loss of profits and soft cost coverage including, without limitation, fixed expenses and debt service for a minimum of 12 months

SC-6.06 Add a new paragraph "6.07" as follows:

SC-6.07 Owner's Insurance for Project

A. Owner shall not be responsible for purchasing and maintaining any insurance to protect the interest of the Contractor, Subcontractors, or others in the Work. The stated limits of insurance required are minimum only. Contractor shall determine the limits that are adequate. These limits may be basic policy limits or any combination of basic limits and umbrella limits. In any event, Contractor is fully responsible for all losses arising out of, resulting from or connected with operations under this contract whether or not said losses are covered by insurance. The acceptance of certificates or other evidence of insurance by the Owner, Engineer, and/or others listed as additional insured in Paragraph 5.04 B.1 that in

Copyright© 2018 National Society of Professional Engineers, American Council of Engineering Companies, and American Society of Civil Engineers. All rights reserved.

any respect do not comply with the Contract requirements does not release the Contractor from compliance herewith.

ARTICLE 7—CONTRACTOR'S RESPONSIBILITIES

SC-7.01 Supervision and Superintendent

SC-7.01.B. Delete Paragraph 7.01 B. in its entirety, and insert the following:

B. Contractor's resident superintendent shall have a minimum of 7-years of superintendent experience on similar size and complexity projects. Contractor shall provide documentation to Engineer at least 14-days prior to beginning work on the site demonstrating that the superintendent meets all qualification requirements. Contractor's superintendent shall speak fluid English. Failure to meet the qualification requirements entitles the Engineer to require the Contractor replace the superintendent. Engineer/Owner shall review the superintendent's qualifications and accept the superintendent to perform their duties on the project. Superintendent shall be on site at all times when work is being performed on the Project by Contractor's work force or any of their subcontractors. Failure of the superintendent to be present will result in an automatic work-stoppage on the site until which time superintendent is present. The mandatory work-stoppage shall not entitle the Contractor to any additional compensation. Contractor's failure to properly address and resolve any superintendent issues due to qualifications, job site absenteeism, language barriers, etc., shall result in Owner holding payment to contractor until contractor properly resolves the issue(s).

7.03 Labor; Working Hours

SC-7.03 Delete paragraph 7.02 B. and insert the following in its place:

Except as otherwise required for the safety or protection of persons or the Work or property at the Site or adjacent thereto, and except as otherwise stated in the Contract Documents, no Work shall be performed at the Site between 6:00 p.m. and 7:00 a.m. Contractor will not permit the performance of Work on a Saturday, Sunday, or any District holiday without Owner's written consent. Should Contractor desire to work on these days, he shall contact the Owner, in writing, for approval at least 48 hours in advance.

Emergency work may be done without prior permission. Tie-ins and connections to existing facilities will be made at time authorized by the Owner

7.04 Services, Materials, and Equipment

SC-7.04 *Add the following paragraphs immediately after paragraph 7.04.C:*

D. Interfaces to Equipment, Instruments, and Other Components:

1. The drawings, specifications, and overall design are based on preliminary information furnished by various equipment manufacturers which identify a minimum scope of supply from the manufacturers. This information pertains to, but is not limited to, instruments, control devices, electrical equipment, packaged mechanical systems, and control equipment provided with mechanical systems.

2. Provide all material and labor needed to install the actual equipment furnished, and include all costs to add any additional conduit, wiring, terminals, or other electrical

Copyright© 2018 National Society of Professional Engineers, American Council of Engineering Companies, and American Society of Civil Engineers. All rights reserved.

hardwired to the work, which may be necessary to make a complete, functional installation based on the actual equipment furnished:

a. Make all changes necessary to meet the manufacturer's wiring requirements.

3. Submit all such changes and additions to the Engineer for acceptance in accordance with the General Conditions.

4. Review the complete set of drawings and specifications in order to ensure that all items related to the electrical power and control systems are completely accounted for. Include any such items that appear on drawings or in specifications from another specification of Work.

E. Until Substantial Completion of the Work is acknowledged by Owner, Contractor shall have the responsible charge and care of the Work and of materials to be used herein, including materials for which Contractor has received partial payment or materials which have been furnished by Owner, and shall bear the risk of injury, loss, or damage to any part thereof by the action of the elements or from any other cause, whether arising from the execution or from the nonexecution of the Work.

F. Contractor shall rebuild, repair, restore, and make good all injuries, losses, or damages to any portion of the Work or the materials occasioned by any cause before the Work's completion and acceptance and shall bear the expense thereof. Where necessary to protect the Work or materials from damage, Contractor shall, at Contractor's own expense, provide suitable drainage and erect such temporary structures or rent such structures as are necessary to protect the Work or materials from damage. The suspension of the Work or the granting of an extension of time from any cause whatever shall not relieve Contractor or Contractor's responsibility for the Work and materials as specified herein.

G. When the quality of a material, process, or article is not specifically set forth in the Contract Documents, the best available quality of the material, process, or article shall be provided.

H. Delivery and Inspection:

1. Deliver products in undamaged condition, in manufacturer's original container or packaging with identifying labels intact and legible. Include date of manufacture on label.

7.05 "Or Equals"

SC-7.05.A Delete paragraph 7.05.A and insert the following in lieu thereof:

A. Whenever an item of material or equipment is specified or described in the Contract Documents by using the name of a proprietary item or the name of a particular Supplier, the Contract Price has been based upon Contractor furnishing such item as specified. The specification or description of such an item is intended to establish the type, function, appearance, and quality required. If the specification or description contains the words, "or equal" or "or equal allowed", or "or equal item is permitted", Contractor may request that Engineer authorize the use of other items of material or equipment, or items from other proposed suppliers under the circumstances described below. Unless these words are specifically written in the description of such item, no substitution is allowed per this Contract. If the item's description is followed by words reading that "no like", "no

Copyright© 2018 National Society of Professional Engineers, American Council of Engineering Companies, and American Society of Civil Engineers. All rights reserved.

equivalent", or "no or equal" item is permitted, then no substitution of like items or like manufacturers is allowed as part of this Contract.

1. If Engineer in its sole discretion determines that an item of material or equipment proposed by Contractor is functionally equal to that named and sufficiently similar so that no change in related Work will be required, Engineer shall deem it an "or equal" item. For the purposes of this paragraph, a proposed item of material or equipment will be considered functionally equal to an item so named if:
    a. in the exercise of reasonable judgment Engineer determines that:
        1) It is at least equal in materials of construction, quality, durability, appearance, strength, and design characteristics;
        2) it will reliably perform at least equally well the function and achieve the results imposed by the design concept of the completed Project as a functioning whole;
        3) it has a proven record of performance and availability of responsive service; and
        4) it is not objectionable to Owner.
    b. Contractor certifies that, if approved and incorporated into the Work:
        1) there will be no increase in cost to the Owner or increase in Contract Times; and
        2) it will conform substantially to the detailed requirements of the item named in the Contract Documents.

7.06 Substitutes

SC-7.06.A Delete paragraph 7.06.A and insert the following in lieu thereof:

A. Unless the specification or description of an item of material or equipment required to be furnished under the Contract Documents contains or is followed by words reading that, "or equal" or "or equal allowed", or "or equal item is permitted", then no substitution of like items is permitted. If the item's description includes the words "no substitution is permitted", "no like", "no equivalent", or "no or equal" item is permitted, then no substitution of like items or like manufacturers is allowed as part of this Contract. If the words, "or equal is permitted, "or equal", or "like items are permitted", Contractor may request that Engineer authorize the use of other items of material or equipment under the circumstances described below. To the extent possible such requests shall be made before commencement of related construction at the Site.

1. Contractor shall submit sufficient information as provided below to allow Engineer to determine if the item of material or equipment proposed is functionally equivalent to that named and an acceptable substitute therefor. Engineer will not accept requests for review of proposed substitute items of material or equipment from anyone other than Contractor.

Copyright© 2018 National Society of Professional Engineers, American Council of Engineering Companies, and American Society of Civil Engineers. All rights reserved.

2. The requirements for review by Engineer will be as set forth in Paragraph 7.05.B, as supplemented by the Specifications, and as Engineer may decide is appropriate under the circumstances.

3. Contractor shall make written application to Engineer for review of a proposed substitute item of material or equipment that Contractor seeks to furnish or use. The application:

   a. shall certify that the proposed substitute item will:

      1) perform adequately the functions and achieve the results called for bythe general design,

      2) be similar in substance to that specified, and

      3) be suited to the same use as that specified.

   b. will state:

      1) the extent, if any, to which the use of the proposed substitute item will necessitate a change in Contract Times,

      2) whether use of the proposed substitute item in the Work will require a change in any of the Contract Documents (or in the provisions of any other direct contract with Owner for other work on the Project) to adapt the design to the proposed substitute item, and

      3) whether incorporation or use of the proposed substitute item in connection with the Work is subject to payment of any license fee or royalty.

   c. will identify:

      1) all variations of the proposed substitute item from that specified, and

      2) available engineering, sales, maintenance, repair, and replacement services.

   d. shall contain an itemized estimate of all costs or credits that will result directly or indirectly from use of such substitute item, including but not limited to changes in Contract Price, shared savings, costs of redesign, and claims of other contractors affected by any resulting change.

7.07 Concerning Subcontractors and Suppliers

SC-7.07.D Delete paragraph 7.07.D and insert the following in lieu thereof, and add subparagraph 7.06.7.1:

B. Contractor shall submit to the Owner a list of certain Subcontractors, Suppliers, or other individuals or entities for acceptance by Owner as stipulated in the Bidding Documents. Owner's acceptance (either in writing or by failing to make written objection thereto within two weeks of submittal of the list) of any such Subcontractor, Supplier, or other individual or entity so identified may be revoked on the basis of reasonable objection after due investigation.

   1. Subcontracting: Contractor shall perform with Contractor's own organization work amounting to not less than 51 percent of the combined value of all items of the Work covered by the Contract.

Copyright© 2018 National Society of Professional Engineers, American Council of Engineering Companies, and American Society of Civil Engineers. All rights reserved.

SC-7.07 Amend Paragraph 7.06.A by adding the following text to the end of the Paragraph:

The Contractor shall not award work valued at more than fifty percent of the Contract Price to Subcontractor(s), without prior written approval of the Owner.

7.10 *Taxes*

SC-7.10 Add a new paragraph immediately after Paragraph 7.10.A:

C. Owner is NOT exempt from payment of sales and compensating use taxes of the State of Oklahoma and of cities and counties thereof on all materials to be incorporated into the Work. Said sales and compensating use taxes should be incorporated into the price bid.

ARTICLE 8—OTHER WORK AT THE SITE

No suggested Supplementary Conditions in this Article.

ARTICLE 9—OWNER'S RESPONSIBILITIES

No suggested Supplementary Conditions in this Article.

ARTICLE 10—ENGINEER'S STATUS DURING CONSTRUCTION

10.03 Resident Project Representative

SC-10.03 Add the following new paragraphs immediately after Paragraph 10.03.B:

C. The Resident Project Representative (RPR) will be Engineer's representative at the Site. RPR's dealings in matters pertaining to the Work in general will be with Engineer and Contractor. RPR's dealings with Subcontractors will only be through or with the full knowledge or approval of Contractor. The RPR will:

1. *Conferences and Meetings:* Attend meetings with Contractor, such as preconstruction conferences, progress meetings, job conferences, and other Project-related meetings (but not including Contractor's safety meetings), and as appropriate prepare and circulate copies of minutes thereof.

2. *Safety Compliance:* Comply with Site safety programs, as they apply to RPR, and if required to do so by such safety programs, receive safety training specifically related to RPR's own personal safety while at the Site.

3. *Liaison*

   a. Serve as Engineer's liaison with Contractor. Working principally through Contractor's authorized representative or designee, assist in providing information regarding the provisions and intent of the Contract Documents.

   b. Assist Engineer in serving as Owner's liaison with Contractor when Contractor's operations affect Owner's on-Site operations.

   c. Assist in obtaining from Owner additional details or information, when required for Contractor's proper execution of the Work.

Copyright© 2018 National Society of Professional Engineers, American Council of Engineering Companies, and American Society of Civil Engineers. All rights reserved.

4. *Review of Work; Defective Work*

    a. Conduct on-Site observations of the Work to assist Engineer in determining, to the extent set forth in Paragraph 10.02, if the Work is in general proceeding in accordance with the Contract Documents.

    b. Observe whether any Work in place appears to be defective.

    c. Observe whether any Work in place should be uncovered for observation, or requires special testing, inspection or approval.

5. *Inspections and Tests*

    a. Observe Contractor-arranged inspections required by Laws and Regulations, including but not limited to those performed by public or other agencies having jurisdiction over the Work.

    b. Accompany visiting inspectors representing public or other agencies having jurisdiction over the Work.

6. *Payment Requests:* Review Applications for Payment with Contractor.

7. *Completion*

    a. Participate in Engineer's visits regarding Substantial Completion.

    b. Assist in the preparation of a punch list of items to be completed or corrected.

    c. Participate in Engineer's visit to the Site in the company of Owner and Contractor regarding completion of the Work, and prepare a final punch list of items to be completed or corrected by Contractor.

    d. Observe whether items on the final punch list have been completed or corrected.

D. The RPR will not:

1. Authorize any deviation from the Contract Documents or substitution of materials or equipment (including "or-equal" items).

2. Exceed limitations of Engineer's authority as set forth in the Contract Documents.

3. Undertake any of the responsibilities of Contractor, Subcontractors, or Suppliers.

4. Advise on, issue directions relative to, or assume control over any aspect of the means, methods, techniques, sequences or procedures of construction.

5 Advise on, issue directions regarding, or assume control over security or safety practices, precautions, and programs in connection with the activities or operations of Owner or Contractor.

6. Participate in specialized field or laboratory tests or inspections conducted off-site by others except as specifically authorized by Engineer.

7. Authorize Owner to occupy the Project in whole or in part.

Copyright© 2018 National Society of Professional Engineers, American Council of Engineering Companies, and American Society of Civil Engineers. All rights reserved.

ARTICLE 11—CHANGES TO THE CONTRACT

No suggested Supplementary Conditions in this Article.

ARTICLE 12—CLAIMS

No suggested Supplementary Conditions in this Article.

ARTICLE 13—COST OF WORK; ALLOWANCES, UNIT PRICE WORK

13.03 Unit Price Work

SC-13.03 Delete Paragraph 13.03.E in its entirety and insert the following in its place:

E. *Adjustments in Unit Price*

1. Contractor or Owner shall be entitled to an adjustment in the unit price with respect to an item of Unit Price Work if:

   a. the extended price of a particular item of Unit Price Work amounts to 20% percent or more of the Contract Price (based on estimated quantities at the time of Contract formation) and the variation in the quantity of that particular item of Unit Price Work actually furnished or performed by Contractor differs by more than 20% percent from the estimated quantity of such item indicated in the Agreement; and

   b. Contractor's unit costs to perform the item of Unit Price Work have changed materially and significantly as a result of the quantity change.

2. The adjustment in unit price will account for and be coordinated with any related changes in quantities of other items of Work, and in Contractor's costs to perform such other Work, such that the resulting overall change in Contract Price is equitable to Owner and Contractor.

3. Adjusted unit prices will apply to all units of that item.

ARTICLE 14—TESTS AND INSPECTIONS; CORRECTION, REMOVAL, OR ACCEPTANCE OF DEFECTIVE WORK

No suggested Supplementary Conditions in this Article.

ARTICLE 15—PAYMENTS TO CONTRACTOR; SET OFFS; COMPLETIONS; CORRECTION PERIOD

15.01 Progress Payments

SC-15.01.B Delete "At least twenty days before the date established for each progress payment (but not more than once a month)" in the first sentence of paragraph 15.01.B and insert "On the last day of each calendar month" in lieu thereof and add the following subparagraphs at the end of 15.01.B:

5. Stored Materials and Equipment: Payments for stored materials and equipment shall be based only upon the actual cost of the materials and equipment to Contractor and shall

Copyright© 2018 National Society of Professional Engineers, American Council of Engineering Companies, and American Society of Civil Engineers. All rights reserved.

not include any overhead or profit to Contractor. Partial payments will not be made for undelivered materials or equipment, except for payments associated with procurement contracts initiated by Owner and assigned to Contractor.

6. Schedules and Data: During the progress of the Work, each Application for Payment shall be accompanied by Contractor's updated schedule of operations, or progress report, with such shop drawings schedules, procurement schedules, value of material on hand included in application, and other data specified in Section 01 33 00 of the specifications or reasonably required by Engineer.

7. Payment for material delivered to the work site or stored under Owner's control will be based on the vendors' paid invoices or the bill of lading showing date of delivery and the work site where the delivery took place, a copy of which shall be furnished by Contractor to Engineer with each request for progress payment. Only those materials which have been incorporated into the Project or are stored under Owner's control may be included in the progress payment as material stored.

8. In addition to the amounts which Owner may retain as provided elsewhere in the Contract Documents, Owner may withhold a sufficient amount or amounts from any payment otherwise due Contractor as in Owner's judgment may be necessary to cover:

    a. Payments which may be due and payable for properly filed claims against Contractor or any Subcontractor for labor or materials furnished in or about the performance of the Contract.

    b. Estimated or actual costs for correcting defective work not remedied.

    c. Amounts claimed by Owner as forfeiture due to delays or other offsets. Owner may apply such withheld amount or amounts to the payment of such claim at Owner's discretion. In doing so, Owner shall be deemed the agent of Contractor and any payments so made by Owner shall be considered as a payment made under the Contract by Owner to Contractor, and Owner shall not be liable to Contractor for such payment made in good faith. Such payments may be made without prior judicial determination of the claim or claims. Owner shall render to Contractor a proper account of any such funds disbursed in or on behalf of Contractor.

9. Contractor shall disburse money paid to him, including any interest Contractor receives, to Subcontractors and Suppliers within 15 days after Contractor receives the money, in direct proportion to the Subcontractors' and Suppliers' basis in the total Contract between Contractor and Owner. Any money which is payable to a Subcontractor pursuant to this section accrues interest at the legal rate. Contractor may withhold 10 percent from the amount of any partial payment under a subcontract which is made before 50 percent of the Work has been completed under the subcontract. Thereafter Contractor shall pay any additional funds if, in the opinion of Contractor, satisfactory progress is being made in the work under the subcontract, and the payment must be equal to that paid by Owner to Contractor for the Work performed by the Subcontractor.

    a. The Contractor may retain the amount withheld under the subcontract until the subcontract is satisfactorily completed.

EJCDC® C-800, Supplementary Conditions of the Construction Contract.
Copyright© 2018 National Society of Professional Engineers, American Council of Engineering Companies, and American Society of Civil Engineers. All rights reserved.

b. The amount withheld under the subcontract is due within 15 days after the acceptance of the subcontract work by Contractor.

c. Whenever Contractor receives a payment of interest earned on the amount withheld from the Contract, Contractor shall within 15 days pay to each Subcontractor that portion of the interest received from the state which is attributable to the amount of money withheld from the Subcontractor.

SC-15.01.D Delete paragraph 15.01.D.1 and insert the following paragraph in lieu thereof:

1. Sixty (60) days after presentation of the Application for Payment to Owner with Engineer's recommendation, the amount recommended less amounts due to Owner and other amounts which are authorized to be reserved or retained by state law will (subject to the provisions of paragraph 15.01) become due and when due will be paid by Owner to Contractor.

15.03 Substantial Completion

SC-15.03.A Add the following subparagraphs immediately after paragraph 15.03.A:

1. For the work to be considered substantially complete, all portions of the work must be operational and ready for Owner's continuous use.

15.06 Final Payment

SC-15.06.E In the first sentence of paragraph 15.06.E, delete the word "Thirty" and replace with "Sixty".

SC-15.06.F Final Payments: Add the following subparagraphs immediately after paragraph 15.06.E:

E. Final Payments: At the project's completion, the Contractor shall execute a Release and Lien Waiver to release all claims against the Owner arising under and by virtue of his Contract. The date of the Release shall be that agreed to for the final acceptance of the project with the Owner. The Release form and Contractor's Affidavit form are included at the end of these Supplementary Conditions.

15.08 Correction Period

SC-15.08.A Delete "Substantial Completion" and insert "final acceptance" in lieu thereof.

SC-15.08.B Delete "Substantial Completion" and insert "final acceptance" in lieu thereof.

SC-15.08G Add the following paragraphs immediately after paragraph 15.08.F:

F. Contractor's obligation under this paragraph includes also providing a correction period from the substantial completion of any early completion items until the project's final completion and the beginning and completion of the 1-year completion's period as defined in paragraph 15.08.A.

G. Remedying Defects: If, at any time before expiration of the correction period under 15.08.A, Owner determines that the goods are defective, Contractor shall either correct the defects or remove the goods and replace them with non-defective goods.

H. Owner May Remedy: If Contractor fails to take action as required by Owner in accordance with paragraph 15.08.B, Owner may, after ten days' written notice to Contractor, remedy any such deficiency, instead of requiring removal or replacement. In an emergency where

Copyright© 2018 National Society of Professional Engineers, American Council of Engineering Companies, and American Society of Civil Engineers. All rights reserved.

delay would cause serious risk of loss or damage, Owner may take such action without notice to or waiting for action by Contractor.

I. Correction Period: Contractor's responsibility for remedying defects will extend for a period of one (1) year after date of final acceptance, or for such longer period of time as may be prescribed by law or by provisions of manufacturer's warranty or guarantee in conformance with the Contract Documents.

ARTICLE 16—SUSPENSION OF WORK AND TERMINATION

16.01 Owner May Suspend Work

SC-16.01 Delete paragraph 16.01.A and insert the following in lieu thereof:

A. At any time and without cause, Owner may suspend the Work or any portion thereof for a period of not more than 90 consecutive days by written notice to Contractor and Engineer. Such notice will fix the date on which Work will be resumed. Contractor shall resume the Work on the date so fixed. At the discretion of the Owner, the Contractor may be entitled to an adjustment in the Contract Price or an extension of the Contract Times, or both, directly attributable to any such suspension. Any Change Proposal seeking such adjustments shall be submitted no later than 30 days after the date fixed for resumption of Work.

16.02 Owner May Terminate for Cause

SC-16.02 Delete paragraphs 16.02.A through 16.02.D and insert the following in lieu thereof:

A. If Contractor refuses or fails to prosecute the Work or any separable part thereof with such diligence as will ensure the completion of the Work within the Contract Times, or any extension thereof, or fails or refuses to complete such Work within such extension, or if Contractor should be adjudged bankrupt, or if Contractor should make assignment for the benefit of Contractor's creditors, or if Contractor files a petition to take advantage of any debtor's act, or if a receiver should be appointed on account of Contractor's insolvency, or if Contractor or any Subcontractor should violate any provision of the Contract, or if Contractor should persistently refuse or should fail to supply enough properly skilled workmen or proper materials to complete the Work in the time specified, or if Contractor should fail to make prompt payment to Subcontractors or for materials or labor, or if Contractor should disregard laws, ordinances, or instructions given by Owner, Engineer, or Owner's Operating Agent or disregard in any substantial way any provisions of the Contract Documents; Owner may without prejudice to any other right or remedy, serve written notice upon Contractor and Contractor's surety of Owner's intention to terminate the Contract. Such notice will contain the reasons for Owner's intention to terminate the Contract and unless such violations shall cease and satisfactory arrangements for the corrections thereof have been accepted by Owner in writing within 10 days after the service of such notice, the Contract shall upon the expiration of said 10 days cease and terminate. In the event of such termination, the Owner shall immediately serve written notice upon the Surety and Contractor, and Contractor shall be liable for all costs necessary to complete the Work.

B. The Surety shall, after receipt of notification from Owner of termination of the Contract, take over and perform the Work, utilizing a contractor which qualified under the prequalification

Copyright© 2018 National Society of Professional Engineers, American Council of Engineering Companies, and American Society of Civil Engineers. All rights reserved.

criteria and which is acceptable to Engineer. The Surety shall, within 10 days after receipt of the notice of termination, provide Owner with written notice of Surety's intent to take over and complete the Work in accordance with the Contract Documents, and shall commence the Work within 10 days thereafter.

C. If the Surety does not reply to the notice of termination, or fails to perform the Work in compliance with the Contract Documents, or provides the Owner with written notice that Surety does not intend to take over and perform the Work to completion, Owner may without prejudice on the part of the Surety, take over the Work and prosecute the same to completion by any method Owner may deem advisable for the account at the expense of Contractor, and the Surety shall be liable to Owner for any excess cost or other damage occasioned Owner thereby. In such event Owner may, without liability for so doing, take possession of and utilize in completing the Work such materials, appliances, plant, and other property belonging to Contractor that may be on the work sites and be necessary therefor. Contractor shall turn over to Owner's Operating Agent all materials and equipment in Contractor's possession that is to be incorporated into the Project, and shall make arrangements with Owner to turn over any materials or equipment in which Owner has made payment or partial payment but is not in Owner's possession.

D. Upon completion of the Work, if the unpaid balance of the Contract Price exceeds the direct and indirect cost of completing the Work, including, but not limited to, all costs incurred by Owner from professional services and attorneys' fees and all costs generated to insure or bond the Work of substituted contractors or subcontractors used to complete the Work, such excess shall be paid to Contractor. If such costs exceed the unpaid balance, Contractor shall pay the difference to Owner within 30 days upon demand; on failure of Contractor to pay, the Surety shall promptly pay the difference to Owner upon written notice of Contractor's failure of payment. Such difference or any portion thereof not paid by the Contractor or the Surety within the 30 days following the date of mailing of the demand for payment, shall earn interest at the rate of 10 percent per annum or the maximum rate authorized by state law, whichever is lower.

16.04 Contractor May Stop Work or Terminate

SC-16.04 Delete paragraph 16.04 in its entirety.

ARTICLE 17—FINAL RESOLUTION OF DISPUTES

No suggested Supplementary Conditions in this Article.

ARTICLE 18—MISCELLANEOUS

No suggested Supplementary Conditions in this Article

Copyright© 2018 National Society of Professional Engineers, American Council of Engineering Companies, and American Society of Civil Engineers. All rights reserved.

OKLAHOMA WATER RESOURCES BOARD

Supplemental Conditions

for

Projects funded from the

Clean Water State Revolving Loan Fund

RULES AND REGULATIONS

TITLE 41 - PUBLIC CONTRACT AND PROPERTY MANAGEMENT

CHAPTER 60 - OFFICE OF FEDERAL CONTRACT COMPLIANCE PROGRAMS, EQUAL EMPLOYMENT OPPORTUNITY, DEPARTMENT OF LABOR COMPLIANCE RESPONSIBILITY FOR EQUAL EMPLOYMENT OPPORTUNITY FINAL RULE

60–1.4 Equal opportunity clause.

(b) Federally assisted construction contracts.

(1) Except as otherwise provided, each administering agency shall require the inclusion of the following language as a condition of any grant, contract, loan, insurance, or guarantee involving federally assisted construction which is not exempt from the requirements of the equal opportunity clause:

The applicant hereby agrees that it will incorporate or cause to be incorporated into any contract for construction work, or modification thereof, as defined in the regulations of the Secretary of Labor at 41 CFR Chapter 60, which is paid for in whole or in part with funds obtained from the Federal Government or borrowed on the credit of the Federal Government pursuant to a grant, contract, loan insurance, or guarantee, or undertaken pursuant to any Federal program involving such grant, contract, loan, insurance, or guarantee, the following equal opportunity clause:

During the performance of this contract, the contractor agrees as follows:

(1) The contractor will not discriminate against any employee or applicant for employment because of race, color, religion, sex, or national origin. The contractor will take affirmative action to ensure that applicants are employed, and that employees are treated during employment without regard to their race, color, religion, sex, or national origin. such action shall include, but not be limited to the following: Employment, upgrading, demotion, or transfer; recruitment or recruitment advertising; layoff or termination; rates of pay or other forms of compensation; and selection for training, including apprenticeship. The contractor agrees to post in conspicuous places, available to employees and applicants for employment, notices to be provided setting forth the provisions of this nondiscrimination clause.

(2) The contractor will, in all solicitations or advertisements for employees placed by or on behalf of the contractor, state that all qualified applicants will receive considerations for employment without regard to race, color, religion, sex, or national origin.

(3) The contractor will send to each labor union or representative of workers with which he has a collective bargaining agreement or other contract or understanding, a notice to be provided advising the said labor union or workers' representatives of the contractor's commitments under this section, and shall post copies of the notice in conspicuous places available to employees and applicants for employment.

(4) The contractor will comply with all provisions of Executive Order 11246 of September 24, 1965, and of the rules, regulations, and relevant orders of the Secretary of Labor.

(5) The contractor will furnish all information and reports required by Executive Order 11246 of September 24, 1965, and by rules, regulations, and orders of the Secretary of Labor, or pursuant thereto, and will permit access to his books, records, and accounts by the administering agency and the Secretary of Labor for purposes of investigation to ascertain compliance with such rules, regulations, and orders.

(6) In the event of the contractor's noncompliance with the nondiscrimination clauses of this contract or with any of the said rules, regulations, or orders, this contract may be canceled, terminated, or suspended in whole or in part and the contractor may be declared ineligible for further Government contracts or federally assisted construction contracts in accordance with procedures authorized in Executive Order 11246 of September 24, 1965, and such other sanctions may be imposed and remedies invoked as provided in Executive Order 11246 of September 24, 1965, or by rule, regulation, or order of the Secretary of Labor, or as otherwise provided by law.

(7) The contractor will include the portion of the sentence immediately preceding paragraph (1) and the provisions of paragraphs (1) through (7) in every subcontract or purchase order unless exempted by rules, regulations, or orders of the Secretary of Labor issued pursuant to section 204 of Executive Order 11246 of September 24, 1965, so that such provisions will be binding upon each subcontractor or vendor. The contractor will take such action with respect to any subcontract or purchase order as the administering agency may direct as a means of enforcing such provisions, including sanctions for noncompliance: Provided, however, That in the event a contractor becomes involved in, or is threatened with, litigation with a subcontractor or vendor as a result of such direction by the administering agency the contractor may request the United States to enter into such litigation to protect the interests of the United States.

The applicant further agrees that it will be bound by the above equal opportunity clause with respect to its own employment practices when it participates in federally assisted construction work: Provided, That if the applicant so participating is a State or local government, the above equal opportunity clause is not applicable to any agency, instrumentality or subdivision of such government which does not participate in work on or under the contract.

The applicant agrees that it will assist and cooperate actively with the administering agency and the Secretary of Labor in obtaining the compliance of contractors and subcontractors with the equal opportunity clause and the rules, regulations, and relevant orders of the Secretary of Labor, that it will furnish the administering agency and the Secretary of Labor such information as they may require for the supervision of such compliance, and that it will otherwise assist the administering agency in the discharge of the agency's primary responsibility for securing compliance.

The applicant further agrees that it will refrain from entering into any contract or contract modification subject to Executive Order 11246 of September 24, 1965, with a contractor debarred from, or who has not demonstrated eligibility for, Government contracts and federally assisted construction contracts pursuant to the Executive order and will carry out such sanctions and penalties for violation of the equal opportunity clause as may be imposed upon contractors and subcontractors by the administering agency or the Secretary of Labor pursuant to Part II, Subpart D of the Executive order. In addition, the applicant agrees that if it fails or refuses to comply with these undertakings, the administering agency may take any or all of the following actions: Cancel, terminate, or suspend in whole or in part this grant (contract, loan, insurance, guarantee); refrain from extending any further assistance to the applicant under the program with respect to which the failure or refund occurred until satisfactory assurance of future compliance has been received from such applicant; and refer the case to the Department of Justice for appropriate legal proceedings.

(c) Subcontracts. Each nonexempt prime contractor or subcontractor shall include the equal opportunity clause in each of its nonexempt subcontracts.

(d) Incorporation by reference. The equal opportunity clause may be incorporated by reference in all Government contracts and subcontracts, including Government bills of lading, transportation requests, contracts for deposit of Government funds, and contracts for issuing and paying U.S. savings bonds and notes, and such other contracts and subcontracts as the Deputy Assistant Secretary may designate.

(e) Incorporation by operation of the order. By operation of the order, the equal opportunity clause shall be considered to be a part of every contract and subcontract required by the order and the regulations in this part to include such a clause whether or not it is physically incorporated in such contracts and whether or not the contract between the agency and the contractor is written.

(f) Adaptation of language. Such necessary changes in language may be made in the equal opportunity clause as shall be appropriate to identify properly the parties and their undertakings.

[43 FR 49240, Oct. 20, 1978, as amended at 62 FR 66971, Dec. 22, 1997]

60-4.2 Solicitations.

(a) All Federal contracting officers and all applicants shall include the notice set forth in paragraph (d) of this section and the Standard Federal Equal Employment Opportunity Construction Contract Specifications set forth in § 60-4.3 of this part in all solicitations for offers and bids on all Federal and federally assisted construction contracts or subcontracts to be performed in geographical areas designated by the Director pursuant to § 60-4.6 of the part. Administering agencies shall require the inclusion of the notice set forth in paragraph (d)

of this section and the specifications set forth in § 60-4.3 of this part as a condition of any grant, contract, subcontract, loan, insurance or guarantee involving federally assisted construction covered by this Part 60-4.

(b) All nonconstruction contractors covered by Executive Order 11246 and the implementing regulations shall include the notice in paragraph (d) of this section in all construction agreements which are necessary in whole or in part to the performance of the covered nonconstruction contract.

(c) Contracting officers, applicants and nonconstruction contractors shall given written notice to the Director within 10 working days of award of a contract subject to these provisions. The notification shall include the name, address and telephone number of the contractor; employer identification number; dollar amount of the contract, estimated starting and completion dates of the contract; the contract number; and geographical area in which the contract is to be performed.

(d) The following notice shall be included in, and shall be a part of, all solicitations for offers and bids on all Federal and federally assisted construction contracts or subcontracts in excess of $10,000 to be performed in geographical areas designated by the Director pursuant to § 60-4.6 of this part (see 41 CFR 60-4.2(a)):

Notice of Requirement for Affirmative Action To Ensure Equal Employment Opportunity (Executive Order 11246)

1. The Offeror's or Bidder's attention is called to the "Equal Opportunity Clause" and the "Standard Federal Equal Employment Specifications" set forth herein.
2. The goals and timetables for minority and female participation, expressed in percentage terms for the Contractor's aggregate workforce in each trade on all construction work in the covered area, are as follows:

Goals for MBE

CONSTRUCTION 13.94%; SUPPLIES - 7.48%; SERVICES - 14.29%; EQUIPMENT - 9.13%

Goals for WBE

CONSTRUCTION - 6.92%; SUPPLIES - 0; SERVICES - 26.51%; EQUIPMENT - 19.90%

These goals are applicable to all the Contractor's construction work (whether or not it is Federal or federally assisted) performed in the covered area. If the contractor performs construction work in a geographical area located outside of the covered area, it shall apply the goals established for such geographical area where the work is actually performed. With regard to this second area, the contractor also is subject to the goals for both its federally involved and nonfederally involved construction.

The Contractor's compliance with the Executive Order and the regulations in 41 CFR Part 60-4 shall be based on its implementation of the Equal Opportunity Clause, specific affirmative action obligations required by the specifications set forth in 41 CFR 60-4.3(a), and its efforts to meet the goals. The hours of minority and female employment and training must be substantially uniform throughout the length of the contract, and in each trade, and the contractor shall make a good faith effort to employ minorities and women evenly on each of its projects. The transfer of minority or female employees or trainees from Contractor to Contractor or from project to project for the sole purpose of meeting the Contractor's goals shall be a violation of the contract, the Executive Order and the regulations in 41 CFR Part 60-4. Compliance with the goals will be measured against the total work hours performed.

3. The Contractor shall provide written notification to the Director of the Office of Federal Contract Compliance Programs within 10 working days of award of any construction subcontract in excess of $10,000 at any tier for construction work under the contract resulting from this solicitation. The notification shall list the name, address and telephone number of the subcontractor; employer identification number of the subcontractor; estimated dollar amount of the subcontract; estimated starting and completion dates of the subcontract; and the geographical area in which the subcontract is to be performed.
4. As used in this Notice, and in the contract resulting from this solicitation, the "covered area" is (insert description of the geographical areas where the contract is to be performed giving the state, county and city, if any).

[43 FR 49254, Oct. 20, 1978; 43 FR 51401, Nov. 3, 1978, as amended at 45 FR 65977, Oct. 3, 1980]

60-4.3 Equal opportunity clauses.

(a) The equal opportunity clause published at 41 CFR 60-1.4(a) of this chapter is required to be included in, and is part of, all nonexempt Federal contracts and subcontracts, including construction contracts and subcontracts. The

equal opportunity clause published at 41 CFR 60-1.4(b) is required to be included in, and is a part of, all nonexempt federally assisted construction contracts and subcontracts. In addition to the clauses described above, all Federal contracting officers, all applicants and all nonconstruction contractors, as applicable, shall include the specifications set forth in this section in all Federal and federally assisted construction contracts in excess of $10,000 to be performed in geographical areas designated by the Director pursuant to § 60-4.6 of this part and in construction subcontracts in excess of $10,000 necessary in whole or in part to the performance of nonconstruction Federal contracts and subcontracts covered under the Executive order.

Standard Federal Equal Employment Opportunity Construction Contract Specifications (Executive Order 11246)

1. As used in these specifications:
   a. "Covered area" means the geographical area described in the solicitation from which this contract resulted;
   b. "Director" means Director, Office of Federal Contract Compliance Programs, United States Department of Labor, or any person to whom the Director delegates authority;
   c. "Employer identification number" means the Federal Social Security number used on the Employer's Quarterly Federal Tax Return, U.S. Treasury Department Form 941.
   d. "Minority" includes:
      (i) Black (all persons having origins in any of the Black African racial groups not of Hispanic origin);
      (ii) Hispanic (all persons of Mexican, Puerto Rican, Cuban, Central or South American or other Spanish Culture or origin, regardless of race);
      (iii) Asian and Pacific Islander (all persons having origins in any of the original peoples of the Far East, Southeast Asia, the Indian Subcontinent, or the Pacific Islands); and
      (iv) American Indian or Alaskan Native (all persons having origins in any of the original peoples of North America and maintaining identifiable tribal affiliations through membership and participation or community identification).
2. Whenever the Contractor, or any Subcontractor at any tier, subcontracts a portion of the work involving any construction trade, it shall physically include in each subcontract in excess of $10,000 the provisions of these specifications and the Notice which contains the applicable goals for minority and female participation and which is set forth in the solicitations from which this contract resulted.
3. If the Contractor is participating (pursuant to 41 CFR 60-4.5) in a Hometown Plan approved by the U.S. Department of Labor in the covered area either individually or through an association, its affirmative action obligations on all work in the Plan area (including goals and timetables) shall be in accordance with that Plan for those trades which have unions participating in the Plan. Contractors must be able to demonstrate their participation in and compliance with the provisions of any such Hometown Plan. Each Contractor or Subcontractor participating in an approved Plan is individually required to comply with its obligations under the EEO clause, and to make a good faith effort to achieve each goal under the Plan in each trade in which it has employees. The overall good faith performance by other Contractors or Subcontractors toward a goal in an approved Plan does not excuse any covered Contractor's or Subcontractor's failure to take good faith efforts to achieve the Plan goals and timetables.
4. The Contractor shall implement the specific affirmative action standards provided in paragraphs 7 a through p of these specifications. The goals set forth in the solicitation from which this contract resulted are expressed as percentages of the total hours of employment and training of minority and female utilization the Contractor should reasonably be able to achieve in each construction trade in which it has employees in the covered area. Covered Construction contractors performing construction work in geographical areas where they do not have a Federal or federally assisted construction contract shall apply the minority and female goals established for the geographical area where the work is being performed. Goals are published periodically in the Federal Register in notice form, and such notices may be obtained from any Office of Federal Contract Compliance Programs office or

from Federal procurement contracting officers. The Contractor is expected to make substantially uniform progress in meeting its goals in each craft during the period specified.

5. Neither the provisions of any collective bargaining agreement, nor the failure by a union with whom the Contractor has a collective bargaining agreement, to refer either minorities or women shall excuse the Contractor's obligations under these specifications, Executive Order 11246, or the regulations promulgated pursuant thereto.
6. In order for the nonworking training hours of apprentices and trainees to be counted in meeting the goals, such apprentices and trainees must be employed by the Contractor during the training period, and the Contractor must have made a commitment to employ the apprentices and trainees at the completion of their training, subject to the availability of employment opportunities. Trainees must be trained pursuant to training programs approved by the U.S. Department of Labor.
7. The Contractor shall take specific affirmative actions to ensure equal employment opportunity. The evaluation of the Contractor's compliance with these specifications shall be based upon its effort to achieve maximum results from its actions. The Contractor shall document these efforts fully, and shall implement affirmative action steps at least as extensive as the following:
    a. Ensure and maintain a working environment free of harassment, intimidation, and coercion at all sites, and in all facilities at which the Contractor's employees are assigned to work. The Contractor, where possible, will assign two or more women to each construction project. The Contractor shall specifically ensure that all foremen, superintendents, and other on-site supervisory personnel are aware of and carry out the Contractor's obligation to maintain such a working environment, with specific attention to minority or female individuals working at such sites or in such facilities.
    b. Establish and maintain a current list of minority and female recruitment sources, provide written notification to minority and female recruitment sources and to community organizations when the Contractor or its unions have employment opportunities available, and maintain a record of the organizations' responses.
    c. Maintain a current file of the names, addresses and telephone numbers of each minority and female off-the-street applicant and minority or female referral from a union, a recruitment source or community organization and of what action was taken with respect to each such individual. If such individual was sent to the union hiring hall for referral and was not referred back to the Contractor by the union or, if referred, not employed by the Contractor, this shall be documented in the file with the reason therefor, along with whatever additional actions the Contractor may have taken.
    d. Provide immediate written notification to the Director when the union or unions with which the Contractor has a collective bargaining agreement has not referred to the Contractor a minority person or woman sent by the Contractor, or when the Contractor has other information that the union referral process has impeded the Contractor's efforts to meet its obligations.
    e. Develop on-the-job training opportunities and/or participate in training programs for the area which expressly include minorities and women, including upgrading programs and apprenticeship and trainee programs relevant to the Contractor's employment needs, especially those programs funded or approved by the Department of Labor. The Contractor shall provide notice of these programs to the sources compiled under 7b above.
    f. Disseminate the Contractor's EEO policy by providing notice of the policy to unions and training programs and requesting their cooperation in assisting the Contractor in meeting its EEO obligations; by including it in any policy manual and collective bargaining agreement; by publicizing it in the company newspaper, annual report, etc.; by specific review of the policy with all management personnel and with all minority and female employees at least once a year; and by posting the company EEO policy on bulletin boards accessible to all employees at each location where construction work is

performed.

g. Review, at least annually, the company's EEO policy and affirmative action obligations under these specifications with all employees having any responsibility for hiring, assignment, layoff, termination or other employment decisions including specific review of these items with onsite supervisory personnel such as Superintendents, General Foremen, etc., prior to the initiation of construction work at any job site. A written record shall be made and maintained identifying the time and place of these meetings, persons attending, subject matter discussed, and disposition of the subject matter.

h. Disseminate the Contractor's EEO policy externally by including it in any advertising in the news media, specifically including minority and female news media, and providing written notification to and discussing the Contractor's EEO policy with other Contractors and Subcontractors with whom the Contractor does or anticipates doing business.

i. Direct its recruitment efforts, both oral and written, to minority, female and community organizations, to schools with minority and female students and to minority and female recruitment and training organizations serving the Contractor's recruitment area and employment needs. Not later than one month prior to the date for the acceptance of applications for apprenticeship or other training by any recruitment source, the Contractor shall send written notification to organizations such as the above, describing the openings, screening procedures, and tests to be used in the selection process.

j. Encourage present minority and female employees to recruit other minority persons and women and, where reasonable, provide after school, summer and vacation employment to minority and female youth both on the site and in other areas of a Contractor's work force.

k. Validate all tests and other selection requirements where there is an obligation to do so under 41 CFR Part 60-3.

l. Conduct, at least annually, an inventory and evaluation at least of all minority and female personnel for promotional opportunities and encourage these employees to seek or to prepare for, through appropriate training, etc., such opportunities.

m. Ensure that seniority practices, job classifications, work assignments and other personnel practices, do not have a discriminatory effect by continually monitoring all personnel and employment related activities to ensure that the EEO policy and the Contractor's obligations under these specifications are being carried out.

n. Ensure that all facilities and company activities are nonsegregated except that separate or single-user toilet and necessary changing facilities shall be provided to assure privacy between the sexes.

o. Document and maintain a record of all solicitations of offers for subcontracts from minority and female construction contractors and suppliers, including circulation of solicitations to minority and female contractor associations and other business associations.

p. Conduct a review, at least annually, of all supervisors' adherence to and performance under the Contractor's EEO policies and affirmative action obligations.

8. Contractors are encouraged to participate in voluntary associations which assist in fulfilling one or more of their affirmative action obligations (7a through p). The efforts of a contractor association, joint contractor-union, contractor-community, or other similar group of which the contractor is a member and participant, may be asserted as fulfilling any one or more of its obligations under 7a through p of these Specifications provided that the contractor actively participates in the group, makes every effort to assure that the group has a positive impact on the employment of minorities and women in the industry, ensures that the concrete benefits of the program are reflected in the Contractor's minority and female workforce participation, makes a good faith effort to meet its individual goals and timetables, and can provide access to documentation which demonstrates the effectiveness of actions taken on behalf of the Contractor. The

obligation to comply, however, is the Contractor's and failure of such a group to fulfill an obligation shall not be a defense for the Contractor's noncompliance.

9. A single goal for minorities and a separate single goal for women have been established. The Contractor, however, is required to provide equal employment opportunity and to take affirmative action for all minority groups, both male and female, and all women, both minority and non-minority. Consequently, the Contractor may be in violation of the Executive Order if a particular group is employed in a substantially disparate manner (for example, even though the Contractor has achieved its goals for women generally, the Contractor may be in violation of the Executive Order if a specific minority group of women is underutilized).
10. The Contractor shall not use the goals and timetables or affirmative action standards to discriminate against any person because of race, color, religion, sex, or national origin.
11. The Contractor shall not enter into any Subcontract with any person or firm debarred from Government contracts pursuant to Executive Order 11246.
12. The Contractor shall carry out such sanctions and penalties for violation of these specifications and of the Equal Opportunity Clause, including suspension, termination and cancellation of existing subcontracts as may be imposed or ordered pursuant to Executive Order 11246, as amended, and its implementing regulations, by the Office of Federal Contract Compliance Programs. Any Contractor who fails to carry out such sanctions and penalties shall be in violation of these specifications and Executive Order 11246, as amended.
13. The Contractor, in fulfilling its obligations under these specifications, shall implement specific affirmative action steps, at least as extensive as those standards prescribed in paragraph 7 of these specifications, so as to achieve maximum results from its efforts to ensure equal employment opportunity. If the Contractor fails to comply with the requirements of the Executive Order, the implementing regulations, or these specifications, the Director shall proceed in accordance with 41 CFR 60-4.8.
14. The Contractor shall designate a responsible official to monitor all employment related activity to ensure that the company EEO policy is being carried out, to submit reports relating to the provisions hereof as may be required by the Government and to keep records. Records shall at least include for each employee the name, address, telephone numbers, construction trade, union affiliation if any, employee identification number when assigned, social security number, race, sex, status (e.g., mechanic, apprentice trainee, helper, or laborer), dates of changes in status, hours worked per week in the indicated trade, rate of pay, and locations at which the work was performed. Records shall be maintained in an easily understandable and retrievable form; however, to the degree that existing records satisfy this requirement, contractors shall not be required to maintain separate records.
15. Nothing herein provided shall be construed as a limitation upon the application of other laws which establish different standards of compliance or upon the application of requirements for the hiring of local or other area residents (e.g., those under the Public Works Employment Act of 1977 and the Community Development Block Grant Program).

(b) The notice set forth in 41 CFR 60-4.2 and the specifications set forth in 41 CFR 60-4.3 replace the New Form for Federal Equal Employment Opportunity Bid Conditions for Federal and Federally Assisted Construction published at 41 FR 32482 and commonly known as the Model Federal EEO Bid Conditions, and the New Form shall not be used after the regulations in 41 CFR Part 60-4 become effective.

[43 FR 49254, Oct. 20, 1978; 43 FR 51401, Nov. 3, 1978, as amended at 45 FR 65978, Oct. 3, 1980]

DAVIS BACON ACT REQUIREMENTS (subchapter IV of Chapter 31 of Title 40, United States Code and 29 CFR parts 1, 3, and 5) (SEE APPENDIX 1 FOR CLARIFYING INFORMATION)

The Project or Program to which the construction work covered by this contract pertains is being assisted by the United States of America and the following Federal Labor Standards Provisions are included in this contract pursuant to the provisions applicable to such assistance.

(a) Any contract in excess of $2,000 which is entered into for the actual construction, alteration and/or repair, including painting and decorating, of a public building or public work, or building or work

financed in whole or in part from Federal funds or in accordance with guarantees of a Federal agency or financed from funds obtained by pledge of any contract of a Federal agency to make a loan, grant or annual contribution (except where a different meaning is expressly indicated), and which is subject to the labor standards provisions of any of the acts listed in Sec. 5.1.

(1) Minimum wages. (i) All laborers and mechanics employed or working upon the site of the work will be paid unconditionally and not less often than once a week, and without subsequent deduction or rebate on any account (except such payroll deductions as are permitted by regulations issued by the Secretary of Labor under the Copeland Act (29 CFR part 3)), the full amount of wages and bona fide fringe benefits (or cash equivalents thereof) due at time of payment computed at rates not less than those contained in the wage determination of the Secretary of Labor which is attached hereto and made a part hereof, regardless of any contractual relationship which may be alleged to exist between the contractor and such laborers and mechanics.

Contributions made or costs reasonably anticipated for bona fide fringe benefits under section 1(b)(2) of the Davis-Bacon Act on behalf of laborers or mechanics are considered wages paid to such laborers or mechanics, subject to the provisions of paragraph (a)(1)(iv) of this section; also, regular contributions made or costs incurred for more than a weekly period (but not less often than quarterly) under plans, funds, or programs which cover the particular weekly period, are deemed to be constructively made or incurred during such weekly period. Such laborers and mechanics shall be paid the appropriate wage rate and fringe benefits on the wage determination for the classification of work actually performed, without regard to skill, except as provided in Sec. 5.5(a)(4). Laborers or mechanics performing work in more than one classification may be compensated at the rate specified for each classification for the time actually worked therein: Provided, That the employer's payroll records accurately set forth the time spent in each classification in which work is performed. The wage determination (including any additional classification and wage rates conformed under paragraph (a)(1)(ii) of this section) and the Davis-Bacon poster (WH-1321) shall be posted at all times by the contractor and its subcontractors at the site of the work in a prominent and accessible place where it can be easily seen by the workers.

(ii)(A) The contracting officer shall require that any class of laborers or mechanics, including helpers, which is not listed in the wage determination and which is to be employed under the contract shall be classified in conformance with the wage determination. The contracting officer shall approve an additional classification and wage rate and fringe benefits therefore only when the following criteria have been met:

(1) The work to be performed by the classification requested is not performed by a classification in the wage determination; and

(2) The classification is utilized in the area by the construction industry; and

(3) The proposed wage rate, including any bona fide fringe benefits, bears a reasonable relationship to the wage rates contained in the wage determination.

(B) If the contractor and the laborers and mechanics to be employed in the classification (if known), or their representatives, and the contracting officer agree on the classification and wage rate (including the amount designated for fringe benefits where appropriate), a report of the action taken shall be sent by the contracting officer to the Administrator of the Wage and Hour Division, Employment Standards Administration, U.S. Department of Labor, Washington, DC 20210. The Administrator, or an authorized representative, will approve, modify, or disapprove every additional classification action within 30 days of receipt and so advise the contracting officer or will notify the contracting officer within the 30-day period that additional time is necessary.

(C) In the event the contractor, the laborers or mechanics to be employed in the classification or their representatives, and the contracting officer do not agree on the proposed classification and wage rate (including the amount designated for fringe benefits, where appropriate), the contracting officer shall refer the questions, including the views of all interested parties and the recommendation of the contracting officer, to the Administrator for determination. The Administrator, or an authorized representative, will issue a determination within 30 days of receipt and so advise the contracting officer or will notify the contracting officer within the 30-day period that additional time is necessary.

(D) The wage rate (including fringe benefits where appropriate)determined pursuant to paragraphs (a)(1)(ii) (B) or (C) of this section, shall be paid to all workers performing work in the classification under this contract from the first day on which work is performed in the classification.

(iii) Whenever the minimum wage rate prescribed in the contract for a class of laborers or mechanics includes a fringe benefit which is not expressed as an hourly rate, the contractor shall either pay the benefit as stated in the wage determination or shall pay another bona fide fringe benefit or an hourly cash equivalent thereof.

(iv) If the contractor does not make payments to a trustee or other third person, the contractor may consider as part of the wages of any laborer or mechanic the amount of any costs reasonably anticipated in providing bona fide fringe benefits under a plan or program, Provided, That the Secretary of Labor has found, upon the written request of the contractor, that the applicable standards of the Davis-Bacon Act have been met. The Secretary of Labor may require the contractor to set aside in a separate account assets for the meeting of obligations under the plan or program.

(2) Withholding. The ***OWRB SRF*** or the ***Owner*** shall upon its own action or upon written request of an authorized representative of the Department of Labor withhold or cause to be withheld from the contractor under this contract or any other Federal contract with the same prime contractor, or any other federally-assisted contract subject to Davis-Bacon prevailing wage requirements, which is held by the same prime contractor, so much of the accrued payments or advances as may be considered necessary to pay laborers and mechanics, including apprentices, trainees, and helpers, employed by the contractor or any subcontractor the full amount of wages required by the contract. In the event of failure to pay any laborer or mechanic, including any apprentice, trainee, or helper, employed or working on the site of the work, all or part of the wages required by the contract, the (Agency) may, after written notice to the contractor, sponsor, applicant, or owner, take such action as may be necessary to cause the suspension of any further payment, advance, or guarantee of funds until such violations have ceased.

(3) Payrolls and basic records. (i) Payrolls and basic records relating thereto shall be maintained by the contractor during the course of the work and preserved for a period of three years thereafter for all laborers and mechanics working at the site of the work. Such records shall contain the name, address, and social security number of each such worker, his or her correct classification, hourly rates of wages paid (including rates of contributions or costs anticipated for bona fide fringe benefits or cash equivalents thereof of the types described in section 1(b)(2)(B) of the Davis-Bacon Act), daily and weekly number of hours worked, deductions made and actual wages paid. Whenever the Secretary of Labor has found under 29 CFR 5.5(a)(1)(iv) that the wages of any laborer or mechanic include the amount of any costs reasonably anticipated in providing benefits under a plan or program described in section 1(b)(2)(B) of the Davis-Bacon Act, the contractor shall maintain records which show that the commitment to provide such benefits is enforceable, that the plan or program is financially responsible, and that the plan or program has been communicated in writing to the laborers or mechanics affected, and records which show the costs anticipated or the actual cost incurred in providing such benefits. Contractors employing apprentices or trainees under approved programs shall maintain written evidence of the registration of apprenticeship programs and certification of trainee programs, the registration of the apprentices and trainees, and the ratios and wage rates prescribed in the applicable programs.

(ii)(A) The contractor shall submit weekly for each week in which any contract work is performed a copy of all payrolls to the ***Owner for transmission to the OWRB SRF***. The payrolls submitted shall set out accurately and completely all of the information required to be maintained under 29 CFR 5.5(a)(3)(i), except that full social security numbers and home addresses shall not be included on weekly transmittals. Instead the payrolls shall only need to include an individually identifying number for each employee (e.g., the last four digits of the employee's social security number). The required weekly payroll information may be submitted in any form desired. Optional Form WH-347 is available for this purpose from the Wage and Hour Division Web site at beta.SAM.gov or its successor site. The prime contractor is responsible for the submission of copies of payrolls by all subcontractors.

Contractors and subcontractors shall maintain the full social security number and current address of each covered worker, and shall provide them upon request to the ***OWRB SRF*** if the agency is a party to the contract, but if the agency is not such a party, the contractor will submit them to the ***Owner***, as the case may be, for transmission to the ***OWRB SRF***, the contractor, or the Wage and Hour Division of the Department of Labor for purposes of an investigation or audit of compliance with prevailing wage requirements. It is not a violation of this section for a prime contractor to require a subcontractor to provide addresses and social security numbers to the prime contractor for its own records, without weekly submission to the Owner.

(B) Each payroll submitted shall be accompanied by a "Statement of Compliance" signed by the contractor or subcontractor or his or her agent who pays or supervises the payment of the persons employed under the contract and shall certify the following:

(1) That the payroll for the payroll period contains the information required to be provided under Sec. 5.5 (a)(3)(ii) of Regulations, 29 CFR part 5, the appropriate information is being maintained under Sec. 5.5 (a)(3)(i) of Regulations, 29 CFR part 5, and that such information is correct and complete;

(2) That each laborer or mechanic (including each helper, apprentice, and trainee) employed on the contract during the payroll period has been paid the full weekly wages earned, without rebate, either directly or indirectly, and that no deductions have been made either directly or indirectly from the full wages earned, other than permissible deductions as set forth in Regulations, 29 CFR part 3;

(3) That each laborer or mechanic has been paid not less than the applicable wage rates and fringe benefits or cash equivalents for the classification of work performed, as specified in the applicable wage determination incorporated into the contract.

(C) The weekly submission of a properly executed certification set forth on the reverse side of Optional Form WH-347 shall satisfy the requirement for submission of the "Statement of Compliance" required by paragraph (a)(3)(ii)(B) of this section.

(D) The falsification of any of the above certifications may subject the contractor or subcontractor to civil or criminal prosecution under section 1001 of title 18 and section 231 of title 31 of the United States Code.

(iii) The contractor or subcontractor shall make the records required under paragraph (a)(3)(i) of this section available for inspection, copying, or transcription by authorized representatives of the ***CWSRF*** or the Department of Labor, and shall permit such representatives to interview employees during working hours on the job. If the contractor or subcontractor fails to submit the required records or to make them available, the Federal agency may, after written notice to the contractor, sponsor, applicant, or owner, take such action as may be necessary to cause the suspension of any further payment, advance, or guarantee of funds. Furthermore, failure to submit the required records upon request or to make such records available may be grounds for debarment action pursuant to 29 CFR 5.12.

(4) Apprentices and trainees--(i) Apprentices. Apprentices will be permitted to work at less than the predetermined rate for the work they performed when they are employed pursuant to and individually registered in a bona fide apprenticeship program registered with the U.S. Department of Labor, Employment and Training Administration, Office of Apprenticeship Training, Employer and Labor Services, or with a State Apprenticeship Agency recognized by the Office, or if a person is employed in his or her first 90 days of probationary employment as an apprentice in such an apprenticeship program, who is not individually registered in the program, but who has been certified by the Office of Apprenticeship Training, Employer and Labor Services or a State Apprenticeship Agency (where appropriate) to be eligible for probationary employment as an apprentice. The allowable ratio of apprentices to journeymen on the job site in any craft classification shall not be greater than the ratio permitted to the contractor as to the entire work force under the registered program. Any worker listed on a payroll at an apprentice wage rate, who is not registered or otherwise employed as stated above, shall be paid not less than the applicable wage rate on the wage determination for the classification of work actually performed. In addition, any apprentice performing work on the job site in excess of the ratio permitted under the registered program shall be paid not less than the applicable wage rate on the wage determination for the work actually performed. Where a contractor is performing construction on a project in a locality other than that in which its program is registered, the ratios and wage rates (expressed in percentages of the journeyman's hourly rate) specified in the contractor's or subcontractor's registered program shall be observed. Every apprentice must be paid at not less than the rate specified in the registered program for the apprentice's level of progress, expressed as a percentage of the journeymen hourly rate specified in the applicable wage determination. Apprentices shall be paid fringe benefits in accordance with the provisions of the apprenticeship program. If the apprenticeship program does not specify fringe benefits, apprentices must be paid the full amount of fringe benefits listed on the wage determination for the applicable classification. If the Administrator determines that a different practice prevails for the applicable apprentice classification, fringes shall be paid in accordance with that determination. In the event the Office of Apprenticeship Training, Employer and Labor Services, or a State Apprenticeship Agency recognized by the Office, withdraws approval of an apprenticeship program, the contractor will no longer be permitted to utilize apprentices at less than the applicable predetermined rate for the work performed until an acceptable program is approved.

(ii) Trainees. Except as provided in 29 CFR 5.16, trainees will not be permitted to work at less than the predetermined rate for the work performed unless they are employed pursuant to and individually registered in a program which has received prior approval, evidenced by formal certification by the U.S. Department of Labor, Employment and Training Administration. The ratio of trainees to journeymen on the job site shall not be greater than permitted under the plan approved by the Employment and Training Administration. Every trainee must be paid at not less than the rate specified in the approved program for the trainee's level of progress, expressed as a percentage of the journeyman hourly rate specified in the applicable wage determination.

Trainees shall be paid fringe benefits in accordance with the provisions of the trainee program. If the trainee program does not mention fringe benefits, trainees shall be paid the full amount of fringe benefits listed on the wage determination unless the Administrator of the Wage and Hour Division determines that there is an apprenticeship program associated with the corresponding journeyman wage rate on the wage determination which provides for less than full fringe benefits for apprentices. Any employee listed on the payroll at a trainee rate who is not registered and participating in a training plan approved by the Employment and Training Administration shall be paid not less than the applicable wage rate on the wage determination for the classification of work actually performed. In addition, any trainee performing work on the job site in excess of the ratio permitted under the registered program shall be paid not less than the applicable wage rate on the wage determination for the work actually performed. In the event the Employment and Training Administration withdraws approval of a training program, the contractor will no longer be permitted to utilize trainees at less than the applicable predetermined rate for the work performed until an acceptable program is approved.

(iii) Equal employment opportunity. The utilization of apprentices, trainees and journeymen under this part shall be in conformity with the equal employment opportunity requirements of Executive Order 11246, as amended, and 29 CFR part 30.

(5) Compliance with Copeland Act requirements. The contractor shall comply with the requirements of 29 CFR part 3, which are incorporated by reference in this contract.

(6) Subcontracts. The contractor or subcontractor shall insert in any subcontracts the clauses contained in 29 CFR 5.5(a)(1) through (10) and such other clauses as the (write in the name of the Federal agency) may by appropriate instructions require, and also a clause requiring the subcontractors to include these clauses in any lower tier subcontracts.
The prime contractor shall be responsible for the compliance by any subcontractor or lower tier subcontractor with all the contract clauses
in 29 CFR 5.5.

(7) Contract termination: debarment. A breach of the contract clauses in 29 CFR 5.5 may be grounds for termination of the contract, and for debarment as a contractor and a subcontractor as provided in 29 CFR 5.12.

(8) Compliance with Davis-Bacon and Related Act requirements. All rulings and interpretations of the Davis-Bacon and Related Acts contained in 29 CFR parts 1, 3, and 5 are herein incorporated by reference in this contract.

(9) Disputes concerning labor standards. Disputes arising out of the labor standards provisions of this contract shall not be subject to the general disputes clause of this contract. Such disputes shall be resolved in accordance with the procedures of the Department of Labor set forth in 29 CFR parts 5, 6, and 7. Disputes within the meaning of this clause include disputes between the contractor (or any of its subcontractors) and the contracting agency, the U.S. Department of Labor, or the employees or their representatives.

(10) Certification of eligibility. (i) By entering into this contract, the contractor certifies that neither it (nor he or she) nor any person or firm who has an interest in the contractor's firm is a person or firm ineligible to be awarded Government contracts by virtue of section 3(a) of the Davis-Bacon Act or 29 CFR 5.12(a)(1).

(ii) No part of this contract shall be subcontracted to any person or firm ineligible for award of a Government contract by virtue of
section 3(a) of the Davis-Bacon Act or 29 CFR 5.12(a)(1).

(iii) The penalty for making false statements is prescribed in the U.S. Criminal Code, 18 U.S.C. 1001.

(b) **Contract Work Hours and Safety Standards Act.** The following clauses set forth in paragraphs (b)(1), (2), (3), and (4) of this section in full in any contract in an amount in excess of $100,000 and subject to the overtime provisions of the Contract Work Hours and Safety Standards Act. These clauses shall be inserted in addition to the clauses required by Sec. 5.5(a) or 4.6 of part 4 of this title. As used in this paragraph, the terms laborers and mechanics include watchmen and guards.

(1) Overtime requirements. No contractor or subcontractor contracting for any part of the contract work which may require or involve the employment of laborers or mechanics shall require or permit any such laborer or mechanic in any workweek in which he or she is employed on such work to work in excess of forty hours in such workweek unless such laborer or mechanic receives compensation at a rate not less than one and one-half times the basic rate of pay for all hours worked in excess of forty hours in such workweek.

(2) Violation; liability for unpaid wages; liquidated damages. In the event of any violation of the clause set forth in paragraph (b)(1) of this section the contractor and any subcontractor responsible therefor shall be liable for the unpaid wages. In addition, such contractor and subcontractor shall be liable to the United States (in the case of work done under contract for the District of Columbia or a territory, to such District or to such territory), for liquidated damages. Such liquidated damages shall be computed

with respect to each individual laborer or mechanic, including watchmen and guards, employed in violation of the clause set forth in paragraph (b)(1) of this section, in the sum of $10 for each calendar day on which such individual was required or permitted to work in excess of the standard workweek of forty hours without payment of the overtime wages required by the clause set forth in paragraph (b)(1) of this section.

(3) Withholding for unpaid wages and liquidated damages. The ***Owner or the OWRB SRF*** shall upon its own action or upon written request of an authorized representative of the Department of Labor withhold or cause to be withheld, from any moneys payable on account of work performed by the contractor or subcontractor under any such contract or any other Federal contract with the same prime contractor, or any other federally-assisted contract subject to the Contract Work Hours and Safety Standards Act, which is held by the same prime contractor, such sums as may be determined to be necessary to satisfy any liabilities of such contractor or subcontractor for unpaid wages and liquidated damages as provided in the clause set forth in paragraph (b)(2) of this section.

(4) Subcontracts. The contractor or subcontractor shall insert in any subcontracts the clauses set forth in paragraph (b)(1) through (4) of this section and also a clause requiring the subcontractors to include these clauses in any lower tier subcontracts. The prime contractor shall be responsible for compliance by any subcontractor or lower tier subcontractor with the clauses set forth in paragraphs (b)(1) through (4) of this section.

(c) In addition to the clauses contained in paragraph (b), in any contract subject only to the Contract Work Hours and Safety Standards Act and not to any of the other statutes cited in Sec. 5.1, the Agency Head shall cause or require the contracting officer to insert a clause requiring that the contractor or subcontractor shall maintain payrolls and basic payroll records during the course of the work and shall preserve them for a period of three years from the completion of the contract for all laborers and mechanics, including guards and watchmen, working on the contract. Such records shall contain the name and address of each such employee, social security number, correct classifications, hourly rates of wages paid, daily and weekly number of hours worked, deductions made, and actual wages paid. Further, the Agency Head shall cause or require the contracting officer to insert in any such contract a clause providing that the records to be maintained under this paragraph shall be made available by the contractor or subcontractor for inspection, copying, or transcription by authorized representatives of the ***Owner or OWRB SRF*** and the Department of Labor, and the contractor or subcontractor will permit such representatives to interview employees during working hours on the job.

WAGE RATE REQUIREMENTS

Notwithstanding any other provision of law and in a manner consistent with other provisions, all laborers and mechanics employed by contractors and subcontractors on projects funded directly by or assisted in whole or in part with CWSRF funds shall be paid wages at rates not less than those prevailing on projects of a character similar in the locality as determined by the Secretary of Labor in accordance with subchapter IV of chapter 31 of title 40, United States Code. With respect to the labor standards specified in this section, the Secretary of Labor shall have the authority and functions set forth in Reorganization Plan Numbered 14 of 1950 (64 Stat. 1267; 5 U.S.C. App.) and section 3145 of title 40, United States Code.

See Appendix 1 for clarifying information.

AMERICAN IRON AND STEEL (BUY AMERICAN)

P.L 113-76, Consolidated Appropriations Act, 2014, "American Iron and Steel" Section 436.

(a)(1) None of the funds made available by a State water pollution control revolving fund as authorized by title VI of the Federal Water Pollution Control Act (33 U.S.C. 1381 et seq.) or made available by a drinking water treatment revolving loan fund as authorized by section 1452 of the Safe Drinking Water Act (42 U.S.C. 300j–12) shall be used for a project for the construction, alteration, maintenance, or repair of a public water system or treatment works unless all of the iron and steel products used in the project are produced in the United States.

(2) In this section, the term ''iron and steel products'' means the following products made primarily of iron or steel: lined or unlined pipes and fittings, manhole covers and other municipal castings, hydrants, tanks, flanges, pipe clamps and restraints, valves, structural steel, reinforced precast concrete, and construction materials.

(b) Subsection (a) shall not apply in any case or category of cases in which the Administrator of the Environmental Protection Agency (in this section referred to as the "Administrator") finds that—

(1) applying subsection (a) would be inconsistent with the public interest;
(2) iron and steel products are not produced in the United States in sufficient and reasonably available quantities and of a satisfactory quality; or
(3) inclusion of iron and steel products produced in the United States will increase the cost of the overall project by more than 25 percent.

(c) If the Administrator receives a request for a waiver under this section, the Administrator shall make available to the public on an informal basis a copy of the request and information available to the Administrator concerning the request, and shall allow for informal public input on the request for at least 15 days prior to making a finding based on the request. The Administrator shall make the request and accompanying information available by electronic means, including on the official public Internet Web site of the Environmental Protection Agency.

(d) This section shall be applied in a manner consistent with United States obligations under international agreements.

(e) The Administrator may retain up to 0.25 percent of the funds appropriated in this Act for the Clean and Drinking Water State Revolving Funds for carrying out the provisions described in subsection (a)(1) for management and oversight of the requirements of this section.

(f) This section does not apply with respect to a project if a State agency approves the engineering plans and specifications for the project, in that agency's capacity to approve such plans and specifications prior to a project requesting bids, prior to the date of the enactment of this Act.

Please see Appendices 2-4 for Waiver Information.

SYSTEM FOR AWARD MANAGMENT (SAM)

SAM registration is required for all SRF programs (CWSRF and DWSRF) applicants and Awardees (Entities, Prime Contractors, Subcontractors, Vendors) in order to be awarded contracts by the SRF Programs. SAM replaces Central Contractor Registration/Federal Agency Registration, Online Representations and Certifications Application, and Excluded Parties List System. Applicants and awardees are required to complete a one-time free registration to provide basic information relevant to procurement and financial transactions. Registrants must retain an active status to be eligible for SRF projects. New Applicants and Awardees can go to SAM.gov to complete the registration process.

Note: In order to register in SAM, a Data Universal Number System (DUNS) number will be required. DUNS number is a unique, non-indicative 9-digit identifier issued and maintained by Dun & Bradstreet (D&B) that verifies the existence of a business entity globally. D&B assigns DUNS numbers for each physical location of a business. All entities doing business with the U.S Government can receive a DUNS number FREE of charge and, under normal circumstances, within 1-2 business days when using D&B web form process at http://fedgov.dnb.com/webform.

OTHER SUPPLEMENTAL CONDITIONS

Disadvantaged Business Enterprises (DBE)

40 CFR 33.301 Contracting with disadvantaged business enterprises and labor surplus area firms.

The SRF loan recipient and subcontractors will take all necessary affirmative steps to assure that minority firms, women's business enterprises, and labor surplus area firms are used when possible.

DBE participation requirements apply to projects constructed with funds directly made available by the federal capitalization grant (equivalency projects).

(1) EPA and the State will negotiate a "Fair Share Objective" (which shall represent a percentage of DBE participation).

(2) When soliciting for a subcontractor (A/E or construction contractor), the loan recipient shall take the following six good faith efforts:

(A) Include qualified Small, DBE businesses on solicitation lists.

(B) Assure that Small, DBE businesses are solicited whenever they are potential sources.

(C) When economically feasible, divide total requirements into smaller tasks or quantities so as to permit maximum Small, DBE business participation.

(D) Where the requirements of the work permits, establish delivery schedules which will encourage participation by Small, DBE businesses.

(E) Use the services and assistance of the Small Business Administration, the Office of Minority Business Enterprise of the United States Department of Commerce, as appropriate.

(F) If any subcontracts are to be let, require the prime contractor or A/E to take the good faith efforts in (A) through (E) of this paragraph (2).

2. Affirmative Steps shall include:

(i) Placing qualified small and minority businesses and women's business enterprises on solicitation lists;

(ii) Assuring that small and minority businesses, and women's business enterprises are solicited whenever they are potential sources;

(iii) Dividing total requirements, when economically feasible, into smaller tasks or quantities to permit maximum participation by small and minority business, and women's business enterprises;

(iv) Establishing delivery schedules, where the requirement permits, which encourage participation by small and minority business, and women's business enterprises;

(v) Using the services and assistance of the Small Business Administration, and the Minority Business Development Agency of the Department of Commerce; and

(vi) Requiring the prime contractor, if subcontracts are to be let, to take the affirmative steps listed in paragraphs (e)(2)(i) through (v) of this section.

Completion Date

If not stated elsewhere in these specifications, the contractor shall complete work under this contract within calendar days. Time for completion shall begin on the 10th day after issuance of the work order, which shall consist of a written request by the engineer for the contractor to proceed with the construction of the project.

Contractor's Liability and Builders All Risk Insurance

The contractor shall furnish the following insurance when the contract is awarded:

(A) Workmen's Compensation: The contractor shall carry on his work in accordance with the requirements of the Workmen's Compensation Law of the State of Oklahoma, and shall not reject the provisions thereof during the life of the contract. A certificate of coverage must be returned with the contract.

(B) Public Liability and Property Damage: He shall also protect himself by liability reinsurance against any and all claims for damages to persons or property which may arise out of operations under this contract, whether such operations be by himself or a subcontractor or by anyone directly employed by either of them. Certificates of such insurance shall be file with the Owner and shall be subject to its approval as to adequacy of protection. The public liability insurance shall have limits of not less than $100,000/$300,000 or an amount to be determined by OWRB and Property Damage insurance of not less than $50,000/$100,000 or an amount to be determined by OWRB shall be carried by the contractor during the life of the contract. A certificate of such coverage must be returned with the contract.

(C) Builder's Risk: Provide Builders Risk Insurance only if called for in other sections of the specifications.

Bonds

All bonds are for the full value of the contract and must be issued by a surety company authorized by the Oklahoma Insurance Commission to do business in the State of Oklahoma. They will be required after the award of the contact.

Three bonds are required for all contracts with a value exceeding Fifty Thousand Dollars ($50,000.00) They are: (1.) Performance Bond to insure the completion of the work in accordance with the contract documents in the time stipulated; (2.) Maintenance Bond to provide for defects in construction or materials for a period of one (1) year from the date of acceptance of the completed work; and (3.) Statutory Bond to assure the Owner is protected from the action of subcontractors, suppliers and employees for unpaid debts of the contractor.

Irrevocable Letters of Credit may be used as a substitute for bonds on contracts exceeding Fifty Thousand Dollars ($50,000.00). The letters of credit must be issued by a financial institution insured by the Federal Deposit Insurance Corporation or the Federal Savings and Loan Insurance Corporation on forms obtained from the Owner.

PROJECT SIGN

- The general contractor shall erect and maintain for the life of the construction contract a suitable sign, 4' x 6' in size, and detailed hereon, lettered black on white background. Sign shall be professionally painted. Lettering to be appropriate size. No separate bid item. Sign shall be the general obligation of the Contractor.
- The OWRB logo is required on the project sign if the project is funded in part with CWSRF funds. The OWRB logo is available at http://www.owrb.ok.gov/about/index.php or may be provided directly by OWRB.
- Redwood Posts shall be 4" x 4" x 10' buried securely a minimum of 3 feet below ground.
- Sign face shall be constructed of ¾" x 4' x 6' – 5 ply Dura-plywood board & mounted to Posts with four (4) 5/8" x 6" Carriage Bolts.

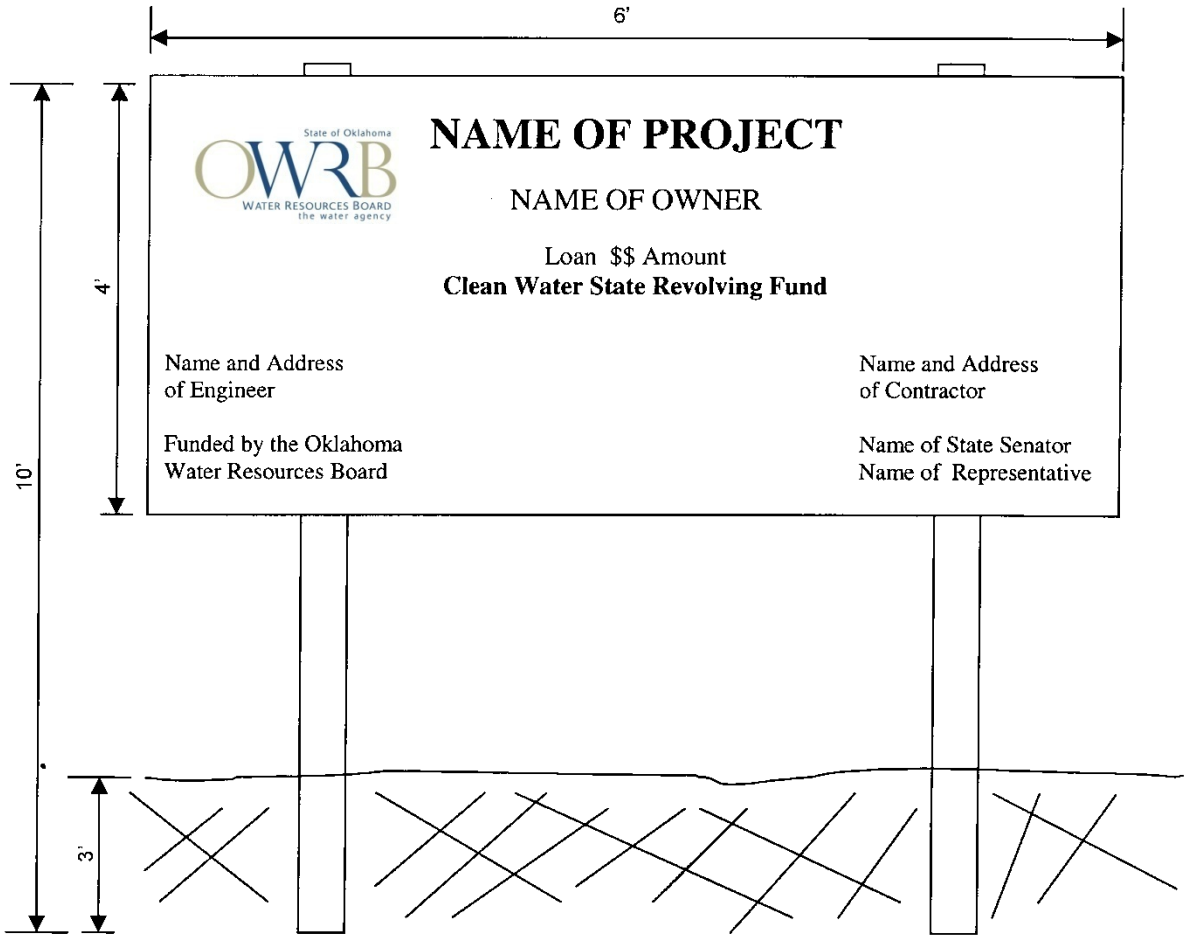

Appendix 1

Wage Rate Requirements

I. Requirements Under The Consolidated and Further Continuing Appropriations Act, 2013 (P.L. 113-6) For Subrecipients That Are Governmental and Not Governmental Entities:

The following terms and conditions specify how recipients will assist EPA in meeting its Davis-Bacon (DB) responsibilities when DB applies to EPA awards of financial assistance under the FY 2013 Continuing Resolution with respect to State recipients and subrecipients that are governmental entities, and for subrecipients that are not governmental entities. If a subrecipient has questions regarding when DB applies, obtaining the correct DB wage determinations, DB provisions, or compliance monitoring, it may contact the State recipient for guidance. If a State recipient needs guidance, the recipient may contact Dannell Brown at brown.dannell@epa.gov or at 214-665-7279 of EPA, Region VI Grants and Audit Management Branch for guidance. The recipient or subrecipient may also obtain additional guidance from DOL's website at http://www.dol.gov/whd/.

Under these terms and conditions, the Non-Governmental subrecipient must submit its proposed DB wage determinations to the State recipient for approval prior to including the wage determination in any solicitation, contract task orders, work assignments, or similar instruments to existing contractors.

1. Applicability of the Davis- Bacon (DB) prevailing wage requirements.

Under the FY 2013 Continuing Resolution, DB prevailing wage requirements apply to the construction, alteration, and repair of treatment works carried out in whole or in part with assistance made available by a State water pollution control revolving fund and to any construction project carried out in whole or in part by assistance made available by a drinking water treatment revolving loan fund. If a subrecipient encounters a unique situation at a site that presents uncertainties regarding DB applicability, the subrecipient must discuss the situation with the recipient State before authorizing work on that site.

2. Obtaining Wage Determinations.

(a) Subrecipients must obtain wage determinations for the locality or localities in which a covered activity subject to DB will take place at www.beta.sam.gov prior to issuing requests for bids, proposals, quotes or other methods for soliciting contracts (solicitation) for activities subject to DB. After the Subrecipient obtains its proposed wage determination, it must submit the wage determination to the assigned Financial Assistance Division Engineer, Oklahoma Water Resources Board, 3800 N. Classen Blvd, Oklahoma City, OK 73118. These wage determinations shall be incorporated into solicitations and any subsequent contracts. Prime contracts must contain a provision requiring that subcontractors follow the wage determination incorporated into the prime contract.

(i) While the solicitation remains open, the subrecipient shall monitor www.beta.sam.gov weekly to ensure that the wage determination contained in the solicitation remains current. The subrecipients shall amend the solicitation if DOL issues a modification more than 10 days prior to the closing date (i.e. bid opening) for the solicitation. If DOL modifies or supersedes the applicable wage determination less than 10 days prior to the closing date, the subrecipients may request a finding from the State recipient that there is not a reasonable time to notify interested contractors of the modification of the wage determination. The State recipient will provide a report of its findings to the subrecipient.

(ii) If the subrecipient does not award the contract within 90 days of the closure of the solicitation, any modifications or supersedes DOL makes to the wage determination contained in the solicitation shall be effective unless the State recipient, at the request of the subrecipient, obtains an extension of the 90 day period from DOL pursuant to 29 CFR 1.6(c)(3)(iv). The subrecipient shall monitor www.beta.sam.gov on a weekly basis if it does not award the contract within 90 days of closure of the solicitation to ensure that wage determinations contained in the solicitation remain current.

(b) If the subrecipient carries out activity subject to DB by issuing a task order, work assignment or similar instrument to an existing contractor (ordering instrument) rather than by publishing a solicitation, the subrecipient shall insert the appropriate DOL wage determination from www.beta.sam.gov into the ordering instrument.

(c) Subrecipients shall review all subcontracts subject to DB entered into by prime contractors to verify that the prime contractor has required its subcontractors to include the applicable wage determinations.

(d) As provided in 29 CFR 1.6(f), DOL may issue a revised wage determination applicable to a subrecipient's contract after the award of a contract or the issuance of an ordering instrument if DOL determines that the subrecipient has failed to incorporate a wage determination or has used a wage determination that clearly does not apply to the contract or ordering instrument. If this occurs, the subrecipient shall either terminate the contract or ordering instrument and issue a revised solicitation or ordering instrument or incorporate DOL's wage determination retroactive to the beginning of the contract or ordering instrument by change order. The subrecipient's contractor must be compensated for any increases in wages resulting from the use of DOL's revised wage determination.

3. Contract and Subcontract provisions.

(a) The Recipient shall insure that the subrecipient(s) shall insert in full in any contract in excess of $2,000 which is entered into for the actual construction, alteration and/or repair, including painting and decorating, of a treatment work under the CWSRF or a construction project under the DWSRF financed in whole or in part from Federal funds or in accordance with guarantees of a Federal agency or financed from funds obtained by pledge of any contract of a Federal agency to make a loan, grant or annual contribution (except where a different meaning is expressly indicated), and which is subject to the labor standards provisions of any of the acts listed in § 5.1 or the FY 2013 Continuing Resolution, the following clauses:

(1) Minimum wages.

(i) All laborers and mechanics employed or working upon the site of the work will be paid unconditionally and not less often than once a week, and without subsequent deduction or rebate on any account (except such payroll deductions as are permitted by regulations issued by the Secretary of Labor under the Copeland Act (29 CFR part 3)), the full amount of wages and bona fide fringe benefits (or cash equivalents thereof) due at time of payment computed at rates not less than those contained in the wage determination of the Secretary of Labor which is attached hereto and made a part hereof, regardless of any contractual relationship which may be alleged to exist between the contractor and such laborers and mechanics.

Contributions made or costs reasonably anticipated for bona fide fringe benefits under section 1(b)(2) of the Davis-Bacon Act on behalf of laborers or mechanics are considered wages paid to such laborers or mechanics, subject to the provisions of paragraph (a)(1)(iv) of this section; also, regular contributions made or costs incurred for more than a weekly period (but not less often than quarterly) under plans,

funds, or programs which cover the particular weekly period, are deemed to be constructively made or incurred during such weekly period. Such laborers and mechanics shall be paid the appropriate wage rate and fringe benefits on the wage determination for the classification of work actually performed, without regard to skill, except as provided in § 5.5(a)(4). Laborers or mechanics performing work in more than one classification may be compensated at the rate specified for each classification for the time actually worked therein: Provided that the employer's payroll records accurately set forth the time spent in each classification in which work is performed. The wage determination (including any additional classification and wage rates conformed under paragraph (a)(1)(ii) of this section) and the Davis-Bacon poster (WH-1321) shall be posted at all times by the contractor and its subcontractors at the site of the work in a prominent and accessible place where it can be easily seen by the workers.

Subrecipients may obtain wage determinations from the U.S. Department of Labor's web site, www.dol.gov.

(ii)(A) The subrecipient(s), on behalf of EPA, shall require that any class of laborers or mechanics, including helpers, which is not listed in the wage determination and which is to be employed under the contract shall be classified in conformance with the wage determination. The State award official shall approve a request for an additional classification and wage rate and fringe benefits therefore only when the following criteria have been met:

(1) The work to be performed by the classification requested is not performed by a classification in the wage determination; and

(2) The classification is utilized in the area by the construction industry; and

(3) The proposed wage rate, including any bona fide fringe benefits, bears a reasonable relationship to the wage rates contained in the wage determination.

(B) If the contractor and the laborers and mechanics to be employed in the classification (if known), or their representatives, and the subrecipient(s) agree on the classification and wage rate (including the amount designated for fringe benefits where appropriate), documentation of the action taken and the request, including the local wage determination shall be sent by the subrecipient (s) to the State award official. The State award official will transmit the request, to the Administrator of the Wage and Hour Division, Employment Standards Administration, U.S. Department of Labor, Washington, DC 20210 and to the EPA DB Regional Coordinator concurrently. The Administrator, or an authorized representative, will approve, modify, or disapprove every additional classification request within 30 days of receipt and so advise the State award official or will notify the State award official within the 30-day period that additional time is necessary.

(C) In the event the contractor, the laborers or mechanics to be employed in the classification or their representatives, and the subrecipient(s) do not agree on the proposed classification and wage rate (including the amount designated for fringe benefits, where appropriate), the award official shall refer the request and the local wage determination, including the views of all interested parties and the recommendation of the State award official, to the Administrator for determination. The request shall be sent to the EPA DB Regional Coordinator concurrently. The Administrator, or an authorized representative, will issue a determination within 30 days of receipt of the request and so advise the contracting officer or will notify the contracting officer within the 30-day period that additional time is necessary.

(D) The wage rate (including fringe benefits where appropriate) determined pursuant to paragraphs (a)(1)(ii)(B) or (C) of this section, shall be paid to all workers performing work in the classification under this contract from the first day on which work is performed in the classification.

(iii) Whenever the minimum wage rate prescribed in the contract for a class of laborers or mechanics includes a fringe benefit which is not expressed as an hourly rate, the contractor shall either pay the benefit as stated in the wage determination or shall pay another bona fide fringe benefit or an hourly cash equivalent thereof.

(iv) If the contractor does not make payments to a trustee or other third person, the contractor may consider as part of the wages of any laborer or mechanic the amount of any costs reasonably anticipated in providing bona fide fringe benefits under a plan or program, Provided, That the Secretary of Labor has found, upon the written request of the contractor, that the applicable standards of the Davis-Bacon Act have been met. The Secretary of Labor may require the contractor to set aside in a separate account assets for the meeting of obligations under the plan or program.

(2) Withholding. The subrecipient(s), shall upon written request of the EPA Award Official or an authorized representative of the Department of Labor, withhold or cause to be withheld from the contractor under this contract or any other Federal contract with the same prime contractor, or any other federally-assisted contract subject to Davis-Bacon prevailing wage requirements, which is held by the same prime contractor, so much of the accrued payments or advances as may be considered necessary to pay laborers and mechanics, including apprentices, trainees, and helpers, employed by the contractor or any subcontractor the full amount of wages required by the contract. In the event of failure to pay any laborer or mechanic, including any apprentice, trainee, or helper, employed or working on the site of the work, all or part of the wages required by the contract, the (Agency) may, after written notice to the contractor, sponsor, applicant, or owner, take such action as may be necessary to cause the suspension of any further payment, advance, or guarantee of funds until such violations have ceased.

(3) Payrolls and basic records.

(i) Payrolls and basic records relating thereto shall be maintained by the contractor during the course of the work and preserved for a period of three years thereafter for all laborers and mechanics working at the site of the work. Such records shall contain the name, address, and social security number of each such worker, his or her correct classification, hourly rates of wages paid (including rates of contributions or costs anticipated for bona fide fringe benefits or cash equivalents thereof of the types described in section 1(b)(2)(B) of the Davis-Bacon Act), daily and weekly number of hours worked, deductions made and actual wages paid. Whenever the Secretary of Labor has found under 29 CFR 5.5(a)(1)(iv) that the wages of any laborer or mechanic include the amount of any costs reasonably anticipated in providing benefits under a plan or program described in section 1(b)(2)(B) of the Davis-Bacon Act, the contractor shall maintain records which show that the commitment to provide such benefits is enforceable, that the plan or program is financially responsible, and that the plan or program has been communicated in writing to the laborers or mechanics affected, and records which show the costs anticipated or the actual cost incurred in providing such benefits. Contractors employing apprentices or trainees under approved programs shall maintain written evidence of the registration of apprenticeship programs and certification of trainee programs, the registration of the apprentices and trainees, and the ratios and wage rates prescribed in the applicable programs.

(ii)(A) The contractor shall submit weekly, for each week in which any contract work is performed, a copy of all payrolls to the subrecipient, that is, the entity that receives the sub-grant or loan from the State capitalization grant recipient. Such documentation shall be available on request of the State recipient or EPA. As to each payroll copy received, the subrecipient shall provide written confirmation in a form

satisfactory to the State indicating whether or not the project is in compliance with the requirements of 29 CFR 5.5(a)(1) based on the most recent payroll copies for the specified week. The payrolls shall set out accurately and completely all of the information required to be maintained under 29 CFR 5.5(a)(3)(i), except that full social security numbers and home addresses shall not be included on the weekly payrolls. Instead the payrolls shall only need to include an individually identifying number for each employee (e.g., the last four digits of the employee's social security number). The required weekly payroll information may be submitted in any form desired. Optional Form WH-347 is available for this purpose from the Wage and Hour Division Web site at http://www.dol.gov/whd/forms/wh347instr.htm or its successor site. The prime contractor is responsible for the submission of copies of payrolls by all subcontractors. Contractors and subcontractors shall maintain the full social security number and current address of each covered worker, and shall provide them upon request to the subrecipient(s) for transmission to the State or EPA if requested by EPA , the State, the contractor, or the Wage and Hour Division of the Department of Labor for purposes of an investigation or audit of compliance with prevailing wage requirements. It is not a violation of this section for a prime contractor to require a subcontractor to provide addresses and social security numbers to the prime contractor for its own records, without weekly submission to the subrecipient(s).

(B) Each payroll submitted shall be accompanied by a "Statement of Compliance" signed by the contractor or subcontractor or his or her agent who pays or supervises the payment of the persons employed under the contract and shall certify the following:

(1) That the payroll for the payroll period contains the information required to be provided under § 5.5 (a)(3)(ii) of Regulations, 29 CFR part 5, the appropriate information is being maintained under § 5.5 (a)(3)(i) of Regulations, 29 CFR part 5, and that such information is correct and complete;

(2) That each laborer or mechanic (including each helper, apprentice, and trainee) employed on the contract during the payroll period has been paid the full weekly wages earned, without rebate, either directly or indirectly, and that no deductions have been made either directly or indirectly from the full wages earned, other than permissible deductions as set forth in Regulations, 29 CFR part 3;

(3) That each laborer or mechanic has been paid not less than the applicable wage rates and fringe benefits or cash equivalents for the classification of work performed, as specified in the applicable wage determination incorporated into the contract.

(C) The weekly submission of a properly executed certification set forth on the reverse side of Optional Form WH-347 shall satisfy the requirement for submission of the "Statement of Compliance" required by paragraph (a)(3)(ii)(B) of this section.

(D) The falsification of any of the above certifications may subject the contractor or subcontractor to civil or criminal prosecution under section 1001 of title 18 and section 231 of title 31 of the United States Code.

(iii) The contractor or subcontractor shall make the records required under paragraph (a)(3)(i) of this section available for inspection, copying, or transcription by authorized representatives of the State, EPA or the Department of Labor, and shall permit such representatives to interview employees during working hours on the job. If the contractor or subcontractor fails to submit the required records or to make them available, the Federal agency or State may, after written notice to the contractor, sponsor, applicant, or owner, take such action as may be necessary to cause the suspension of any further payment, advance, or guarantee of funds. Furthermore, failure to submit the required records upon request or to make such records available may be grounds for debarment action pursuant to 29 CFR 5.12.

(4) Apprentices and trainees

(i) Apprentices. Apprentices will be permitted to work at less than the predetermined rate for the work they performed when they are employed pursuant to and individually registered in a bona fide apprenticeship program registered with the U.S. Department of Labor, Employment and Training Administration, Office of Apprenticeship Training, Employer and Labor Services, or with a State Apprenticeship Agency recognized by the Office, or if a person is employed in his or her first 90 days of probationary employment as an apprentice in such an apprenticeship program, who is not individually registered in the program, but who has been certified by the Office of Apprenticeship Training, Employer and Labor Services or a State Apprenticeship Agency (where appropriate) to be eligible for probationary employment as an apprentice. The allowable ratio of apprentices to journeymen on the job site in any craft classification shall not be greater than the ratio permitted to the contractor as to the entire work force under the registered program. Any worker listed on a payroll at an apprentice wage rate, who is not registered or otherwise employed as stated above, shall be paid not less than the applicable wage rate on the wage determination for the classification of work actually performed. In addition, any apprentice performing work on the job site in excess of the ratio permitted under the registered program shall be paid not less than the applicable wage rate on the wage determination for the work actually performed. Where a contractor is performing construction on a project in a locality other than that in which its program is registered, the ratios and wage rates (expressed in percentages of the journeyman's hourly rate) specified in the contractor's or subcontractor's registered program shall be observed. Every apprentice must be paid at not less than the rate specified in the registered program for the apprentice's level of progress, expressed as a percentage of the journeymen hourly rate specified in the applicable wage determination. Apprentices shall be paid fringe benefits in accordance with the provisions of the apprenticeship program. If the apprenticeship program does not specify fringe benefits, apprentices must be paid the full amount of fringe benefits listed on the wage determination for the applicable classification. If the Administrator determines that a different practice prevails for the applicable apprentice classification, fringes shall be paid in accordance with that determination. In the event the Office of Apprenticeship Training, Employer and Labor Services, or a State Apprenticeship Agency recognized by the Office, withdraws approval of an apprenticeship program, the contractor will no longer be permitted to utilize apprentices at less than the applicable predetermined rate for the work performed until an acceptable program is approved.

(ii) Trainees. Except as provided in 29 CFR 5.16, trainees will not be permitted to work at less than the predetermined rate for the work performed unless they are employed pursuant to and individually registered in a program which has received prior approval, evidenced by formal certification by the U.S. Department of Labor, Employment and Training Administration. The ratio of trainees to journeymen on the job site shall not be greater than permitted under the plan approved by the Employment and Training Administration. Every trainee must be paid at not less than the rate specified in the approved program for the trainee's level of progress, expressed as a percentage of the journeyman hourly rate specified in the applicable wage determination. Trainees shall be paid fringe benefits in accordance with the provisions of the trainee program. If the trainee program does not mention fringe benefits, trainees shall be paid the full amount of fringe benefits listed on the wage determination unless the Administrator of the Wage and Hour Division determines that there is an apprenticeship program associated with the corresponding journeyman wage rate on the wage determination which provides for less than full fringe benefits for apprentices. Any employee listed on the payroll at a trainee rate who is not registered and participating in a training plan approved by the Employment and Training Administration shall be paid not less than the applicable wage rate on the wage determination for the classification of work actually performed. In addition, any trainee performing work on the job site in excess of the ratio permitted under the registered program shall be paid not less than the applicable wage rate on the wage determination for the work actually performed. In the event the Employment and Training Administration withdraws approval of a training program, the contractor will no longer be permitted to utilize trainees at less than the applicable predetermined rate for the work performed until an acceptable program is approved.

(iii) Equal employment opportunity. The utilization of apprentices, trainees and journeymen under this part shall be in conformity with the equal employment opportunity requirements of Executive Order 11246, as amended and 29 CFR part 30.

(5) Compliance with Copeland Act requirements. The contractor shall comply with the requirements of 29 CFR part 3, which are incorporated by reference in this contract.

(6) Subcontracts. The contractor or subcontractor shall insert in any subcontracts the clauses contained in 29 CFR 5.5(a)(1) through (10) and such other clauses as the EPA determines may by appropriate, and also a clause requiring the subcontractors to include these clauses in any lower tier subcontracts. The prime contractor shall be responsible for the compliance by any subcontractor or lower tier subcontractor with all the contract clauses in 29 CFR 5.5.

(7) Contract termination; debarment. A breach of the contract clauses in 29 CFR 5.5 may be grounds for termination of the contract, and for debarment as a contractor and a subcontractor as provided in 29 CFR 5.12.

(8) Compliance with Davis-Bacon and Related Act requirements. All rulings and interpretations of the Davis-Bacon and Related Acts contained in 29 CFR parts 1, 3, and 5 are herein incorporated by reference in this contract.

(9) Disputes concerning labor standards. Disputes arising out of the labor standards provisions of this contract shall not be subject to the general disputes clause of this contract. Such disputes shall be resolved in accordance with the procedures of the Department of Labor set forth in 29 CFR parts 5, 6, and 7. Disputes within the meaning of this clause include disputes between the contractor (or any of its subcontractors) and Subrecipient(s), State, EPA, the U.S. Department of Labor, or the employees or their representatives.

(10) Certification of eligibility.

(i) By entering into this contract, the contractor certifies that neither it (nor he or she) nor any person or firm who has an interest in the contractor's firm is a person or firm ineligible to be awarded Government contracts by virtue of section 3(a) of the Davis-Bacon Act or 29 CFR 5.12(a)(1).

(ii) No part of this contract shall be subcontracted to any person or firm ineligible for award of a Government contract by virtue of section 3(a) of the Davis-Bacon Act or 29 CFR 5.12(a)(1).

(iii) The penalty for making false statements is prescribed in the U.S. Criminal Code, 18 U.S.C. 1001.

4. Contract Provision for Contracts in Excess of $100,000.

(a) Contract Work Hours and Safety Standards Act. The subrecipient shall insert the following clauses set forth in paragraphs (a)(1), (2), (3), and (4) of this section in full in any contract in an amount in excess of $100,000 and subject to the overtime provisions of the Contract Work Hours and Safety Standards Act. These clauses shall be inserted in addition to the clauses required by Item 3, above or 29 CFR 4.6. As used in this paragraph, the terms laborers and mechanics include watchmen and guards.

(1) Overtime requirements. No contractor or subcontractor contracting for any part of the contract work which may require or involve the employment of laborers or mechanics shall require or permit any such laborer or mechanic in any workweek in which he or she is employed on such work to work in excess of forty hours in such workweek unless such laborer or mechanic receives compensation at a rate not less

than one and one-half times the basic rate of pay for all hours worked in excess of forty hours in such workweek.

(2) Violation; liability for unpaid wages; liquidated damages. In the event of any violation of the clause set forth in paragraph (a)(1) of this section the contractor and any subcontractor responsible therefore shall be liable for the unpaid wages. In addition, such contractor and subcontractor shall be liable to the United States (in the case of work done under contract for the District of Columbia or a territory, to such District or to such territory), for liquidated damages. Such liquidated damages shall be computed with respect to each individual laborer or mechanic, including watchmen and guards, employed in violation of the clause set forth in paragraph (a)(1) of this section, in the sum of $10 for each calendar day on which such individual was required or permitted to work in excess of the standard workweek of forty hours without payment of the overtime wages required by the clause set forth in paragraph (a)(1) of this section.

(3) Withholding for unpaid wages and liquidated damages. The subrecipient**,** upon written request of the EPA Award Official or an authorized representative of the Department of Labor, shall withhold or cause to be withheld, from any moneys payable on account of work performed by the contractor or subcontractor under any such contract or any other Federal contract with the same prime contractor, or any other federally-assisted contract subject to the Contract Work Hours and Safety Standards Act, which is held by the same prime contractor, such sums as may be determined to be necessary to satisfy any liabilities of such contractor or subcontractor for unpaid wages and liquidated damages as provided in the clause set forth in paragraph (b)(2) of this section.

(4) Subcontracts. The contractor or subcontractor shall insert in any subcontracts the clauses set forth in paragraph (a)(1) through (4) of this section and also a clause requiring the subcontractors to include these clauses in any lower tier subcontracts. The prime contractor shall be responsible for compliance by any subcontractor or lower tier subcontractor with the clauses set forth in paragraphs (a)(1) through (4) of this section.

(b) In addition to the clauses contained in Item 3, above, in any contract subject only to the Contract Work Hours and Safety Standards Act and not to any of the other statutes cited in 29 CFR 5.1, the Subrecipient shall insert a clause requiring that the contractor or subcontractor shall maintain payrolls and basic payroll records during the course of the work and shall preserve them for a period of three years from the completion of the contract for all laborers and mechanics, including guards and watchmen, working on the contract. Such records shall contain the name and address of each such employee, social security number, correct classifications, hourly rates of wages paid, daily and weekly number of hours worked, deductions made, and actual wages paid. Further, the Subrecipient shall insert in any such contract a clause providing hat the records to be maintained under this paragraph shall be made available by the contractor or subcontractor for inspection, copying, or transcription by authorized representatives of the (write the name of agency) and the Department of Labor, and the contractor or subcontractor will permit such representatives to interview employees during working hours on the job.

5. Compliance Verification

(a) The subrecipient shall periodically interview a sufficient number of employees entitled to DB prevailing wages (covered employees) to verify that contractors or subcontractors are paying the appropriate wage rates. As provided in 29 CFR 5.6(a)(6), all interviews must be conducted in confidence. The subrecipient must use Standard Form 1445 (SF 1445) or equivalent documentation to memorialize the interviews. Copies of the SF 1445 are available from EPA on request.

(b) The subrecipient shall establish and follow an interview schedule based on its assessment of the risks of noncompliance with DB posed by contractors or subcontractors and the duration of the contract or subcontract. Subrecipients must conduct more frequent interviews if the initial interviews or other information indicated that there is a risk that the contractor or subcontractor is not complying with DB. Subrecipients shall immediately conduct interviews in response to an alleged violation of the prevailing wage requirements. All interviews shall be conducted in confidence."

(c) The subrecipient shall periodically conduct spot checks of a representative sample of weekly payroll data to verify that contractors or subcontractors are paying the appropriate wage rates. The subrecipient shall establish and follow a spot check schedule based on its assessment of the risks of noncompliance with DB posed by contractors or subcontractors and the duration of the contract or subcontract. At a minimum, if practicable, the subrecipient should spot check payroll data within two weeks of each contractor or subcontractor's submission of its initial payroll data and two weeks prior to the completion date the contract or subcontract . Subrecipients must conduct more frequent spot checks if the initial spot check or other information indicates that there is a risk that the contractor or subcontractor is not complying with DB. In addition, during the examinations the subrecipient shall verify evidence of fringe benefit plans and payments there under by contractors and subcontractors who claim credit for fringe benefit contributions.

(d) The subrecipient shall periodically review contractors and subcontractors use of apprentices and trainees to verify registration and certification with respect to apprenticeship and training programs approved by either the U.S Department of Labor or a state, as appropriate, and that contractors and subcontractors are not using disproportionate numbers of, laborers, trainees and apprentices. These reviews shall be conducted in accordance with the schedules for spot checks and interviews described in Item 5(b) and (c) above.

(e) Subrecipients must immediately report potential violations of the DB prevailing wage requirements to the EPA DB contact listed above and to the appropriate DOL Wage and Hour District Office at 405-231-4158.

Appendix 2

Step-By-Step Waiver Process Related to P.L. 113-76, Consolidated Appropriation Act, 2014, "American Iron and Steel"

Application by Assistance Recipient

Each local entity that receives SRF water infrastructure financial assistance is required by section 436 of the Act to use American made iron and steel products in the construction of its project. However, the recipient may request a waiver. Until a waiver is granted by EPA, the AIS requirement stands, except as noted above with respect to municipalities covered by international agreements.

The waiver process begins with the SRF assistance recipient. In order to fulfill the AIS requirement, the assistance recipient must in good faith design the project (where applicable) and solicit bids for construction with American made iron and steel products. It is essential that the assistance recipient include the AIS terms in any request for proposals or solicitations for bids, and in all contracts. The assistance recipient may receive a waiver at any point before, during, or after the bid process, if one or more of three conditions is met:

1. Applying the American Iron and Steel requirements of the Act would be inconsistent with the public interest;
2. Iron and steel products are not produced in the United States in sufficient and reasonably available quantities and of a satisfactory quality; or
3. Inclusion of iron and steel products produced in the United States will increase the cost of the overall project by more than 25 percent.

Proper and sufficient documentation must be provided by the assistance recipient. A checklist detailing the types of information required for a waiver to be processed is attached as Appendix 3.

Additionally, it is strongly encouraged that assistance recipients hold pre-bid conferences with potential bidders. A pre-bid conference can help to identify iron and steel products needed to complete the project as described in the plans and specifications that may not be available from domestic sources. It may also identify the need to seek a waiver prior to bid, and can help inform the recipient on compliance options.

In order to apply for a project waiver, the assistance recipient should email the request in the form of a Word document (.doc) to the State SRF program. It is strongly recommended that the State designate a single person for all AIS communications. The State SRF designee will review the application for the waiver and determine whether the necessary information has been included. Once the waiver application is complete, the State designee will forward the application to either of two email addresses. For CWSRF waiver requests, please send the application to: cwsrfwaiver@epa.gov. For DWSRF waiver requests, please send the application to: dwsrfwaiver@epa.gov.

Evaluation by EPA

After receiving an application for waiver of the AIS requirements, EPA Headquarters will publish the request on its website for 15 days and receive informal comment. EPA Headquarters will then use the checklist in Appendix 3 to determine whether the application properly and adequately documents and justifies the statutory basis cited for the waiver – that it is quantitatively and qualitatively sufficient – and to determine whether or not to grant the waiver.

In the event that EPA finds that adequate documentation and justification has been submitted, the Administrator may grant a waiver to the assistance recipient. EPA will notify the State designee that a waiver request has been approved or denied as soon as such a decision has been made. Granting such a waiver is a three-step process:

1. Posting – After receiving an application for a waiver, EPA is required to publish the application and all material submitted with the application on EPA's website for 15 days. During that period, the public will have the opportunity to review the request and provide informal comment to EPA. The website can be found at: http://water.epa.gov/grants_funding/aisrequirement.cfm

2. Evaluation – After receiving an application for waiver of the AIS requirements, EPA Headquarters will use the checklist in Appendix 3 to determine whether the application properly and adequately documents and justifies the statutory basis cited for the waiver – that it is quantitatively and qualitatively sufficient – and to determine whether or not to grant the waiver.

3. Signature of waiver approval by the Administrator or another agency official with delegated authority – As soon as the waiver is signed and dated, EPA will notify the State SRF program, and post the signed waiver on our website. The assistance recipient should keep a copy of the signed waiver in its project files.

Public Interest Waivers

EPA has the authority to issue public interest waivers. Evaluation of a public interest waiver request may be more complicated than that of other waiver requests so they may take more time than other waiver requests for a decision to be made. An example of a public interest waiver that might be issued could be for a community that has standardized on a particular type or manufacturer of a valve because of its performance to meet their specifications. Switching to an alternative valve may require staff to be trained on the new equipment and additional spare parts would need to be purchased and stocked, existing valves may need to be unnecessarily replaced, and portions of the system may need to be redesigned. Therefore, requiring the community to install an alternative valve would be inconsistent with public interest. EPA also has the authority to issue a public interest waiver that covers categories of products that might apply to all projects.

EPA reserves the right to issue national waivers that may apply to particular classes of assistance recipients, particular classes of projects, or particular categories of iron or steel products. EPA may develop national or (US geographic) regional categorical waivers through the identification of similar circumstances in the detailed justifications presented to EPA in a waiver request or requests. EPA may issue a national waiver based on policy decisions regarding the public's interest or a determination that a particular item is not produced domestically in reasonably available quantities or of a sufficient quality. In such cases, EPA may determine it is necessary to issue a national waiver.

If you have any questions concerning the contents of this memorandum, you may contact us, or have your staff contact 800-887-6063.

Appendix 3: Information Checklist for Waiver Request

Related to P.L. 113-76, Consolidated Appropriation Act, 2014, "American Iron and Steel"

The purpose of this checklist is to help ensure that all appropriate and necessary information is submitted to EPA. EPA recommends that States review this checklist carefully and provide all appropriate information to EPA. This checklist is for informational purposes only and does not need to be included as part of a waiver application.

Items	✓	Notes
General • Waiver request includes the following information: — Description of the foreign and domestic construction materials — Unit of measure — Quantity — Price — Time of delivery or availability — Location of the construction project — Name and address of the proposed supplier — A detailed justification for the use of foreign construction materials • Waiver request was submitted according to the instructions in the memorandum • Assistance recipient made a good faith effort to solicit bids for domestic iron and steel products, as demonstrated by language in requests for proposals, contracts, and communications with the prime contractor		
Cost Waiver Requests • Waiver request includes the following information: — Comparison of overall cost of project with domestic iron and steel products to overall cost of project with foreign iron and steel products — Relevant excerpts from the bid documents used by the contractors to complete the comparison — Supporting documentation indicating that the contractor made a reasonable survey of the market, such as a description of the process for identifying suppliers and a list of contacted suppliers		
Availability Waiver Requests • Waiver request includes the following supporting documentation necessary to demonstrate the availability, quantity, and/or quality of the materials for which the waiver is requested: — Supplier information or pricing information from a reasonable number of domestic suppliers indicating availability/delivery date for construction materials — Documentation of the assistance recipient's efforts to find available domestic sources, such as a description of the process for identifying suppliers and a list of contacted suppliers. — Project schedule — Relevant excerpts from project plans, specifications, and permits indicating the required quantity and quality of construction materials • Waiver request includes a statement from the prime contractor and/or supplier confirming the non-availability of the domestic construction materials for which the waiver is sought • Has the State received other waiver requests for the materials described in this waiver request, for comparable projects?		

Appendix 4: HQ Review Checklist for Waiver Request
Related to P.L. 113-76, Consolidated Appropriation Act, 2014, "American Iron and Steel"

Instructions: To be completed by EPA. Review all waiver requests using the questions in the checklist, and mark the appropriate box as Yes, No or N/A. Marks that fall inside the shaded boxes may be grounds for denying the waiver. If none of your review markings fall into a shaded box, the waiver is eligible for approval if it indicates that one or more of the following conditions applies to the domestic product for which the waiver is sought:

1. The iron and/or steel products are not produced in the United States in sufficient and reasonably available quantities and of a satisfactory quality.
2. The inclusion of iron and/or steel products produced in the United States will increase the cost of the overall project by more than 25 percent.

Review Items	Yes	No	N/A	Comments
Cost Waiver Requests • Does the waiver request include the following information? — Comparison of overall cost of project with domestic iron and steel products to overall cost of project with foreign iron and steel products				
— Relevant excerpts from the bid documents used by the contractors to complete the comparison — A sufficient number of bid documents or pricing information from domestic sources to constitute a reasonable survey of the market				
• Does the Total Domestic Project exceed the Total Foreign Project Cost by more than 25%?				
Availability Waiver Requests • Does the waiver request include supporting documentation sufficient to show the availability, quantity, and/or quality of the iron and/or steel product for which the waiver is requested? — Supplier information or other documentation indicating availability/delivery date for materials — Project schedule — Relevant excerpts from project plans, specifications, and permits indicating the required quantity and quality of materials				
• Does supporting documentation provide sufficient evidence that the contractors made a reasonable effort to locate domestic suppliers of materials, such as a description of the process for identifying suppliers and a list of contacted suppliers?				
• Based on the materials delivery/availability date indicated in the supporting documentation, will the materials be unavailable when they are needed according to the project schedule? (By item, list schedule date and domestic delivery quote date or other relevant information)				
• Is EPA aware of any other evidence indicating the non-availability of the materials for which the waiver is requested? Examples include: — Multiple waiver requests for the materials described in this waiver request, for comparable projects in the same State — Multiple waiver requests for the materials described in this waiver request, for comparable projects in other States — Correspondence with construction trade associations indicating the non-availability of the materials				
• Are the available domestic materials indicated in the bid documents of inadequate quality compared those required by the project plans, specifications, and/or permits?				

SHAWNEE MUNICIPAL AUTHORITY

WASTEWATER SYSTEM IMPROVEMENTS

CONTRACT DOCUMENTS & SPECIFICATIONS
VOLUME 2 OF 8
DIVISION 01 TO DIVISION 13

IN COOPERATION WITH

OKLAHOMA WATER RESOURCES BOARD

OWRB PROJECT # ORF-20-0018-CWA

ISSUED FOR BIDDING

City of Shawnee
OKLAHOMA

WALL ENGINEERING

Wall Engineering Project # SHN-20-01
WE Firm Certificate of Authorization #5413

THIS PAGE INTENTIONALLY LEFT BLANK FOR DOUBLE SIDED PRINTING

SHAWNEE MUNICIPAL AUTHORITY
WASTEWATER SYSTEM IMPROVEMENTS

ISSUED: FOR CONSTRUCTION

June 2022

The seal below covers the following sections of the Contract Documents:

Division 0, Division 1, Division 2, Division 3, Division 5, Division 9, Division 10, Division 13, Division 31, Division 32, Division 33, Division 40, Division 41, Division 43, Division 46, Division 47



THIS PAGE INTENTIONALLY LEFT BLANK FOR DOUBLE SIDED PRINTING

SHAWNEE MUNICIPAL AUTHORITY
WASTEWATER SYSTEM IMPROVEMENTS

ISSUED: FOR CONSTRUCTION

June 2022

The seal below covers the following sections of the Contract Documents:

Division 26, Division 27, Division 28



THIS PAGE INTENTIONALLY LEFT BLANK FOR DOUBLE SIDED PRINTING

SHAWNEE MUNICIPAL AUTHORITY
WASTEWATER SYSTEM IMPROVEMENTS

ISSUED: FOR CONSTRUCTION

JUNE 2022

The seal below covers the following sections of the Contract Documents:

Division 23



THIS PAGE INTENTIONALLY LEFT BLANK FOR DOUBLE SIDED PRINTING

CONTRACT DOCUMENTS
TABLE OF CONTENTS

VOLUME 1 OF 8

DIVISION 00 – PROCUREMENT AND CONTRACTING DOCUMENTS

00_01_01.01	Project Title Page
00_01_07.01	Seals Page, Civil
00_01_07.02	Seals Page, Electrical
00_01_07.03	Seals Page, Mechanical
00_01_10	Table of Contents
00_01_19	Prequalified Contractors
00_01_21	Requirements for Bidders

PROCUREMENT REQUIREMENTS

00_11_13	Advertisement for Bids
00_21_13	Instruction to Bidders
00_41_13	Bid Form
00_41_13	Bid Form - Attachment "A" - Bid Summary Sheet
00_41_16	List of Manufacturers
00_41_19	List of Subcontractors
00_41_16	List of Manufacturers
00_41_19	List of Subcontractors
00_41_22	Special Materials Cost Increases
00_43_13	Bid Security Form
00_45_19.13	Noncollusion Affidavit
00_45_21	Business Relationship Affidavit
00_45_17.13	Payroll Affidavit

OWRB CWSRF SPECIAL PROCUREMENT & PROJECT REQUIREMENTS

00_46_47.39	Certification of Labor Standards
00_46_47.19	DBE Guidance
00_46_47.23	DBE Subcontractor Participation Form
00_46_47.26	DBE Subcontractor Performance Form
00_46_47.29	DBE Subcontractor Utilization Form
00_46_47.33	American Iron & Steel Certification
00_46_47.36	Bidder Statements
00_46_47.39	Wage Rates – Building
00_46_47.41	Wage Rates – Heavy

CONTRACTING REQUIREMENTS

00_51_00	Notice of Award
00_52_13	Agreement - Stipulated Price
00_55_00	Notice to Proceed

PROJECT FORMS

00_61_13.13	Performance Bond Form
00_61_13.16	Payment Bond Form
00_61_20	Maintenance Bond Form
00_62_16	Certificate of Insurance
00_62_76	Application for Payment Form
00_62_76.13	Invoice Affidavit Form

THIS PAGE INTENTIONALLY LEFT BLANK FOR DOUBLE SIDED PRINTING

CONTRACT DOCUMENTS
TABLE OF CONTENTS

00_63_13 Request for Information
00_63_36 Field Order Form
00_63_49 Work Change Directive Form
00_63_63 Change Order Form
00_63_67 Attorney Certificate of Approval
00_65_16 Substantial Completion Form
00_65_19.24 Acceptability of Work Form
00_65_19.29 Release of Claimants Form
00_65_19.32 Property Owner Release Form

CONDITIONS OF THE CONTRACT
00_72_13 General Conditions - Stipulated Sum
00_73_00 Supplementary Conditions
00_73_02 OWRB Supplemental Conditions

VOLUME 2 OF 8

DIVISION 01 – GENERAL REQUIREMENTS
01_00_01 Basic Requirements
01_11_01 Sequence of Construction
01_29_00 Payment Procedures
01_32_34 Photographic & Video Log
01_33_01 General Submittal Requirements
01_33_02 Pre-Bid Equipment Submittal Requirements
01_36_00 Pipe Laying Prove-out
01_43_24 System Integrator Prequalification
01_45_24 Special Tests & Inspections
01_45_29 Testing Laboratory Services
01_56_17 Dust Control
01_75_23 Testing, Training & Facility Startup
01_78_23 Operation and Maintenance Data
01_78_34 Warranties and Bonds
01_91_01 Facility Commissioning

DIVISION 02 – EXISTING CONDITIONS
02_21_20 Subsurface Utility Engineering
02_30_00 Subsurface Investigation
02_41_00 Demolition

DIVISION 03 – CONCRETE
03_11_00 Concrete Formwork
03_15_20 Concrete Joints & Embedded Items
03_20_00 Concrete Reinforcement
03_21_18 Epoxy Bonding in Concrete
03_30_00 Cast-in-place Concrete
03_35_00 Concrete Finishes
03_60_00 Grouting
03_60_01 Basin Bottom Grout
03_70_00 Mass Concrete

THIS PAGE INTENTIONALLY LEFT BLANK FOR DOUBLE SIDED PRINTING

CONTRACT DOCUMENTS
TABLE OF CONTENTS

DIVISION 05 – METALS
05_05_20 Anchorages
05_05_25 Mechanical Anchoring
05_50_00.01 Miscellaneous Metal Fabrications
05_51_00.13 Metal Ladders, Platforms & Stairs
05_52_00 Metal Railings
05_53_00.13 Metal Grates & Cover Plates

DIVISION 9 – FINISHES
09_91_00.13 Painting of Treatment Plants

DIVISION 10 - SPECIALTIES
10_44_16 Fire Extinguishers

DIVISION 13 – SPECIAL CONSTRUCTION
13_34_19 Metal Building Systems

VOLUME 3 OF 8

DIVISION 23 – HEATING, VENTILATING & AIR CONDITIONING (HVAC)
23_00_00 Mechanical General Requirements

DIVISION 26 – ELECTRICAL
26_05_00 Common Work Results for Electrical
26_05_20 Hazardous Classified Area Construction
26_06_00 Grounding & Bonding
26_07_00 Hangers & Supports
26_07_50 Identification for Electrical Systems
26_12_30 600-Volt or Less Wires & Cables
26_12_50 Fiber Optic Cable & Appurtenances
26_13_00 Conduits
26_13_30 Duct Banks
26_13_40 Boxes
26_13_60 Wireway
26_14_00 Wiring Devices
26_15_00 Low Voltage Wire Connections
26_21_00 Utility Coordination
26_26_20 Variable Frequency Drives 0.50-50 Horsepower
26_26_50 Reduced Harmonic Variable Frequency Drives
26_27_20 Dry-Type Transformers
26_28_50 Surge Protection Devices
26_29_00 Electrical Power Monitoring
26_30_50 Electrical System Studies
26_31_21.50 600KW Generator
26_32_13.60 200A Automatic Transfer Switch
26_32_13.10 15KW Generator
26_32_13.20 1750KW Generator
26_32_13.30 150A ATS

THIS PAGE INTENTIONALLY LEFT BLANK FOR DOUBLE SIDED PRINTING

CONTRACT DOCUMENTS
TABLE OF CONTENTS

26_32_13.40 4000A ATS
26_41_10 Disconnect Switches
26_41_20 Low Voltage Molded Case Circuit Breakers
26_41_30 Low Voltage Insulated Case Circuit Breakers
26_42_20 Motor Starters
26_44_10 Group Mounted Circuit Breaker Switchboards
26_44_50 Panelboards
26_47_20 Package Power Supply Center
25_51_00 Lighting LED Luminaires
26_67_00 Lighting Protection
26_95_00 Field Electrical Acceptance Tests

DIVISION 27 – PROCESS CONTROL & INSTRUMENTATION SYSTEMS
27_05_00 Common Work Results for Process Control & Instrumentation Systems
27_10_00 Control Strategies
27_30_60 Level Measurement Ultrasonic
27_30_20 Flow Measurement Magnetic Flowmeters
27_34_00 Analytical Devices
27_40_70 Pressure Measurement Submersible
37_60_40 Temperature Measurement RTD
27_71_00 Control Systems Panel Enclosure and Panel Components
27_72_00 Control Systems Programmable Logic Controllers
27_73_30 Control Systems Network Materials & Equipment
27_73_31 Computer System Hardware
27_73_32 HMI System Software
27_95_00 Commissioning for Instrumentation & Controls

DIVISION 28 – ELECTRONIC SAFETY & SECURITY
28_21_01 CCTV Monitoring System

VOLUME 4 OF 8

DIVISION 31 – EARTHWORK
31_00_00 Earthwork
31_05_19 Geosynthetics for Earthwork
31_23_23.33 Flowable Fill
31_23_34 Utility Earthwork & Backfill
31_25_00 Erosion Control
31_41_33 Trench Shielding

DIVISION 32 – EXTERIOR IMPROVEMENTS
32_31_13 Chainlink Fences and Gates
32_92_00 Turf and Grasses

DIVISION 33 – UTILITIES
33_01_30.90 Bypass Pumping of Sewer Systems
33_01_33 Wastewater Liquid & Sludge Removal & Disposal
33_05_05.17 Mechanical Joint Restraint
33_05_07.13 Utility Directional Drilling

THIS PAGE INTENTIONALLY LEFT BLANK FOR DOUBLE SIDED PRINTING

CONTRACT DOCUMENTS
TABLE OF CONTENTS

33_05_07.23 Utility Boring & Jacking
33_05_09.34 Concrete Thrust Blocks & Collars
33_05_25 Steel Casing Pipe
33_05_61 Concrete Manholes
33_05_64 Precast Reinforced Concrete Vault
33_05_97.23 Underground Utility Warning Tape
33_05_97.24 Utility Locator System

DIVISION 40 – PROCESS INTERCONNECTIONS
40_05_00.13 Piping Systems Testing
40_05_06.03 Pipe Couplings
40_05_07.03 Pipe Supports
40_05_12 Piping Specialties
40_05_19.20 Ductile Iron Pipe & Fittings
40_05_23 Stainless Steel Process Pipe & Tubing
40_05_33 High Density Polyethylene (HDPE) Pipe

VOLUME 5 OF 8

40_05_57.24 Electric Actuators for Valves and Gates
40_05_58 Specialty Valves
40_05_59.23 Stainless Steel Gates
40_05_61.43 Knife Gate Valves
40_05_62.64 Butterfly & Plug Valves
40_05_66.23 Surge Relief Angle Valves
40_05_67 Gate Valves
40_05_71.23 Mud Valves
40_41_13.01 Insulation and Heat Tracing
40_71_84 Parshall Flumes
40_75_43 Dissolved Oxygen Sensors

DIVISION 41 – MATERIALS PROCESSING AND HANDLING EQUIPMENT
41_21_23.15 Belt Conveyor System
41_22_00 Cranes & Hoists

DIVISION 43 – PROCESS & LIQUID HANDLING, PURIFICATION & STORAGE EQUIPMENT
43_11_16 High Efficiency Blower Packages
43_23_31.35 Non-Potable Water Pumps
43_23_58.03 Positive Displacement Rotary Lobe Pumps
43_25_13.13 Submersible Pump System

DIVISION 46 – WATER & WASTEWATER EQUIPMENT
46_05_09 Process Equipment Identification
46_05_12 Equipment General Provisions
46_07_54 Waste Activated Sludge Pump Station
46_21_53 Perforated Fine Screen
46_21_73.13 Screw Washer Compactor
46_23_24 Grit Removal, Washing & Dewatering
46_33_33 Polymer Blending & Feed Equipment

THIS PAGE INTENTIONALLY LEFT BLANK FOR DOUBLE SIDED PRINTING

CONTRACT DOCUMENTS
TABLE OF CONTENTS

46_41_23	Submersible Mixers
46_51_55	Low Profile Cascade Aerator
46_53_57	SBR & Aerobic Digester
46_66_57	UV Disinfection Equipment
46_76_21.03	Belt Filter Press System

VOLUME 6 OF 8
CONSTRUCTION DRAWINGS – NORTHSIDE WASTEWATER TREATMENT PLANT

VOLUME 7 OF 8
CONSTRUCTION DRAWINGS – SOUTHSIDE & LIFT STATIONS

VOLUME 8 OF 8
CONSTRUCTION DRAWINGS – CONVEYANCE

THIS PAGE INTENTIONALLY LEFT BLANK FOR DOUBLE SIDED PRINTING

SECTION 01_00_01

BASIC REQUIREMENTS

PART 1 GENERAL

1.1 SCOPE OF WORK

A. These Basic Requirements apply to the entire project. It is **imperative** that the Contractor become **completely** familiar with this Specification section as these notes will be utilized in ascertaining whether the Contractor has completed and complied with project requirements. It is the responsibility of the Contractor to distribute relevant components of this section to any subcontractors, suppliers or others performing work or supplying goods on this project.

B. The City of Shawnee has selected the following Contractors as prequalified General Contractors:
1. Crossland Heavy Contractors, Edmond, OK
2. Downey Contracting, LLC, Oklahoma City, OK
3. MWH Constructors, Inc, Broomfield, CO
4. Oscar Renda Contracting, Inc, Grapevine, TX
5. Thalle Construction Co, Inc, Hillsborough, NC
6. Wynn Construction Co, Inc, Oklahoma City, OK

C. The City of Shawnee has selected the following Contractors as prequalified to install the HDPE piping:
1. Prequalified General Contractors (Self-Perform all associated work without subcontractors)
2. McGuire Brothers Construction, Tulsa, OK
3. Belt Construction, Texarkana, AR
4. Krapff Reynolds, Oklahoma City, OK
5. Orr Construction, Davenport, OK
6. TIMCO Blasting & Coatings, Inc, Bristow, OK
7. Marsau Enterprises, Enid, OK

D. This section outlines miscellaneous project requirements not specifically covered elsewhere in the Contract Documents. If a conflict exists between this section and any other specification section and/or provisions of the contract documents the more stringent/expensive shall govern. Notify engineer immediately of conflict.

E. Section includes:
1. Milestones
2. Specified materials & equipment
3. Related sections of the contract documents
4. Compliance with manufacturer's instructions
5. Drawing & Contract documents for contractor use
6. Related specifications
7. Contractor's superintendent
8. Contractor's field office
9. Engineer's field office

10. Bypass of raw or partially treated sewage
11. Road closings
12. Trenching within public right-of-way
13. Points of access to the site
14. Property provisions
15. Existing utilities and connections
16. Change of pipeline location
17. Groundwater & dewatering plan
18. Quality Assurance
19. Manufacture's Field Services
20. Equipment Electrical Verification
21. Rock Removal
22. Grades, lines & levels
23. Cutting & patching
24. Permits & regulations
25. Regulatory inspections
26. Saturday, Sunday, holiday and night work
27. Assistance by engineer
28. Progress cleaning
29. Incidental work
30. Schedules
31. Schedule of values
32. Payment Requests
33. Safety standards and accident prevention
34. Water for construction
35. Electrical power for construction
36. Materials delivery, handling & storage
37. Blasting
38. Security
39. Site maintenance
40. Pour sequence
41. Abandoned piping
42. Permit-required confined spaces
43. Progress meeting
44. Substantial and final completion
45. Project signs
46. Access and Parking
47. Removal of utilities, facilities and controls
48. Maintenance / spare parts
49. Transfer of utilities
50. Occupancy
51. Final Cleaning
52. Warranty date
53. Project record documents / as-builts
54. Closeout Documents
55. Labor standards
56. Scope of work

1.2 PROJECT

A. Shawnee Wastewater System Improvements

1.3 PROJECT PRIMARY ENGINEER

A. Brandon Wall, P.E.; Wall Engineering; (580) 924-1800

B. Physical Address (for UPS/FedEx Shipment); 223 N. Washington, Durant, OK 74701

C. Mailing Address (for postal mail); PO Box 1457, Durant, OK 74702

1.4 PROJECT CONSULTANTS

A. Unless there is a reasonable objection, the Consultants on this list should be used when/where services are needed.

B. Structural Engineering
   1. BKL, Tulsa, Oklahoma
      a. Stacy Loeffler, P.E., S.E., Principal, (918) 359-8007.
      b. Where services of an Oklahoma Structural Engineer (S.E.) are outlined in the Specifications it shall be BKL unless approved by Engineer for use of supplier/manufacturer Oklahoma Registered Structural Engineer (S.E.)

C. MEP Engineering
   1. Brown Engineering, Little Rock, Arkansas
      a. Bruce Brown, P.E., Principal, (501) 448-0100.

D. Architectural
   1. Redland Childers, Ada, OK
      a. Tim Elliott, AIA, Principal, (580) 436-0770

E. Survey
   1. Lemke Land Surveying, Norman, OK
      a. Steve Lemke, RPLS, (405) 366-8541
      b. Unless there a reasonable objection, Lemke Land Surveying shall be used for project survey.

F. Geotechnical Engineering
   1. Terracon, OKC, OK, (405) 525-0453
   2. Hinderliter Geotechnical Engineering, OKC, OK, (405) 942-4090

1.5 OWNER

A. Shawnee Municipal Authority; PO Box 1448, Shawnee, OK 74802

PART 2 PRODUCTS (NOT USED)

PART 3 EXECUTION

3.1 MILESTONES

A. Milestone 1 - Substantial Completion of all work under this Contract from NTP is 730 calendar days (excluding demolition.) Milestone shall be considered complete when 100% of City wastewater is being treated at Northside WWTP and Southside FEB is complete and fully online.

B. Milestone 2 - Final Completion of all work under this Contract from Substantial Completion is 120 calendar days (including Commissioning & Demolition)

C. Liquidated damages for uncompleted work that is required to meet the milestones set out above shall be $2,500 per Calendar Day.

3.2 SPECIFIED MATERIALS & EQUIPMENT

A. Where materials or equipment are specified by a trade or brand name, it is not the intention of the Owner to discriminate against an equal product of another manufacturer, but rather to set a definite standard of quality of performance, and to establish equal basis for the evaluation of bids. Where the words "equivalent" or "equal to" are used, they shall be understood to mean the equivalent of, or equal to, in the opinion or judgment of the Engineer. Unless a substitute has been approved in writing by written addenda prior to bid date by the Engineer, the Engineer shall have the right to require the use of originally specified item without additional justification.

B. All equipment being submitted as "equivalent" or "equal" shall follow Section 01_33_02 Pre-bid Equipment Submittal Requirements.

C. Should an approved equivalent be allowed by the Engineer the Contractor shall bear full responsibility for reimbursement to the Owner of any/all engineering costs associated with approved equivalent/equal.

D. No material which has been used by the Contractor for any temporary purpose whatsoever is to be incorporated in the permanent structure without written consent of the Engineer.

3.3 RELATED SECTIONS OF THE CONTRACT DOCUMENTS

A. The Contract Documents are a complete unit and complementary to each other. The individual Specification sections and other Contract Documents do not contain all cross references to "related work" or "related sections." It is the Contractor's responsibility to review the complete Contract Documents in order to properly scope, schedule and coordinate the work of any/all subcontractors, suppliers, and others on this project. Anything called out in one location of the Contract Documents is binding as if it were called out in all sections of the Contract Documents.

B. Any Drawing or Specification that conflicts with other Specification sections shall be brought to the attention of the Engineer prior to bid. When no clarification is provided the

Contractor is to assume that more expensive product/system/item is to apply and shall be included in the Contractor's bid.

3.4 COMPLIANCE WITH MANUFACTURERS INSTRUCTIONS

A. When Contract Documents require that installation of work shall comply with Manufacturer's printed instructions or recommendations, obtain and distribute copies of such instructions and / or recommendations to parties involved in the installation, including two copies to the Owner and one copy to the Engineer. Maintain one set of complete instructions at the job site during installation and until completion.

B. Handle, install, connect, clean, condition and adjust products in strict accord with such instructions / recommendations and in conformity with specified requirements.

C. Should job conditions or specified requirements conflict with Manufacturer's instruction, consult with Engineer for further instructions.

D. Do not proceed with work without clear instructions.

E. Perform work in accordance with Manufacturer's instructions / recommendations. Do not omit any preparatory step or installation procedure unless specifically authorized by the Engineer.

F. Manufacturer shall supply to the Engineer a statement of compliance on equipment / materials furnished, certifying that it meets the specification requirements and has been installed in accordance with the Manufacturer's instructions.

3.5 DRAWINGS AND CONTRACT DOCUMENTS FOR CONTRACTOR USE

A. The Specifications and Drawings have equal importance. The Contractor shall notify the Engineer of any conflicts discovered in the documents. In the case of conflicts, the most conservative criteria will govern and the Engineer will make final decisions on resolution.

B. When no clarification is provided the Contractor is to assume that more expensive product/system/item is to apply and shall be included in the Contractor's bid.

3.6 RELATED SPECIFICATIONS:

A. The Oklahoma Department of Transportation "Standard Specifications for Highway Construction" latest edition are hereby adopted as part of these Specifications where reference is made. Said Specifications may be hereinafter referred to as the "ODOT Standard Specifications". However, no portion of the Standard Specifications referring to Basis of Payment will be adopted as part of these Specifications.

B. All construction shall conform, wherever applicable, in its entirety to CWA (Clean Water Act) regulations and the most current edition of the ODEQ (Oklahoma Department of Environmental Quality) which govern public systems including OAC 252:626 & OAC 252:656 and all other section of ODEQ regulations cited therein. The requirements and standards called for shall be fully applicable and enforced in the construction of this project.

3.7 CONTRACTOR'S SUPERINTENDENT

A. All operations shall be under the control of the Contractor's general superintendent. The General Superintendent shall be experienced in all aspects of the project. The Superintendent's experience and diligence will be the key to maintaining proper quality control during the project. The contractor shall not complete any project work without a designated superintendent present, no exceptions. All written and verbal communications with designated superintendent shall be binding.

3.8 CONTRACTOR'S FIELD OFFICE:

A. During the performance of this contract, the Contractor shall maintain a suitable office on the site of the work which shall be headquarters of a representative authorized to receive drawings, instructions, or other communication or articles. Any communication given to the said representative or delivered at the Contractor's office at the site of the work in his absence shall be deemed to have been delivered to the Contractor.

B. Copies of the Drawings, Specifications, and other Contract Documents shall be kept at the Contractor's office at the site of the work available for use at all times.

C. The Contractor may store material on site as space is available or shall be responsible for obtaining a location for stored materials/stockpile off site as required. The stored material shall be kept in an orderly fashion, and located in an area where its use by the Contractor will be in accordance with any area zoning requirements as applicable.

3.9 ENGINEER'S FIELD OFFICE: (NORTHSIDE LOCATION)

A. Furnish and continuously maintain throughout the project duration a field office for the Owner and the Engineer's use which meets the following requirements:
   1. Minimum size of 12 feet x 60 feet.
      a. The building is to be divided into three separate spaces (two offices and conference) by full height walls with a single 3-foot 0-inch x 6-foot 8-inch door for passage in each wall. The office spaces are to be located at each end of the building and are to be 12 feet x 12 feet.
      b. Each space is to have an exterior 3-foot 0-inch x 6-foot 8-inch weathertight door located on one side of building.
      c. Each office space is to have a minimum of one (1) 4-foot 0-inch x 5-foot 0-inch window.
      d. Flooring may be plywood, vinyl, or VCT tile. Do not use carpet.
   2. Separate from Contractor's office.
   3. Structurally sound, weather-tight, and have floor raised above the ground.
   4. Adequately braced and anchored to prevent movement.
   5. Heated and air conditioned.
   6. Provide a fully plumbed indoor restroom located in one corner of the center section of the building. The restroom shall contain a flush toilet, sink, medicine cabinet with mirror, and storage shelving. Connect fixtures to complete potable water, sanitary, and vent systems.
   7. Make connections to electrical power source and provide electrical service to building for duration of project.
   8. Provide a skirt around perimeter of building of same material as building siding.

9. Construct a porch with steps and covered overhang at each entrance. Construct a handicap accessible ramp to main entrance. Provide railing around porch, steps, and ramp.
10. Provide burglar bars on all windows and hinged burglar bars on outside doors with padlocks or door locks.
11. Provide operable, screened windows with locks.
12. Provide Venetian type blinds for all windows.
13. Provide electric water cooler with bottled water supply for the duration of the project.
14. Provide furnishings manufactured by HON, or approved equal as follows:
    a. Three (3) 2-foot 6-inch x 5-foot 0-inch office desks with credenza.
    b. Three (3) fabric covered, cushioned adjustable arm chairs with swivel/tilt/roll capabilities and three (3) protective floor mats.
    c. One (1) 3-foot 0-inch x 8-foot 0-inch folding table.
    d. Two (2) 2-foot 6-inch x 5-foot 0-inch folding tables.
    e. Ten (10) padded folding chairs.
    f. One (1) Storage rack for 24”x36” plans
    g. One (1) Marking board at least 3 feet x 5 feet
    h. Two (2) cushioned drafting stool with back.
    i. Two (2) drafting table or layout table similar to Mayline Model 7737-B.
    j. Plan holding rack similar to Planhold Model 43CRI-30 with 10 holders.
    k. Two (2) legal size, 4-drawer filing cabinets.
    l. Two (2) 4-shelf metal bookshelves.
    m. Three (3) wastepaper baskets similar to Lawson Model H9-334-09.
15. Bottle water dispenser and service during the project
16. High speed internet access with at least 10 Mbps download speed & wireless capabilities
17. Provide a Hewlett Packard Laserjet 3200se Printer/Fax/Copier/Scanner, or approved equal.
18. Provide a new or leased copier.
    a. Konica 3135 copier or equal with auto feed/sort/collate features and 11x17 copying capabilities, or approved equal.
    b. Provide service and maintenance agreement throughout duration of project.
19. Furnish and maintain office supply stock, including but not limited to, pens, pencils, markers, staples, notepads, paper, posted notes, file folders, paper clips, binder clips, etc.
20. Furnish a microwave unit with a minimum cooking volume of 1.5 cubic feet.
21. Furnish a refrigerator with minimum storage capacity of 3.5 cubic feet. Refrigerator shall include a freezer section.
22. Provide sufficient lighting for office environment using fluorescent light fixtures with lenses energized by wall switches. Provide switches adjacent to doorway into each space.
23. Provide three (3) duplex receptacles in each office space and four (4) duplex receptacles for the remainder of the building.
24. Provide a fire extinguisher and first aid kit.
25. Office and/or materials of construction may be new or used but must be in good condition acceptable to the Owner/Engineer, serviceable, adequate for the intended purpose, and must not violate codes or regulations.
26. Field office and furniture will remain the property of the Contractor.

27. If all-weather parking surface is not readily available adjacent to the office, the Contractor shall provide and maintain a 4-inch crushed rock surfaced parking lot of sufficient size to park two full size cars with enough driveway area to provide unrestricted access to each parking space. At the completion of the project, the parking area shall be removed and the site returned to its original condition.

ENGINEER'S FIELD OFFICE: (SOUTHSIDE LOCATION)

B. For the use of the Engineer and other representatives of the Owner during the performance of this Contract, the Contractor shall provide and maintain at the site, at a location approved by the Engineer, a field office with a floor space of not less than 240 square feet and may be portable or other suitable type with 7-ft. minimum ceiling height. This office shall be of watertight construction with suitable windows and doors, properly screened, reasonably dustproof and shall contain:
   1. Toilet and wash facilities. Provide sewage disposal service for the toilet and drain in accordance applicable codes.
   2. Minimum features shall include the following:
      a. 110-volt lighting and wall plugs
      b. Ceiling lights
      c. Electric heating and self-contained air-conditioning units properly sized for the project location and conditions.
      d. Railed stairways and landings at entrances
      e. Windows at least every 15 feet
   3. One desks and chair (30”x48” minimum)
   4. Storage rack for 24”x36” plans
   5. Marking board at least 3 feet x 5 feet
   6. First aid kit
   7. Bottle water dispenser and service during the project
   8. High speed internet access with at least 10 Mbps download speed & wireless capabilities

C. If all-weather parking surface is not readily available adjacent to the office, the Contractor shall provide and maintain a 4-inch crushed rock surfaced parking lot of sufficient size to park two full size cars with enough driveway area to provide unrestricted access to each parking space. At the completion of the project, the parking area shall be removed and the site returned to its original condition.

D. The field office shall remain the property of the Contractor and shall be removed upon the completion of Work.

3.10 BYPASS OF RAW OR PARTIALLY TREATED SEWERAGE

A. No bypass of raw or partially treated solid waste or wastewater shall be permitted. If there is an accidental bypass and/or discharge of raw sewage at the site, Contractor shall immediately notify the Owner, the Engineer, and ODEQ. Contractor shall execute the required forms and provide copies to the Engineer and pay any and all fines levied by the regulatory agency for the bypass and/or illegal discharge.

3.11 ROAD CLOSINGS:

A. The Contractor shall notify the Owner of any public road at least five (5) days prior to the time he intends to obstruct any portion of the road. If the Owner agrees to the street obstruction, the Contractor shall notify the Fire Department, Police or Sheriff Department, ambulance service and news media forty-eight (48) hours prior to obstructing the road and shall keep the street in condition for unobstructed use by emergency vehicles. News media notification shall include at least one local newspaper and at least one local radio station.

B. The Contractor shall submit a traffic control plan detailing road closing to Engineer with sufficient review time prior to forty-eight (48) hour notice period.

3.12 TRENCHING WITHIN PUBLIC RIGHT-OF-WAY

A. Completely backfill trenches across streets and install temporary or permanent pavement as soon as possible after pipe laying.

B. Site conditions:
1. Use substantial steel plates with adequate trench bracing to bridge across trenches at street and alley crossings, commercial driveways, and residential driveways where trench backfill and temporary patch have not been completed during regular working hours.
2. Provide safe and convenient passage for pedestrians.
3. Maintain access to fire stations, fire hydrant, and hospitals at all times.
4. Provide traffic control devices, barricades, and signage as required by the regulating agency.

3.13 POINTS OF ACCESS TO THE SITE

A. Restrict entry into Site to points where the easements cross state and county roads and highways or other publicly owned roads and streets. Keep operations within the easement.

B. Maintain access to the facilities at all times. Do not obstruct roads, pedestrian walks, or access to the various buildings, structures, stairways, or entrances. Provide safe temporary walks or other structures to allow access for normal operations during construction.

C. Provide adequate and safe access for inspections. Leave ladders, bridges, scaffolding and protective equipment in place until inspections have been completed. Construct additional safe access if required for inspections.

D. Provide security at the construction Site as necessary to protect against vandalism and loss by theft.

E. Maintain security of the Site and access leading to it.
1. Close gates and keep locked.
2. Obtain permission of any landowners whose property must be crossed in gaining access to the Site.
3. Install a gate lock consisting of a chain with two locks. Give one lock and key to the landowner. Use one lock for the Contractor, Construction Manager, and Owner. Provide keys to the Contractor's lock to Owner and Construction Manager.

4. At the end of the Project, remove the Contractor's lock from the assembly.

3.14 PROPERTY PROVISIONS

A. Make adequate provisions to maintain the flow of storm sewers, drains, and water courses encountered during the construction. Restore structures which may have been disturbed during construction to their original position as soon as construction in the area is completed.

B. Protect trees, fences, signs, poles, guy wires, and all other property unless their removal is authorized. Restore any property damaged to equal or better condition.

C. Provide temporary fencing, with gates, to restrain livestock in areas where livestock are pastured unless the Contractor makes satisfactory arrangements with the property owner and/or tenant. Install temporary fence on the easement lines and removed after the trench has been backfilled. Pay damages for losses resulting from failure to maintain such barriers or failure of barriers to exclude livestock. Install temporary fencing on any tract in order to contain construction activities within easement limits.

3.15 EXISTING UTILITIES AND CONNECTIONS

A. Any existing utilities are shown based on what is visible outside and existing as-built maps. Depth of these utilities, which may interfere with pipeline construction, is not known. Contractor shall be aware of the possibility of running into existing utilities during construction and shall prepare his bid to cover any cost of repairing the damages that may be caused during construction. No additional payment shall be made to the Contractor for dealing with any existing utilities at the construction site.

B. There may be additional buried lines that are not shown and if such is encountered, said lines will be left in service. If said lines are broken by the Contractor, they shall be repaired as soon as possible. No additional payment shall be made to the Contractor for dealing with any existing utilities at the construction site. Contractor shall prepare his bid to cover any cost of field verifying existing utilities including uncovering where necessary.

C. Where connection to existing lines are shown on the Drawings, the work may be required to be done at night or at a time which will least interfere with the operation of the existing facility. The work shall be coordinated and scheduled with the Owner and will be done at a time to least inconvenience their operation.

D. Contractor shall be responsible for damage to utilities whether being shown on the Drawings or not.

E. Contractor shall be responsible for contacting all utility companies prior to construction.

F. See bid item descriptions and payment procedures for additional utility requirements.

3.16 CHANGE OF PIPELINE LOCATION

A. The alignment of the pipeline is shown on the Drawings, and no change is contemplated. It may be necessary to change the alignment due to utility conflicts, unanticipated

variations in existing conditions, or for any other reason prior to the time pipe is actually installed.

B. No additional compensation will be paid to the Contractor except as provided by unit prices, unless excessive cost is incurred that is directly applicable to such changes and this cost is documented in accordance with the General / Supplemental Conditions. No compensation will be paid for specials, field cuts, field welds, or other incurred cost resulting from failure to locate existing utilities prior to manufacture of pipe.

3.17 GROUNDWATER & DEWATERING PLAN

A. The Geotechnical Report indicates that groundwater will be present. It shall be the responsibility of the Contractor to dewater, as necessary to protect the work site and keep the worksite safe. Contractor shall consult a Geotechnical Engineer and provide a Dewatering Submittal outlining steps which will be taken to contend with groundwater for the different soil types in this area. All costs of dewatering construction work areas shall be included in most appropriate bid item and there shall be no additional cost to the Owner

B. Contractor shall take all necessary measures to keep excavations clear of ground water, sewage, or storm water during the process of the work and until the finished work is safe from injury.

C. Contractor shall be responsible for site, surface and subsurface drainage. Maintain such drainage as specified herein during the life of the contract.

D. Supply all supervision, labor, material, and equipment including standby equipment, necessary to maintain a dry excavation as may be necessary to construct the project.

E. Maintain groundwater in or below the bearing strata at a safe level at all times by methods which prevent loss of fines, which preserves the undisturbed state of subgrade soils and which sufficiently lowers the groundwater level in permeable strata at or below excavation and fill levels such that blowing or unstable conditions do not develop in the bottom or sides of excavation or fill areas.

F. Water shall be kept out of exaction areas as necessary to protect the supporting strength of foundation material, to permit efficient and satisfactory assembly, or replacement of facilities, to prevent floatation of equipment or structures, to prevent misalignment of facilities, and to prevent unstable conditions developing in the bottom or sides of excavation areas.

G. Protect all adjacent structures, existing and under construction , from settlement, flotation, damage, or other adverse effects resulting from accumulation of water, water removal, or dewatering methods.

H. Install all drains, ditching, sluiceways, pumping, and bailing equipment, wicking, sumps, wells, well points, cutoff trenches, curtains, sheeting, drains, and all other equipment and structures necessary to create and maintain a dry excavation and groundwater level at a minimum of 2 feet below excavation subgrades.
   1. As part of any dewatering system, observation wells or piezometers shall be provided and installed, as required, to effectively and efficiently monitor drawdown to required levels.

I. Discharge water removed from the site to natural watercourses, storm drains or channels
   1. Disposal of water shall be in a manner satisfactory to Engineer and Owner and in conformance with all Federal, State, and local rules, regulations, codes, and permits.
   2. Disposal of water shall cause no damage to property or any work under construction or constructed.
   3. Large quantities of water shall not be discharged as overland flow. Overland flow is not permitted onto private property.
   4. No water shall be discharged into sanitary sewers.
   5. Sanitary sewage shall be disposed of in a manner satisfactory to local, state, and federal officials.

J. Dewatering operations shall cease when all foundations, structures, pipe installations, and other excavated areas have been properly backfilled and compacted and are safe from damage, flotation, settlement, displacement, or other injury.

K. No pipe shall be laid in water, and water shall not be allowed to run over masonry until concrete or mortar has set at least forty-eight (48) hours.

L. Necessary precautions shall be taken to protect all new and existing structures from flooding and/or flotation from hydrostatic uplift.

M. Dewatering of the excavation shall be considered an integral part of the excavation work and should be bid with the most appropriate item

N. Operate and maintain dewatering and removal operations on a 24-hour basis for the time required to complete that portion of the Work which requires dewatering prior to its construction and which requires protection from floatation or displacement of such Work until proper backfilling and compaction is completed.

O. There are portions of the project where has no geotechnical data has been collection collected, but should groundwater be present it shall be the responsibility of the Contractor to dewater, as necessary to protect the work site and keep the worksite safe. All costs of dewatering construction work areas shall be included in most appropriate bid item and there shall be no additional cost to the Owner.

3.18 QUALITY ASSURANCE

A. The Contractor shall assume full responsibility for coordination of the entire project, including verification that all structures, piping, coating systems and equipment components are compatible. The Contractor shall initially operate each equipment system, and shall make all necessary adjustments so that each system is placed in proper operating condition.

B. Monitor quality control over suppliers, manufacturers, products, services, site conditions, and workmanship, to produce work of specified quality.

C. Comply fully with manufacturers' instructions, including each step-in sequence. Taking delivery of materials that later prove to be unusable shall be the responsibility of the contractor. Contractor shall pay restocking fee if applicable, and as necessary. Shop

drawing approval by the Engineer does not guarantee payment for material or equipment not needed or not incorporated into the project.

D. Should manufacturers' instructions conflict with Contract Documents, request clarification from Engineer before proceeding.

E. Comply with specified standards as a minimum quality for the Work except when more stringent tolerances codes, or specified requirements indicate higher standards or more precise workmanship.

3.19 MANUFACTURER FIELD SERVICES

A. When specified in individual specification Sections, required material or Product suppliers or manufacturers to provide qualified staff personnel to observe site conditions, conditions of surfaces and installation, quality of workmanship, start-up of equipment, test, adjust, and balance of equipment and applicable, and to initiate instructions when necessary.

B. Individuals to report observations and site decisions or instructions given to applicators or installers that are supplemental or contrary to manufacturers' written instructions. Nothing should be contrary to Manufacturer's written instructions that would void Manufacturer's warranty.

C. If manufacturer' warranty is voided on any equipment for any reason it is the responsibility of the Contractor to replace the equipment at Contractor's cost.

D. Submit report within 2 days of observation to Engineer for review.

E. Services Provided by Representative
   1. Site Visit: Manufacturer's Representative shall:
      a. Inspect existing site facilities prior to starting work and factor in all site constraints in equipment design and configuration.
         1) Perform periodic visits to site during construction to assure installation tolerance and method meets manufacture and industry standards.
         2) Inspect,check, and adjust equipment as required and approve installation.
      b. Be present when equipment is placed in operation and during performance testing.
      c. Revisit the site as often as required to correct all problems and until equipment installation and operation are acceptable to Engineer, and Owner.

F. Training: The equipment Manufacturer shall submit the outlines of lesson plans and proposed training schedules to the Owner for approval 15 days prior to instructional period. The training shall include approximately 1/2 time for classroom instruction and 1/2 time for hands-on training. This work may be conducted in conjunction with Inspection and Testing, wherever possible, as provided in the detailed specifications. However, the total number of days specified for either instruction of Owner's and Engineer's representatives on proper operation and maintenance of equipment or field inspection and testing shall not be reduced. Each training shall be conducted in two separate sessions, so that the

Owner can schedule half the staff for each training session. The Contractor will videotape all training sessions for future training of the Owner's Personnel.

3.20 EQUIPMENT ELECTRICAL VERIFICATION

A. Contractor shall verify the electrical requirements of proposed equipment prior to bid and compare with the electrical drawings. Any electrical requirements for individual equipment shall be the Contractors responsibility, regardless of being shown or omitted from electrical drawings and should be included in the price bid.

3.21 ROCK REMOVAL

A. The geotechnical report indicates that rock will be present on this project. Rock removal will not be measured for payment and should be included in the price bid for other items of work.

B. Should rock differ substantially from what is shown in the Geotech Report, removal will be paid for from the bid allowance based on equipment hourly rates for actual time accrued.

3.22 GRADES, LINES & LEVELS:

A. The Contractor shall provide all surveying and construction staking required to construct the project. The Contractor shall employ a surveyor licensed in the State of Oklahoma to provide said surveys and staking. The Owner will provide points for horizontal control and bench marks for elevation.

B. The Contractor shall construct all structures and pipelines to within the following tolerances. In all cases, the grading must be such that water is not ponded and drainage is not impeded. Field adjustment is permissible to establish drainage.

	Alignment	Grade
Structures	±0.10 ft.	±0.02 ft.
Pavement	±0.20 ft.	±0.05 ft.
Pipelines	± 0.1 ft.	± 0.2 ft
Grading	--	±0.10 ft.
Ductbanks	1.00 ft./1000 ft.	0.25 ft./100 ft.

C. All permanent benchmarks at the site (if existing) are shown on the plans.

D. Prior to mobilization the Contractor shall verify the grade and location of all permanent benchmarks. If a discrepancy is found, the Contractor shall have the benchmarks checked and resolve the discrepancy. After such time, the Contractor shall be responsible for the accuracy and protection of all benchmarks.

E. The Contractor shall be responsible for layout, staking and control of all grades, lines and levels from control shown on the plans.

F. The Contractor shall safeguard all permanent benchmarks at the site and shall bear the cost of replacing the benchmarks and assume entire expense or correcting work improperly constructed due to failure to maintain and protect such established points and marks

3.23 CUTTING AND PATCHING

A. Perform cutting, fitting, and patching required to complete the Work or to:
1. Uncover Work to provide for installation of new Work or the correction of defective Work.
2. Provide routine penetrations of non-structural surfaces for installation of mechanical, electrical, and plumbing Work.
3. Uncover Work that has been covered prior to observation by the Engineer.

B. Submit written notification to the Engineer in advance of performing any cutting which affects:
1. Work of any other contractors or the Owner.
2. Structural integrity of any structure or system of the Project.
3. Integrity or effectiveness of weather exposed or moisture resistant structure or systems.
4. Efficiency, operational life, maintenance, or safety of any structure or system.
5. Appearance of any structure or surfaces exposed occasionally or constantly to view.

C. The notification shall include:
1. Identification of the Project.
2. Location and description of affected Work.
3. Reason for cutting, alteration, or excavation.
4. Effect on the Work of any separate contractor or Owner.
5. Effect on the structural or weatherproof integrity of the Project.
6. Description of proposed Work, including:
    a. Scope of cutting, patching, or alteration.
    b. Trades that will perform the Work.
    c. Products proposed for use.
    d. Extent of refinishing to be performed.
    e. Cost proposal, when applicable.
7. Alternatives to cutting and patching.
8. Written authorization from any separate contractor whose Work would be affected.
9. Date and time Work will be uncovered or altered.

D. Examine the existing conditions, including structures subject to damage or to movement during cutting or patching.
1. Inspect conditions affecting installation of products or performance of the Work after uncovering the Work.
2. Provide a written report of unacceptable or questionable conditions to the Engineer. The Contractor shall not proceed with Work until Engineer has provided further instructions. Beginning Work will constitute acceptance of existing conditions by the Contractor.

E. Protect the structure and other parts of the Work and provide adequate support to maintain the structural integrity of the affected portions of the Work. Provide devices and methods to protect adjacent Work and other portions of the Project from damage. Provide protection

from the weather for portions of the Project that may be exposed by cutting and patching Work.

F. Execute cutting and demolition by methods which will prevent damage to other Work, and will provide proper surfaces to receive installation of repairs.

G. Execute fitting and adjustment of products to provide a finished installation to comply with specified products, functions, tolerances, and finishes.

H. Cut, remove, and legally dispose of selected mechanical equipment, components, and materials as indicated, including but not limited to, the removal of mechanical piping, heating units, plumbing fixtures and trim, and other mechanical items made obsolete by the modified Work.

I. Restore work which has been cut or removed. Install new products to provide completed work per the Contract Documents.

J. Fit Work airtight to pipes, sleeves, ducts, conduit, and other penetrations through the surfaces. Where fire rated separations are penetrated, fill the space around the pipe or insert with materials with physical characteristics equivalent to fire resistance requirements of penetrated surface.

K. Patch finished surfaces and building components using new products specified for the original installation.

L. Refinish entire surfaces as necessary to provide an even finish to match adjacent finishes:
1. For continuous surfaces, refinish to the nearest intersection.
2. For an assembly, refinish the entire unit.

3.24 PERMITS AND REGULATIONS:

A. The Contractor & all Subcontractors shall secure and pay for all construction and Owner required permits required to carry out the work unless otherwise specified and shall produce same upon demand of the Owner. The Contractor shall obtain completion survey, certificate of completion or occupancy if required by local regulations.

B. All features of design and construction shall comply with the local building regulations and/or other lawful or public regulations which apply at the site. If any features of construction as shown on the Owner's plan, do not conform to the regulations, the Contractor shall notify the Owner of such discrepancy, and shall base his quotation and work on features of construction which do conform to the regulations.

C. If the Contractor performs any work contrary to such laws, ordinances, rules and regulations and without such notice to the Owner, he shall bear all costs arising there from.

D. All Contractor and Subcontractors shall register with City prior to beginning construction (if required.)

3.25 REGULATORY INSPECTIONS:

A. The Contractor will provide access to the work site and facilities for representatives of the Oklahoma Department of Environmental Quality (ODEQ) and other agencies, as well as, Owner and Engineer, as required whenever the work is in progress.

3.26 SATURDAY, SUNDAY, HOLIDAY AND NIGHT WORK:

A. No work shall be done between the hours of 7:00 p.m. and 7:00 a.m., nor on Saturday, Sunday or legal holidays without the approval of the Engineer, in each case, except such work as may be necessary for the proper care, maintenances and protection of work already done, or of equipment, or in the case of an emergency.

3.27 ASSISTANCE BY ENGINEER:

A. It is understood and agreed that such assistance as the Engineer may render to the Contractor in connection with the interpretation of drawings and Specifications shall not relieve the Contractor from any responsibility for the work. Any work which proves faulty shall be corrected by the Contractor without delay. The failure of the Engineer, or Resident Project Representative to call the Contractor's attention to faulty work or work performed which is not in accordance with Drawings and Specifications shall not imply acceptance or exempt the Contractor for correcting the improper work.

3.28 PROGRESS CLEANING

A. Maintain areas free of waste materials, debris, and rubbish. Maintain site in a clean and orderly condition. Where work is performed in residential and commercial areas, cleanup sufficient to permit normal access and use by property owners shall be performed daily. Final cleanup shall be performed after each individual water or sewer extension has been installed. Failure to perform clean-up work as described above may result in retainage of an additional 10 percent of the cost of the work completed until the clean-up work has been completed or non-processing of additional pay requests.

3.29 INCIDENTAL WORK:

A. Work called for on the Drawings and/or Specifications and are not set forth in the Bid Schedule as pay items, shall be considered as incidental work and will not be paid for directly, but shall be included in the price bid for the various pay items.

3.30 SCHEDULES:

A. The Contractor shall furnish the Engineer with a tentative schedule, in a format approved by the Engineer, setting forth in detail the procedure he proposes to follow, and giving the dates on which he expects to start and to complete separate portions of the work. The schedule shall be updated and submitted to the Engineer on a monthly basis corresponding with the date of the monthly progress meetings and/or pay applications.

B. If at any time, in the opinion of the Engineer, proper progress is not being maintained, such changes shall be made in the schedule of operations which will satisfy the Engineer that the work will be completed within the period stated in the proposal.

C. Whenever it becomes apparent from the current schedule and monthly progress reports that delays to the critical path have resulted and the Contract completion date will not be met, or when so directed by the Owner, the Contractor shall take some or all of the following actions at no additional cost to the Owner. The Contractor shall submit to the Owner for approval, a written statement of the steps he intends to take to remove or arrest the delay to the critical path in the approved schedule.
   1. Increase construction manpower
   2. Increase the number of working hours per shift, shifts per day, working days per week, and/or the amount of construction equipment
   3. Reschedule activities to achieve maximum schedule gain

D. Float is not for the exclusive benefit of the Contractor, but is an expiring resource available to the Owner and the Contractor to accommodate changes in the Work, however originated. Contract time extensions will be granted only to the extent that delays to affected work paths exceed available float along the critical path of the current updated construction schedule in effect at the time of delay. Contract time extensions will be granted only to the extent that such delays are beyond the control and without fault of negligence of the Contractor or any subcontractor at any tier. Contractors shall develop initial construction schedule to include 30 days of float allocated to the Owner.

3.31 SCHEDULE OF VALUES

A. Within ten (10) calendar days following the Effective Date of the Contract, the Contractor shall submit to the Engineer a schedule of values (a breakdown of each lump sum bid) which in turn shall be used to determine partial payment estimates and may be used to verify costs of credits, change orders, etc.
   1. The tentative schedule of values will be reviewed by the Engineer to determine whether, in his judgment, the schedule of values is of sufficient detail and if the prices included are "unbalanced" or "front-end loaded", in an effort to inflate the prices of those items of work to be completed in the early stages of the work.
   2. The Engineer will provide the Contractor with his comments and/or may request additional information from the Contractor to justify certain item quantities and prices therefore. The Contractor shall address the Engineer’s comments, revise the schedule, and resubmit the tentative schedule for further review and/or approval.
   3. Once the tentative schedule is accepted by the Engineer, it shall become the schedule of values to be used in verifying partial payment estimates.
   4. No partial payment request (including the first) shall be approved until the schedule of values has been approved by the Engineer and received by the Owner.
   5. Each partial payment request by the Contractor shall include the approved schedule of values, modified to indicate the total quantity and price of the work completed to the date of the request. After acceptance of the schedule of values submittal, no modifications will be made to the schedule of values, except as required by approved change orders.
   6. In so far as possible, total quantities and unit prices shall be shown for all items of work, separating for each item the materials and labor and such other sub-items as the Contractor may desire. "Lump sum", "miscellaneous", and other such general entries in the schedule shall be avoided whenever possible. Such items as Bond premiums, insurance, temporary facilities and equipment storage may be listed separately in the schedule of values provided the costs can be substantiated. Overhead and profit shall not be listed as separate items.

7. No additional payment will be allowed if the quantities shown on the schedule are less than those actually required to accomplish the work, unless the quantities are altered by a change order.

3.32 PAYMENT REQUEST PROCEDURE

A. Contractor shall prepare the partial pay estimate and submit it to the engineer's field personnel.

B. Engineer's field personnel will check the estimate for accuracy and completeness and recommend any changes.

C. Contractor shall make revisions to the estimate and submit required number of copies to the Engineer for processing.

D. Pay requests shall not be submitted more than once per Month.

3.33 SAFETY STANDARDS AND ACCIDENT PREVENTION:

A. With respect to all work performed under this Contract the Contractor shall:
1. Comply with the safety standards provisions of applicable laws, building and construction codes and the "Manual of Accident Prevention in Construction" published by the Associated General Contractors of America, the requirements of the Occupational Safety and Health Act of 1970 (Public Law 91-596), and the requirements of Title 29 of the Code of Federal Regulations, Section 1910 or 1926, as applicable.
2. Exercise every precaution at all times for the prevention of accidents and the protection of persons (including employees) and property.
3. Follow standard / OSHA practices of trench safety throughout project.

3.34 WATER FOR CONSTRUCTION:

A. The Contractor shall arrange for the necessary temporary water service, including the securing of any necessary permits.
1. The Contractor shall make the necessary arrangement to supply water required for testing the work prior to acceptance of the work, unless otherwise specifically stated in the Specifications for the equipment, system, or facility.
2. Cost of water usage shall be borne by the Contractor. The Contractor shall use temporary water meters as required by the City to monitor the use of potable water.
3. Contractor shall implement dust control measures to minimize the creation and dispersion of dust. Dust control will include application of water to control dust from roadways and other activities. Contractor shall apply clean water to gravel and unsurfaced roads. Contractor must use a fire hydrant meter to obtain water from the plant. Contractor shall bear the cost of water used for dust control.

3.35 ELECTRICAL POWER FOR CONSTRUCTION

A. The Contractor shall determine the type and amount required and make arrangements for providing temporary electric power. The Contractor shall pay all costs related to obtaining temporary electrical services

1. The Contractor shall maintain the temporary electric power system during the Contract period at his expense.
2. The electrical service shall be of adequate capacity for all construction tools and equipment without overloading the temporary facilities. The temporary systems and their components shall be furnished and installed in conformance with the requirements of the National Electrical Code and all local authorities having jurisdiction.
3. Temporary electric power installation shall meet the construction safety requirements of NEC. Federal (OSHA), State and other governing agencies.
4. Cost of electrical power usage for the Contractor's and his subcontractor's construction trailers and associated equipment shall be paid for by the Contractor.

3.36 MATERIAL DELIVERY, HANDLING AND STORAGE

A. Contractor's storage facilities, if necessary, will be located as specified, indicated in the drawings, or a bonded storage facility in the general vicinity. Any off-site storage is subject to Owner's approval. All storage costs and transportation are the responsibility of the Contractor.

B. Arrange deliveries of products in accordance with construction schedules; coordinate to avoid conflict with work and conditions at the site.

C. Deliver products in undamaged condition, in Manufacturer's original containers or packaging, with identifying labels intact and legible.

D. Immediately upon delivery, inspect shipments to assure compliance with requirements of Contract Documents and approved submittals, and that products are properly protected and undamaged.

E. Provide equipment and personnel to handle products by methods to prevent soiling or damage to products or packaging.

F. Owner will not accept deliveries for Contractor or assist in unloading.

G. All materials shall be stored in accordance with Manufacturer's recommendations.

H. Indoors:
1. Store products in accordance with Manufacturer's instructions, with seals and labels intact and legible.
2. Store products subject to damage by the elements in weathertight enclosures.
3. Maintain temperature and humidity within the ranges required by Manufacturer's instructions.

I. Outdoors:
1. Provide substantial platforms, blocking, or skids to support materials and products above ground; slope to provide drainage. Protect products from soiling or staining.
2. Cover products subject to dislocation or deterioration from exposure to the elements, with impervious sheet materials. Provide ventilation to prevent condensation below covering.
3. Store loose, granular materials on clean, solid surfaces, or on rigid sheet materials, to prevent mixing with foreign matter.

4. Provide surface drainage to prevent erosion and ponding of water.
5. Prevent mixing of refuse or chemically injurious materials or liquids with stored materials.
6. Pipes and conduits stored outdoors are to have open ends sealed to prevent the entrance of dirt, moisture, and other injurious materials. Protect PVC pipe from ultraviolet light exposure.
7. Store lightweight products to prevent wind damage.

3.37 BLASTING

A. Blasting for excavations is not allowed.

3.38 SECURITY

A. Furnish, install and maintain suitable barriers and protections to prevent public entry, and to protect the work, existing facilities and existing roads from construction operations. Damage to existing roads caused by the Contractors' vehicles shall be repaired by the Contractor at no cost to the Owner.

B. The Contractor shall take all necessary measures and be solely responsible for the protection of temporary facilities, finished construction areas, equipment, and materials at the site until the project has been completed and accepted by the Owner.

3.39 SITE MAINTENANCE

A. The Contractor shall limit his on-site operations and storage of equipment and materials to the area designated on the Plans and Specifications and as directed by the Owner.

B. Except as provided herein, no sidewalk, private property, or other areas adjacent to the plant site shall be used for storage of the Contractor's equipment and materials unless prior written approval is obtained from the Owner.

C. The Contractor shall maintain the area during construction in a manner that will not obstruct operations on street areas. Contractor shall proceed with his work in an orderly manner, maintaining the construction site free of debris and unnecessary equipment or materials.

D. At all times, the Contractor shall maintain areas covered by the Contract and public properties free from accumulations of waste, debris, and rubbish caused by construction operations. All trash and waste materials shall be cleaned up and disposed in an approved waste receptacle each day.

E. Excavated materials shall be removed from the site in a manner that will cause the least damage to adjacent lawns, grassed areas, trees, gardens, shrubbery, or fences regardless of whether these are on private property or on public right-of-ways.

3.40 POUR SEQUENCE

A. Contractor shall provide a pour sequence for each and every structure. All shop drawings pertaining to and affecting the structure shall be approved prior to starting this work. Bolt patterns for gate and equipment installations must be checked, equipment dimension shall

be verified to ascertain that proper installation can be accomplished, pipe penetrations shall be verified, and conflicts shall be immediately brought to Engineer's attention prior to doing the work. Contractor shall also verify location of windows, doors, ducts, equipment lifting devices, unit heaters, electrical and mechanical work which may affect the outcome of the project. Work done without proper verification or notification shall be removed and re-done at no additional expense to the Owner.

3.41 ABANDONED PIPING

A. Abandoned underground plant piping greater than 12" shall be removed or filled with flowable fill to prevent future cave-ins as part of the demolition process. No separate payment will be made for the removal or placement of flowable fill. Costs for this work shall be included in the bid item for demolition.

3.42 PERMIT-REQUIRED CONFINED SPACES

A. The contractor shall evaluate the project's work area(s) to determine if any spaces are permit-required confined spaces per the requirements of Federal Regulations Standards 29CFR 1910.146. If the work area(s) contains permit spaces, the Contractor shall inform all employees and subcontractor(s), by posting danger signs or by any other equally effective means, of the existence and location of, and the danger posed by, the permit spaces.

B. NOTE: A sign reading DANGER – PERMIT-REQUIRED CONFINED SPACE, DO NOT ENTER or using other similar language to satisfy the requirement for a sign.

C. If the Contractor decides that its employees and/or subcontractor(s) will not enter permit spaces, the Contractor shall take effective measures to prevent its employees and/or subcontractor(s) from entering the permit spaces and shall comply with paragraphs (c)(1), (c)(2), (c)(6) and (c)(8), of Federal Regulation Standards 29CFR 1910.146.

D. If the Contractor decides that its employees and/or subcontractor(s) will enter permit spaces, the Contractor shall develop and implement a written permit space program that complies with Federal Regulation Standards 29CFR 1910.146. the written program shall be available for review by employees and subcontractor(s). The written program shall also be available to the Owner's authorized representatives for information only.

E. The Contractor may use the alternate procedures specified in paragraph (c)(5)(ii) of the Federal Regulation Standards 29CFR 1910.146 for entering a permit space under the conditions set forth in paragraph (c)(5)(i) of the Federal Regulation Standards 29CFR 1910.146.

3.43 PROGRESS MEETINGS:

A. Contractor shall conduct regular project progress meetings on a monthly basis and at other times as requested by the Engineer or required by progress of the Work. Contractor, Engineer, and all subcontractors active on the site shall be represented at each meeting. Contractor may at his discretion request attendance by other parties involved in the project.

B. Contractor shall preside at the meetings. Meeting minutes will be prepared and distributed by Contractor. The purpose of the meetings will be to review the progress of the Work, maintain coordination of efforts, discuss changes in scheduling, and resolve other problems which may develop.

3.44 SUBSTANTIAL AND FINAL COMPLETION

A. When the work is substantially complete, Contractor shall notify the Owner and Engineer in writing that the entire work is substantially complete (operational or beneficial occupancy) and request that Engineer issues a certificate of substantial completion. Work which may remain uncompleted at substantial completion shall include only minor surface work relative to right-of-way restoration, sodding, seeding, pavement replacement, etc.

B. Upon written notice from Contractor to the Engineer and Owner that the entire work is complete within the time called out on the Bid the Engineer will make a final inspection with Owner and Contractor and will notify Contractor in writing all particulars of the project which are incomplete or defective. Contractor shall immediately take such measures as are necessary to complete such work prior to final payment.

3.45 PROJECT SIGNS

A. Furnish and install a standard sign at the plant entrance road during the duration of the work at that facility as required by EPA, ODEQ, OWRB (Funding & Regulatory Agencies). Utilize a professional sign painter to design and use colors prescribed by Engineer.

B. Install in locations approved by Owner.

C. Signs not listed in this Specification and/or drawings permitted only upon approval of Engineer.

3.46 ACCESS AND PARKING

A. Access to the plant site for construction personnel shall be through the construction entrance, if shown on the drawings. Otherwise, the Contractor will coordinate access to the site with the Operator and Engineer. At no time, shall the Contractor impede access to the plant site that will interfere with plant operations. Signs shall be installed to divert all traffic to that gate, including signs inside the plant site if needed. Location of job sign will be as directed by Owner.

3.47 REMOVAL OF UTILITIES, FACILITIES, AND CONTROLS

A. Remove temporary above grade or buried utilities, equipment, facilities, materials, prior to Final Inspection.

B. Remove underground installations to a minimum depth of two feet. Grade site as indicated.

C. Clean and repair damage caused by installation or use of temporary work.

3.48 MAINTENANCE / SPARE PARTS

A. The Contractor shall provide the Owner, upon acceptance of the equipment, all special accessories required to place each item of equipment in full operation. These special accessory items include, but are not limited to, the specified spare parts, adequate oil and grease required for the first lubrication of the equipment, light bulbs, fuses, hydrant wrenches, valve wrenches, valve keys, handwheels, chain operators for valve handles more than 6 feet above floor, and other expendable items as required for initial start-up and operation of all equipment.

3.49 TRANSFER OF UTILITIES

A. Transfer utilities to the Owner shall occur after Substantial Completion and owner taking beneficial use of the work.

B. Submit final meter readings for utilities and similar data as of the date the Owner occupied the work.

3.50 OCCUPANCY

A. Owner will occupy the premises during the entire period of construction for the conduct of his normal operations. Contractor shall cooperate with Owner in all construction operations to minimize conflict, and to facilitate Owner's usage.

B. As soon as any portion of the structure and equipment are ready for use, the Owner shall have the right to operate the portion upon written notice to the Contractor.

C. Testing of equipment and appurtenances including specified test periods, training, and start-up does not constitute acceptance for operation.

D. Owner may accept the facility for continued use after start-up and testing at the option of the Owner. If acceptance is delayed at the option of the Owner, shut down facilities per approved Operation and Maintenance procedures.

E. The execution of bonds is understood to indicate the consent of the surety to these provisions.

F. Provide an endorsement from the insurance carrier permitting occupancy of the structures and use of equipment during the remaining period of construction.

3.51 FINAL CLEANING

A. Perform final cleaning prior to inspections for Substantial Completion and again prior to Final Inspection on unoccupied portions.

B. Employ skilled workers who are experienced in cleaning operations.

C. Use cleaning materials which are recommended by manufacturers of surfaces to be cleaned.

D. Prevent scratching, discoloring, and otherwise damaging surfaces being cleaned.

E. Clean roofs, gutters, downspouts, and drainage systems.

F. Broom clean exterior paved surfaces and rake clean other surfaces of site work:
1. Police yards and grounds to keep clean.

G. Remove dust, cobwebs, and traces of insects and dirt.

H. Clean grease, mastic, adhesives, dust, dirt, stains, fingerprints, paint, blemishes, sealants, plaster, concrete, and other foreign materials from sight-exposed surfaces, and fixtures and equipment.

I. Remove non-permanent protection and labels.

J. Polish waxed woodwork and finish hardware.

K. Wash tile.

L. Wax and buff hard floors, as applicable.

M. Wash and polish glass, inside and outside.

N. Wash and shine mirrors.

O. Polish glossy surfaces to clear shine.

P. Vacuum carpeted and soft surfaces.

Q. Clean permanent filters and replace disposable filters when heating, ventilation, and air conditioning units were operated during construction.

R. Clean ducts, blowers and coils when units were operated without filters during construction.

S. Clean light fixtures and replace burned-out or dim lamps.

T. Probes, elements, sample lines, transmitters, tubing, and enclosures have been cleaned and are in like-new condition.

3.52 WARRANTY DATE

A. Treatment Plant and Equipment warranty shall begin only upon final acceptance of the entire WWTP project as a whole by Owner. Usage of equipment during startup, testing and completion of punch list prior to final inspection shall be considered as demonstration period. Equipment manufacturer and Contractor shall include the cost for using equipment during start up and testing to not be considered as beneficial occupancy in the bid for warranty. This will apply regardless of what is submitted and/or approved in manufacturer's submittal data / warranty data.

3.53 PROJECT RECORD DOCUMENTS / AS-BUILTS

A. Contract shall prepare and maintain record documents (as-builts) for the project to accurately reflect the construction as built. Documents must be submitted upon completion as a condition of final acceptance.
   1. Drawing Requirements
      a. Legibly mark contract drawings to record actual construction:
         1) Horizontal and vertical location of underground and under slab utilities and appurtenances referenced to permanent surface improvements.
         2) Location of internal utilities and appurtenances referenced to permanent surface improvements.
         3) Field changes of dimension and detail.
         4) Changes made by change order or field order.
         5) Details not on original contract drawings.
   2. Specifications Requirements
      a. Legibly mark specifications and addenda to record:
         1) Manufacturer, trade name, catalog number and supplier of each product and item of equipment actually installed;
         2) Changes made by change order or field order;
         3) Other matters not originally specified.

3.54 CLOSEOUT DOCUMENTS

A. Submit following Closeout Submittals upon Substantial Completion and at least 7 days prior to submitting Application for Final Payment:
   1. Evidence of Compliance with Requirements.
   2. Project Record Documents.
   3. Operation and Maintenance Manuals.
   4. Warranties and Bonds.
   5. Keys and Keying Schedule.
   6. Evidence of Payment and release forms as outlined in Contract Documents.
   7. Release of claims as outlined in Conditions of the Contract.
   8. Certificate of Final Completion.

3.55 LABOR STANDARDS

A. It is the responsibility of the Contractor to verify required wage rates for all anticipated laborer classifications prior to bid. Any discrepancies found by governing bodies and/or decisions rendered during construction will be borne by the Contractor. Owner assumes no responsibility nor oversight and is not a party to the labor requirements.

3.56 SCOPE OF WORK

A. The Contractor shall, except as otherwise specifically stated herein or in any applicable parts of these Contract Documents, provide and pay for all labor, materials, equipment, tools, construction equipment and other facilities and services necessary for proper execution, testing, successful start-up and completion of the Work.

B. Any part or item of the Work which is reasonably implied or normally required to make each installation satisfactorily and completely operable shall be performed by the

Contractor and the expense thereof shall be included in the bid price. It is the intent of these Specifications to provide the Owner with complete operable systems. All miscellaneous appurtenances and other items or work that are incidental in meeting the intent of these Specifications shall be considered as having been included in the bid price, even though these items may not be specifically called for in the Specifications.

C. The Work shall include all civil, architectural, structural, mechanical, HVAC, electrical and instrumentation work for complete and operable systems.
   1. See Section 01_10_00 Summary of Work

END OF SECTION

THIS PAGE INTENTIONALLY LEFT BLANK FOR DOUBLE SIDED PRINTING

SECTION 01_11_01

SEQUENCE OF CONSTRUCTION

PART 1 GENERAL

1.1 GENERAL REQUIREMENTS

A. The Owner's operations necessary to meet these requirements are of higher priority than construction activities. Schedules of connections, renovations and modifications shall be submitted to the Owner for approval, and all such items shall be coordinated throughout the entire construction period. These schedules shall permit full and normal treatment of wastewater including necessary delivery of chemicals.

B. The Contractor shall not operate any valves, gates, or equipment in the plant or yard piping system unless directed to do so by the Owner, and under the Owner's direct supervision. The Contractor shall schedule all valve or gate, operations with the Owner. Existing valves and gates should be expected to not seal completely or properly. Contractor shall provide any temporary containment and dewatering equipment, at no additional cost to the Owner, to perform the work.

C. Contractor shall maintain access to all plant facilities at all times.

D. Existing plugged pipelines, in which water or wastewater has been standing, may have to be cleaned of debris prior to connecting to a new pipeline or installing protective coatings and linings.

E. The Contractor shall submit shop drawings to show details of all temporary services, bypasses, tie-ins to existing systems, temporary chemical fill stations, and temporary roads. Shop drawings shall include size and type of all temporary and/or permanent equipment, piping, valving, controls and associated appurtenances.

1.2 PLANT SHUTDOWNS

A. This work may be concurrent with other work at the plant. Plant outages that may be required by other Contractors at the Treatment Plant will be coordinated by the Owner, and Engineer. In case of conflicts in scheduling work requiring shutdowns or partial outages at multiple facilities, the Owner will determine which treatment process shutdowns will be delayed.

B. The Contractor shall perform the work of the construction activities to accommodate normal plant operations with only minimal process interruptions necessary for process unit isolation, chemical feed application point piping, process piping, electrical connections, and chemical deliveries.

C. Influent flow to the facility cannot be completely shut down during any portion of the project. Flow Equalization Basins (FEBs) are available to store flow for short periods if a plant shutdown is needed. If the FEBs are used, the Contractor shall be responsible for all temporary pumping and for cleaning of the basins after use. To use the FEBs, the Contractor must comply with the coordination procedures discussed below.

D. Peak flow to the plant is 12 MGD. If a shutdown occurs during wet weather conditions, the Contractor shall have 12 MGD of pumping capacity on the site. The Contractor shall be responsible to pump at a sufficient rate as to prevent upstream sanitary sewer overflows. All peak flow temporary pumping shall be transported to the Flow Equalization Basin using either temporary piping to the basin or using temporary connections to the existing FEB Influent pipe as long as the temporary connection does not interfere with the operation of other facilities.

E. Regardless of the dates outlined herein, partial or total shutdown of any facility requires special coordination and planning with the Owner. The Contractor shall comply with the operational constraints of the facility during the shutdown periods.

F. The Contractor shall notify the Owner in writing at least 14 days in advance and again 3 days prior to beginning work on a particular area, and coordinate with the Owner the specific items to be isolated and the duration for each. Contractor shall obtain written approval from the Owner prior to each shutdown. High demand conditions creating the need for increased treatment plant flow may require the rescheduling of an approved shutdown or cancellation of work in progress. Emergency work may be accomplished without obtaining prior permission; however, Contractor shall notify onsite operators, Owner, and Engineer immediately of any emergencies.

G. At least fourteen (14) calendar days prior to partially or totally shutting down any facility, the Contractor shall submit to the Owner for review.
   1. A detailed description of the work to be performed.
   2. A schedule outlining the duration of each scheduled task and total duration of the shutdown.
   3. A list of all equipment and materials required to complete each task.
   4. Documentation that all manpower, equipment and materials necessary to complete each task are available on site.

H. A minimum of two working days prior to shutdowns, a special coordination meeting will be held with the Contractor, Owner, Engineer, and other parties (subcontractor) as requested by Owner to review procedures.

I. Prior to beginning work, the Contractor shall have on-site all materials, equipment, and personnel necessary to complete the work in the time scheduled. The Contractor shall also perform all possible tasks to the most complete state possible prior to shutdowns. All exposed bolts and nuts on valves or fittings that are to be disassembled shall be removed and replaced one at a time prior to shutdown to assure timely progress.

J. The Owner’s plant manager and/or his designee shall be responsible for directing shutdown operations. The Contractor shall provide any labor assistance necessary to complete shutdown operations including but not limited to:
   1. Operating gates and valves (under direction and supervision of the Owner's plant operating staff).
   2. Removing water, scale, mud and debris from pipelines and containing, pumping and conveying water, which will leak through existing gates and valves.

K. The Contractor shall work whatever hours are necessary to maintain schedules during shutdowns, at no additional cost to the Owner. While a facility is partially or totally shut down, the Contractor shall work 24 hours/day to minimize the shutdown period.

L. Failure of the Contractor to properly plan and perform the work in the prescribed manner may result in discharge of inadequately treated wastewater. In this case, the Contractor may be liable for payment of fines, fees or other charges imposed upon the Owner by state or federal regulatory agencies, and all other costs associated with the inadequately treated discharge.

1.3 SEQUENCE OF CONSTRUCTION

A. The following sequence is for information only and is intended to represent a general sequence of construction of major activities in which the Work can proceed. The following items are not necessarily in the order that construction will proceed. The sample sequence provided below is not intended to represent a complete work plan.

1. Establish SWPPP and storm water controls.
2. Locate existing utilities and piping and perform SUE.
3. Perform sequentially or simultaneously:
    a. Northside Improvements
    b. Southside Improvements (with the exception of FEB improvements)
    c. Conveyance Improvements
4. Conduct, at Northside WWTP
    a. Startup
    b. Performance Testing
    c. Functional Testing
    d. Clean Water Testing
    e. Operational Testing
5. Bring Northside WWTP fully online operated by City personnel
6. Conduct, at Southside
    a. Startup
    b. Performance Testing
    c. Functional Testing
    d. Clean Water Testing
    e. Operational Testing
7. Bring Southside fully online
8. Southside FEB Improvements
9. Startup & Test FEB Improvements
10. Southside Demolition
11. Northside Demolition

1.4 CONSTRUCTION CONSTRAINTS

A. The treatment plant must be capable of treating wastewater to a quality that complies with the discharge permit. Prior to demolition or decommissioning of existing treatment facilities, the proposed improvements for the main treatment process must be completed and accepted by the Owner.

B. At no additional cost to the Owner, the Contractor shall provide all temporary pumping and associated fuel necessary to temporarily bypass existing facilities as needed to construct proposed improvements.

C. At no additional cost to the Owner, the Contractor shall provide all temporary electrical and controls necessary to temporarily operate existing and proposed facilities as needed to construct improvements.

D. Demolition
   1. Contractor has the right to salvage demolished materials and equipment.
   2. When demolishing buildings and basins, the Contractor shall remove all concrete, piping and equipment. Removal of structures shall include removal of all equipment and concrete within 6-ft of the ground surface as well as the filling and compacting with soil of any openings to natural grade.
   3. Contractor is responsible for final dewatering of the basins.
      a. Grit, rags, biosolids and other residuals remaining in the basins being demolished shall be removed prior to demolition. These materials shall be disposed in accordance with applicable regulations.
      b. Wastewater from the basins may be returned to the head of the plant through the Flow Equalization Basins. The Contractor shall closely coordinate basin dewatering activities with the Operators to ensure the dewatering the basins will not adversely impact operations of the treatment plant.

E. Roads and Entrance
   1. During construction of the roads and entrance, Contractor shall maintain alternate routes and construct temporary roads to allow for operation of the plant and chemical deliveries.
   2. Prior to constructing any paving, all underground piping, culverts, and ductbanks shall be installed. Once paving is placed, no partial paving repairs are allowed. If Contractor must cut paving, the complete paving section between joints shall be replaced.
   3. During construction of the entrance, the Contractor shall maintain plant security in the area at all times.

F. Partial shut-downs for Electrical Tie-Ins shall not exceed 4-hours. Planning and approvals for partial shutdowns shall comply with this specification. Contractor is responsible to provide bypass pumping during the shutdowns.

G. Dewatering of structures, dewatering of piping connection points, and removal of obstructions shall be the full responsibility of the Contractor. The Contractor shall provide any additional bulkheads, dewatering equipment, or other protection as needed to allow installation of the improvements under proper conditions. Existing valves and gates may leak considerably or not hold at all. Pumping equipment, piping and valving and associated costs shall be borne by the Contractor at no additional cost to the Owner. The Contractor shall coordinate with the Owner on approved discharge locations, discharge quantity, discharge times and discharge durations. All dewatering operations required for construction are part of the overall "down time" for any of the recommended sequence steps in this specification. No additional time will be given for the dewatering operations.

H. For all construction activities removal and replacement of equipment or appurtenances, the replacement equipment and appurtenances must be on site prior to any demolition activities.

I. For all construction activities in the plant, vehicular access shall be maintained for Plant Staff to perform all daily operation and maintenance activities. If the Contractor determines that a roadway should be temporarily shut down, the Contractor must request and receive approval from the Owner in writing five (5) days prior to the closure of the road. The Contractor shall cover all the excavated pipe trenches with cover plates when not performing any construction activity in the pipe trenches. In addition, the Contractor shall also provide traffic rated closure plates at all times on the construction site to cover the excavated roads at the end of every construction day or within one (1) hour at Owner's request at any time during the work day to allow for movement of traffic over the excavated roads.

J. Contractor shall coordinate with the Owner on any other concurrent construction projects before any shutdown of any facilities or utilities.

K. Unless noted otherwise in the Contract Documents or in writing by the Owner, existing equipment and systems shall remain in place and operational until new equipment and systems are fully functional for at least 30 days and are accepted by the Owner.

PART 2 PRODUCTS (NOT USED)

PART 3 EXECUTION (NOT USED)

END OF SECTION

THIS PAGE INTENTIONALLY LEFT BLANK FOR DOUBLE SIDED PRINTING

SECTION 01_29_00

PAYMENT PROCEDURES

PART 5 GENERAL

5.1 SUMMARY

F. This Section describes the method by which the work will be measured and paid in accordance with the Bid Form.

G. It outlines how the work was divided into parts for ease of payment. The scope of each part, however, will primarily be as per the Drawings & Specifications.

H. The contents of this section shall complement the scope of work in the Contract Documents. If there is a conflict between the Specifications/Drawings and this section, the more stringent of the two requirements shall apply and be included in the Contractor's bid.

I. All provisions for payments in the Section apply to all Subcontractors and Suppliers.

J. The Contractor's lump sum bid price in the bid proposal shall include all construction cost associated with the completion of the project including but not limited to equipment, materials, tools, labor, insurance, goods, supplies, safety, fuel, rentals, maintenance, repairs, permits, legal fees, licenses, direct costs, indirect costs, overhead, and profit, and any other cost or expense incurred.

K. Work and materials not specifically set forth on the Bid Form shall be considered subsidiary obligations of Contractor and costs shall be included in the price bid. A Contractor who submitted a bid on this project must consider himself qualified to perform and prepare a bid for the work described in the Contract Documents and fully understand what work and materials are required to complete the project. The contract price proposal is to be full compensation for all work and materials needed to complete the project described in the Contract Document. Any work or materials not specifically called out in the Bid Form shall be incidental to the project. In preparing the bid for this project, Contractor shall request clarification from the Engineer for any item he feels may have been omitted from the Bid Form. The Contractor, who has done similar work who considers himself qualified to prepare the bid, by submitting his bid, acknowledges that the total price bid is adequate for completing the entire project described in the Contract Documents.

L. Progress payments will be based on the Engineer's observations and evaluations of quantities incorporated in the Work multiplied by the unit price.

M. Final payment for Work governed by unit prices will be made on the basis of the actual measurements and quantities determined by Engineer multiplied by the unit price for Work which is incorporated in or made necessary by the Work.

5.2 RELATED SECTIONS

F. Section 01_00_01 Basic Requirements

G. Section 01_33_01 General Submittal Requirements

H. The Contract Documents are a complete unit and complementary to each other. The individual Specification sections and other Contract Documents do not contain all cross references to "related work" or "related sections." It is the Contractor's responsibility to review the complete Contract Documents in order to properly scope, schedule and coordinate the work of any/all subcontractors, suppliers, and others on this project. Anything called out in one location of the Contract Documents is binding as if it were called out in all sections of the Contract Documents.

5.3 SUBMITTALS

F. Submittals for products and miscellaneous items in this specification section shall be submitted in accordance with Section 01_33_01 General Submittal Requirements and related submittal sections and provisions of the Contract Documents.

5.4 NONPAYMENT FOR REJECTED OR UNUSED PRODUCTS

F. Payments will not be made for the following:
1. Loading, hauling and disposing of rejected materials
2. Quantities of materials wasted or disposed of in a manner not called for by the Contract Documents
3. Rejected loads of material, including material rejected after it has been placed by reason of failure of the Contractor to conform to provisions of the Contract Documents.
4. Defective work not accepted by Owner
5. Material remaining on hand after completion of work.

5.5 ALLOWANCES

F. Allowance items in the Bid Form shall be used to pay the Contractor for specific Owner preferred products or services that are not included in the Base Bid. Allowance items may only be used upon written authorization from the Engineer. The actual amount of the allowance total authorized whether higher or lower shall adjust the final Payment Amount.
1. The allowance is not intended to be used to procure payments for items covered in the Contract Documents.
2. Expenditure of the allowance is at the sole discretion of the Engineer.
3. The allowance may be used in full or in part as the Engineer deems necessary.
4. If no extra work is identified and approved by Engineer, the allowance will not be expended.

G. Procedure:
1. Prior to initiating any item of extra work under the Allowances, Owner, Engineer, and Contractor will agree to the scope of work to be performed and the amount of payment to be made for a particular item of extra work under consideration.

H. Payment: Lump sum based on actual work completed.

I. Costs included in allowances for furnishing products only:
1. Net cost of product.
2. Delivery and unloading at site.

3. Applicable taxes if any.
4. Other expenses as required to furnish products.

J. Costs included in allowances for furnishing and installing products:
1. Net cost of product.
2. Delivery and unloading at site.
3. Applicable taxes, if any.
4. Handling at site, including uncrating and storage.
5. Protection from elements and from damage.
6. Labor, installation, testing, and finishing.
7. Other expenses required to complete installation.

K. The Contractor's overhead, profit, insurance, sales tax, bond expense and any other expense for allowance items (not included in items above) shall be included in the Contractor's Lump Sum Bid.

L. No payment will be made for nonproductive time on the part of the Contractor for delays in processing or installation of an allowance item.

PART 6 PRODUCTS (NOT USED)

PART 7 EXECUTION

7.1 BID ITEMS

F. This section covers the components considered to be a portion of each Bid Items as may or may not be listed in the Bid Schedule and is furnished to aid the Contractor in preparing his bid.
1. Of necessity, the items described as components of the various items are discussed in a general manner only, describing the major pieces of equipment and/or materials.
2. Any items and/or appurtenances not specifically mentioned shall be considered a portion of the bid item to which, in the opinion of the Engineer, its function is most directly related.
3. Failure to list all items and/or appurtenances does not relieve the Contractor from furnishing all apparatuses, devices, labor, or materials of whatever nature required for a complete and operating installation in accordance with the intent of the Drawings, approved Shop Drawings, and the Specifications.

G. Estimated Quantities
1. Where estimated quantities are shown for the various classes of work to be done and material to be furnished under this contract, they are approximate and are to be used only as a basis for estimating the probable cost of the work and for comparing the proposals offered for the work.
2. It is understood that the actual amount of work to be done and material to be furnished under this contract may differ somewhat from these estimates, and that where the basis of payment is the unit price method, payment shall be made for the actual amount of work done and the material furnished.

H. General Bid Items #1-#14

1. SWPPP & Erosion Control

a. Description

1) This item shall include the development, design, implantation and all necessary labor, materials, and equipment to provide SWPPP for the duration of the project. This includes all fees associated with, but not limited to, preparation of the SWPPP, review and permitting fees, installation and maintenance of the SWPPP items, fines, and other incidental items as described in the specifications.

2) This item shall include the filing of any/all required notices including, but not limited to, the Notice of Intent (NOI) and Notice of Termination (NOT) with the appropriate Regulatory agencies.

3) If project duration changes due to changes by the Owner, no additional payment will be made to the Contractor.

b. Measurement

1) Measurement will be made on a lump sum (LS) basis.

c. Payment

1) Payment will be made on a lump sum (LS) based on percentage complete of sewermain. Payment shall be allowed for 25% of the lump sum bid price upon receipt of the plan by the Owner. The remaining 75% of the lump sum bid price shall be paid monthly and calculated as the total lump sum amount divided by the contract time (in months).

2) Payment shall be total compensation for furnishing all design, materials, tools, equipment, labor and any other incidentals necessary to complete the work.

d. Additional Information

1) No exceptions will be made to the lump sum price established by the Contractor.

2. Mobilization, Demobilization, Bonds & Insurance

a. Description

1) This item shall consist of the establishment of offices and other facilities on the Site and the movement of personnel, construction equipment and supplies to the Site or to the vicinity of the Site in order to enable the Contractor to begin the Work. This item also includes all costs associated with bonding and insurance.

b. Measurement

1) Measurement will be made per lump sum

2) The maximum bid for this item shall be 5% of the total amount bid including alternates.

c. Payment

1) Payment shall be on a lump sum basis at no greater than the maximum price allowed. The maximum amount shown in the proposal is the amount allowed to assist the Contractor in defraying the initial cost of operations. Partial payment will be made as follows provided the amount does not exceed 5% of the total amount bid for the project:

a) When 1% of the adjusted contract amount for construction items is earned, 50% of the item lump sum will be paid.

b) When 50% of the adjusted contract amount for construction items is earned, 80% of the item lump sum will be paid. Previous payments under this Item will be deducted from this amount.

c) When 100% of the adjusted contract amount for construction items is earned and the final inspection has been completed, 100% of the item lump sum will be paid. Previous payments under this Item will be deducted from this amount.

d. Additional Information

1) It is not intended that the lump sum amount allowed will cover all costs for bonds, insurance, mobilization, and other costs associated with project start-up. Cost in excess of the amount shown shall be included in the unit price bid for individual construction items.

2) No exceptions will be made to the lump sum price established by the Contractor.

3. Construction Staking

a. Description

1) This item shall consist of furnishing all labor, equipment and materials necessary to layout and maintain sufficient control and monuments for construction staking for the installation of improvements to the lines and grades shown on the Drawings and associated easements. Due to the nature of this work, staking may be performed multiple times without additional compensation. Price bid should also include any As-Built survey requirements.

2) Construction staking shall be performed by a Oklahoma licensed surveyor. Unless it is adequately justified and approved by the Engineer, Contractor shall utilize the services of the surveyor responsible for the design survey to execute Construction staking on the project. Construction work shall be staked and the stakes periodically checked for horizontal and vertical control accuracy throughout construction. Temporary benchmarks shall be set to expedite construction. Foundation locations, building comers, finished floor elevations, slab levels, line alignments, structure locations, pipe penetrations, etc., shall be confirmed and checked by the licensed surveyor and the accuracy of the construction survey shall be certified.

b. Measurement & Payment

1) Measurement and payment will be made on a lump sum basis based on the percent complete

c. Additional Information

1) No exceptions will be made to the lump sum price established by the Contractor.

4. Traffic Control Plan & Implementation

a. Description

a) This item shall include all necessary labor, materials, and equipment to provide traffic control for the duration of the project. This includes all fees associated with, but not limited to, preparation of the traffic control plan, review

and permitting fees, installation and maintenance of the traffic control devices, fines, and other incidental items as described in the specifications.

b) If project duration changes due to changes by the Owner, no additional payment will be made to the Contractor.

c) Item includes obtaining approvals by governing authorities, required traffic control for ODOT installation and permitting requirements, preparation and submittal of traffic control plan and subsequent approval from Owner and any other entity prior to commencing work in their right-of-way.

d) Provisions for traffic control devices that may include barrels, barricades, control panels, signage including arrow boards, temporary striping, low profile concrete barriers, temporary relocating of existing traffic signs, control devices, and mailboxes and placing beyond the proposed pavement, maintaining access to driveways, and provision of equipment and personnel as necessary to protect the work and the public in accordance with the Manual of Uniform Traffic Control Devices (MUTCD).

e) The traffic control plans will be submitted to Owner for review and approval prior to traffic control devices being set in place. Construction will not begin until the traffic control plan has been approved and the traffic control devices are in place.

f) It is the Contractor's responsibility to provide an all-weather access to residents and such costs shall be included in the traffic control pay item. Temporary driveways shall utilize crushed concrete, asphalt millings, or select fill topped with 6 to 8 inches of crushed concrete or asphalt millings. The Contractor is responsible for maintaining the driveways during construction.

g) No separate payment will be made for flaggers or uniformed officer as required for the Project. Flaggers or uniformed officer shall be considered incidental to the traffic control and regulation bid item.

b. Measurement
   1) Measurement will be made on a lump sum basis

c. Payment
   1) Payment will be made on a lump sum basis (LS) and shall be total compensation for furnishing all materials, tools, equipment, labor and any other incidentals necessary to complete the work.

d. Additional Information
   1) No exceptions will be made to the lump sum price established by the Contractor.

5. Trench Safety System
   a. Description
      1) This item shall include the development, design, and implementation as required by the Occupational Safety and Health Administration (OSHA) and the assumption of responsibility for the system.

2) No additional payment shall be made for rented equipment, Contractor's equipment, or materials used or damaged during the installation, use, and/or removal of equipment and materials whether owned, rented, or leased by the Contractor or his subcontractors.
3) No evaluation of the adequacy of the trench safety systems used by the Contractor shall be made by the Engineer. The means, methods and responsibility for trench safety rests solely with the Contractor.
4) By approving the Contractor's request for payment of excavation safety, the Engineer makes no representation that the Contractor's work for this pay item has been performed in a manner consistent with the Contract Documents and/or local, State, or Federal laws.

b. Measurement
1) Measurement will be made per lump sum for the design and implementation of the system for the duration of the project.

c. Payment
1) Payment shall be made on a lump sum basis (LS) and shall be total compensation for furnishing design and all materials, tools, equipment, labor and any other incidentals necessary including removal of the system.

d. Additional Information
1) No exceptions will be made to the lump sum price established by the Contractor.

6. Materials Testing & Disinfection
a. Description
1) This item shall consist of furnishing all labor, equipment and materials necessary to perform construction quality assurance testing and disinfection. Testing shall include, but not be limited to, soil compaction, concrete, strength and slump test, testing of concrete materials, aggregate, manhole testing, mandrel, pressure testing, disinfection and other testing as required and specified by the Contract Documents. Copies of test results shall be sent to the Engineer and Owner immediately after completion and recording of test results. Testing company shall be approved by the Engineer prior to beginning construction.

b. Measurement & Payment
1) Measurement and payment shall be made on a lump sum basis (LS) based on percent complete and shall be total compensation for furnishing all materials, tools, equipment, labor and any other incidentals necessary to complete the work.

c. Additional Information
1) No exceptions will be made to the lump sum price established by the Contractor.

7. CCTV Security System
a. Description
1) This item shall consist of furnishing all labor, equipment and materials necessary to design & install a CCTV security system in accordance with the Specifications.

b. Measurement & Payment

1) Measurement and payment shall be made on a lump sum basis (LS) based on percent complete and shall be total compensation for furnishing all materials, tools, equipment, labor and any other incidentals necessary to complete the work.

c. Additional Information

1) No exceptions will be made to the lump sum price established by the Contractor.

8. Waste Sludge Handling and Disposal

a. Description

1) This item shall include all necessary labor, materials, and equipment to dispose of Waste Sludge in full compliance with the Specifications.

b. Measurement and Payment

1) See Section 33_01_33 for additional details.

9. Hydroexcavation for Utilities Location

1) This item shall include all necessary labor, materials, equipment and costs necessary for the excavation using hydroexcavation or other similar non-destructive methods to confirm locations of existing utilities related to the construction. The lump sum price bid shall include full compensation for excavation of existing for utilities as required to verify/confirm location, depth, size, material, joint type and any other information necessary at all necessary locations whether or not shown on drawings.

2) Existing features shown on the plans are based upon existing construction plans, as-builts and other information available during design. It shall be the Contractor's responsibility to locate (horizontally and vertically) all existing franchise utilities, waterlines, sanitary sewer lines, storm drains, pavement, curbs, retaining walls, and all other existing utilities and facilities, prior to manufacture and installation of the pipelines and appurtenances. Any conflicts determined shall be reported to the Engineer.

3) Hydroexcavation are to be used on an as-needed basis. Extents and locations to be approved by the Engineer.

b. Measurement

1) Measurement will be made per lump sum

c. Payment

1) Payment will be made on a lump sum (LF) of hydroexcavation perro

2) Payment shall be total compensation for furnishing all materials, tools, equipment, labor and any other incidentals necessary to complete the work.

10. Allowance Items #10 - #14

a. Amount shown is an estimated amount to be included in the Base Bid with final payment based on actual costs.

b. Work Change Directives

1) Allowance to be used for miscellaneous work on a change authorization basis required during completion of the project to be solely at the discretion of the Owner & Engineer.

c. New Electric Service Extension

1) Allowance to compensate for cost paid direct to electric service provider for service extension from power to service meter at Northside WWTP & Southside WWTP.

d. Lab Equipment
   1) Allowance to for owner selected lab equipment.

e. Furniture, Fixtures & Equipment
   1) Allowance to materials to furnish and install Owner selected FFE.

f. Rock Removal
   1) Allowance to compensate for Rock Removal where the quality differs substantially from the information provided in the bid proposal requiring removal by non-conventional means.
   2) Will be paid as labor and equipment.

I. Northside Bid Items #15 - #46
   a. Description
      1) Lump sum bid items for Northside Wastewater Treatment Plant Improvements.
      2) All associated construction costs shall be grouped into the most appropriate lump sum item
   b. Measurement
      1) Measurement will be made per lump sum
   c. Payment
      1) Payment shall be made on a lump sum basis (LS) based on % complete.
   d. Additional Information
      1) No exceptions will be made to the lump sum price established by the Contractor.

J. Collection System Lift Station Controls & SCADA Bid Item #47
   a. Description
      1) Lump sum bid item for improvements made to Collection System lift stations outlined in the Drawings and should represent all work required on the Collection System Lift Station as required by the Contract Documents.
      2) Work to be provided turn-key by System Integrator.
   b. Measurement
      1) Measurement will be made per lump sum
   c. Payment
      1) Payment shall be made on a lump sum basis (LS) based on % complete.
   d. Additional Information
      1) No exceptions will be made to the lump sum price established by the Contractor.

K. Southside Bid Items #48 - #67
   a. Description
      1) Lump sum bid items for improvements at the Southside Improvements.
      2) All associated construction costs shall be grouped into the most appropriate lump sum item
   b. Measurement

1) Measurement will be made per lump sum

c. Payment

1) Payment shall be made on a lump sum basis (LS) based on % complete.

d. Additional Information

1) No exceptions will be made to the lump sum price established by the Contractor.

L. Conveyance Bid Items #68 - #80

68. Sewerline Restoration

a. Description

1) This item shall include all necessary labor, materials, and equipment necessary for restoring any disturbed areas impacted by construction activities where no specific bid items existing in the Bid Form. The lump sum price shall include full compensation for restoring the construction areas to pre-existing conditions.

2) Restoring (including temporary relocation where necessary) of:

a) storm drainage swells
b) ditches
c) structures
d) banks
e) sloped pipes
f) end treatments
g) signs
h) fences
i) mailboxes
j) landscaping
k) any other items whether or not shown or specifically noted on the Drawings

3) Replacement of items removed and/or disturbed during construction including:

a) riprap
b) gravel drives
c) asphalt pavement & drives
d) sloped pipes
e) end treatments
f) signs
g) concrete pavement & drives
h) curb & gutter
i) landscaping
j) fencing
k) trees outside construction area not detailed for removal
l) any other items impacted by proposed work whether or not shown or specifically noted on the Drawings

4) This item includes full compensation for all full width pavements replacement on Brangus Road beginning at approximate Station 164+00 (paving to be included in Sewermain Restoration.)

5) Any other restoration activities required that are not included in another specific bid item of the Bid Form.

6) It is the contractor's responsibility to accurately quantify the work required prior to bid to be included in the lump sum bid amount.

7) All restoration shall be to original or better conditions.

b. Measurement
   1) Measurement will be made per lump sum

c. Payment
   1) Payment will be made on a lump sum (LS) based on percentage complete
   2) Payment shall be total compensation for furnishing all materials, tools, equipment, labor and any other incidentals necessary to complete the work.

d. Additional Information
   1) No exceptions will be made to the lump sum price established by the Contractor.

69. Site Preparation

a. Description
   1) This item shall consist of the preparation of the project site and those areas adjacent to or offsite as may be designated on the plans for construction operations. This work shall include the removal of all obstructions and materials not designated on the plans to remain in place and particular items designated on the plans to be removed for which no pay item is listed in this proposal. This shall include, but not be limited to: signs, sprinkler systems, landscaping, trees, underbrush, vegetation, retaining walls, light standard, fences, gates, sidewalks, driveways, both concrete and asphalt pavement, base rock, concrete curb and gutters, drainage pipe and structures, above ground and below ground utilities and other structures. Approximate quantities of pavement removal are shown on the Drawings but represent an estimate only. Exact quantities to be removed shall be field determined by Contractor prior to bid. All pavements to be removed shall be sawcut. There is no additional pay for sawcutting. The maintenance and/or relocation of street signs and mail boxes shall be considered as part of this item.
   2) This item also includes payments from grading and drainage as required to re-establish existing grade after required removal and installation of sewermain.
   3) This item includes full compensation for all full width pavements removal, grading, drainage, and other miscellaneous costs associated with complete removal of pavement on Brangus Road beginning at approximate Station 164+00 (paving to be included in Sewermain Restoration.)
   4) It is the Contractor's responsibility to coordinate with utilities to avoid conflicts.
   5) Unless otherwise noted with a specific pay item in the proposal, no separate payment will be made for the removal or relocation of existing structures within the limits of construction.
   6) Any existing improvement shown to remain, which is damaged or destroyed by these operations, shall be replaced at the Contractor's expense

b. Measurement
   1) Measurement will be made per lump sum

c. Payment

1) Payment will be made on a lump sum (LS) based on percentage complete
2) Payment shall be total compensation for furnishing all materials, tools, equipment, labor and any other incidentals necessary to complete the work.

d. Additional Information
1) No exceptions will be made to the lump sum price established by the Contractor.

70. Special Survey for Easement Staking
a. Description
1) This item shall consist of furnishing all labor, equipment and materials necessary to layout and stake all easements and ROW for the entire extent of the sewermain.
2) Easement staking shall be performed by a Oklahoma licensed surveyor.
b. Measurement & Payment
1) Measurement and payment will be made on a lump sum basis based on the percent complete
c. Additional Information
1) No exceptions will be made to the lump sum price established by the Contractor.

71. Subsurface Utility Engineering
a. Description
1) Perform Subsurface Utility Engineering as outlined in the Specification Section 02_21_20. Critical Locate Area stationing where SUE is to be performed is contained in the Specification. Spot locations where SUE is to be performed is defined on the Drawings.
b. Measurement & Payment
1) Measurement and payment will be made on a lump sum basis based on the percent complete.
c. Additional Information
1) No exceptions will be made to the lump sum price established by the Contractor.

72. 24" DR11 HDPE Forcemain (Direct Bury)
a. Description
1) Installation of 24" DR11 HDPE by direct bury.
2) This item shall include all necessary labor, materials, and equipment to include pipe, pipe delivery and storage, fittings, warning tape, excavation, backfill, jointing of pipe by fusion, thrust blocks, and other appurtenances necessary to construct sewermain piping in full compliance and as detailed in the Contract Documents.
b. Measurement
1) Measurement will be made per lump sum
c. Payment
1) Payment will be made on a lump sum (LS) based on percentage complete
2) Payment shall be total compensation for furnishing all materials, tools, equipment, labor and any other incidentals necessary to complete the work.

3) No extra payment shall be allowed for excavation in the various types of soils or rock encountered, bedding, or backfill compaction.

73. Bid Items #73 - #75 & Bid Item 79
    a. Description
        1) Installation of 24" / 30" DR11 HDPE by Bore. Method of encasement is outlined in Bid Proposal and on Drawings.
    b. Measurement
        1) Measurement will be made per lump sum
        2) Bore length shown on the Drawings are ESTIMATED and should be field verified by Contractor prior to bidding.
        3) Contractor may elect to open cut any sections outlined for bore with exception of highway, rail and utility crossing scheduled for boring.
        4) Contractor may elect to bore any section scheduled for open cut. Positive grade must be maintained toward air/vac valves. Surface repair would not be required in areas of boring.
    c. Payment
        1) Payment will be made on a lump sum (LS) based on percentage complete
        2) Payment shall be total compensation for furnishing all materials, tools, equipment, labor and any other incidentals necessary to complete the work.
        3) No extra payment shall be allowed for excavation in the various types of soils or rock encountered, bedding, or backfill compaction.

76. Combination Air/Vac Valve in Vault (24")
    a. Description
        1) This item shall include all necessary labor, materials, and equipment to provide air/vac valve assembly at the approximate location specified on the Drawings. Exact location to be coordinated with Engineer and shall be at the localized high point of the sewermain.
        2) The cost of all components shown on the Drawings Detail and any miscellaneous required components not specifically shown shall be included in the bid price. This includes, but not limited to, survey layout, excavation and backfill, bedding, surface repair, acquisition, delivery, and storage of the air/vac valves, vault, and other incidental items as described in the specifications and shown on the plans.
    b. Measurement
        1) Measurement will be made per lump sum
    c. Payment
        1) Payment will be made on a lump sum (LS) based on percentage complete
        2) Payment shall be total compensation for furnishing all materials, tools, equipment, labor and any other incidentals necessary to complete the work.
        3) No extra payment shall be allowed for excavation in the various types of soils or rock encountered, bedding, or backfill compaction.

77. Combination Air/Vac Valve in Vault (30")
    a. Description
        1) This item shall include all necessary labor, materials, and equipment to provide air/vac valve assembly at the approximate location specified on the Drawings. Exact location to be coordinated with Engineer and shall be at the localized high point of the sewermain.
        2) The cost of all components shown on the Drawings Detail and any miscellaneous required components not specifically shown shall be included in the bid price. This includes, but not limited to, survey layout, excavation and backfill, bedding, surface repair, acquisition, delivery, and storage of the air/vac valves, vault, and other incidental items as described in the specifications and shown on the plans.
    b. Measurement
        1) Measurement will be made per lump sum
    c. Payment
        1) Payment will be made on a lump sum (LS) based on percentage complete
        2) Payment shall be total compensation for furnishing all materials, tools, equipment, labor and any other incidentals necessary to complete the work.
        3) No extra payment shall be allowed for excavation in the various types of soils or rock encountered, bedding, or backfill compaction.
78. 30" DR11 HDPE Forcemain (Direct Bury)
    a. Installation of 30” DR11 HDPE by direct bury.
        1) This item shall include all necessary labor, materials, and equipment to include pipe, pipe delivery and storage, fittings, warning tape, excavation, backfill, jointing of pipe by fusion, thrust blocks, and other appurtenances necessary to construct sewermain piping in full compliance and as detailed in the Contract Documents.
    b. Measurement
        1) Measurement will be made per lump sum
    c. Payment
        1) Payment will be made on a lump sum (LS) based on percentage complete
        2) Payment shall be total compensation for furnishing all materials, tools, equipment, labor and any other incidentals necessary to complete the work.
        3) No extra payment shall be allowed for excavation in the various types of soils or rock encountered, bedding, or backfill compaction.
80. Connect 30" HDPE to Existing 24" Ductile Iron Sewermain
    a. Description
        1) This item shall include all necessary labor, materials, and equipment to connect proposed 30” HDPE sewermain to existing 24” Ductile Iron Sewermain.

2) Any miscellaneous removals or associated work required due to exact field conditions at individual connections locations shall be verified by contractor and included in the price bid.
3) All fittings, valves and miscellaneous components required shall be included in the price bid whether or not shown on Drawings.
4) Connections shall include all fittings, concrete, blocking, dewatering, trenching, bypass pumping, bedding materials, backfilling, boots, grouting, seals, and incidentals as required to complete the connection.

b. Measurement
1) Measurement will be made per lump sum

c. Payment
1) Payment will be made on a lump sum (LS) based on percentage complete
2) Payment shall be total compensation for furnishing all materials, tools, equipment, labor and any other incidentals necessary to complete the work.
3) No extra payment shall be allowed for excavation in the various types of soils or rock encountered, bedding, or backfill compaction.

END OF SECTION

THIS PAGE INTENTIONALLY LEFT BLANK FOR DOUBLE SIDED PRINTING

SECTION 01_32_34

PHOTO & VIDEO LOG

PART 1 GENERAL

1.1 SUMMARY OF WORK

A. It is the intent of this section to provide documentation of conditions of existing facilities / site prior to construction and post construction along with monthly progress pictures.

B. Provide a video recording with audio and narration or detailed labeled photographs of the site prior to the beginning of construction. The narration/label shall describe what is being shown in the video/photo.
   1. Record the condition of all existing facilities in or abutting the construction area (right-of-way) including but not limited to streets, curb and gutter, utilities, driveways, fencing, landscaping, etc.
   2. Record after construction staking is complete but prior to any clearing where possible.
   3. Record condition of any existing facility to be modified / replaced.
   4. Take photographs of all work in progress monthly
   5. Provide one copy of the photos/recording, dated and labeled to the Engineer before the start of construction. Provide additional photos/recording as directed by the Engineer if the photos/recording provided is not considered suitable for the purpose of recording conditions prior to construction.

C. Upon completion, furnish an adequate number of photographs of the Site to clearly depict the completed project.
   1. Provide a minimum of ten different views of each location.
   2. Photograph a panoramic view of the entire project site.
   3. Photograph all significant areas of completed construction.
   4. Take photographs/videos at same locations as prior to construction.
   5. Completion photographs are not to be taken until all construction trailers, excess materials, trash, and debris have been removed.

D. Additionally, furnish aerial photographs as follows:
   1. Provide aerial photographs of the completed Project from an angle and height to include the entire Site.
   2. Provide a minimum of four different views.
   3. Photograph a panoramic view of the entire Site.
   4. Photograph all significant areas of completed construction.
   5. Do not take completion photographs until all construction trailers, excess materials, trash, and debris have been removed.
   6. Employ a professional photographer approved by the Engineer to photograph the Project.
   7. Provide aerial photographs of the completed Project. Include one photograph for each 1,000 linear feet of the Project with adequate overlap to provide a continuous photograph of the Project without gaps. Each photograph should be taken from approximately the same distance above ground and that the same angle to provide a consistent perspective.

E. All photographs, video recordings, and a digital copy of this media are to become the property of the Owner. Photographs or recordings may not be used for publication, or public or private display without the written consent of the Owner.

1.2 SUBMITTALS

A. Pre-construction photographs and videos: Submit prior to beginning work at the Project site or prior to the Preconstruction Conference in accordance with Section 01_33_01 General Submittal Requirements.

B. Post-construction photographs and videos: Submit with project closeout documents

1.3 QUALITY ASSURANCE

A. Provide clear photographs and recordings taken with proper exposure. View photographs and recordings in the field and take new photographs or recordings immediately if photos of an adequate print quality cannot be produced or video quality is not adequate. Provide photographs with adequate quality and resolution to permit enlargements.

PART 2 PRODUCTS

2.1 VIDEOS

A. Provide in digital format with a minimum resolution of 1080p.

B. Provide a digital copy on DVD to Engineer prior to preconstruction conference.

2.2 PHOTOGRAPHS

A. Provide photographs in digital format with a minimum resolution of 1280 X 960, accomplished without a digital zoom.

B. Take photographs at locations to adequately depict conditions prior to beginning construction and after completion.

C. Provide a digital copy on a DVD or thumb drive of each photograph taken.

D. Identify each digital file name with:
1. Project name.
2. Date, time, location, and orientation of the exposure.
3. Description of the subject of photograph.

PART 3 EXECUTION (NOT USED)

END OF SECTION

SECTION 01_33_01

GENERAL SUBMITTAL REQUIREMENTS

PART 1 GENERAL

1.1 SUBMISSION FORMAT

A. The Contractor shall submit to the Engineer for review / comment a PDF copy of all submittals and shop drawings by email. Comments will be returned in email to sender. Upon approval and after making any revisions required, the Contractor shall submit six (6) hard copies of same for distribution. Approvals to preclude purchase, fabrication, or shipment to the project site. Two (2) copies will be returned to the Contractor. If more copies are required, then additional copies should be submitted.

B. All transmittals must be from Contractor and bear approval stamp on the submittal item. Transmittals will not be received from or returned to subcontractors. Shop drawing transmittal stamp shall read:

1. *"(Contractor's Name)" has determined and verified/checked all field dimensions and measurements, field construction criteria, tolerances, clearances, quantities, materials, fabrication processes, catalog numbers, similar data, and any/all other provisions outlined in the Contract Documents and hereby certifies compliance thereto. Any deviations from Contractor Documents have been itemized in summary in a page to follow and detailed on specific submittal pages. It is also understood that Engineer review / approval is for design conformity and general conformance only and in no way releases Contractor from adherence to the full requirements of the Contract Documents.*

C. Transmittals received will be initially reviewed to ascertain inclusion of Contractor's approval stamp. Drawings not stamped by the Contractor or stamped with a stamp containing language other than that specified in 1.1B will not be reviewed for technical content and will be returned without any action.

D. Submittals are to be sequentially numbered followed by Specification section and name in the following format:

1. **01 – Spec Section Title (example: "06 – 33_05_25 Steel Casing Pipe")**
2. **Subsequent revisions may be numbered with the revision number. (Example "06 Rev 1 – 33_05_25 Steel Casing Pipe."**
3. **Submittals not pertaining to a specific Specification section can have the section number replaced with the term "No Spec Section." (example: "06 – No Spec Section – HDPE Casing Pipe."**
4. **Submittals not numbered in accordance with this Specification will not be reviewed for approval.**
5. **Submittals for separate Specifications sections <u>may not be</u> combined into a single submittal document.**

1.2 PRODUCT SUBMITTALS AND SHOP DRAWINGS

A. Identify Project, Contractor, subcontractor and supplier; pertinent drawing and detail number, and specification section number, as appropriate.

B. Provide submittal information defining specific equipment or materials utilized on the project. Generalized product information not clearly defining specific equipment or materials to be provided will be rejected.

C. Apply Contractor's stamp, signed or initialed certifying that review, approval, verification of products required, field dimensions, adjacent construction Work, and coordination of information is in accordance with the requirements of the Work and Contract Documents.

D. For each submittal for review, allow 15 days excluding delivery time to and from the Contractor.

E. Identify variations from Contract Documents and product or system limitations which may be detrimental to successful performance of the completed Work.

F. A letter certifying full and complete compliance with the Specifications, Drawings and other project requirements. The letter shall list any exceptions to or deviations from specified requirements, if any, and reasons for same. Exceptions or deviations shall also be clearly marked in a separate color in submittals. If the submittal includes a deviation that is not clearly noted in the letter and the Engineer does not explicitly accept the deviation in a response letter, the deviation is not approved and the Contractor is obligated to perform the work as stipulated in the drawings and specifications at no additional cost to the Owner or Engineer.

G. Provide space for review stamps.

H. When revised for resubmission, identify all changes made since previous submission.

I. Distribute copies of reviewed submittals as appropriate. Instruct parties to promptly report any inability to comply with requirements.

J. Submittal data shall be in such form and so presented that the Engineer may readily review the data. This means that submittals must be bound in an 8-1/2 by 11 format. Engineering drawings are to be reduced to an 11 by 17 format, folded and bound with the submittal. Bound submittals shall be for individual specification sections and shall be complete by section.

K. Approval by Engineer indicates general compliance or acceptability; however, it does not relieve the Contractor of final responsibility for proper dimensions, character, quantity, quality, strength or sufficiency of the items involved.

L. Waivers, or exceptions, to the Plans and Specifications may be validated only in writing by the Engineer. Written validation will specifically identify the feature in question and no such waiver or exception shall be assumed as a result of omissions or oversights in examining and approving the above drawings or other materials.

M. Any equipment installed by the Contractor, not formally approved by the Engineer, shall be at the Contractor's risk if it is found that the installed equipment does not conform to the Specifications or manufacture’s requirements / guidelines.

N. Contractor at a minimum must submit sufficient information to determine:

1. Conformance to specifications, including: kind, type size, arrangement, finishes, and operation of component materials, and devices.
2. Conformance to Contract Documents, including dimensions, orientation, appearance, external connections and anchorages, installation clearances.
3. Specific purpose or design conditions and adequacy to meet same: weights, dynamic, loads, supports required, operating characteristics.
4. Coordination with other work, including items needed by this trade, but furnished by others, and information needed by others to perform their part.
5. Delivery Date:
    a. Include if product / material delivery delay could potentially impact construction schedule.
    b. This should be stated as a firm date of delivery, not measured from approval of drawings to date of shipping. For this purpose, the time taken by the Engineer to process data may be taken as not exceeding 21 calendar days. The Engineer does not assume responsibility for correctness or completeness of the data; however, the Contractor should determine that proposed delivery dates will not cause delay or result in failure to complete the project on time.
    c. No extension of time or waiver of liquidated damages will be granted due to failure to deliver on time unless the Contractor presents written evidence that favorable delivery is not obtainable for an acceptable item.
    d. Such evidence will be considered as a basis for extension of time only when presented promptly after award of contract.
    e. Failure of contractor to include a delivery date waives any future claim for time extensions. The Engineer does not assume responsibility for verifying inclusion of delivery date in submittal nor review of contractor's schedule.

PART 2 PRODUCTS (NOT USED)

PART 3 EXECUTION (NOT USED)

END OF SECTION

THIS PAGE INTENTIONALLY LEFT BLANK FOR DOUBLE SIDED PRINTING

SECTION 01_33_02

PRE-BID EQUIPMENT SUBMITTAL REQUIREMENTS

PART 1 GENERAL

1.1 SCOPE OF WORK

A. The contractor is required to utilize equipment on this project as specified herein by manufacturer or identified by brand name, or which has been prior approved by the engineer as the owner's representative, utilizing the pre-bid submittal process specified herein. No exceptions.

B. The three (3) apparent low bidders will be required to complete and execute 00_41_16 List of Manufactures of these Contract Documents within 48 hours of bid opening date / time. This form governs major equipment only. Any equipment not contained on 00_41_16 will still be subject to requirements of this Section.

1.2 SPECIFIED EQUIPMENT

A. The equipment specified in these contract documents is deemed to be the most appropriate for this project. Equipment has been selected because of optimum efficiency, durability, longevity and manufacturer/supplier field support.

B. The equipment selected for the basis of project design has been specified by manufacture's name or brand name. Other prior approved substitute equipment may be acceptable for use on this project, providing the pre-bid submittal requirements as specified herein, have been strictly adhered to. Substitute equipment must be approved prior to bid. Consideration of substitute after the bid will not be given.

C. For unnamed equipment to be deemed acceptable, the manufacturer must have ten (10) or more similar installations in Oklahoma operating continuously for more than five (5) years. Provide detailed list of installations with contact information in submittal.

1.3 SUBMITTAL REQUIREMENTS

A. Any manufacturer, supplier, contractor, or other party wishing to provide substitute equipment on this project must comply with the pre-bid submittal requirements as specified herein.

B. Pre-bid submittals for substitute equipment must be provided to the engineer for review at least fifteen (15) days prior to bid. Pre-bid submittals must be provided in triplicate and may remain the property of the review engineer. A reviewed copy of the pre-bid submittal may be returned to the submitting party, at the option of the engineer, and only if the proposed substitute equipment is deemed acceptable, in the professional opinion of the engineer. The utilization of approved substitute equipment on this project is conditional upon strict compliance with the engineer's review comments.

C. If, in the professional opinion of the engineer, a substitute item is deemed acceptable, that substitute item will be named in an addendum as approved for use in the project. Approval

of a pre-bid submittal in no way waives a manufacturer or supplier of the responsibility of providing full equipment submittals post bid, nor are any requirements of these specifications mitigated in any way.

D. Pre-bid submittals must be bound into a concise all-inclusive document. The document must contain a cover identifying the Project, Engineer, Owner, submitting party, submittal date, date of bid, and proposed substitute equipment. The pre-bid submittal will contain an index or table of contents. Attachments must be bound to or attached to the document.

E. Pre-bid submittal must include a precise outline of each and every specification call out / value contained in the original specification section. If values of any item do not meet/exceed, it will be the responsibility of the proposer to provide justification. Submittals not in full compliance will not be considered.

F. Local product representation is critically important. Along with the specific material information, pre-bid submittal should include an outline of how equipment will be serviced / maintained and who locally will provide this service.

G. Engineer will issue an addendum within five (5) days of bid date listing approved major equipment. Equipment not specifically named WILL NOT be acceptable for use.

1.4 MODIFICATIONS TO APPROVED ENGINEERING DESIGN

A. Should any modification to design, plans, specifications or any other project detail be required the Contractor shall reimburse the Owner for the cost of associated design work billed at a rate of $250/hour for engineering and drafting time required for inclusion of alternate equipment (excluding review time.)

B. Engineer will return an estimate of hourly engineering charges with approved submittals.

PART 2 PRODUCTS (NOT USED)

PART 3 EXECUTION

END OF SECTION

SECTION 01_36_00

PIPE LAYING PROVE-OUT

PART 1 GENERAL

1.1 SUMMARY

A. This specification outlines how the Owner will verify the viability of the Contractor's intended methods to achieve a reliable and repeatable pipe compaction in accordance with the project specifications throughout the pipeline alignment.
   1. Intent
      a. The intent of the Prove-out Demonstration is that the Contractor, the Owner, and design Engineer will agree on the standard field approach and level of care to be taken by the installation crews to promote compliance with the specifications, details, manufacturers' recommendations, and accepted industry standards throughout the project. Acceptable embedment density test results shall be based on this trench test performed by the Contractor at the beginning of pipe laying operations.

1.2 PRICE AND PAYMENT PROCEDURES

A. Measurement & Payment
   1. The trench test, including all labor, equipment, and testing, shall be incidental to the pipe laying operations and shall be included in the overall bid price for the installed pipe.

1.3 ADMINISTRATIVE REQUIREMENTS

A. Required Attendees
   1. The Contractor will schedule for the inspector, materials testing company representative, Owner's project manager, and Engineer to be onsite to review the findings of the pipe prove out. Failure for one of these individuals to participate may result in the need to reschedule the prove-out or to re-demonstrate the installation.

1.4 RELATED SECTIONS

A. Section 01_00_01 Basic Requirements

B. Section 01_33_01 General Submittal Requirements

1.5 QUALITY ASSURANCE

A. Sample Size
   1. The Prove-out should be demonstrated on a minimum of two joints of applicable pipe material and size specified for the project. It shall be placed in the project limits and observed during installation by the Inspector.

B. Trench Test Requirements
   1. The demonstration shall be performed prior to any open-cut pipe installation
   2. All submittals for pipe and backfill/embedment material shall be complete and approved based on 01 33 01 – General Submittal Requirements prior to the demonstration.
   3. The Contractor shall schedule the demonstration with the Owner at least 14 days in advance.
   4. This process will establish a relationship between the density achieved at the spring line and the density achieved at the haunch area by the Contractor's proposed placement and compaction method.
   5. The density at the spring line may have to be higher than the minimum specified density in order to achieve the minimum specified density in the haunch area.
   6. The density at the spring line required to achieve the minimum specified density in the haunch area shall be the target density at the spring line but shall be no less than the minimum specified density.
   7. Additional test sections shall be performed for all different embedment materials, or if the Contractor proposes to change methods of placement and compaction.
   8. The means, methods, and techniques of placement and compaction shall be the sole responsibility of the Contractor, and the trench test will be considered only as a means to verify that the Contractor's methods are capable of achieving the specified compaction throughout the embedment zone.
   9. The actual quality of the embedment and backfill, as compacted, shall be the responsibility of the Contractor and the satisfactory results from the trench test(s) and field density tests shall not be considered as a guarantee of the quality of the Contractor's embedment and backfill operations.
   10. Changes in the embedment material after completion of the Prove-out Demonstration shall require a new Prove-out Demonstration, unless specifically waived by the Owner. Such changes after the Prove-out Demonstration will require specific, written approval from the Owner.

C. Trench Test Procedure
   1. This process will establish a relationship between the density achieved at the spring line and the density achieved at the haunch area by the Contractor's proposed placement and compaction method. The Contractor shall demonstrate the pipe embedment placement and compaction approach in the following manner:
      a. Employ all safety procedures that apply to the permanent work.
      b. Utilize the same equipment and crews that will be used for the permanent work, to the extent practical.
      c. Excavate the trench to the width and minimum depth shown on the drawings.
      d. Prepare the trench subgrade and bedding to the requirements of the specification and trench details
      e. Install and embed one complete section of pipe, extending compacted fill up to the spring line of the pipe using the materials and density requirements specified. Lifting straps shall be left in place.
      f. Use bulkheads as needed to allow the specified compaction to extend to within two feet of each end of the pipe section.
      g. Testing lab shall perform density tests in the embedment material near the spring line of the pipe at two locations to be designated by the Owner.

h. Carefully remove the pipe from the trench, preserving the embedment to the extent possible.

i. Check deflection of within the pipe after the backfill is complete to ensure it is within manufacturer's acceptable range. (Pipe will sometimes float due to over compaction on the sides) Upon request of the OWNER the Contractor may be asked to recheck deflection on the prove-out pipe at 30 days to confirm original findings.

j. Testing lab shall perform a second set of in-place density tests on the compacted embedment to verify the Contractor's method has achieved the specified density and uniformity of embedment. Failure of the compacted embedment to hold the shape or achieve the specified density will be a failure of the pipe embedment demonstration.

2. In the event of a failure, the Contractor shall clean the trench to subgrade, adjust his methods and retest, all as needed, to demonstrate acceptable results.

PART 2 PRODUCTS (NOT USED)

PART 3 EXECUTION (NOT USED)

END OF SECTION

THIS PAGE INTENTIONALLY LEFT BLANK FOR DOUBLE SIDED PRINTING

SECTION 01_43_24

SYSTEM INTEGRATOR PREQUALIFICATION

PART 1 GENERAL

1.1 SCOPE OF WORK

A. The System Integrator (Integrator) shall be responsible for the PLC System, Control Panels, Field Instrumentation, SCADA, telemetry, and coordination with the Owner's existing facilities. Equipment supplied by other vendors will not be the responsibility of the Integrator with the exception of integrating the vendor supplied equipment into the system. It is the responsibility of the Integrator to verify what is required of vendor supplied equipment and specifics of I/O required for operations.

B. The Integrator shall work directly for the Contractor.

C. It is the intent of this project that Integrator shall provide a fully functional and working system to bring all components supplied by Integrator and outside vendors into system. This includes off-site equipment located at remote lift stations and the Southside site location.

D. Prequalified System Integrators that may be used on this project without additional submittal include:
   1. Haynes Equipment, LLC, Oklahoma City, OK

1.2 QUALIFICATION REQUIREMENTS

A. Systems Integrators wanting pre-approval shall submit documentation indicating they meet the requirements of this specification to the Engineer for review and approval a minimum of fifteen (15) days prior to bid.

B. The Integrator shall be engaged full time in the design and manufacturer of PLC based control systems. The Integrator shall have documented experience in the municipal water and wastewater market. Specifically, the Integrator shall have completed a minimum of ten (10) projects in Oklahoma in the past 5 years where they served as primary Integrator for a municipal water or wastewater project.

C. The Integrator shall maintain a local office within 150 driving miles of the project site for the past two years. This office shall be equipped with programming equipment, and staffed with a minimum 5 service technicians capable of performing routine maintenance, trouble shooting, and field programming changes on the proposed PLC control systems.

D. The control system Integrator shall have a panel shop located at their main facility and shall be able to obtain a UL listing for control panels.

E. All software development for this project shall be done in the local office.

F. The integrator shall have experience as the primary integrator of a project of similar magnitude on a municipal water or wastewater treatment plant in the past twelve (12) months.

1.3 QUALIFICATION

A. If, in the professional opinion of the engineer, a submitter meets the requirements of this section, the submitter will be named in an addendum as approved for use in the project.

B. Submittals must be bound into a concise all-inclusive document. The document must contain a cover identifying the Project, Engineer, Owner, submitting party, submittal date, and date of bid. The pre-bid submittal will contain an index or table of contents. Attachments must be bound to or attached to the document.

C. It is the responsibility of the submitter to fully satisfy the engineer as to qualifications they possess to accomplish a project of this magnitude.

PART 2 PRODUCTS (NOT USED)

PART 3 EXECUTION (NOT USED)

END OF SECTION

SECTION 01_45_29

TESTING LABORATORY SERVICES

PART 1 GENERAL

1.1 SCOPE OF WORK

A. This Section describes services to be provided by an independent testing laboratory approved by the Engineer, including the Contractor's responsibilities

B. The Contractor shall employ and pay for services of an independent testing laboratory to perform specified testing. Cost to be included in price bid for item(s) being tested or associated items of work.

C. The independent testing laboratory will perform tests and other services specified in individual specification Sections and as required by the Engineer and/or Owner.

D. Representatives from the independent testing laboratory shall collect all samples in the field.

E. The independent testing laboratory shall be acceptable to the Owner. The Owner reserves the right to reject testing laboratories that the Owner believes does not have sufficient qualifications.

F. When initial tests indicate non-compliance with the Contract Documents, all subsequent retesting occasioned by the non-compliance shall be performed by the same testing laboratory at the sole expense of the Contractor

G. The Contractor shall furnish concrete batch designs, properties of materials, and confirmation cylinders made from batch design at the Contractor's expense.

H. Employment of a testing laboratory by the Contractor in no way relieves the Contractor of his obligation to perform the work according to the Contract Documents.

1.2 SUBMITTALS

A. Prior to start of Work, submit testing laboratory name, address, and telephone number, and names of full-time registered Engineer, specialist and responsible officer.

1.3 REFERENCE STANDARDS

A. ASTM D3740 - Practice for Evaluation of Agencies Engaged in Testing and/or Inspection of Soil and Rock as Used in Engineering Design and Construction.

B. ASTM E329 - Recommended Practice for Inspection and Testing Agencies for Concrete, Steel, and Bituminous Materials as Used in Construction.

1.4 QUALITY ASSURANCE

A. Comply with "Recommended Requirements for Independent Laboratory Qualification," published by the American Council of Independent Laboratories.

B. Comply with basic requirements of ASTM E329, "Standards of Recommended Practice for Inspection and Testing Agencies for Concrete Steel, and Bituminous Materials as Used in Construction." ASTM D3740 - Practice for Evaluation of Agencies Engaged in Testing and/or Inspection of Soil and Rock as Used in Engineering Design and Construction.

C. Laboratory: Authorized to operate in the state of Oklahoma.

D. Laboratory Staff: Maintain a full-time registered Engineer on staff to review services.

E. Testing Equipment: Calibrated at reasonable intervals with devices of an accuracy traceable to either National Bureau of Standards (NBS) Standards or accepted values of natural physical constants.

1.5 LABORATORY RESPONSIBILITIES

A. Cooperate with Engineer and Contractor; provide qualified personnel at the site after due notice.

B. Test samples of mixes submitted by Contractor.

C. Perform specified inspections, sampling, and testing of materials in accordance with specified standards

D. Ascertain compliance of materials and mixes with requirements of Contract Documents.

E. Promptly notify Engineer and Contractor of observed irregularities or non-conformance of work or products.

F. Perform additional inspections and tests required by Engineer.

G. Attend conferences and progress meetings, when requested.

1.6 LABORATORY REPORTS

A. Promptly submit written report of each test and inspection; one copy each to Engineer, Owner, Contractor, and one copy to Record Document File. Each report shall include:
   1. Date Issued.
   2. Project Title and Number.
   3. Testing Laboratory Name, Address and Telephone Number.
   4. Name and Signature of Laboratory Inspector.
   5. Date and Time of Sampling or Inspection.
   6. Record of Temperature and Weather Conditions.
   7. Date of Test.
   8. Identification of Product and Specification Section.
   9. Location of Sample or Test in the Project.
   10. Type oflnspection or Test.

11. Results of tests and compliance with Contract Documents.

B. Laboratory is not authorized to:
1. Release, revoke, alter, or enlarge on requirements of Contract Documents.
2. Approve or accept any portion of the Work.
3. Perform any duties of the Contractor.
4. Stop the Work.

1.7 CONTRACTOR'S RESPONSIBILITIES

A. The Contractor shall assume full responsibility for coordination of the entire project, including verification that all structures, piping, coating systems and equipment components are compatible. The Contractor shall initially operate each equipment system, and shall make all necessary adjustments so that each system is placed in proper operating condition.

B. Cooperate with laboratory personnel, provide access to Work and to manufacturer's operations.

C. Secure and deliver to the laboratory adequate quantities of samples of materials proposed to be used and which require testing.

D. Provide to the laboratory the preliminary design mix proposed to be used for concrete, and other materials mixes which require control by the testing laboratory.

E. Furnish copies of products test reports as required.

F. Provide incidental labor and facilities to provide access to Work to be tested, to obtain and handle samples at the site or at source of Products to be tested, to facilitate tests and inspections, storage and curing of test samples.

G. Notify laboratory sufficiently in advance of operations to allow for laboratory assignment of personnel and scheduling of tests.

H. Notify Engineer 24 hours prior to expected time for operations requiring inspection and testing.

PART 2 PRODUCTS (NOT USED)

PART 3 EXECUTION (NOT USED)

END OF SECTION

THIS PAGE INTENTIONALLY LEFT BLANK FOR DOUBLE SIDED PRINTING

SECTION 01_56_17

DUST CONTROL

PART 1 GENERAL

1.1 SCOPE OF WORK

A. This item shall consist of the application of water on haul routes and/or construction sites for the purpose of maintaining these areas relatively free of dust.

B. This item shall not be measured for payment and will considered subsidiary to other items of work.

1.2 SUBMITTALS

A. Dust control plan to be submitted to the Engineer prior to construction

PART 2 PRODUCTS (NOT USED)

PART 3 EXECUTION

3.1 CONSTRUCTION

A. Dust control shall be achieved by the application of water sprinkled in amounts sufficient to control the dust to the satisfaction of the Engineer and the Owner.

B. The Contractor shall submit his plan for dust containment to the Engineer for approval prior to start of construction.

C. The contractor shall furnish and operate an approved sprinkler vehicle equipped with valves to regulate the flow of the liquid to the sprinkler bar so that the liquid will be evenly distributed, and at a controllable rate over the entire width sprinkled.

D. It shall be the Contractor's continuous responsibility at all times, including nights, holidays, and weekends until final acceptance of the project by the Owner to maintain the specified areas relatively free of dust in a manner which will cause the least inconvenience to the personnel at the plant site and owner.

END OF SECTION

THIS PAGE INTENTIONALLY LEFT BLANK FOR DOUBLE SIDED PRINTING

SECTION 01_75_23

TESTING, TRAINING & FACILITY STARTUP

PART 1 GENERAL

1.1 SUMMARY

A. This specification covers the work necessary to furnish Testing, Training & Startup as specified herein.

B. Performance Testing and Operation shall be the testing, balancing and operation of every piece of equipment furnished in this contract operating as an individual unit as well as a complete unit with the rest of the wastewater treatment plant. proper operation of all blowers, valves, lines, controls, lights, remote indications and all other items in this contract operating and functioning properly and as a whole.

C. Training shall be provided for ALL systems and equipment provided on the project or as otherwise defined and required in the Specifications.

D. Contractor shall prepare and submit a COMPLETE systems and equipment training list to the Engineer for approval prior to beginning work within this section. This training list shall, as a minimum, contain specification section, description, type of training, number of classes, instructions per class, etc.

E. Section includes:
1. Start-Up Plan.
2. Water Tightness Testing
3. Performance Testing.
4. General Start-Up and Testing Procedures.
5. Functional Testing.
6. Clean Water Testing.
7. Operational Testing.
8. Certificate of Proper Installation.
9. Services of manufacturer's representatives.
10. Training of Owner's personnel.
11. Final testing requirements for the complete facility.

F. Complete testing, training, and start-up will be performed within the Contract Times as outlined in the Contract Documents.
1. Allow realistic durations in the Progress Schedule for testing, training, and start-up activities.

G. Furnish labor, power, chemicals, tools, equipment, instruments, and services required for and incidental to completing functional testing, performance testing, and operational testing.

H. Provide competent, experienced technical representatives of equipment manufacturers for assembly, installation and testing guidance, and operator training.

1.2 RELATED SECTIONS

A. Section 01_00_01 Basic Requirements

B. Section 01_33_01 General Submittal Requirements

C. Section 01_91_01 Facility Commissioning

D. The Contract Documents are a complete unit and complementary to each other. The individual Specification sections and other Contract Documents do not contain all cross references to "related work" or "related sections." It is the Contractor's responsibility to review the complete Contract Documents in order to properly scope, schedule and coordinate the work of any/all subcontractors, suppliers, and others on this project. Anything called out in one location of the Contract Documents is binding as if it were called out in all sections of the Contract Documents.

1.3 SUBMITTALS

A. Submittals for products and miscellaneous items in this specification section shall be submitted in accordance with Section 01_33_01 General Submittal Requirements and related submittal sections and provisions of the Contract Documents.

B. Contractor shall prepare and submit a COMPLETE systems and equipment training list to the Engineer for approval prior to beginning work within this section. This training list shall, as a minimum, contain specification section, description, type of training, number of classes, instructions per class, etc.

C. Submit start-up plan for each piece of equipment and each system not less than 3 weeks prior to planned initial start-up of equipment or system.

D. Provide schedule with the following activities identified:
1. Manufacturer's services.
2. Installation certifications.
3. Operator training.
4. Submission of Operation and Maintenance Manual.
5. Functional testing.
6. Performance testing.
7. Operational testing.

E. Provide testing plan with test logs for each item of equipment and each system when specified. Include testing of alarms, control circuits, capacities, speeds, flows, pressures, vibrations, sound levels, and other parameters.

F. Provide summary of shutdown requirements for existing systems which are necessary to complete start-up of new equipment and systems.

G. Revise and update start-up plan based upon review comments, actual progress, or to accommodate changes in the sequence of activities.

1.4 WATER-TIGHTNESS TESTING

A. Prior to the application of damp-proofing or waterproofing materials on exterior concrete surfaces or backfilling, each structure listed below shall be tested for water-tightness. This article applies to the following:
   1. All manholes and utility structures as specified herein.
   2. SBR, AD, EQ basins, Lift stations, Fine screen & grit removal units, UV basin and all water & wastewater holding structures, chemical storage tanks, etc.

B. Each structure shall be filled to its maximum normal water surface elevation. For structures equipped with overflows, it shall be filled to the overflow weir elevation. The duration of the test shall be as follows:
   1. Manholes as specified.
   2. All other structures 48-hrs.

C. After filling, each structure shall be inspected by the Contractor and Engineer, Inspection shall include, but not be limited to walls, floors, footings, sumps, piping penetrations, and under-drains .
   1. The water level will be accurately measured over the test period to measure the drop in water level for comparison with allowable leakage.
   2. Evaporative losses and rainfall gains shall be measured and deducted/added to determine the net water leakage.
   3. The net water leakage for any 24-hour period shall not exceed the calculated value of 0.0005 times the structure nominal volume
   4. Damp spots on the exterior wall surface shall be deemed a failure
   5. Any measurable leakage at any wall/footing joint shall be deemed a failure.
   6. Damp spots/leakage is defined as locations where moisture can be picked up by dry hand

D. All leakage over the allowable value and all damp spots shall be repaired at Contractor's expense until retesting confirms that they are eliminated.

E. Damp-proofing and/or waterproofing materials may not be used until successful testing has been accomplished.

1.5 PERFORMANCE TESTING

A. Test equipment for proper performance at point of manufacture or assembly

B. Include ALL costs associated with witnessing performance tests in the bid price.

1.6 GENERAL START-UP AND TESTING PROCEDURES

A. Mechanical Systems: As specified in the individual equipment Specification sections as well as:
   1. Remove rust preventatives and oils applied to protect equipment during construction.
   2. Flush lubrication systems and dispose of flushing oils. Recharge lubrication system with lubricant recommended by manufacturer.
   3. Flush fuel system and provide fuel for testing and start-up.

4. Install and adjust packing, mechanical seals, O-rings, and other seals. Replace defective seals.
5. Remove temporary supports, bracing, or other foreign objects installed to prevent damage during shipment, storage, and erection.
6. Check rotating machinery for correct direction of rotation and for freedom of moving parts before connecting driver.
7. Perform cold alignment and hot alignment to manufacturer's tolerances.
8. Adjust V-belt tension and variable pitch sheaves.
9. Inspect hand and motorized valves for proper adjustment. Tighten packing glands to ensure no leakage, but permit valve stems to rotate without galling. Verify valve seats are positioned for proper flow direction.
10. Tighten leaking flanges or replace flange gasket. Inspect screwed joints for leakage.
11. Install gratings, safety chains, handrails, shaft guards, and sidewalks prior to operational testing.

B. Electrical Systems: As specified in Division 26 and the individual equipment specification sections:
1. Perform insulation resistance tests on wiring except 120-volt lighting, wiring, and control wiring inside electrical panels.
2. Perform continuity tests on grounding systems.
3. Test and set switchgear and circuit breaker relays for proper operation.
4. Perform direct current high potential tests on all cables that will operate at more than 2,000 volts. Obtain services of independent testing lab to perform tests.
5. Check motors for actual full load amperage draw. Compare to nameplate value.

C. Instrumentation Systems: As specified in Division 26 and the individual equipment specification sections:
1. Bench or field calibrate instruments and make required adjustments and control point settings.
2. Leak test pneumatic controls and instrument air piping.
3. Energize transmitting and control signal systems, verify proper operation, ranges and settings.

D. Contractor shall submit qualifications of start-up personnel for Engineer's approval at least six months before startup operations are anticipated. During the initial start-up phase, the Contractor and Manufacturer's field representative shall perform check starts and functional testing of individual pieces of equipment, sub systems, and systems to assure that they are ready for the operational performance test. The functional testing shall not be combined with the operational performance test.

1.7 FUNCTIONAL TESTING

A. Perform checkout and performance testing as specified in the individual equipment specification sections.

B. Functionally test mechanical and electrical equipment, and instrumentation and controls systems for proper operation after general start-up and testing tasks have been completed.

C. Demonstrate proper rotation, alignment, speed, flow, pressure, vibration, sound level, adjustments, and calibration. Perform initial checks in the presence of and with the assistance of the manufacturer's representative.

D. Demonstrate proper operation of each instrument loop function including alarms, local and remote controls, instrumentation and other equipment functions. Generate signals with test equipment to simulate operating conditions in each control mode.

E. Conduct continuous 8-hour test under full load conditions. Replace parts which operate improperly.

1.8 CLEAN WATER TESTING

A. Perform checkout and performance testing as specified in the individual equipment specification sections.

B. Fill all facilities with clean water or secondary effluent.
1. Contractor shall coordinate with Owner for availability of water source. Generally, this water shall be available at the plant's effluent. Contractor shall be responsible for transporting clean water from the plant's effluent to the facility to be tested.
2. Contractor shall be responsible for providing all temporary piping, hoses, pumps and temporary power to pump clean water to the facility to be tested.

C. Operate facilities successfully for 72 hours (3 days) continuously.

D. Contractor shall be responsible for providing, installing, and removing all temporary piping and valving required to perform Clean Water Testing for each facility.

E. Functionally test mechanical and electrical equipment, and instrumentation and controls systems for proper operation after general start-up and testing tasks have been completed.

F. Demonstrate proper rotation, alignment, speed, flow, pressure, vibration, sound level, adjustments, and calibration. Perform initial checks in the presence of and with the assistance of the manufacturer's representative.

G. Demonstrate proper operation of each instrument loop function including alarms, local and remote controls, instrumentation, and other equipment functions. Generate signals with test equipment to simulate operating conditions in each control mode.

H. Conduct continuous 24-hour test under full load conditions. Replace parts which operate improperly.

I. Following successful testing, Contractor shall coordinate removal of test water from tested facilities with Owner, develop a mutually acceptable schedule to bleed the test water in the existing plant stream. Contractor shall provide and operate all equipment and piping required to remove the test water from the tested facilities. Contractor shall not direct test water to the plant's process stream without the Owner's authorization. Contractor shall not direct test water to the plant's process stream in such a manner to provide an upset, an overloading or disruption to the plant's operations without the Owner's authorization.

1.9 OPERATIONAL TESTING

A. After completion of operator training and Clean Water Testing, conduct operational test of the entire facility. Demonstrate satisfactory operation of equipment and systems in actual operation.

B. Prior to beginning operational testing, Contractor shall import seed organisms from a similar wastewater plant, at the Contractor's expense, to start the SBR & AD biological systems prior to the operational phase. It typically takes 20 to 30 calendar days to reach required MLSS levels in the SBR aeration tanks. Wasting of sludge from the SBR to the AD will not occur until appropriate MLSS levels have been reached in the SBR process tanks.

C. Conduct operational test for continuous 14-day period.

D. Owner will provide operations personnel, power, fuel, and other consumables for duration of each specified test.

E. Immediately correct defects in material, workmanship, or equipment which became evident during operational test.

F. Repeat operational test when malfunctions or deficiencies cause shutdown or partial operation of the facility or results in performance that is less than specified.

1.10 CERTIFICATE OF PROPER INSTALLATION

A. At completion of Functional Testing, furnish written report prepared and signed by manufacturer's authorized representative, certifying equipment:
   1. Has been properly installed, adjusted, aligned, and lubricated.
   2. Is free of any stresses imposed by connecting piping or anchor bolts.
   3. Is suitable for satisfactory full-time operation under full load conditions.
   4. Operates within the allowable limits for vibration.
   5. Controls, protective devices, instrumentation, and control panels furnished as part of the equipment package are properly installed, calibrated, and functioning.
   6. Control logic for start-up, shutdown, sequencing, interlocks, and emergency shutdown have been tested and are properly functioning.

B. Furnish written report prepared and signed by the electrical and/or instrumentation subcontractor certifying:
   1. Motor control logic that resides in motor control centers, control panels, and circuit boards furnished by the electrical and/or instrumentation subcontractor has been calibrated and tested and is properly operating.
   2. Control logic for equipment start-up, shutdown, sequencing, interlocks and emergency shutdown has been tested and is properly operating.
   3. Co-sign the reports along with the manufacturer's representative and subcontractors.

1.11 TRAINING OF OWNER’S PERSONNEL

A. Provide operations and maintenance training for items of mechanical, electrical and instrumentation equipment. Utilize manufacturer's representatives to conduct training sessions.

B. Unless specifically noted otherwise, all training shall be conducted in accordance with the following general requirements.
   1. Schedule of Classes: Classes shall be scheduled in collaboration with the Treatment Plant Superintendent. Typically, Tuesday thru Thursday training hours are preferred.
   2. Number of classes on each subject:
      a. A minimum of two classes on identical subject matter shall be conducted within the same workday unless otherwise noted. Classes shall consist of a morning session and an afternoon session.
      b. The purpose of having two classes on each subject is to accommodate the attendance of as many Owner personnel working different shifts as possible.
      c. Coordinate training sessions to prevent overlapping sessions. Arrange sessions so that individual operators and maintenance technicians do not attend more than 2 sessions per week.
   3. Class Agenda
      a. A class agenda shall be prepared by the business conducting the training and submitted via the Contractor to the Engineer at least four weeks in advance of the date of the first corresponding class.
      b. This draft class agenda shall be submitted and shall conform to the Contractor prepared training list.
      c. The agenda shall include:
         1) A listing of subjects to be discussed.
         2) The training goals.
         3) The methods to be used to achieve that training goal(s).
         4) Time estimated for each subject.
         5) List of documentation to be used or provided to support training.
         6) A period for the instructor to question staff members to ensure that the training was successful.
         7) Instructor name.
      d. Agendas shall include an allocation of time for Owner staff to ask questions and discuss the subject matter .
      e. The Owner may request that particular subjects be emphasized and the agenda shall be adjusted to accommodate these requests. Copies of the agenda shall be distributed to each student at the beginning of each training class.
   4. Number of Students: It is estimated that 4 to 7 persons will attend each training class. The actual number of students will be determined by the Owner.

C. Length of Training:
   1. Each class shall be planned to be completed within 4 hours, including two 10-minute breaks.
   2. Requests for longer class periods must be approved by the Engineer.

D. Instructor Qualifications:
   1. Instructors shall be completely knowledgeable in the projects and systems for which they are providing training, and experienced in conducting classes.
   2. Sales representatives are not qualified instructors unless they possess the detailed operating and maintenance knowledge required for proper class instruction.

3. If, in the opinion of the Engineer, the scheduled training was not provided by an appropriately knowledgeable person, such training shall be rescheduled and repeated with a suitable instructor at the Contractor's expense.

E. Training Aids:
   1. Each instructor is encouraged to use audio-visual devices, models, charts, and so forth to increase the transfer of knowledge.
   2. The business conducting the training shall provide models, laptop computers, charts, and so forth for each class.
   3. It shall be the responsibility of the business conducting the training to confirm in advance that the classroom will be appropriate for the types of audio-visual equipment to be employed.
   4. Classroom Documentation:
      a. Provide final, approved Operation and Maintenance Manuals to Owner for specific pieces of equipment or systems two weeks prior to training session for that piece of equipment or system.
      b. If training is being completed on equipment, systems, or products which are required to provide an operations and maintenance manual, this operations and maintenance manual shall be complete and used during the classroom instruction.
      c. The quantity of operations and maintenance manuals required shall be provided and available for classroom use. Supplemental documentation handouts shall be provided to support instruction.

F. Training at the Actual Equipment ("hands on"):
   1. Shall be a part of each class.
   2. This portion of the instruction shall include operation, preventative maintenance points, calibration (wherever applicable), troubleshooting, common repairs, and manufacturer recommended servicing.

G. Coordinate training sessions to prevent overlapping sessions. Arrange sessions so that individual operators and maintenance technicians do not attend more than 2 sessions per week.

H. Provide Operation and Maintenance Manual for specific pieces of equipment or systems 1 month prior to training session for that piece of equipment or system.

I. Satisfactorily complete functional testing before beginning operator training.

J. Provide training sessions for each work shift. Pooling of shifts will not be permitted unless accepted by Owner.

K. Training Sessions: Provide training sessions for equipment as specified in the individual equipment specification sections.

L. The Contractor shall video all training sessions and provide a copy for the Owner.

M. The Contractor shall designate and provide one or more persons to be responsible for coordinating and expediting his/her training duties. The person or persons so designated shall be present at all training coordination meetings with the Owner.

N. The Contractor's coordinator shall coordinate the training periods with Owner personnel and manufacturer's representatives, and shall submit a training schedule for each piece of equipment or system for which training is to be provided. Such training schedule shall be submitted not less than 21 calendar days prior to the time that the associated training is to be provided and shall be based on the current plan of operation.

1.12 RECORD KEEPING

A. Maintain and submit following records generated during start-up and testing phase of Project:

B. Daily logs of equipment testing identifying all tests conducted and outcome.

C. Logs of time spent by manufacturer's representatives performing services on the job site.

D. Equipment lubrication records.

E. Electrical phase, voltage, and amperage measurements.

F. Insulation resistance measurements.

G. Data sheets of control loop testing including testing and calibration of instrumentation devices and setpoints.

PART 2 - PRODUCTS (NOT USED)

PART 3 – EXECUTION

3.1 GENERAL

A. Furnish Manufacturers' services when required by an individual specification section, to meet the requirements of this Section.

B. Where time is necessary in excess of that stated in the Specifications for Manufacturer's services, or when a minimum time is not specified, all the time required to perform the specified services shall be considered incidental to the price bid.

C. Schedule Manufacturer's services to avoid conflict with other onsite testing or other Manufacturer's onsite services.

D. Determine, before scheduling services, that all conditions necessary to allow successful testing have been met.

E. Only those days of service approved by Engineer will be credited to fulfill the specified minimum services.

F. Manufacturer's onsite services shall include:

1. Assistance during product (system, subsystem, or component) installation to include observation, guidance, instruction of Contractor's assembly, erection, installation or application procedures.
2. Inspection, checking, and adjustment as required for product (system, subsystem, or component) to function as warranted by Manufacturer and necessary to furnish Manufacturer's Certificate of Proper Installation.
3. Providing, on a daily basis, copies of all Manufacturer's representatives' field notes and data to Engineer.
4. Revisiting the Site as required to correct problems and until installation and operation are acceptable to Engineer.
5. Resolution of assembly or installation problems attributable to or associated with, respective Manufacturer's products and systems.
6. Assistance during functional and performance testing, and facility startup and evaluation.
7. Training of Owner's personnel in the operation and maintenance of respective product as required.
8. Additional requirements may be specified elsewhere.

G. Facility Startup Meetings: Schedule to discuss test schedule, test methods, materials, chemicals and liquids required, facilities operations interface, and Owner involvement.

H. Contractor's Testing and Startup Representative:
1. Designate and furnish one or more personnel to coordinate and expedite testing and facility startup.
2. Representative(s) shall be present during startup meetings and shall be available at all times during testing and startup.

I. Provide temporary valves, gauges, piping, test equipment and other materials and equipment required for testing and startup.

J. Provide Subcontractor and equipment Manufacturer's with adequate staff to prevent delays. Schedule ongoing work so as not to interfere with or delay testing and startup.

K. Owner will:
1. Provide water, power, chemicals, and other items as required for startup, unless otherwise indicated.
2. Operate process units and facility with support of Contractor.
3. Provide labor and materials as required for laboratory analyses.

3.2 MANUFACTURER'S CERTIFICATE OF PROPER INSTALLATION

A. Manufacturer's Certificate of Proper Installation form, a copy of which is attached to this Section, shall be completed and signed by the equipment Manufacturer's representative.

B. Such form shall certify that the signing party is a duly authorized representative of the Manufacturer, is empowered by the Manufacturer to inspect, approve, and operate their equipment and is authorized to make recommendations required to assure that the equipment is complete and operational.

3.3 TRAINING

A. General:
1. Furnish Manufacturer's representatives for detailed classroom and hands-on training to Owner's personnel on operation and maintenance of specified product (system, subsystem, component) and as may be required in applicable Specifications.
2. Furnish trained, articulate personnel to coordinate and expedite training, to be present during training coordination meetings with Owner, and familiar with operation and maintenance manual information.
3. Manufacturer's representative shall be familiar with facility operation and maintenance requirements as well as with specified equipment.
4. Furnish complete training materials, to include operation and maintenance data, to be retained by each trainee.

B. Training Schedule:
1. List specified equipment and systems that require training services and show:
   a. Respective Manufacturer.
   b. Estimated dates for installation completion.
   c. Estimated training dates.
2. Allow for multiple sessions when several shifts are involved.
3. Adjust schedule to ensure training of appropriate personnel as deemed necessary by Owner, and to allow full participation by Manufacturer's representatives. Adjust schedule for interruptions in operability of equipment.

C. Lesson Plan: When Manufacturer or vendor training of Owner personnel is specified, prepare for each required course, containing the following minimum information:
1. Title and objectives.
2. Recommended types of attendees (e.g., managers, engineers, operators, maintenance).
3. Course description and outline of course content.
4. Format (e.g., lecture, self-study, demonstration, hands-on).
5. Instruction materials and equipment requirements.
6. Resumes of instructors providing the training.

D. Pre-startup Training:
1. Coordinate training sessions with Owner's operating personnel and Manufacturer's representatives, and with submission of operation and maintenance manuals.
2. Complete at least 14 days prior to beginning of facility startup.

E. Post-startup Training: If required in Specifications furnish and coordinate training of Owner's operating personnel by respective Manufacturer's representatives.

F. Taping of Training Sessions:
1. Furnish audio and color video taping of all instruction sessions, including Manufacturer's representatives, hands-on equipment instruction and classroom sessions.
2. Video training shall be transferred to an Owner on an external hard drive with each file named in accordance with training session.
3. Format to be suitable for playback on standard equipment available commercially in the United States.

3.4 EQUIPMENT TESTING

A. Preparation:
   1. Complete installation before testing.
   2. Furnish qualified Manufacturer's representatives
   3. Obtain and submit from equipment Manufacturer's representative Manufacturer's Certificate of Proper Installation Form.
   4. Equipment Test Report Form: Provide written test report for each item of equipment to be tested, to include the minimum information:
      a. Owner/Project Name.
      b. Equipment or item tested.
      c. Date and time of test.
      d. Type of test performed (Functional or Performance).
      e. Test method.
      f. Test conditions.
      g. Test results.
      h. Signature spaces for Contractor and Engineer as witness.
   5. Cleaning and Checking: Prior to beginning functional testing:
      a. Calibrate testing equipment in accordance with Manufacturer's instructions.
      b. Inspect and clean equipment, devices, connected piping, and structures to ensure they are free of foreign material.
      c. Lubricate equipment in accordance with Manufacturer's instructions.
      d. Turn rotating equipment by hand when possible to confirm that equipment is not bound.
      e. Open and close valves by hand and operate other devices to check for binding, interference, or improper functioning.
      f. Check power supply to electric-powered equipment for correct voltage.
      g. Adjust clearances and torque.
      h. Test piping for leaks.
   6. Ready-to-test determination will be by Engineer-based at least on the following:
      a. Acceptable Operation and Maintenance Data.
      b. Notification by Contractor of equipment readiness for testing.
      c. Receipt of Manufacturer's Certificate of Proper Installation, if so specified.
      d. Adequate completion of work adjacent to, or interfacing with, equipment to be tested.
      e. Availability and acceptability of Manufacturer's representative, when specified, to assist in testing of respective equipment.
      f. Satisfactory fulfillment of other specified Manufacturer's responsibilities.
      g. Equipment and electrical tagging complete.
      h. Delivery of all spare parts and special tools.

B. Functional Testing:
   1. Conduct as specified in individual Specification sections.
   2. Notify Owner and Engineer in writing at least 10 days prior to scheduled date of testing.
   3. Prepare Equipment Test Report summarizing test method and results.
   4. When in Engineer's opinion, equipment meets functional requirements specified such equipment will be accepted for purposes of advancing to performance testing phase, if so required by individual Specification sections. Such acceptance will be evidenced by Engineer/Owner's signature as witness on Equipment Test Report.

C. Performance Testing:
   1. Conduct as specified in individual Specification sections.
   2. Notify Engineer and Owner in writing at least 10 days prior to scheduled date of test.
   3. Performance testing shall not commence until equipment has been accepted by Engineer as having satisfied functional test requirements specified.
   4. Type of fluid, gas, or solid for testing shall be as specified.
   5. Unless otherwise indicated, furnish labor, materials, and supplies for conducting the test and taking samples and performance measurements.
   6. Prepare Equipment Test Report summarizing test method and results.
   7. When, in Engineer's opinion, equipment meets performance requirements specified, such equipment will be accepted as to conforming to Contract requirements. Such acceptance will be evidenced by Engineer's signature on Equipment Test Report.

3.5 STARTUP OF UNIT PROCESSES

A. Prior to unit process startup, equipment within unit process shall be accepted by Engineer as having met functional and performance testing requirements specified.

B. Startup sequencing of unit processes shall be as chosen by Contractor to meet schedule requirements.

C. Make adjustments, repairs, and corrections necessary to complete unit process startup.

D. Startup shall be considered complete when, in opinion of Engineer, unit process as operated in manner intended for 5 continuous days without significant interruption. This period is in addition to functional or performance test periods specified elsewhere.
   1. Significant Interruption: May include any of the following events:
   2. Failure of Contractor to provide and maintain qualified onsite startup personnel as scheduled.
   3. Failure to meet specified functional operation for more than 2 consecutive hours.
   4. Failure of any critical equipment or unit process that is not satisfactorily corrected within 5 hours after failure.
   5. Failure of any non-critical equipment or unit process that is not satisfactorily corrected within 8 hours after failure.
   6. As determined by Engineer.

E. A significant interruption will require startup then in progress to be stopped. After corrections are made; start up test period and start from beginning again.

3.6 FACILITY PERFORMANCE DEMONSTRATION

A. When, in the opinion of Engineer, startup of all unit processes has been achieved, sequence each unit process to the point that facility is operational.

B. Demonstrate proper operation of required interfaces within and between individual unit processes.

C. After facility is operating, complete performance testing of equipment and systems not previously tested.

D. Document, as defined in Facility Startup and Performance Demonstration Plan, the performance of the facility.

E. Certify, on the Facility Performance Demonstration/Certification Form, that facility is capable of performing its intended function(s), including fully automatic operation.

END OF SECTION

MANUFACTURER'S CERTIFICATE OF PROPER INSTALLATION

Owner: City of Shawnee / Shawnee Mun Authority Equipment:_____

Project: Wastewater System Improvements Spec Section:_____

I hereby certify that the above referenced equipment/system has been (check applicable):

	Installed in accordance with Manufacturer's recommendations
	Inspected, checked, and adjusted
	Serviced with proper initial lubricants
	Electrical and mechanical connections meet quality and safety standards
	All applicable safety equipment has been properly installed
	Functionally tested in accordance with Manufacture's recommendations
	System has been performance tested, and meets or exceeds specified performance requirements as outlined by Manufacturer and in accordance with Manufacturer's recommendations

Provide and attach any certifications, reports, etc provided by the Manufacturer.

Relevant Comments:

_____

_____

_____

_____

_____

_____

As the dually authorized Manufacturer's representative I hereby certify that I am approved to inspect, approve and operate the Manufacturer's equipment and make recommendations required to assure that the equipment furnished by the manufacturer is complete and operational, except as may be otherwise indicated herein. Additionally, I further certify that all information contained herein is true and accurate.

Manufacturer: _____

By Manufacturer's Authorized Representative: _____
(Authorized Signature)

By Manufacturer's Authorized Representative: _____
(Authorized Signature / Date)

THIS PAGE INTENTIONALLY LEFT BLANK FOR DOUBLE SIDED PRINTING

SECTION 01_78_23

OPERATING & MAINTENANCE DATA

PART 1 GENERAL

1.1 RELATED WORK

A. Section 01_00_01 Basic Requirements

1.2 SCOPE OF WORK

A. Compile product data and related information appropriate for Owner's maintenance and operation of products furnished under the contract and provide four (4) original bound sets.

B. At completion of project, along with hard copies specified herein, submit to engineer six (6) complete copy of all final O&M manuals in PDF format compatible with Adobe Acrobat Reader on thumb drives.

C. Prepare operating and maintenance data as specified in this section, as referenced in other pertinent sections of specifications and in accordance with OAC 252:656-3-10.

D. Instruct Owner's personnel in the maintenance of products and in the operation of equipment and systems.

E. Provide operation and maintenance data for the following items.
1. All process, plumbing and electrical equipment.
2. Valves, cocks, gates and related accessories.
3. Instruments, control and SCADA devices and systems.
4. Flow Meters.
5. Pumps and pump drives.
6. All Facilities or Equipment specified in other specification sections or the plans

F. Submit Operations and Maintenance Data electronically to Engineer no later than 30 days prior to the scheduled equipment installation date.

1.3 QUALITY ASSURANCE

A. Preparation of data shall be done by personnel:
1. Trained and experienced in maintenance and operation of the described products.
2. Completely familiar with requirements of this Section.
3. Skilled as a technical writer to the extent required to communicate essential data.
4. Skilled as a draftsman competent to prepare required drawings.

1.4 FORM OF SUBMITTALS

A. Prepare data in the form of an instructional manual for use by owner's personnel.

B. Format:

1. Size: 8-1/2 in. x 11 in.
2. Paper: 20 pound minimum, white, for typed pages.
3. Test: Manufacturer's printed data, or neatly typewritten.
4. Drawings:
    a. Provide reinforced punched binder tab, bind in with text.
    b. Fold larger drawings to the size of the text pages.
5. Provide fly-leaf for each separate product, or each piece of operating equipment.
    a. Provide typed description of product, and major component parts of equipment.
    b. Provide indexed tabs.
6. Cover: Identify each volume with typed or printed title "OPERATING AND MAINTENANCE INSTRUCTIONS" and list:
    a. Title of Project.
    b. Identity of separate structure as applicable.
    c. Identity of general subject matter covered in the manual.

C. Binders:
1. Commercial quality three-ring binders with durable and cleanable plastic covers.
2. Maximum ring size: 1-1/2".
3. When multiple binders are used, correlate the data into related consistent groupings.

1.5 CONTENT OF MANUAL

A. Neatly typewritten table of contents of each volume, arranged in a systematic order.

B. Contractor, name of responsible principal, address and telephone number.

C. A list of each product required to be included, indexed to the content of the volume.

D. List, with each product, the name, address and telephone number of:
1. Subcontractor or installer.
2. Maintenance Contractor, as appropriate.
3. Identify the area of responsibility of each.
4. Local source of supply for parts and replacement.

E. Identify each product-by-product name and other identifying symbols as set forth in Contract Documents.

F. Product Data:
1. Include only those sheets which are pertinent to the specific product.
2. Annotate each sheet to:
    a. Clearly identify the specific product or part installed.
    b. Clearly identify the data applicable to the installation.
    c. Delete references to inapplicable information.

G. Drawings:
1. Supplement product data with drawings as necessary to clearly illustrate:
    a. Relations of component parts of equipment and systems.
    b. Control and flow diagrams.

2. Coordinate drawings with information in Project Record Documents to assure correct illustration of completed installation.
3. Do not use project Record Documents as maintenance drawings.

H. Written text, as required to supplement product data for the particular installation:
1. Organize in a consistent format under separate headings for different procedures.
2. Provide a logical sequence of instructions for each procedure.

I. Copy of each warranty, bond and service contract issued.
1. Provide information sheet for Owner's personnel, give:
a. Proper procedures in the event of failure.
b. Instances which might affect the validity of warranties or bonds.

J. All instructions, product data, and drawings must be marked to delete nonapplicable information.

1.6 MANUAL FOR EQUIPMENT AND SYSTEMS

A. Content, for each unit of equipment and system, as appropriate:
1. Tracing, photocopy or other suitable reproduction of the equipment nameplates.
2. Equipment performance curves, where applicable.
3. Installation and start-up instructions.
4. Description of unit and component parts.
a. Function, normal operating characteristics, and limiting conditions.
b. Performance curves, engineering data and tests.
c. Complete nomenclature and commercial number of all replaceable parts.
5. Operating Procedures:
a. Start-up, break-in, routine and normal operating instructions, regulation and control, shutdown, and emergency conditions.
b. Regulation, control, stopping, shut-down and emergency instructions.
c. Summer and winter operating instructions.
d. Special operating instructions.
6. Maintenance Procedures:
a. Routine operations.
b. Guide to common operating problems and "trouble-shooting"
c. Disassembly, repair and reassembly.
d. Alignment, adjusting and checking.
7. Servicing and lubrication schedule.
a. List of lubricants required.
8. Manufacturer's printed operating and maintenance instructions and/or water reuse system maintenance requirements.
9. Description of sequence of operation by control manufacturer.
10. Original manufacturer's parts list, illustrations, assembly drawings and diagrams required for maintenance.
a. Predicted life of parts subject to wear.
b. Items recommended to be stocked as spare parts.
c. Chemical inventory
11. As-installed control diagrams by controls manufacturer.
12. Each Contractor's coordination drawings.
a. As-installed color-coded piping diagrams.
13. Alternative and emergency operations.

14. Safety information
15. Other data as required under pertinent sections of specifications.
16. Name, address and telephone number of the Manufacturer.
17. Name, address and telephone number of sources of replacement parts and service nearest to the Project site.
18. Complete, detailed written preventive maintenance instructions for each system and subassembly.
19. Recommended spare parts lists and life expectancy of each part.
20. Written explanations of all safety considerations relating to operation or maintenance procedures.
21. Parts list showing parts and catalog numbers with exploded view showing interrelationship of parts.
22. Recommended schedule for execution of preventive maintenance tasks.
23. Lubrication and other consumables charts, including rate of consumption and alternate lubricants.
24. Troubleshooting instructions and diagnostic procedures.
25. List of required maintenance tools and equipment.
26. Warranty certificates.

B. Content, for each electric and electronic system, as appropriate:
   1. Description of system and component parts.
      a. Function, normal operating characteristics, and limiting conditions.
      b. Performance curves, engineering data and tests.
      c. Complete nomenclature and commercial number of replaceable parts.
   2. Circuit directories of panel boards.
      a. Electrical service.
      b. Controls.
      c. Communications.
   3. As-installed color-coded wiring diagrams.
   4. Operating Procedures:
      a. Routine operations.
      b. Guide to "trouble-shooting".
      c. Disassembly, repair and reassembly.
      d. Adjustment and checking.
   5. Manufacturer's printed operating and maintenance instructions.
   6. List of original manufacturer's spare parts, manufacturer's current prices, and recommended quantities to be maintained in storage.
   7. Other data as required under pertinent sections of specifications.

C. Prepare and include additional data when the need for such data becomes apparent during instruction of Owner's personnel.

D. Additional requirements for operation and maintenance data is given in the respective sections of specifications.

PART 2 PRODUCTS (NOT USED)

PART 3 EXECUTION (NOT USED)

END OF SECTION

THIS PAGE INTENTIONALLY LEFT BLANK FOR DOUBLE SIDED PRINTING

SECTION 01_78_34

WARRANTIES AND BONDS

PART 1 GENERAL

1.1 SUBMITTALS

A. Provide duplicate, notarized copies of warranties and bonds required by the Contract Documents. Assemble Contractor's documents and those of subcontractors, suppliers, and Manufacturers. Provide table of contents and assemble in binder with durable plastic cover.

B. The Contractor shall additionally submit a warranty document from each Manufacturer that is specific to the stipulations of the Contract Documents. The Contractor shall submit all warranties/bonds for the project in one submittal upon project acceptance. Items to be included are the bond, warranty period, list of contacts for replacement parts, and other pertinent information found to be of importance for the warranty/bond. All items are to be submitted in a PDF file and a 3-ring binder with tabs that differentiate the different warranty/bond sections.

1.2 WARRANTY INITIATION

A. Treatment Plant and Equipment warranty shall begin only upon final acceptance of the entire project as a whole by Owner. Usage of equipment during startup, testing and completion of punch list prior to final inspection shall be considered as demonstration period. Equipment manufacturer and Contractor shall include the cost for using equipment during start up and testing to not be considered as beneficial occupancy in the bid for warranty. This will apply regardless of what is submitted and/or approved in manufacturer's submittal data / warranty data.

1.3 WARRANTY PERIOD

A. For all improvements indemnify the Owner against any repairs which may become necessary to any part of the work performed and to items of equipment and systems procured for or furnished under this Contract, arising from defective workmanship or materials used therein, for a period of one (1) year after date established by the Owner as the warranty start date. Such warranty period shall be provided by the Contractor regardless of suppliers' standard warranty provisions.

1.4 REMEDY ACTIONS

A. In the event the Contractor fails to proceed to remedy the defects of which he has been notified within fifteen (15) days of the date of such notice, the Owner reserves the right to cause the required materials to be procured and the work to be done, as described in the Drawings and Specifications, and to hold the Contractor and the sureties on his bond liable for the cost and expense thereof.

B. If immediate repairs are necessary to continue operations of the facility, the Owner reserves the right to cause those repairs to be made and hold the Contractor liable for the expense of such repairs. In such a case, every reasonable effort will be made by the Owner

to notify the Contractor in advance but, failure of such notification shall not constitute a waiver of the Contractor's liability. In any case, the Contractor will be notified as soon as reasonably possible of the need for such repairs.

PART 2 PRODUCTS (NOT USED)

PART 3 EXECUTION

END OF SECTION

SECTION 01_91_01

FACILITY COMMISSIONING

PART 1 GENERAL

1.1 SUMMARY

A. This specification covers the work necessary to fully commission facility.

B. Demolition, permanent abandonment or cut/plug of lines to the existing facility shall not commence until Facility Commissioning is complete.

1.2 RELATED SECTIONS

A. Section 01_00_01 Basic Requirements

B. Section 01_33_01 General Submittal Requirements

C. Section 01_75_23 Testing, Training & Facility Startup

1.3 SUBMITTALS

A. Submittals for products and miscellaneous items in this specification section shall be submitted in accordance with Section 01_33_01 General Submittal Requirements and related submittal sections and provisions of the Contract Documents.

1.4 REQUIREMENTS

A. Commissioning Process will commence after successful completion of 14-day operational test and issuance of Substantial Completion to Contractor.

B. Commissioning Process will be 30 days in duration.

C. During the course of the Commissioning Process, the Engineer and Owner will evaluate any issues and recommend design modifications which shall be implemented by the Contractor through the Change Order process.

1.5 RESPONSIBILITIES

A. General
   1. Responsibilities listed do not relieve the Contractor from all other responsibilities and duties associated with project closeout as defined in the Contract Documents.

B. Contractor
   1. All preventive and unscheduled maintenance of all equipment and facilities in the plant. This shall include, but not be limited to the following:
      a. Providing all lubricants.
      b. Lubrication of all equipment in accordance with manufacturer's recommendations.

c. Perform all manufacturer recommended preventive maintenance.
d. Exercise all equipment not in use during Commissioning phase.
e. Repair all failed equipment.
f. Periodic check of all equipment alignment, vibration, and noise levels in accordance with Specifications.
g. Provide all parts required for equipment repair.
h. Provide all tools and miscellaneous equipment required for equipment repair.
i. Administration/logging/documentation of all preventive maintenance and repair work.
j. Cleanup associated with equipment failure and repair.
k. Daily cleanup of buildings.
l. Landscaping maintenance.
m. Roadway cleanup and maintenance.
n. Replacement of all HVAC filters.

2. Warranty related issues/items.
3. Owner's personnel training required after successful completion of the 7-day testing.
4. Assist in transition to Automatic/SCADA operational mode.
5. Other contractual requirements including, but not limited to, incomplete work list.

C. Owner

1. Provide all chemicals required for plant operations, including scheduling and securing of chemical deliveries to the plant and respective storage tanks.
2. Perform all laboratory analysis required for plant operations.
3. Review training schedules and plans, and schedule personnel training.
4. Assisting Engineer in the evaluation of issues and recommendations of modifications to be implemented by the Contractor through the change order process.
5. Provide staff for Commissioning.
6. Operation of facilities.

PART 2 PRODUCTS

2.1 SECTION

PART 3 EXECUTION

3.1 SECTION

END OF SECTION

SECTION 02_21_20

SUBSURFACE UTILITY ENGINEERING

PART 1 GENERAL

1.1 SUMMARY

A. Section Includes: Requirements for subsurface utility engineering (SUE) in Critical Locate Areas.

B. Critical Locate Areas include the following stationing where SUE Quality Level A SUE is required:
   1. STA. 76+00 to STA. 107+00.
   2. STA. 183+00 to STA. 190+00
   3. STA 217+00 to STA. 232+00
   4. STA. 242+00 to STA 272+00
   5. STA. 310+00 to STA 328+00

C. The Drawings also denote additional Critical Locate Areas for SUE Quality Level A services. These are at any/all locations where the proposed main crosses existing utilities crossings outside of other Critical Locate Areas specified above.

1.2 SUBMITTALS

A. Submittals for products and miscellaneous items in this specification section shall be submitted in accordance with Section 01_33_01 General Submittal Requirements and related submittal sections if included.

B. Shop drawings:
   1. Contractor shall submit all SUE information as follows:
      a. Plan drawings that clearly illustrate vertical and horizontal location of utilities based on SUE.
         1) Horizontal location shall include northing and easting coordinates and measurements from relevant facilities (fence, edge of pavement, etc.)
      b. Identifies size and material and service for known utilities.
      c. Identify size and material for unknown utilities encountered.
   2. Review of shop drawings and calculations by Engineer and Owner are for record purposes only.
   3. Drawings shall be performed, stamped, and endorsed by a Civil Engineer registered in the state the project is located.
   4. Field survey information shall be performed, stamped, and endorsed by a Surveyor registered in the state the project is located.

C. Detailed sequence of SUE:
   1. Submit a schedule for all SUE events that shows start, end, and intermediate milestones.

1.3 REFERENCES

A. The Contractor shall follow the standards listed below, except as otherwise specified herein. The latest revision or edition in effect at the time of bid opening shall be utilized.

B. American Society of Civil Engineers (ASCE):
   1. 38-02 Standard Guideline for the Collection and Depiction of Existing and Subsurface Utility Data. Quality Level A.

1.4 DESCRIPTION/DESIGN REQUIREMENTS

A. Existing utilities indicated on the Drawings are approximate only and are provided based on the best information available.

B. Existing utilities are shown for the convenience of Contractor only.
   1. It is the Contractor's responsibility to field verify the vertical and horizontal location of all utilities including those not indicated or incorrectly indicated on the Drawings.

C. Contractor is responsible to review all geotechnical reports, record drawings, and Contract Documents.

D. Coordinate with utility locator, such as CALL OKIE BEFORE YOU DIG, and other affected entities.

E. Contractor is responsible for protecting all utilities encountered.

F. If a conflict exists between what is indicated on the Drawings and what exists in the field, Contractor shall notify Engineer immediately.

G. Provide subsurface utility engineering services by a Civil Engineer registered in the state the project is located in accordance with ASCE 38-02.
   1. Quality Level A to be achieved through the use of hydrovac excavation, minimum, as well as other mean recommended by SUE engineer.

1.5 QUALIFICATIONS

A. General: Contractor shall utilize the services of a qualified subconsultant for SUE services with minimum qualifications that include but are not limited to:
   1. Minimum of 5 years of SUE experience in the state the project is located in where providing vertical and horizontal locations of utilities in accordance with ASCE 38-02 utility quality level A was required.
   2. Completion of 5 SUE projects of equal or greater magnitude within the past 5 years.

1.6 SEQUENCING

A. Do not begin Work until submittals have been accepted by Engineer and until equipment and materials necessary for installation are on site.

B. Submit submittals a minimum of 30 days prior to the scheduled date to begin excavation work.

PART 2 PRODUCTS (NOT USED)

PART 3 EXECUTION

3.1 CRITICAL LOCATE AREA

A. At Critical Locate Areas, perform hydro vacuum excavation to field verify horizontal and vertical locations of such lines within 4 feet horizontally of proposed work.
   1. Verify location of existing utilities minimum of 30 working days in advance of pipe laying activities. Use extreme caution and care when uncovering utilities designated by Critical Locate.
   2. Notify Engineer immediately upon identification of any obstructions.

B. Notify involved utility companies of date and time that investigation excavation will occur and request that their respective utility lines be marked in field. Comply with utility or pipeline company requirements that their representative be present during excavation. Provide Engineer with 48 hours notice prior to field excavation or related work.

C. Survey vertical and horizontal locations of obstructions relative to project baseline and datum and provide to Engineer. Submittal shall be signed and sealed by Professional Land Survey licensed in the state the project is located for determination of vertical and horizontal locations. Provide a digital copy of survey drawings to Engineer in AutoCAD format.

D. Complete all Critical Locate Area SUE services prior to preparing submittals for all underground water lines, gas lines, storm sewers, sanitary sewers, telecommunication lines, electric lines or power ducts, pipelines, and concrete structures. Submit SUE documentation to Engineer as noted in this specification and identify any conflicts or discrepancies from Drawings to the Engineer.

3.2 SUE SCHEDULE

A. Provide SUE services for pipelines and utilities crossing as indicated herein on the drawings identified as Critical Utility Locate Area.

END OF SECTION

THIS PAGE INTENTIONALLY LEFT BLANK FOR DOUBLE SIDED PRINTING

SECTION 02_30_00

SUBSURFACE INVESTIGATION

PART 1 GENERAL

1.1 EXISTING CONDITIONS

A. General:
1. Soil and subsurface investigations were conducted at the site by an independent testing laboratory and a report prepared which contained logs of borings made.
2. This report was obtained for the Engineer's design use only.
3. A copy of report is included in the project documents for informational purposes.

B. Interpretations:
1. Soil investigation data is available only for information and convenience of bidders, and is not warranted to indicate actual conditions.
2. The Owner and Engineer do not assume responsibility for variations in kind, depth, quantity and conditions of soils; they disclaim any responsibility for accuracy, true location, and extent of soils investigation that has been prepared by others; and they further disclaim responsibility for interpretation of that data by bidders as in projecting soil bearing values, rock profiles, soil stability, and presence, level, and extent of underground water.
3. Soil investigation data is not a part of the Contract Documents, and should be considered for reference only and not be used for bidding purposes.

PART 2 PRODUCTS (NOT USED)

PART 3 EXECUTION

3.1 BIDDER INVESTIGATION

A. Bidder shall visit the site and acquaint himself with site conditions.

B. Bidder shall, at his expense and prior to bidding, make all soil surveys and investigations he considers necessary.

C. Obtain authorization of Owner, through Engineer, prior to the start of additional boring or subsurface investigations.

END OF SECTION

THIS PAGE INTENTIONALLY LEFT BLANK FOR DOUBLE SIDED PRINTING

SECTION 02_41_00

DEMOLITION

PART 1 GENERAL

1.1 SCOPE OF WORK

A. The work of this section consists of the removal and disposal of existing structures as outlined on the plans and specified herein including salvaging of materials and backfilling of resulting trenches, holes, and pits.

B. Demolition may include the complete or partial removal as indicated or specified. Contractor has rights to salvage unless noted in the Drawings. Equipment and material not specifically stated as being retained by the Owner shall be disposed of offsite in accordance with local and State laws.

1.2 RELATED SECTIONS

A. Section 01_00_01 Basic Requirements

B. Section 01_33_01 General Submittal Requirements

C. Section 33_01_33 Wastewater Liquid & Solids Removal & Disposal

D. The Contract Documents are a complete unit and complementary to each other. The individual Specification sections and other Contract Documents do not contain all cross references to "related work" or "related sections." It is the Contractor's responsibility to review the complete Contract Documents in order to properly scope, schedule and coordinate the work of any/all subcontractors, suppliers, and others on this project. Anything called out in one location of the Contract Documents is binding as if it were called out in all sections of the Contract Documents.

1.3 REQUIREMENTS

A. Take necessary photographs of the existing facilities/construction to verify existing condition prior to demolition work.

B. Owner assumes no responsibility for actual condition of equipment and portions of structures to be demolished. Conditions existing at time of inspection for bidding purposes will be maintained by Owner insofar as practicable.

C. Use of explosives will not be permitted.

D. Conduct demolition operations and removal of debris to ensure minimum interference with roads, streets, walks, and other adjacent occupied or used facilities. Do not close or obstruct streets, walks or other occupied or used facilities without permission from Owner. Provide alternate routes around closed or obstructed traffic ways if required by Owner.

E. If support system/shoring plan is required it shall be designed by the Contractor's Professional Engineer licensed in the state where the Project is located. Contractor's Engineer shall submit the sealed plans of the support system. Contractor shall keep a copy of the support system plans on site at all-times.

F. Do not interrupt existing utilities serving occupied or operating facilities, except when authorized in writing by the Owner. Provide temporary services during interruptions to existing utilities, as acceptable to Owner.

G. Salvage items designated for Owner's salvage shall be stored as a unit. Salvage items shall be cleaned, list and tag prior to storage. Protect the items from damage and deliver to Owner's designated location. Salvage each item with auxiliary or associated equipment required for operation.

H. Assume possession of demolished materials, unless specified otherwise. Remove demolished materials from site at least weekly.

I. Prevent airborne dust. Use water or dust palliative when necessary. Provide and maintain hoses and connections to water main or hydrant.

J. Do not burn materials on site.

K. Immediately upon discovery, remove and dispose of contaminated, vermin-infested, or dangerous materials by safe means so as not to endanger health of workers and public.

L. Remove trees and shrubs within marked areas; clear undergrowth and dead plant material.

M. Backfill open pits and holes caused by demolition.

N. Rough grade areas affected by demolition and grade to drain.

O. Remove demolished materials, tools, and equipment upon completion of demolition.

P. Repair damage caused by demolition.

Q. Topsoil all disturbed areas, grade to drain, hydromulch and water until established.

PART 2 PRODUCTS (NOT USED)

PART 3 EXECUTION

3.1 PERFORMANCE

A. Remove process water and sludge from unit in accordance with Section 33_01_33.

B. Demolish as outlined in Drawings and remove from site. Use such methods as required to complete work within limitations of governing regulations.

C. Proceed with demolition in a systematic manner, from top to ground.

D. Take care in the removal of equipment and materials to be salvaged to prevent damage to such.

E. When demolishing buildings and basins, the Contractor shall remove all concrete, piping and equipment. Removal of structures shall include removal of all equipment and concrete within 6-ft of the ground surface as well as the filling and compacting with soil of any openings to natural grade.
   1. Contractor is responsible for final dewatering of the basins.
      a. Grit, rags, biosolids and other residuals remaining in the basins being demolished shall be removed prior to demolition. These materials shall be disposed in accordance with applicable regulations.
      b. Wastewater from the basins may be returned to the head of the plant through the Flow Equalization Basins. The Contractor shall closely coordinate basin dewatering activities with the Operators to ensure the dewatering the basins will not adversely impact operations of the treatment plant.

F. Remove existing exposed piping and electrical wiring and conduits to be abandoned from structural surface, cut flush, plug or cap, and finish to match existing surfaces.

G. Remove buried piping, wiring, and conduits to be abandoned a minimum of 3’ outside of new structure lines, excavation-lines, or as indicated on Drawings.
   1. Plug the remainder flush.
   2. Mark the plugged or capped piping, wiring, and conduits with a marker which extends from the plug or cap to 2” above surrounding ground conditions.
   3. Place a 3’ lath with flagging by the marker which extends 2’ above the surrounding ground.
   4. Following completion and approval of project record documents, remove lath to elevation of surrounding ground.

H. Pavement Removal
   1. Remove to existing joints or sawed to limits indicated on Drawings.
   2. Saw cut depth shall be sufficient to avoid disturbing remaining existing pavement. No saw cut depth shall be less than 1-1/2”.

I. Contractor shall be responsible for lead abatement. Contractor shall notify Owner immediately upon encountering asbestos during demolition work. Owner will be responsible for asbestos abatement.

END OF SECTION

THIS PAGE INTENTIONALLY LEFT BLANK FOR DOUBLE SIDED PRINTING

SECTION 03_11_00

CONCRETE FORMWORK

PART 1 GENERAL

1.1 SUMMARY

A. Formwork Requirements for cast-in-place concrete.

1.2 RELATED SECTIONS

A. Section 01_00_01 Basic Requirements

B. Section 01_33_01 General Submittal Requirements

C. Section 03_20_00 Concrete Reinforcement

D. Section 03_30_00 Cast-in-Place Concrete

E. The Contract Documents are a complete unit and complementary to each other. The individual Specification sections and other Contract Documents do not contain all cross references to "related work" or "related sections." It is the Contractor's responsibility to review the complete Contract Documents in order to properly scope, schedule and coordinate the work of any/all subcontractors, suppliers, and others on this project. Anything called out in one location of the Contract Documents is binding as if it were called out in all sections of the Contract Documents.

1.3 SUBMITTALS

A. Submittals for products and miscellaneous items in this specification section shall be submitted in accordance with Section 01_33_01 General Submittal Requirements and related submittal sections and provisions of the Contract Documents.

B. Shop Drawings:
   1. Show reinforcement fabrication, bar placement location, splices, spacing and bar designation, bar type, length, size, bending, number of bars, bar support type, and other pertinent information, including dimensions. Information must correspond directly to data listed on the bill of materials.
   2. Provide sufficient detail to permit placement of reinforcement without use of design drawings. Reproduction of design drawings for use as shop drawings is not permitted. Do not begin fabrication of reinforcing steel until after shop drawings have been reviewed by the Owner's Representative.
   3. Detail shop drawings in accordance with ACI 315.
   4. Rebar submittal shall include following information.
      a. Grade of bars.
      b. Table of bending dimensions, bar size, bar length, number of bars and spacing.

c. The reinforcing shall be listed separately for each structural element (wall, slab, footing, beam, etc.). Each element shall be labeled on the bar list and clearly identified on the shop drawings.
d. Each bar shall be identified such as corner bars, tie bars, vertical bars, etc.

1.4 REFERENCES

A. The Contractor and/or Manufacturer shall follow the standards listed below, except as otherwise specified herein. The latest revision or edition in effect at the time of bid opening shall be utilized.

B. American Concrete Institute (ACI):
1. ACI 117: Specifications for Tolerances for Concrete Construction and Materials.
2. ACI 301: Specifications for Structural Concrete.
3. ACI 315: Details and Detailing of Concrete Reinforcement.
4. ACI 318: Building Code Requirements for Structural Concrete.
5. ACI 347: Guide to Formwork for Concrete.
6. ACI 347.2R: Guide for Shoring/Reshoring of Concrete Multistory Buildings.
7. ACI 350: Code Requirements for Environmental Engineering Concrete Structures.

1.5 STORAGE & HANDLING

A. Store materials above ground on framework or blocking. Cover wood for forms and other accessory materials with protective waterproof covering, providing for adequate ventilation. Store materials in accordance with all manufacturer's recommendations.

B. Form lumber shall be delivered to the job site as far in advance of its use as is practical, and shall be carefully stacked clear of the ground in such a manner as to facilitate air-drying.

C. Handle materials to prevent damage in accordance with the manufacturer's recommendations.

1.6 QUALITY ASSURANCE

A. Design Criteria for Formwork, Falsework and Shoring
1. The design and engineering of all concrete formwork, including all shoring, bracing and reshoring, shall be the responsibility of the Contractor and shall be performed by an Professional Engineer licensed in the state where the project is located.
2. Design for loads, lateral pressure, and allowable stresses as described in ACI 347. Design for all lateral loads and other applicable requirements of controlling local building codes.
3. Camber formwork to compensate for anticipated deflection during placement of concrete when required to maintain specified tolerances.
4. Design formwork to be readily removed without impact, shock, or damage to concrete surfaces and adjacent materials.
5. Design for fresh concrete as the pressure exerted by a liquid weighing 150 pounds per cubic foot. Additionally, the rate of concrete placement, concrete temperature and all other pertinent factors shall be taken into account.
6. Design for all construction loads imposed during construction.

7. Forms shall have adequate stiffness to maintain mortar-tightness and true final dimensions of member being constructed within specified construction tolerances.
8. Falsework and shoring shall be designed to provide required strength and stiffness to insure safety and that no excessive settlement or deformation occurs.
9. Falsework and shoring shall be supported on an adequate foundation to provide required strength and stiffness to support the superimposed load without settlement.

B. Alignment Control & Allowable Tolerances
1. Construct and erect formwork in accordance with ACI 117, ACI 301 and ACI 347.
2. True alignment of walls and other vertical surfaces having straight lines shall be controlled and checked. Forming shall be arranged with provisions for adjusting the horizontal alignment after the form has be filled with concrete. Establish a transit line or other reference so that adjustments can be made to an established line while the concrete is still plastic.

PART 2 PRODUCTS

2.1 MATERIALS

A. Lumber & Plywood
1. Properly seasoned and of good quality; free from loose or unsound knots, holes, shakes, splits, decay and other imperfections that would affect its strength or adversely affect the finished concrete surface.

B. Form Linings
1. Fiberboard: Hardwood finished smooth on one side with minimum thickness of 3/16 inch.
2. Plywood: Conforming to APA HDO; exterior exposure waterproof adhesive with minimum thickness of 3/8 inch.

C. Form Release Agent:
1. A ready to use water based material formulated to eliminate or reduce surface imperfections free of kerosene, mineral oils, waxes or resins.
2. Release agent shall not discolor or injuriously affect the finished concrete surface, subsequent coatings or concrete curing.

D. Coating for Plastic Forms

E. Alkali-resistant gel-coat. Chamfer Strips: Wood, metal, PVC or rubber strips ¾ by ¾ inch minimum.

2.2 FABRICATIONS

A. Forms
1. General
a. Chamfers: Provide a chamfer on all exposed edges by using either wooden or plastic chamfer strips. Chamfer strips shall be a forty-five degree right triangle in section with the two shorter sides measuring 3/4-inch.

b. Waterproofed Surfaces: At surfaces to be waterproofed, provide formwork with sufficient anchor pattern to facilitate bond of the membrane waterproofing.

2. Smooth Forms:
   a. Construct formwork with plywood; tempered, concrete-form hardboard; dressed lumber faced with plywood or fiberboard lining; metal; plastic; or metal-framed plywood-faced panel material acceptable to the Engineer to provide continuous, straight smooth surfaces. Form material will be free of raised grain, torn surfaces, worn edges, patches, dents or other defects. Furnish material in largest practical sizes to minimize the number of joints and, when shown on the drawings, conform to the joint system shown. Form material will have sufficient strength and thickness to withstand the pressure of newly placed concrete without bow or deflection.
   b. Smooth forms will be used on all concrete surfaces exposed to view or liquid in the completed structure.
3. Rough Forms:
   a. Construct forms of dressed or undressed lumber free of knots, splits, or other defects; plywood; metal; or other material acceptable to the Engineer. Material shall have sufficient strength and thickness to withstand the pressure of newly placed concrete without bow or deflection.
   b. Rough forms may be used on concrete surfaces that will not be exposed to view or liquid in the completed structure.

B. Void/Carton Forms.
1. Use new carton forms of corrugated cardboard. Forms shall be impregnated throughout with paraffin and laminated with water resistant adhesive. Do not use trapezoidal carton forms.
2. Forms of the height indicated on the drawings shall be designed to support the wet concrete plus normal construction loads.
3. Soil retainers shall be composed of materials that are not adversely affected by moisture and as directed in the Drawings.
4. Carton forms provided around the perimeter of drilled shafts shall be installed using pre- manufactured sealed void forms with curved edges.
5. Install carton forms according to the manufacturer's recommendation and maintain in a dry condition prior to concrete placement. Carton forms that have not been maintained in a dry condition shall be replaced before concrete is placed.
6. Acceptable Manufacturers:
   a. VoidForm Products
   b. Savway Carton Forms
   c. Voidco Fiberboard Void Forms

C. Metal Forms
1. All specified requirements for "Forms" regarding design, mortar tightness, geometry, bevels, chamfers, bracing, alignment, removal, re-use, oiling, etc. shall apply equally to metal forms.
2. Metal used for forms shall have adequate thickness to remain true to shape. Clamps, pins and other connecting devices shall be designed to hold the forms rigidly together and allow form removal without injury to the concrete.
3. Bolt and rivet heads on exposed surfaces shall be countersunk.
4. Metal forms that do not present a smooth surface free from rust, grease or other foreign materials that discolor concrete shall not be used.

D. Slip Forming
1. Slip forming is not permitted.

2.3 FORM ACCESSORIES

A. Form Ties
1. Form ties shall be of the removable end, permanently embedded body type and shall have sufficient strength and rigidity to support and maintain the form in proper position and alignment without the use of auxiliary spreaders.
2. Ties of a type intended to be entirely removed shall be coated with an acceptable lubricant to safeguard against damaging the concrete during such removal. The use of wire ties will not be permitted.
3. Use removable cones of one-inch by one-inch minimum size on the end of the form tie.
4. Grout depressions left in concrete by the cones with non-shrink grout after the ends of the cones have been removed.

B. Form Sealer
1. Surface sealer that will not bond with, stain, or adversely affect concrete surfaces, and will not impair subsequent treatments of concrete surfaces when applied to most forms or form liners. A ready-to-use water based material formulated to reduce or eliminate surface imperfections, containing no mineral oil or organic solvents. Environmentally safe, meeting local, state, and federal regulations.

PART 3 EXECUTION

3.1 FORM CONSTRUCTION

A. General
1. Design and installation of formwork shall comply with ACI 301.
2. All formwork, scaffolds and work platforms shall be safe and conform to OSHA Requirements.
3. Construct and maintain formwork, complying with ACI 347 and this Section so that it will maintain correct sizes of members, shape, alignment, elevation and position during concrete placement and until concrete has gained sufficient strength. Provide for openings, offsets, sinkages, keyways, recesses, moldings, anchorages and inserts, as required.
4. Construct forms for easy removal without damage to concrete surfaces.
5. Formwork shall be sufficiently tight to prevent leakage of cement paste during concrete placement. Solidly butt joints and provide backup material at joints as required to prevent leakage and fins.
6. Chamfer strips shall be placed in forms to bevel all edges and corners permanently exposed to view, except the top edges of walls and slabs which are shown to be tooled. Edges of formed joints and interior corners shall not be beveled unless shown or specified otherwise. Equipment bases shall have formed beveled edges for all vertical and horizontal corners. Unless otherwise noted, bevels shall be 3/4-inch wide.
7. Form ties shall be employed in such places and at such intervals as to securely hold the forms in position during the placing of concrete, and to withstand the weight and pressure of the wet concrete.

8. Provide temporary openings at the base of column and wall forms and at other points as required to facilitate observation and cleaning immediately before concrete is placed. Temporary opening shall be 2' x 2' in size or as required by Owner's Representative.
9. If runways are required for moving equipment, provide for support of runways with struts or legs resting directly on the formwork or structural member. Do not allow runways or supports to rest on reinforcing steel.
10. Provide openings below large pipe (over 10" diameter) or large embedments to allow adequate concrete fill and minimize honeycombs and voids.
11. Construct forms with such care as to produce concrete surfaces which will not have unsightly or objectionable form marks in exposed concrete surfaces. Forms shall have all contact surfaces thoroughly cleaned before reuse.

B. Forms for Surfaces Exposed to View or Liquids:
1. Drill forms to suit ties used and to prevent leakage of concrete mortar around tie holes. Form ties shall be uniformly spaced and aligned in rows.
2. Provide sharp, clean corners at intersecting planes, without visible edges or offsets. Back joints with extra studs or girts to maintain true, square intersections.
3. Form molding shapes, recesses and projections with smooth-finish materials and install in forms with sealed joints to prevent displacement.
4. Form exposed corners of beams and columns to produce square, smooth, solid, unbroken lines. Provide all exterior exposed corners with 3/4-inch chamfer.
5. Arrange facing material in an orderly and symmetrical fashion. Keep the number of seams to a practical minimum. Support facing material adequately to prevent deflection in excess of allowable tolerances.
6. For flush surfaces exposed to view in the completed structure, overlap previously placed hardened concrete with form sheathing by approximately 1-inch. Hold forms against hardened concrete to maintain true surfaces, preventing offsets or loss of mortar.

C. Edge Forms and Screed Strips for Slabs: Set edge forms or bulkheads and intermediate screed strips for slabs to obtain required elevations and contours in the finish slab surface. Provide and secure units to support types of screeds required.

D. Surface to Receive Membrane Waterproofing: Provide chamfers for external corners in concrete surfaces that will be covered with membrane waterproofing. Provide a continuous reglet at line of top of membrane waterproofing on vertical surfaces. Coordinate location with waterproofing applicators.

3.2 TOLERANCES

A. Construct formwork so that concrete surfaces will conform to tolerance limits as listed in ACI 117, ACI 301 and ACI 347.

B. Establish sufficient control points and bench marks as references for tolerance checks. Maintain these references in undisturbed condition until final completion and acceptance of the project.

3.3 ADJUSTMENTS OF FORMWORK

A. Use wedges or jacks to provide positive adjustment of shores and struts. Wedges used for final adjustment of forms should be fastened in position after final inspection and before concrete placement.

B. Securely brace forms against lateral deflections. Prepare to compensate for settling during concrete placement.

C. For wall openings, construct wood forms that facilitate any necessary loosening to counteract swelling of forms.

3.4 PREPARATION OF FORM SURFACES

A. Before placing concrete, clean surfaces of forms and embedded materials. Remove accumulated mortar, grout, rust and other foreign matter.

B. Coat forms for exposed or painted concrete surfaces with form oil or form-release agent before placing reinforcement. Cover form surfaces with coating material used in strict accordance with the Manufacturer's printed instructions. Do not allow excess coating material to accumulate in forms or to contact hardened concrete against which fresh concrete will be placed. Remove coating material from reinforcement before placing concrete.

C. Other than retained-in-place metal forms, forms for unexposed surfaces may be wet with water immediately before concrete placement in lieu of coating. One exception is that when a possibility of freezing temperatures exists, use of a coating is mandatory.

3.5 REMOVAL OF FORMS

A. Forms shall not be removed until the concrete has adequately hardened and set. Clamps or tie rods may be loosened twenty-four (24) hours after the concrete is placed; ties, except for a sufficient number to hold the forms in place, may be removed at that time.

B. Forms on vertical surfaces, when repair of surface defects or finishing is required before concrete is aged, may be removed as soon as concrete has hardened sufficiently to resist damage from removal operations.

C. Remove top forms on sloping surfaces of concrete as soon as concrete has attained sufficient stiffness to prevent sagging. Loosen wood forms for wall openings as soon as this can be accomplished without damage to concrete. Formwork for columns, walls, sides of beams, and other parts not supporting weight of concrete may be removed provided that concrete has hardened sufficiently to resist damage from removal operations and provided the removal of these forms will not disturb members supporting the weight of the concrete.

D. All forms and shoring used to support weight of concrete or any construction loads shall remain in place until concrete has reached the minimum strength specified for removal of forms and shoring as specified in item 3.06 of this Section. In no case shall forms be removed in less than 4 days.

E. If removal of formwork occurs before required curing is complete, exposed concrete surfaces shall be cured immediately after the removal of formwork until all curing requirements are met. See Section 03 30 00 for curing requirements.

3.6 REMOVAL STRENGTH

A. Specified Removal Strength
1. The minimum concrete compressive strengths for removal of all formwork supporting the weight of concrete shall be 100 percent of the specified minimum 28 day strength of the class of concrete involved.

B. Control Tests: Suitable strength control tests will be used as evidence that concrete has attained the removal strength required for removal of formwork or shoring supporting the weight of concrete in structural members or construction loads.
1. Field-Cured Test Cylinders. When field-cured test cylinders reach the specified removal strength, formwork or shoring may be removed from the respective concrete placements. Strength data from field-cured test cylinders shall be furnished by the Contractor.
2. Laboratory-Cured Test Cylinders. When concrete has been cured as specified for cast-in- place concrete for the same time period required by laboratory-cured cylinders to reach
3. the specified removal strength, the formwork or shoring may be removed from respective concrete placements. Determine the length of time that the concrete placement has been cured by totaling the number of days or fraction of days, not necessarily consecutive, during which the air temperature surrounding the concrete is above 70 degrees F and the concrete has been damp or thoroughly sealed against evaporation and loss of moisture.

3.7 SHORING AND RESHORING

A. When reshoring is permitted or required, plan operations in advance and secure approval of such operations from the Engineer. All shoring and reshoring shall be designed by a Professional Engineer retained by the Contractor who is licensed in the State in which the project is constructed.

B. Shoring and Reshoring shall comply with ACI 301, ACI 347 and ACI 347.2R.

C. While reshoring is under way, keep live load and construction loads off the new construction. Do not permit concrete beams, slab, column or other structural member to be subjected to combined dead and construction loads in excess of loads permitted for developed concrete strength at the time of reshoring.

D. Place reshores as soon as practicable after stripping operations are complete but in no case later than the end of the working day on which stripping occurs. Tighten reshores to carry the required loads without overstressing construction. Leave reshores in place until tests representative of concrete being supported have reached specified strength.

E. Floors supporting shores under newly placed concrete shall have their original supporting shores left in place or shall be reshored. The reshores shall be located directly under a shore position above unless other locations are permitted. Extend reshoring over a sufficient number of stories to distribute weight of newly placed concrete, forms and

construction live loads in such a manner that design superimposed loads of floors supporting shores are not exceeded.

3.8 FORM REUSE

A. Do not reuse forms that are worn or damaged beyond repair. Thoroughly clean and recoat forms before reuse. For wood and plywood forms to be used for exposed smooth finish, sand or otherwise dress concrete contact surface to original condition or provide form liner facing material. For metal forms, straighten, remove dents and clean to return to original condition.

END OF SECTION

THIS PAGE INTENTIONALLY LEFT BLANK FOR DOUBLE SIDED PRINTING

SECTION 03_15_20

CONCRETE JOINTS & EMBEDDED ITEMS

PART 1 GENERAL

1.1 SUMMARY

A. Requirements for all concrete joints and embedded items for cast-in-place concrete

1.2 RELATED SECTIONS

A. Section 01_00_01 Basic Requirements

B. Section 01_33_01 General Submittal Requirements

C. Division 3 - Concrete

1.3 SUBMITTALS

A. Submittals for products and miscellaneous items in this specification section shall be submitted in accordance with Section 01_33_01 General Submittal Requirements and related submittal sections if included.

B. Submit shop drawings showing all concrete joints, proposed sequences for concrete placement and type of concrete specified. Concrete may not be placed without a joint layout and pour sequence reviewed by the Engineer

1.4 REFERENCES

A. The Contractor and/or Manufacturer shall follow the standards listed below, except as otherwise specified herein. The latest revision or edition in effect at the time of bid opening shall be utilized.

B. American Society for Testing and Materials (ASTM):
1. ASTM A53 - Standard Specification for Pipe, Steel, Black and Hot-Dipped, Zinc-Coated, Welded and Seamless.
2. ASTM C510 - Standard Test Method for Staining and Color Change of Single- or Multicomponent Joint Sealants.
3. ASTM C603 - Standard Test Method for Extrusion Rate and Application Life of Elastomeric Sealants.
4. ASTM C639 - Standard Test Method for Rheological (Flow) Properties of Elastomeric Sealants.
5. ASTM C661 - Standard Test Method for Indentation Hardness of Elastomeric-Type Sealants by Means of a Durometer.
6. ASTM C679 - Standard Test Method for Tack-Free Time of Elastomeric Sealants.
7. ASTM C719 - Standard Test Method for Adhesion and Cohesion of Elastomeric Joint Sealants Under Cyclic Movement (Hockman Cycle).
8. ASTM C792 - Standard Test Method for Effects of Heat Aging on Weight Loss, Cracking, and Chalking of Elastomeric Sealants.

9. ASTM C793 - Standard Test Method for Effects of Laboratory Accelerated Weathering on Elastomeric Joint Sealants.
10. ASTM C794 - Standard Test Method for Adhesion-in-Peel of Elastomeric Joint Sealants.
11. ASTM C881 - Standard Specifications for Epoxy-Resin-Base Bonding Systems for Concrete.
12. ASTM C920 – Standard Specification for Elastomeric Joint Sealants.
13. ASTM C1059 - Standard Specification for Latex Agents for Bonding Fresh to Hardened Concrete.
14. ASTM C1247 - Standard Test Method for Durability of Sealants Exposed to Continuous Immersion in Liquids.
15. ASTM D412 - Standard Test Methods for Vulcanized Rubber and Thermoplastic Elastomers – Tension.
16. ASTM D471 - Standard Test Method for Rubber Property—Effect of Liquids.
17. ASTM D624 - Standard Test Method for Tear Strength of Conventional Vulcanized Rubber and Thermoplastic Elastomers.
18. ASTM D638 - Standard Test Method for Tensile Properties of Plastics.
19. ASTM D994 - Standard Specification for Preformed Expansion Joint Filler for Concrete (Bituminous Type).
20. ASTM D1751 - Standard Specification for Preformed Expansion Joint Fillers for Concrete Paving and Structural Construction (Nonextruding and Resilient Bituminous Types).
21. ASTM D1752 - Standard Specification for Preformed Sponge Rubber and Cork Expansion Joint Fillers for Concrete Paving and Structural Construction.
22. ASTM D2240 - Standard Test Method for Rubber Property - Durometer Hardness.
23. ASTM D2628 - Standard Specification for Preformed Polychloroprene Elastomeric Joint Seals for Concrete Pavements.
24. ASTM D6690 - Standard Specification for Joint and Crack Sealants, Hot Applied, for Concrete and Asphalt Pavements

C. American Concrete Institute (ACI)
1. ACI 301 - Specifications for Structural Concrete.
2. ACI 503.2 - Standard Specification for Bonding Plastic Concrete to Hardened Concrete with a Multi-Component Epoxy Adhesive.

D. U.S. Army Corps of Engineers (CRD)
1. CRD-C572 - Corps of Engineers Specifications for Polyvinyl Chloride Waterstops.

1.5 QUALITY ASSURANCE

A. Mock-ups:
1. Welding demonstration:
a. Demonstrate ability to weld acceptable joints in polyvinyl chloride waterstops before installing waterstop in forms.

B. Field joints:
1. Polyvinyl chloride waterstops field joints: Shall be free of misalignment, bubbles, inadequate bond, porosity, cracks, offsets, and other defects which would reduce the potential resistance of the material to water pressure at any point. Replace defective joints. Faulty material will be removed from the site and disposed of by the Contractor at its own expense.

C. Inspections:
1. Quality of welded joints will be subject to acceptance of the Engineer.
2. Polyvinyl chloride waterstop: The following defects represent a partial list that will be grounds for rejection:
a. Offsets at joints greater than 1/16 inch or 15 percent of the material thickness, at any point, whichever is less.
b. Exterior crack at joint due to incomplete bond, which is deeper than 1/16 inch or 15 percent of the material thickness, at any point, whichever is less.
c. Any combination of offset or crack that will result in a net reduction in the cross section of the waterstop in excess of 1/16 inch or 15 percent of the material thickness, at any point, whichever is less.
d. Misalignment of the joint that will result in misalignment of the waterstop in excess of 1/2 inch in 10 feet.
e. Porosity in the welded joint as evidenced by visual inspection.
f. Bubbles or inadequate bonding.

PART 2 PRODUCTS

2.1 CONCRETE EXPANSION JOINTS, GENERAL

A. Expansion Joint Sealant
1. Single or multi-component cold-applied polyurethane elastomeric joint sealant conforming to ASTM C920. Sealant must be appropriate for the specific application. Provide joint primer according to Manufacturer's recommendation.
2. Material Properties
a. Movement capability (ASTM C719): 25% min.
b. Tensile strength (ASTM D412): 160 psi min.
c. Ultimate elongation (ASTM D412): 280% min.
d. Tear strength (ASTM D624): 50 lb./in., min.
e. Adhesion in peel (concrete): 10 lb./in., min.
f. Ultimate hardness (ASTM C661, Shore): 20 to 45.
g. Color: gray.
3. Water Immersion & Chemical Resistance
a. If joint will be immersed in water or exposed to wastewater, or chemicals, sealant must exhibit good resistance to water immersion and good chemical resistance

B. Expansion Joint Filler
1. Resilient non-bituminous material conforming to ASTM D1752. Material must be compatible with the joint sealant.

C. Joint Accessories
1. Backer Rod
a. Extruded closed-cell polyethylene foam rod compatible with the joint sealant. Rod shall be 25% larger than the joint opening.
2. Bond Breaker Tape
a. Polyethylene or TFE-fluorocarbon self adhesive tape, compatible with the joint sealant.

2.2 CONCRETE EXPANSION JOINTS (EXTERIOR ROADWAY & PAVEMENTS ONLY)

A. Expansion Joint Sealant
   1. Hot-poured elastic joint sealant conforming to ASTM D6690. Sealant must be appropriate for concrete pavement. Provide joint primer according to Manufacturer's recommendation.

B. Expansion Joint Filler
   1. Preformed bituminous type conforming to ASTM D994. Material must be compatible with the joint sealant.

2.3 CONCRETE BONDING AGENT

A. Concrete Exposed to Water and/or Chemicals
   1. ASTM C881, Type IV. Grade and Class shall be as required for the project application. A field service representative of the Manufacturer shall be available during initial application to instruct the Contractor in the proper use of the product when so requested by the Engineer or the Owner.

B. Concrete Not Exposed to Water or Chemicals
   1. Acrylic bonding agent conforming to ASTM C1059.

2.4 BOND BREAKER

A. 30-pound asphalt saturated felt or polyethylene membrane.

2.5 EXPANSION JOINT DOWELS

A. Smooth steel bars shall conform to the requirements of Section 03_20_00. Cut dowels to length at shop or mill before delivery to the site. Dowels must be straight and clean, free of loose flaky rust and loose scale.

2.6 EXPANSION JOINT DOWEL SLEEVES

A. Metal or plastic dowel sleeve. Sleeve shall be sized to allow dowel to move complete width of joint without binding.

2.7 WATERSTOPS

A. General
   1. All waterstop materials shall be compatible with potable water applications per AWWA and any other industry standards.
   2. Unless otherwise called for in the Drawings or specified herein, provide PVC waterstops where waterstops are indicated in the Drawings.
   3. Manufacturers: One of the following or equal:
      a. Vinylex Corporation.
      b. Greenstreak Plastic Products Company, Inc.
   4. Dumbbell-type waterstop will not be allowed unless otherwise specified or indicated on the Drawings.
   5. No scrap or reclaimed material shall be used.

B. Polyvinyl Chloride Waterstops (PVC)
   1. Material Requirements
      a. Waterstops shall be extruded from virgin polyvinyl chloride compound and shall conform to the requirements of the Corps of Engineers Specification CRD-C572. Waterstops shall be uniform in dimension, homogenous and free from porosity. No reclaimed or scrap material may be used.
      b. Tensile strength: 1400 psi minimum.
      c. Ultimate Elongation: 280 percent minimum.
   2. Construction Joints
      a. Ribbed type without center bulb.
      b. 6 inch minimum width.
      c. 3/8 inch minimum thickness.
   3. Expansion Joints
      a. Dumbbell type with a minimum 3/4-inch inside diameter center bulb.
      b. 9 inch minimum width.
      c. 3/8 inch minimum thickness.

C. Thermoplastic Elastomeric Rubber (TPE-R)
   1. Where joints will be exposed to harsh chemical environments and where indicated in the Drawings, provide TPE-R waterstops in lieu of PVC waterstops.
   2. Material Requirements
      a. Waterstops shall be a fully vulcanized blend of EPDM and polypropylene (thermoplastic vulcanizate). Waterstops shall be uniform in dimension, homogenous and free from porosity. No reclaimed or scrap material may be used.
      b. Tensile strength: 2000 psi minimum.
      c. Ultimate Elongation: 450 percent minimum.
   3. Construction Joints
      a. Ribbed type without center bulb.
      b. 6 inch minimum width.
      c. 3/8 inch minimum thickness.
   4. Expansion Joints
      a. Dumbbell type with a minimum 3/4-inch inside diameter center bulb.
      b. 9 inch minimum width.
      c. 3/8 inch minimum thickness.

D. Hydrophilic Waterstops
   1. Hydrophilic waterstop materials shall be bentonite-free and expand by a minimum of 80% of dry volume in the presence of water to form a water-tight joint without damaging the concrete in which it is cast.
   2. The material shall absorb water and cause an increase in volume in a completely reversible and repeatable process. The material shall be dimensionally stable after repeated wet-dry cycles with no deterioration in swelling potential.
   3. Minimum cross-sectional dimensions are 3/16 inch by 3/4 inch.
   4. Provide only where specifically indicated in the Project Documents.

E. Hydrophilic Sealants
   1. Hydrophilic sealant shall be compatible with hydrophilic waterstop and shall firmly adhere to concrete, metal and PVC in a dry or damp condition. When cured, it shall be elastic indefinitely.

F. Hydrophilic Injection Resin

1. Hydrophilic injection resin shall be acrylate-ester based with a viscosity of less than 50 cps. The resin shall be water soluble in its uncured state, solvent free and non-water reactive. In its cured state it shall form a solid hydrophilic flexible material resistant to permanent water pressure and compatible with bitumen, joint sealants and concrete.

2.8 EPOXY ANCHORS

A. Provide stainless steel adhesive anchors and hardware complying with ASTM F593, AISI Type 316 headed with stainless steel nuts and washers.

B. Adhesive system shall Hilti HIT-HY200 adhesive, by Hilti. No substitutions will be considered.

C. Embedment depth of the anchor shall provide pullout strength equal to the allowable tensile capacity of the anchor, unless otherwise noted in the Drawings. Reduction in pullout strength due to spacing and edge distances shall be made.

2.9 MISCELLANEOUS EMBEDDED METAL ITEMS

A. Miscellaneous embedded metal items shall conform to the requirements Section 05051 or the section of the specifications to which they apply. In the case of conflicting requirements, the most restrictive requirements shall apply.

B. Use "Form Saver" or "Threaded Coupler" to avoid drilling holes in the forms.

C. Paint aluminum contact surfaces with a zinc rich primer where aluminum items are embedded in concrete.

PART 3 EXECUTION

3.1 CONSTRUCTION JOINTS

A. General

1. Make construction joints only at locations shown and required on the Contract Drawings, the reviewed shop drawings or as directed or approved by the Engineer. Any additional construction joints or relocation of construction joints shown on the drawings that are proposed by the Contractor must be submitted to the Engineer for review.
2. Allow a minimum of three (3) days to elapse before placing concrete adjacent to a slab or wall previously placed.
3. All joints shall be perpendicular to main reinforcement; continue all reinforcing across the joint.
4. Provide waterstops in all wall and slab construction joints as specified or in all water bearing structures, all below grade joints and at locations shown on the Drawings.

B. Additional Construction Joints

1. In addition to construction joints explicitly shown in the Drawings, provide and locate additional construction joints as follows:
2. Walls.
   a. Locate vertical construction joints at a maximum spacing of 40 feet.
3. Foundation slabs and slabs-on-grade
   a. Locate construction joints at a spacing of 50 feet maximum. Place concrete in a strip pattern, unless otherwise indicated in the Contract Drawings, to a maximum of 2500 square feet in any one placement.
4. Structural slabs and beams

C. Locate construction joints at a maximum spacing of 50 feet. Locate construction joints in compliance with ACI 301, unless otherwise indicated in the drawings, to a maximum of 2500 square feet in any one placement.

D. Construction Joint Preparation
1. The joint surface of the previously cast member or existing concrete in all cases shall be cleaned free of all oil, grease, curing compound, dirt, or laitance, and shall be wetted. Cleaning shall be accomplished by high pressure water jet, wet sand blasting, dry sand blasting, or scrubbing, singly or in combination, as required and shall remove loosened particles of aggregate, damaged concrete at surface, and other substances which may prevent complete adhesion. Remove accumulated concrete on projecting reinforcing steel.
2. Construction joints shall be roughened mechanically to a full amplitude of ¼ inch. Thoroughly clean joint surfaces as described in this Section. Coat joints with neat cement slurry with the consistency of a heavy paste and scrub into surfaces by means of a stiff bristled brush. Place new concrete before cement paste dries. As an alternative to using a neat cement slurry, a bonding agent may be utilized.

3.2 EXPANSION JOINTS

A. Do not extend reinforcement or other embedded metal items that are continuously bonded to concrete through any expansion joints.

B. Position dowels accurately if called for in the Drawings. Support dowels against displacement during concrete placement and vibration. Install dowel sleeve grout-tight to prevent bonding of the dowel during concrete placement.

C. Position expansion joint filler material accurately. Support against displacement during concrete placement and vibration. Place filler the full depth of the member less an allowance to form a groove for sealant as detailed.

3.3 CONTROL JOINTS

A. Control joints shall be provided in non-water bearing slabs-on-grade only as called for in the Drawings and specified herein

B. Make top grooves for control joints in slabs on grade as detailed and seal as specified. Grooves may be made with joint forming strip, via tooling or may be sawed.

C. If control joints are sawed, properly time cutting with concrete set. Start cutting as soon as concrete has hardened sufficiently to prevent aggregates from being dislodged by the

saw. Complete cutting before shrinkage stresses have developed sufficiently to induce cracking and within twelve (12) hours of concrete placement. The Contractor shall have at least one spare saw available during the sawing operation.

D. Control joints shall be cleaned and filled with expansion joint sealant. Inject sealant through a nozzle into the bottom of the joint, filling the entire joint space without air voids.

3.4 WATERSTOPS

A. General
1. Provide waterstops in all horizontal and vertical joints in foundation slabs and peripheral walls of all structures up to a minimum of 12 inches above final ground level and all walls and slabs of liquid-containing structures or compartments to a minimum of 12 inches above maximum liquid level unless specifically shown otherwise on the Drawings.
2. Provide PVC waterstops unless TPE-R waterstops are called for in the Drawings.
3. Carry waterstops in walls into lower slabs and join to waterstops in slabs with appropriate types of fittings.
4. In waterbearing structures: Provide all joints with waterstops, whether indicated on the Drawings or not.
5. Provide waterstops that are continuous.
6. Set waterstops accurately to position and line as indicated on the Drawings.
7. Hold and securely fix edges in position at intervals of not more than 24 inches so that they do not move during placing of concrete.
8. Position the waterstop so that symmetrical halves of the waterstop are equally divided between the concrete pours. The center axis of the waterstop shall be coincident with the centerline of the joint.
9. Do not drive nails, screws, or other fasteners through waterstops in vicinity of construction joints.
10. Use wires at not more than 24 inches on centers near outer edge of the waterstop to tie waterstops into position.
11. Special clips may be used in lieu of wires, at Contractor's option.
12. Terminate waterstops 3 inches from top of finish surfaces of walls and slabs unless otherwise specified or indicated on the Drawings.
13. When any waterstop is installed in the concrete on one side of a joint, while the other half or portion of the waterstop remains exposed to the atmosphere for more than 2 days, suitable precautions shall be taken to shade and protect the exposed waterstop from direct rays of sunlight during the entire exposure and until the exposed portion is embedded in concrete.
14. When placing concrete at waterstops in slabs, lift the edge of the waterstop while placing concrete below the waterstop. Manually force the waterstop against and into the concrete. Then cover the waterstop with fresh concrete.

B. PVC and TPE-R Waterstops
1. Each piece of pre-molded waterstop must be of maximum practicable length for a minimal number of end joints.
2. All waterstops shall be continuous, and so jointed as to form a complete barrier to the passage of water through any construction, control/contraction or expansion joint.
3. Joints in waterstops shall be made by heat sealing or other method approved by the Manufacturer in accordance with the requirements of the Manufacturer. The

joints in strips of waterstop shall be such that the entire cross section of the joint shall be dense, homogeneous and free of all porosity. All finished joints shall have a tensile strength of not less than 75% of the material of the strip as extruded.

4. Weld joints such as unions, crosses, ells, and tees, with thermostatically controlled equipment recommended by waterstop manufacturer:
   a. The material shall not be damaged by heat sealing.
   b. Make joints by overlapping, then simultaneously cut the ends of the sections to be spliced so they will form a smooth even joint. Heat the cut ends with the splicing tool until the plastic melts. Press the 2 ends together until the plastic cools.
   c. The continuity of the waterstop ribs and tubular center axis shall be maintained.
   d. The splices shall have a tensile strength of not less than 60 percent of the unspliced materials tensile strength.
5. Where waterstop is continuous in orthogonal directions, provide factory-made, pre- formed tee or cross waterstop pieces. Waterstop joints in the field shall only be butt-type joints.
6. All waterstops shall be installed so that half its width will be embedded on each side of the joint. Tie the waterstop to the reinforcement at a maximum spacing of 18 inches to ensure that the waterstop will be held securely in true position and in straight alignment in the joint during placement and vibration of concrete.
7. Care shall be exercised to ensure that the PVC waterstop is completely embedded in concrete and without voids.

C. Hydrophillic Waterstops
1. Install hydrophilic waterstops as called for in the Drawings in accordance with the Manufacturer’s requirements. Install hydrophilic sealant in accordance with all Manufacturer’s requirements.
2. The hydrophilic waterstop shall be installed in a bed of hydrophilic sealant compatible with the hydrophilic waterstop before skinning and curing begins so that any irregularities in the concrete surface are completely filled and the waterstop is bonded to the sealant. After the sealant has cured, secure the waterstop to the concrete in accordance with the Manufacturer’s instructions.
3. Prior to installation of the hydrophilic sealant, clean the concrete surface to removed laitance and any other materials that will adversely affect bonding of the sealant to the concrete.

3.5 SEALING JOINTS

A. Clean, prime and apply sealants in accordance with Manufacturer's recommendations.

B. Sealant shall be applied when the ambient temperature is between 40° F and 90° F, unless recommended otherwise by the sealant Manufacturer.

C. During application, exercise care to prevent sealant from spilling onto surfaces adjacent to joints.

3.6 DOWELS

A. Where indicated on Drawings, install dowels at right angles to construction joints and expansion joints. Align dowels accurately with finished surface. Rigidly hold in place and support during concrete placement.

3.7 SETTING ANCHORS

A. Anchor embedded reinforcing, bolts and other items as shown on the Drawings into existing concrete with an epoxy in accordance with these Specifications and all Manufacturer's recommendations.

3.8 SETTING ANCHOR BOLTS

A. Set anchor bolts for structural steel specified

B. Install equipment anchor bolts as required by the equipment Manufacturer.

C. Provide accurately made templates for positioning anchor bolts.

3.9 EMBEDDED ITEMS

A. Placement
   1. Place embedded items to least impair strength of the structure. Obtain approval of locations for embedded items not shown on the Drawings before placement of concrete. Should locations of embedded items be detrimental to the strength of the structure, notify the Owner's Representative and relocate items as directed by the Owner.
   2. Do not cut or reposition reinforcing steel to facilitate installation of inserts, conduit, sleeves, anchor bolts, mechanical openings and similar items without prior approval of the Engineer, except that reinforcing bars may be moved one bar diameter or within tolerances specified in the Concrete Reinforcement section without approval of the Engineer as long as minimum specified reinforcing cover requirements are maintained.
   3. It is the Contractor's responsibility to coordinate the requirements for embedded items and to ensure that embedded items are properly placed.

B. Installation
   1. Accurately position and support embedded items against displacement during concrete placement.
   2. Voids in sleeves, inserts, anchors, etc., shall be filled temporarily with readily removable material to prevent the entry of concrete into the voids.
   3. Conduits, pipes and inserts of aluminum shall not be embedded in structural concrete unless effectively coated or covered to prevent aluminum-concrete reaction or electrolytic action between aluminum and steel.
   4. Except when plans for conduits and pipes are approved by the Engineer, conduits and pipes embedded within a slab, wall or beam shall satisfy the following:
      a. They shall not be larger in outside dimension than 1/3 the overall thickness of slab, wall or beam in which they are embedded.
      b. They shall not be spaced closer than three diameters or widths on center.
      c. They shall not significantly impair the strength of the member.

END OF SECTION

THIS PAGE INTENTIONALLY LEFT BLANK FOR DOUBLE SIDED PRINTING

SECTION 03_20_00

CONCRETE REINFORCEMENT

PART 1 GENERAL

1.1 SUMMARY

A. Formwork Requirement for cast-in-place concrete.

B. All listed iron and steel products used in this project must be produced in the United States. The term "iron and steel products" means the following products made primarily of iron or steel: lined or unlined pipes and fittings, manhole covers and other municipal castings, hydrants, tanks, flanges, pipe clamps and restraints, valves, structural steel, reinforced precast concrete, and construction materials. The deminimis and minor components waiver apply to this contract for minor components.

1.2 RELATED SECTIONS

A. Section 01_00_01 Basic Requirements

B. Section 01_33_01 General Submittal Requirements

C. Section 03_20_00 Concrete Formwork

D. Section 03_20_00 Cast-in-Place Concrete

E. The Contract Documents are a complete unit and complementary to each other. The individual Specification sections and other Contract Documents do not contain all cross references to "related work" or "related sections." It is the Contractor's responsibility to review the complete Contract Documents in order to properly scope, schedule and coordinate the work of any/all subcontractors, suppliers, and others on this project. Anything called out in one location of the Contract Documents is binding as if it were called out in all sections of the Contract Documents.

1.3 SUBMITTALS

A. Submittals for products and miscellaneous items in this specification section shall be submitted in accordance with Section 01_33_01 General Submittal Requirements and related submittal sections if included.

B. Shop Drawings:
   1. Show reinforcement fabrication, bar placement location, splices, spacing and bar designation, bar type, length, size, bending, number of bars, bar support type, and other pertinent information, including dimensions. Information must correspond directly to data listed on the bill of materials.
   2. Provide sufficient detail to permit placement of reinforcement without use of design drawings. Reproduction of design drawings for use as shop drawings is not permitted. Do not begin fabrication of reinforcing steel until after shop drawings have been reviewed by the Owner's Representative.

3. Detail shop drawings in accordance with ACI 315.
4. Rebar submittal shall include following information.
    a. Grade of bars.
    b. Table of bending dimensions, bar size, bar length, number of bars and spacing.
    c. The reinforcing shall be listed separately for each structural element (wall, slab, footing, beam, etc.). Each element shall be labeled on the bar list and clearly identified on the shop drawings.
    d. Each bar shall be identified such as corner bars, tie bars, vertical bars, etc.

1.4 REFERENCES

A. The Contractor and/or Manufacturer shall follow the standards listed below, except as otherwise specified herein. The latest revision or edition in effect at the time of bid opening shall be utilized.

B. American Society for Testing and Materials (ASTM):
1. ASTM A36: Standard Specification for Carbon Structural Steel.
2. ASTM A184: Standard Specification for Welded Deformed Steel Bar Mats for Concrete Reinforcement.
3. ASTM A615: Standard Specification for Deformed and Plain Carbon-Steel Bars for Concrete Reinforcement.
4. ASTM A706: Standard Specification for Low-Alloy Steel Deformed and Plain Bars for Concrete Reinforcement.
5. ASTM A775: Standard Specification for Epoxy-Coated Steel Reinforcing Bars.
6. ASTM A1064: Standard Specification for Carbon Steel Wire and Welded Wire Reinforcement, Plain and Deformed, for Concrete.

C. American Concrete Institute (ACI):
1. ACI 117: Specifications for Tolerances for Concrete Construction and Materials.
2. ACI 301: Specifications for Structural Concrete.
3. ACI 315: Details and Detailing of Concrete Reinforcement.
4. ACI 318: Building Code Requirements for Structural Concrete.
5. ACI 350: Code Requirements for Environmental Engineering Concrete Structures.

D. Concrete Reinforcing Steel Institute (CRSI):
1. CRSI: Manual of Standard Practice.
2. CRSI: Placing Reinforcing Bars.

E. American Welding Society (AWS):
1. D1.4: Structural Welding Code – Reinforcing Steel.

F. Wire Reinforcement Institute (WRI):
1. WWR-500-R: Manual of Standard Practice – Structural Welded Wire Reinforcement.

PART 2 PRODUCTS

2.1 REINFORCEMENT

A. Deformed Bars:
   1. Use Grade 60 deformed bars conforming to ASTM A615 unless indicated otherwise in the drawings.
   2. Where welding of reinforcement is called for in the Drawings, use Grade 60 deformed bars conforming to ASTM A706.

B. Welded Wire Fabric:
   1. Welded Deformed Wire Fabric. Conform to ASTM A1064 unless indicated otherwise in the drawings.
   2. Provide wire size, spacing and type as shown.

C. Marking: Clearly mark all bars and welded wire fabric with waterproof tags showing the number of bars, size, mark, length and yield strength.

2.2 MECHANICAL CONNECTIONS

A. Reinforcing steel bars shall be spliced with a mechanical connection when called for in the drawings.

B. Mechanical Couplers
   1. The mechanical coupler shall meet building code requirements for development in tension or compression. The coupler may be one of two types:
      a. Positive locking, taper threaded type coupler manufactured from high quality steel. The bar ends must be taper threaded using the manufacturer's requirements.
      b. Mechanical butt splices utilizing lock-shear bolts and internal serrated grip rails within the coupling sleeve.
   2. The mechanical coupler shall develop both tension and compression to a minimum of 125 percent of the specified yield strength of the reinforcing bar.
   3. Acceptable Products and Manufacturers:
      a. LENTON taper threaded couplers as manufactured by ERICO
      b. Bar Lock mechanical coupler system manufactured by Dayton Superior.

C. Metal Sleeve
   1. Provide with cast filler metal, capable of developing in tension or compression a minimum of 100 percent of specified ultimate tensile strength of the bar and not less than 150 percent of the specified yield strength.
   2. Acceptable Products and Manufacturers:
      a. CADWELD Full Tensile Strength Splices, as manufactured by ERICO.

2.3 TIE WIRE

A. Comply with ASTM A1022

B. Provide 16-gauge, black, soft-annealed wire where tie wire is not closer than 1 inch from surface of form after tying in place.

C. Provide nylon-, epoxy-, or plastic-coated tie wire to fasten non-coated reinforcing steel, unless tie wire is bent to maintain a minimum of 1 inch from surface of form.

D. Provide coated tire wire to fasten epoxy coated reinforcing steel.

2.4 BAR SUPPORTS

A. A. Provide chairs, riser bars, ties and other accessories made of metal, except as otherwise specified. Bar supports and accessories shall be of the sizes required to provide concrete cover as specified. Metal bar supports and accessories shall be Class 1 or 2 conforming to the requirements of CRSI Manual of Standard Practice.

B. For concrete surfaces exposed to view, where legs of wire bar supports contact forms, use CRSI Class 1 plastic-protected steel wire, all-plastic bar supports, or CRSI Class 2 stainless steel bar supports.

2.5 FABRICATION

A. In accordance with CRSI"s "Manual of Standard Practice".

B. Bending:
1. Shop fabricate bars to the shapes shown on the drawings by cold bending. Bends shall conform to the minimum bend diameters specified in ACI 318. Do not heat, straighten or rebend bars without specific written approval from the Engineer.
2. Field bending of bars is not permitted.

C. Splices:
1. Locate splices as shown on the drawings. Where it is necessary to splice reinforcement at locations other than shown on the drawings, the splices shall be clearly located in the Shop Drawings for review by the Engineer.
2. Use a minimum number of splices located at the points of minimum stress. Stagger splices in adjacent bars.
3. Length of lap splices shall be in accordance with ACI 315, unless called out in the Drawings. When there is a conflict between ACI 315 and the Drawings, the more restrictive provision shall apply.

D. Fabrication Tolerances:
1. Bars must conform to the fabrication tolerances listed in all reference specifications. When there is a conflict in the reference specifications the more restrictive requirement shall apply.

PART 3 EXECUTION

3.1 GENERAL

A. Meet all requirements of the ACI, CRSI and WRI documents referenced in this Section.

B. No field bending will be allowed.

3.2 CLEANING

A. Clean reinforcement of all scale, loose or flaky rust or other foreign material, including oil, mud or coating that will reduce the bond to concrete.

3.3 PLACING REINFORCING BARS

A. Placement in Forms:
   1. Use spacers, chairs, wire ties and other accessory items necessary to properly assemble, space and support reinforcing. Wire ties through forms and temporary spacers will not be allowed.
   2. Provide accessories of sufficient number, size and strength to adequately prevent deflection or displacement of reinforcement due to construction loads or concrete placement. Use appropriate accessories to position and support bolts, anchors and other embedded items. Tie reinforcing bars at each intersection and to accessories. Blocking reinforcement with concrete or masonry is prohibited.

B. Placement for Concrete on Ground:
   1. Support reinforcement on precast concrete blocks spaced at approximately 3 feet on centers each way. Use a minimum of one block for each 9 square feet. Tie blocks to at least one reinforcing bar using tie wires embedded in the block.

C. Placement Tolerances:
   1. Meet the placement tolerances listed in all reference specifications. When there is a conflict in the reference specifications the more restrictive requirement shall apply.

D. Interferences:
   1. If reinforcing interferes with the location of other reinforcing steel, conduits or embedded items, bars may be moved within specified tolerances or one bar diameter whichever is greater. If greater movement of bars is required to avoid interference, notify the Engineer. Do not cut reinforcement to install inserts, conduits, mechanical openings or other items without approval of the Engineer.

E. Protection, Spacing and Positioning:
   1. Conform to reviewed shop drawings, Project Drawings, and all applicable reference specifications. When there is a conflict in the reference specifications the more restrictive requirement shall apply.
   2. Bundle or space bars as approved on shop drawings, instead of bending where construction access through reinforcing is necessary.

F. Splices:
   1. Do not splice bars, except at locations shown on the Drawings or the reviewed Shop Drawings, without approval of the Engineer.
   2. Lap Splices: Tie securely with wire to prevent displacement of splices during placement of concrete.
   3. Stagger splices in adjacent bars.

G. Construction Joints.
   1. Place reinforcing continuous through construction joints.

H. Reinforcement Around Openings:
1. Place an equivalent area of steel around pipe or opening and extend on each side sufficiently to develop bond in each bar unless otherwise noted in the Drawings.
2. Refer to Details on Drawings for bar extension length of each side of opening.
3. Where welded wire fabric is used, provide extra reinforcing using fabric or deformed bars.

I. Bar Supports
1. Provide a sufficient number to prevent sagging, to prevent shifting, and to support loads during construction; but in no case less than quantities and at locations as indicated in ACI SP-66.
2. Do not use brick, broken concrete masonry units, spalls, rocks, wood or similar materials for supporting reinforcing steel.
3. Do not use give away bars that have less cover than required by the Contract Documents. Do not adjust location of reinforcement required by the Contract Documents to provide cover to the giveaway bars.

J. Tying of Bar Reinforcement
1. Fasten bars securely in place with wire ties.
2. Tie bars sufficiently often to prevent shifting.
3. Provide at least 3 ties in each bar length.
   a. Do not apply to dowel lap splices or to bars shorter than 4 feet, unless necessary for rigidity.
4. Tie slab bars at every intersection around periphery of slab.
5. Tie wall bars and slab bar intersections other than around periphery at not less than every fourth intersection, but at not greater than following maximum spacings:
6. After tying wire ties, bend ends of wire ties in towards the center of the concrete section.
   a. The cover for wire ties shall be the same as the cover requirements for reinforcing bars.

Bar Size	Slab Bar Spacing Inches	Wall Bar Spacing Inches
Bars Number 5 and Smaller	60	48
Bars Number 6 through Number 9	96	60
Bars Number 10 and Number 11	120	96

3.4 PLACING WELDED WIRE FABRIC

A. Install wire fabric in as long lengths as practicable. Lap adjoining pieces at least one full mesh plus 2 inches, or 6 inches, whichever is larger. Do not make end laps midway between supporting beams, or directly over beams of continuous structures. Offset end laps in adjacent widths to prevent continuous laps.

B. Tie laps and splices securely at ends and at least every 24 inches with 16-gauge black annealed steel wire.

C. Place welded wire fabric on concrete blocks at proper distance above bottom of slab and rigidly support equal to that furnished for typical deformed bar reinforced steel.

D. Do not use fabric that has been rolled. Install flat sheets only.

3.5 WELDING

A. Welding of reinforcement is not permitted unless called for in the Drawings or without written approval of the Engineer.

3.6 FIELD BENDING

A. Field bending of reinforcing steel bars is not permitted without written permission of the Engineer.

3.7 FIELD CUTTING

A. Reinforcing bars cut on the job shall be cut by shearing or sawing. Do not cut bars with a cutting torch.

3.8 MECHANICAL SPLICES AND CONNECTIONS

A. Use only in areas shown in the Drawings or specifically approved in writing by the Engineer.

B. Install as required by Manufacturer.

C. Carefully inspect each splice and verify that each component meets Manufacturer's requirements.

D. Maintain minimum edge distance and concrete cover.

END OF SECTION

THIS PAGE INTENTIONALLY LEFT BLANK FOR DOUBLE SIDED PRINTING

SECTION 03_21_18

EPOXY BONDING IN CONCRETE

PART 1 GENERAL

1.1 SUMMARY

A. Epoxy Bonding in concrete as required by this section of the Contract Documents, unless otherwise indicated specifically on individual plans and appropriate sections of Contract Documents.

1.2 RELATED SECTIONS

A. Section 01_00_01 Basic Requirements

B. Section 01_33_01 General Submittal Requirements

C. The Contract Documents are a complete unit and complementary to each other. The individual Specification sections and other Contract Documents do not contain all cross references to "related work" or "related sections." It is the Contractor's responsibility to review the complete Contract Documents in order to properly scope, schedule and coordinate the work of any/all subcontractors, suppliers, and others on this project. Anything called out in one location of the Contract Documents is binding as if it were called out in all sections of the Contract Documents.

1.3 SUBMITTALS

A. Submittals for products and miscellaneous items in this specification section shall be submitted in accordance with Section 01_33_01 General Submittal Requirements and related submittal sections and provisions of the Contract Documents.

1.4 REFERENCES

A. The Contractor and/or Manufacturer shall follow the standards listed below, except as otherwise specified herein. The latest revision or edition in effect at the time of bid opening shall be utilized.

B. American National Standards Institute (ANSI):
   1. Standard B212.15 – Carbide Tipped Masonry Drills and Blanks for Carbide Tipped Masonry Drills.

C. ASTM international (ASTM):
   1. C 881 – Standard Specification for Epoxy-Resin-Base Bonding Systems for Concrete.

D. ICC Evaluation Service, Inc. (ICC-ES):
   1. AC308 – Acceptance Criteria for Post-Installed Adhesive Anchors in Concrete Elements.

E. Society for Protective Coatings (SSPC):
1. Surface Preparation Standards (SP)
a. SP-1 – Solvent Cleaning.

PART 2 PRODUCTS

2.1 EPOXY ADHESIVE FOR SELF-CONTAINED CARTRIDGE SYSTEM

A. Epoxy adhesive shall have a current ICC Evaluation Service report documenting acceptance under AC308 for use with cracked concrete and for the seismic design categories specified.

B. Materials
1. In accordance with ASTM C 881, Type IV, Grade 3, Class B or C depending on site conditions.
2. 2-component, 100 percent solids, insensitive to moisture, and gray in color.
3. Cure temperature, pot life, and workability: Compatible with intended use and environmental conditions.

C. Packaging.
1. Furnished in side-by-side cartridges with resin and hardener components isolated until mixing through manufacturer's static mixing nozzle. Nozzle designed to thoroughly blend the components for injection from the nozzle directly into prepared hole.
2. Container markings: Include manufacturer's name, product name, batch number, mix ratio by volume, product expiration date, ANSI hazard classification, and appropriate ANSI handling precautions.

D. Manufacturers: One of the following or equal:
1. Hilti, Inc., Tulsa, OK: RE 500-SD.

PART 3 EXECUTION

3.1 GENERAL

A. Provide Epoxy Adhesive Packaged as Follows:
1. Disposable, self-contained cartridge system capable of dispensing both epoxy components in the proper mixing ratio, and fit into a manually or pneumatically operated caulking gun.
2. Dispense components through a mixing nozzle that thoroughly mixes components.

3.2 HOLE SIZING AND INSTALLATION

A. Drilling holes:
1. Determine location of reinforcing bars or other obstructions with a non- destructive indicator device, and mark locations with construction crayon on the surface of the concrete.
2. Do not damage or cut existing reinforcing bars, electrical conduits, or other items embedded in the existing concrete without acceptance by Engineer.

B. Hole drilling equipment:
   1. Electric or pneumatic rotary impact type with medium or light impact.
   2. Drill bits: Carbide-tipped in accordance with ANSI B212-15 unless otherwise recommended by the manufacturer or required as a "condition of use" in the ICC Evaluation Report submitted.
   3. Hollow drill bits with flushing air systems are preferred. Air supplied to hollow drill bits shall be free of oil, water, or other contaminants that will reduce bond.
   4. Where edge distances are less than 2 inches, use lighter impact equipment to prevent microcracking and concrete spalling during drilling process.

C. Hole diameter: Reinforcing bar diameter or all thread rod diameter plus 1/8 inch.

D. Obstructions in drill path:
   1. If an existing reinforcing bar or other obstruction is hit while drilling hole, stop drilling hole and fill the hole with drypack mortar. Relocate the hole to miss the obstruction and drill another hole. Repeat the above until the hole has been drilled to the required depth.
   2. Avoid drilling an excessive number of holes in an area of a structural member, which would excessively weaken the structural member and endanger the stability of the structure. Drypack holes which hit obstructions and allow drypack to reach strength equal to the existing concrete before drilling adjacent holes. Epoxy grout may be substituted for drypack when acceptable to Engineer.
   3. When existing reinforcing steel is encountered during drilling and when acceptable to Engineer, enlarge the hole by 1/8 inch, core through the existing reinforcing steel at the larger diameter, and resume drilling at original hole diameter.
   4. Bent bar reinforcing bars: Where edge distances are critical, and striking reinforcing steel is likely, and if acceptable to Engineer, drill hole at 10 degree angle or less from axis of reinforcing bar or all thread rod being installed.

E. Install reinforcing bars and all thread rods to depth, spacings, and locations as indicated on the Drawings.
   1. Do not install epoxy bonded all-thread rods or reinforcing bars in overhead applications.

F. Cleaning holes:
   1. Insert long air nozzle into hole and blow out loose dust. Use compressed air that is free of oil, water, or other contaminants that will reduce bond.
   2. Use a stiff bristle brush to vigorously brush hole to dislodge compacted drilling dust.
   3. Repeat step 1.
   4. Repeat above steps as required to remove drilling dust or other material that will reduce bond. The hole shall be clean and dry.

G. Cleaning reinforcing bars and all thread rods:
   1. Solvent clean reinforcing bar and all thread rods over the embedment length in accordance with SSPC SP-1 Solvent Cleaning. Provide an oil and grease free surface to promote bonding of adhesive to steel.
   2. Clean reinforcing bars and all thread rods over embedment length to bare metal. The reinforcing bars and all thread rods shall be free of oil, grease, paint, dirt, mill scale, rust, or other coatings that will reduce bond.

H. Filling hole with epoxy:
   1. Fill hole with epoxy before inserting the reinforcing bar or all thread rod. Fill hole with epoxy starting from bottom of hole. Fill hole without creating air voids.
   2. Fill hole with sufficient epoxy so that excess epoxy is extruded out of the hole when the reinforcing bar or all thread rod is inserted into the hole.
   3. Do not install epoxy prior to receiving epoxy manufacturer's onsite training.

3.1 MANUFACTURERS' SERVICES

A. Furnish manufacturer's representative to conduct jobsite training for proper installation, handling, and storage of epoxy, for personnel who will perform actual installation. Engineer may attend training sessions.

END OF SECTION

SECTION 03_30_00

CAST-IN-PLACE CONCRETE

PART 1 GENERAL

1.1 SUMMARY

A. Cast-in-place concrete work, as indicated on the drawings and specified herein.

B. All listed iron and steel products used in this project must be produced in the United States. The term "iron and steel products" means the following products made primarily of iron or steel: lined or unlined pipes and fittings, manhole covers and other municipal castings, hydrants, tanks, flanges, pipe clamps and restraints, valves, structural steel, reinforced precast concrete, and construction materials. The deminimis and minor components waiver apply to this contract for minor components.

1.2 RELATED SECTIONS

A. Section 01_00_01 Basic Requirements

B. Section 01_33_01 General Submittal Requirements

C. Section 03_11_00 Concrete Formwork

D. Section 03_20_00 Concrete Reinforcement

E. Section 03_15_20 Concrete Joints & Embedded Items

1.3 SUBMITTALS

A. Submittals for products and miscellaneous items in this specification section shall be submitted in accordance with Section 01_33_01 General Submittal Requirements and related submittal sections if included.

B. Submit mix designs for each specified concrete and grout type. Design data shall include the name of the concrete supplier; manufacturer/supplier and type of cement used; size and type of aggregate; proportional weights of cement, aggregate, and water per cubic yard of concrete; name and quantity of admixture used.

C. Concrete Mix Design
   1. Concrete mix design.
      a. Mixture Identification and intended use.
      b. Minimum 28-day compressive strength.
   2. Constituent quantities per cubic yard.
   3. Sources of all concrete mix components including coarse aggregate, fine aggregate, cement, water, admixtures, and pozzolans where included.
   4. Cement type and manufacturer, include chemical analysis (mill test report) for each cement type to be used.

5. Pozzolan type and source; include chemical analysis for each pozzolan type to be used.
6. Water/cement ratio, by weight.
7. Air content
8. Mix design slump.
9. Nominal maximum aggregate size.
10. Average compressive strengths conforming to the requirements of ACI 318 at 28 days.
11. Provide both average strengths and sample standard deviation. Provide results at 7 and 14 days if available.
12. Laboratory shrinkage test results for concrete mix designs, where specified.

D. Aggregate for Mix Design:
1. Laboratory sieve analysis, conforming to ASTM C33.
2. Verification that aggregate is not "deleterious," or "potentially deleterious." Provide documentation or other certification that aggregate does not contain deleterious substances and has been used without issues on previous projects.

E. Admixtures.
1. Submit Manufacturer's data brochures on all admixtures proposed for use and provide certification of compliance with specified ASTM standards for each admixture.

F. Submit Manufacturer's data sheets and product specifications for curing compounds and items specified in other Sections including form release agents, bonding agents, etc. Identify the locations where each will be used in the Work as a part of the submittal.

1.4 REFERENCES

A. The Contractor and/or Manufacturer shall follow the standards listed below, except as otherwise specified herein. The latest revision or edition in effect at the time of bid opening shall be utilized.

B. American Society for Testing and Materials (ASTM).
1. ASTM C31: Standard Practice for Making and Curing Concrete Test Specimens in the Field
2. ASTM C33: Standard Specification for Concrete Aggregates
3. ASTM C39: Standard Test Method for Compressive Strength of Cylindrical Concrete Specimens
4. ASTM C42: Standard Test Method for Obtaining and Testing Drilled Cores and Sawed Beams of Concrete
5. ASTM C87: Standard Test Method for Effect of Organic Impurities in Fine Aggregate on Strength of Mortar
6. ASTM C94: Standard Specification of Ready-Mixed Concrete
7. ASTM C109: Standard Test Method for Compressive Strength of Hydraulic Cement Mortars
8. ASTM C125: Terminology Relating to Concrete and Concrete Aggregates
9. ASTM C143: Standard Test Method for Slump of Hydraulic Cement Concrete
10. ASTM C150: Standard Specification for Portland Cement
11. ASTM C156: Standard Test Method for Water Retention Through Liquid Membrane- Forming-Curing Compounds for Concrete

12. ASTM C171: Standard Specification for Sheet Materials for Curing Concrete
13. ASTM C172: Standard Practice for Sampling Freshly Mixed Concrete
14. ASTM C173: Standard Test Method for Air Content of Freshly Mixed Concrete by the Volumetric Method
15. ASTM C191: Standard Test Method for Time of Setting of Hydraulic Cement by Vicat Needle
16. ASTM C192: Standard Practice for Making and Curing Concrete Test Specimens in the Laboratory
17. ASTM C231: Standard Test Method for Air Content of Freshly Mixed Concrete by the Pressure Method
18. ASTM C260: Standard Specification for Air-Entraining Admixtures for Concrete
19. ASTM C293: Standard Test Method for Flexural Strength of Concrete (Using Simple Beam with Center-Point Loading)
20. ASTM C309: Standard Specification for Liquid Membrane-Forming Compounds for Curing Concrete
21. ASTM C330: Standard Specification for Lightweight Aggregates for Structural Concrete
22. ASTM C494: Standard Specification for Chemical Admixtures for Concrete
23. ASTM C595: Standard Specification for Blended Hydraulic Cements
24. ASTM C579: Standard Test Methods for Compressive Strength of Chemical-Resistant Mortars, Grouts, Monolithic Surfacings, and Polymer Concretes
25. ASTM C580: Standard Test Method for Flexural Strength and Modulus of Elasticity of Chemical-Resistant Mortars, Grouts, Monolithic Surfacings, and Polymer Concretes
26. ASTM C595: Standard Specification for Blended Hydraulic Cements
27. ASTM C618: Standard Specification for Coal Fly Ash and Raw or Calcined Natural Pozzolan for Use in Concrete
28. ASTM C683: Standard Specification for Concrete Made by Volumetric Batching and Continuous Mixing
29. ASTM C806: Standard Test Method for Restrained Expansion of Expansive Cement Mortar
30. ASTM C827: Standard Test Method for Change in Height at Early Stages of Cylindrical Specimens of Cementitious Mixtures
31. ASTM C845: Standard Specification for Expansive Hydraulic Cement
32. ASTM C856: Standard Practice for Petrographic Examination of Hardened Concrete
33. ASTM C878: Standard Test Method for Restrained Expansion of Shrinkage-Compensating Concrete
34. ASTM C989: Standard Specification for Slag Cement for Use in Concrete and Mortars
35. ASTM C1017: Standard Specification for Chemical Admixtures for Use in Producing Flowing Concrete
36. ASTM C1077: Standard Practice for Agencies Testing Concrete and Concrete Aggregates for Use in Construction and Criteria for Testing Agency Evaluation
37. ASTM C1107: Standard Specification for Packaged Dry, Hydraulic-Cement Grout (Non-Shrink)
38. ASTM C1157: Standard Performance Specification for Hydraulic Cement
39. ASTM C1218: Standard Test Method for Water-Soluble Chloride in Mortar and Concrete
40. ASTM C1240: Standard Specification for Silica Fume used in Cementitious Mixtures
41. ASTM C1260: Test Method for Potential Alkali Reactivity of Aggregates (Mortar-Bar Method)

42. ASTM C1293: Standard Test Method for Determination of Length Change of Concrete Due to Alkali-Silica Reaction
43. ASTM C1602: Standard Specification for Mixing Water Used in the Production of Hydraulic Cement Concrete
44. ASTM E329: Standard Specification for Agencies Engaged in Construction Inspection, Testing, or Special Inspection

C. American Concrete Institute (ACI).
1. ACI 117: Specification for Tolerances for Concrete Construction and Materials and Commentary
2. ACI 211.1: Standard Practice for Selecting Proportions for Normal, Heavy-weight and Mass Concrete.
3. ACI 214: Guide to Strength Test Results of Concrete
4. ACI 223: Guide for the Use of Shrinkage Compensating Concrete
5. ACI 301: Specification for Structural Concrete
6. ACI 302.1: Guide for Concrete Floor and Slab Construction
7. ACI 304: Guide for Measuring, Mixing, Transporting & Placing Concrete
8. ACI 304.2R: Placing Concrete by Pumping Methods
9. ACI 305R: Guide to Hot Weather Concreting
10. ACI 305.1: Specification for Hot Weather Concreting
11. ACI 306R: Guide to Cold Weather Concreting
12. ACI 306.1: Standard Specification for Cold Weather Concreting
13. ACI 308: Guide to Curing Concrete
14. ACI 308.1: Specification for Curing Concrete
15. ACI 309: Guide for Consolidation of Concrete
16. ACI 318: Building Code Requirements for Structural Concrete.
17. ACI 350: Code Requirements for Environmental Engineering Concrete Structures

1.5 QUALITY ASSURANCE

A. Conform to ACI 305R when concreting during hot weather.

B. Conform to ACI 306R when concreting during cold weather.

C. Manufacturer's Qualifications:
1. Manufacturer must be certified by the National Ready Mix Concrete Association's Certification of Ready Mixed Concrete Production Facilities.

D. Concrete Consistency
1. Test for slump shall be performed at the job site immediately prior to placing in accordance with ASTM C143. Slump tests shall be performed for each batch of concrete to indicate workability and consistency from batch to batch.
2. If the slump is outside the allowed limits, the concrete shall be rejected. Concrete showing either poor cohesion or poor coating of the coarse aggregate with paste shall be remixed or rejected.
3. If the slump is within the allowable limit, but excessive bleeding, poor workability, or poor finishability are observed, the concrete shall be rejected and changes in the concrete mix shall be made only by an adjustment of one or more of the following:
   a. The gradation of aggregate.
   b. The proportion of fine and coarse aggregate.

c. The percentage of entrained air, within the allowable limits.

E. Concrete Temperature
1. Comply with ACI 301, ACI 306.1 and ACI 305.1
2. Concrete temperature shall be taken immediately before placement with the point of measurement being in the chute or bucket.
3. Perform temperature test for each batch and record result on batch ticket.
4. If fresh concrete temperature does not meet requirements in this section the concrete shall be rejected.

F. Concrete Air Content
1. Test for air content shall be made on a fresh concrete sample for each batch prior to placing in forms.
2. Air content for concrete made of ordinary aggregates having low absorption shall be made in accordance with either ASTM C231, or ASTM C173. If light weight aggregates or aggregates with high absorptions are used, use ASTM C173.
3. If air content of fresh concrete does not meet requirements specified in this Section, the concrete shall be rejected. Do not place concrete that does not meet the air entrainment requirements of this Section.

G. Compressive Strength
1. Compression test specimens shall be made, cured and tested in accordance with ASTM C31 and ASTM C39.
2. Compressive strength tests shall be made on cylinders at 7 and 28 days. The value of each test result shall be the average compressive strength of a minimum of 2 cylinders taken at the same time from the same batch of concrete.
3. Compressive test specimens shall be 6" x 12" cylinders; 4" x 8" cylinders are not permitted.
4. Sets of concrete test cylinders shall be cast for each concrete pour as follows.
   a. A "set" of test cylinders consists of a minimum of six cylinders, two to be broken and strengths averaged at seven days; and two broken and strengths averaged at 28 days. Two hold cylinders will remain unbroken so that they will be available to be broken upon unforeseen circumstances or upon the option of the Engineer to break cylinders at different times.
   b. A minimum of one "set" of cylinders will be made for each concrete pour up to 25 CY in volume. For pours larger than 25 CY, additional "sets" of cylinders will be made for each additional 25 CY of concrete poured.
5. Evaluation of compressive strength for compliance with design requirements will be conducted by the Engineer per ACI 318 – Section 26.12 based on the results of the 28 day test.

H. Failure to Meet Requirements
1. The Owner may withhold payment for any section of concrete which does not meet the requirements of the Plans and Specifications. Withheld payment shall be based upon unit prices established for concrete, if available. Payment shall be withheld until the unacceptable concrete has been repaired or removed and replaced or otherwise brought into conformance with the Plans and Specifications.
2. Concrete Strength
   a. If the 28 day strength test results fall below required values, additional curing may be performed and test cores may be obtained in accordance with ASTM C42 with approval of the Engineer. Additional curing, core

removal and testing, if allowed by the Engineer, shall be at the Contractor's expense.

b. If the strength results from test cores do not exhibit the required strength, the Engineer or Owner's Representative reserves the right to require strengthening, replacement of substandard materials and/or additional testing at the Contractor's expense. The choice of remedy is at the sole discretion of the Engineer or Owner's Representative.

3. Other Concrete Properties

a. If concrete properties besides strength do not meet required values, the Engineer may require concrete samples to be obtained in accordance with ASTM C42 and evaluated in accordance with ASTM C856 at the Contractor's expense.

b. If concrete properties besides strength do not meet required values, and the results of additional examination per ASTM C856 are deemed unsatisfactory at the sole discretion of the Engineer, the Owner reserves the right to require strengthening, replacement of substandard materials and/or additional testing at the Contractor's expense.

1.6 DESCRIPTION/DESIGN REQUIREMENTS

A. All concrete shall be 4,000 psi unless otherwise noted. See Section 2.4 for additional requirements.

B. Concrete shall not be placed in any form until formwork has been inspected by the Engineer and permission is given to start placing.

C. Notify Engineer a minimum of 48 hours prior to concrete placement.

D. Fly ash will not be accepted for use in mix designs

E. Provide PVC waterstop at all submerged joints and as outlined in the plans and other specification sections.

F. Retempering by adding water to concrete at the jobsite will not be permitted unless prior approval is obtained from the Engineer.

G. All slabs to receive 10ml vapor barrier prior to concrete placement

H. All cracks greater than 0.05" wide not located in control joints shall be sealed by cutting a bevel groove on the water side of the crack 1/2" to 3/4" wide and caulking with epoxy sealant. Crack widths shall be measured at the concrete surface.

PART 2 PRODUCTS

2.1 CONCRETE MATERIALS

A. Cement: ASTM C150, Type I/II, Type I – Only type of one brand of cement shall be used.

B. Coarse Aggregates: Shall consist of gravel, crushed gravel, crushed stone, air-cooled blast furnace slag, or a combination thereof, conforming to ASTM C-33 with a maximum size of

1½-inches. Where required due to minimum spacing of reinforcing steel, maximum size of coarse aggregate shall be reduced to 1-inch with prior written approvalof the Engineer.

C. Fine Aggregate: Shall conform to ASTM C-33 and shall be washed river sand composed of clean, uncoated grains of strong materials.

D. Abrasive aggregates shall be equal to fine (c.f.) "Alumdum" aggregate as manufactured by Norton Company, Worcester, Mass. or "Frictex NS" as manufactured by Sonneborn - Contech. Use only as approved by Engineer.

E. Water: Potable water free from detrimental chemicals and solids that will decrease the strength of the concrete.

F. Embedded Items: Embedded items shall be of the size and type shown or as needed for the application.

G. Curing Materials: Curing materials shall be burlap, impervious sheets, or membrane-forming compounds.

H. Dowels: Plain carbon steel bars, minimum yield point of 60,000 psi for use in slabs on grade.

I. Expansion Joint Filler Strips: Premolded nonextruding, resilient bituminous or non-bituminous type for use in concrete paving or construction, thickness as shown.

J. Form Materials: Wood, metal or other Engineer approved materials that will produce the specified finishes without adversely affecting the concrete surfaces in accordance with Section 03_11_00 Concrete Formwork.

K. Form Coating: Nonstaining form oil or form-release agent that will not deleteriously affect concrete surfaces nor impair subsequent applications.

L. Form Ties: Metal, factory-fabricated removable snap-off type, that will not leave holes less than 1/4 inch nor more than 1 inch deep and not more than 1 inch in diameter.

M. Joint Sealant: As approved by Engineer for sealing joints in concrete against moisture infiltration for specific application.

N. Reinforcement: Bar reinforcement shall be deformed, Grade 60 conforming to ASTM A615. Mesh reinforcement shall be welded wire fabric with wires at right angles to eachother. See Section 03_20_00 Concrete Reinforcement.

O. Bonding Agent: As approved by Engineer.

P. Admixtures: Air-entraining, retarders, and other admixtures as approved by Engineer
1. Air-entraining admixture: ASTM C260.
2. Water-Reducing Admixture: ASTM C494/C494M, Type A.
3. Retarding Admixture: ASTM C494/C494M, Type B.
4. Water-Reducing and -Retarding Admixture: ASTM C494/C494M, Type D.
5. High-Range, Water-Reducing Admixture: ASTM C494/C494M, Type F.

6. High-Range, Water-Reducing and -Retarding Admixture: ASTM C494/C494M, Type G.
7. Plasticizing and Retarding Admixture: ASTM C1017/C1017M, Type II.

2.2 ADMIXTURES

A. A retarding admixture, conforming to ASTM C-494, pre-tested with job materials under job conditions, may be used if approved by Engineer, whenever necessary to prevent cold joints due to the quantity of concrete placed, to permit revibration of the concrete, to offset the effects of high concrete temperature rise.

2.3 ACCESSORIES

A. Curing Compound: Concrete curing compound shall be of a nature and composition not deleterious to concrete and shall be of a standard and uniform quality ready for use as shipped by the manufacturer. At the time of use, the curing compound shall be in a thoroughly stirred condition. Curing compounds shall not be diluted by the addition of solvent or thinners, or be altered in any manner without the specific approval of and ina manner prescribed by the manufacturer. Curing compound shall conform to the requirements of ASTM C-309 Type 1.

1. The curing compound shall be sufficiently transparent and free from color so that there will be no permanent change in the color of the concrete. The compound shall contain, however, a temporary dye of sufficient color to make the membrane clearly visible for a period of at least four hours after application.

2.4 CONCRETE MIX QUALITY AND CONTROL

A. No fly ash will be permitted in mix designs.

B. Design: Concrete shall be composed of Portland cement, fine aggregate, coarse aggregate and water. All concrete shall be designed by an approved testing laboratory in accordance with the ACI Standard Recommended Practice for Selecting Proportions for Concrete (ACI-211) to produce the strength for each class of concrete specified, and with slumps and maximum sizes of coarse aggregate in accordance with the requirements outlined below.

C. Prior to placing any concrete, the Contractor shall submit for review mix designs for each specified concrete and grout type.

D. Concrete Classifications

Class	Min. 28-Day Compressive Strength (psi)	Coarse Aggregate Size (in.)	Max. Water Cement Ratio	Max. Slump (in.)	Min. Cement Content (lb. per CY)
A	4000	1.5 (No. 467)	0.45	5	517
B	3000	1.5 (No. 467)	0.50	4	470

C	4000	1.0 (No. 57)	0.45	4	564
D	5000	0.75 (No. 67)	0.45	5	611
E	1500	1.5 (No. 467)	0.70	4	376
F	4000	0.375 (No. 8)	0.45	8	611

E. Concrete Usage

Class	Usage
A	All reinforced concrete unless otherwise specified
B	Concrete Encasement; Sidewalks
C	Drilled Shafts; Pumped Concrete; Thin Wall Sections
D	Precast Concrete and Panels
E	Lean Concrete Backfill; Foundation Seal; Blocking/Cradling
F	Underground Duct Banks

F. In not specifically noted in the table above, concrete shall be 4,000 psi.

G. The slump shall not exceed the maximum specified above for the type of construction for which it is to be used. The 28-day compressive strength determined in accordance with current ASTM Specifications C-39 and C-31 and with specimens cured in accordance with C-31 shall not be less than that shown above for the specified class of concrete. No water will be added after the amount specified by the mix design.

H. If admixtures are used, slump shall be as approved by Engineer.

I. Production of Concrete: All ready-mixed concrete shall be batched, mixed and transported in accordance with "Specifications for Ready-Mixed Concrete (ASTM C-94)". Plant equipment and facilities shall conform to the "Check List for Certification of Ready-Mixed Concrete Production Facilities" of the National Ready-Mixed Concrete Association.

J. Laboratory Testing: The Owner shall engage an independent testing laboratory to conduct concrete tests. Unless otherwise informed the Contractor will be responsible for sampling concrete for test cylinders, recording, providing all materials required, and for making all slump tests in the field directed by the Engineer. All costs in connection with work performed by the laboratory shall be paid by the Owner. When cylinder reports indicate concrete does not meet strength requirements delineated in the Contract Documents, the Contractor shall be responsible for the costs of developing a redesign of the concrete mix.

K. At least one test shall be made on fresh concrete for each 60 cubic yards of each class of concrete (or fraction thereof) placed on any one day and in any event, not less than one test for each class of concrete each day it is used. Testing shall be done in accordance with the following ASTM Specifications, latest edition:

1. C-172 - Standard Method of Sampling Fresh concrete
2. C-31 - Standard Method of Making and Curing Concrete Compression & Flexure Test Specimens in the Field
3. C-39 - Standard Method of Test of Compressive Strength of Molded concrete Cylinders
4. C-143 - Standard Method of Slump Test for Consistency of Portland Cement Concrete

L. Before any concrete is poured, the Contractor shall construct a storage box in accordance with ASTM Specification C-31. Each set of tests shall consist of one slump test and three compression test cylinders. All cylinders shall be kept in the storage box for the first 24 hours. The three cylinders shall be laboratory cured and tested for adequacy of the design for strength of the concrete in accordance with ASTM Specification C-31. One cylinder shall be tested at seven days and two at twenty-eight days.

M. Failure of Concrete to Meet Strength Requirements: The concrete shall be considered acceptable if, for any one class of concrete, the average of all tests or any five consecutive tests is equal to or greater than the specified strength, provided that no more than one test of the five falls between 90 percent and 100 percent of the specified strength. The only cylinders to be used for determination of concrete acceptability will be those laboratory cured and tested at twenty-eight days. When it appears the tests of laboratory-cured cylinders will fail to meet these requirements, the Engineer may require changes in the proportions of concrete for the remainder of the work in order to meet the strength requirements. In addition, the Engineer may also require additional curing not to exceed a total of twenty-one days on portions of the concrete already poured.

N. The Engineer may also require tests in accordance with Methods of Securing, Preparing and Testing Specimen from Hardened Concrete for Compressive and Flexural Strengths (ASTM Specifications C-42) when the concrete cylinder tests fail to meet strength requirements. In the event there still is question as the quality of the concrete in the structure, the Engineer may require load tests for that portion where the questionable concrete has been placed. Such load tests will be made as outlined in Chapter 20 of American Concrete Institute Building Code. (ACI 318-71), and shall be at the expense of the Contractor.

O. Removal of Under Strength Concrete: If the above tests indicate that a particular batch of previously placed concrete is under strength, the Engineer may direct that the under strength batch be removed and replaced. The removal of the under strength concrete shall also include the removal of concrete that has obtained the required strength if the Engineer deems this necessary to obtain structural or visible continuity when the concrete is replaced.

P. The removal, and replacement of any under strength concrete, shall be made at no additional cost to the Owner. This shall include any new formwork required or any reinforcing steel that may be required. The Owner shall not be charged any additional costs for any extra work that is required because of the failure of any concrete to meet the minimum test requirements.

PART 3 EXECUTION

3.1 EXAMINATION

A. Verify requirements for concrete cover over reinforcement as referenced in Section 03_20_00 are met.

B. Verify that anchors, seats, plates, reinforcement and other items to be cast into concrete are accurately placed, positioned securely, and will not cause hardship in placing concrete.

3.2 PREPARATION

A. All items, including lines and grades, forms, waterstops, reinforcing, inserts, piping, electrical, plumbing and the Contractor's concreting materials and equipment shall be complete and in compliance with the plans and specifications before proceeding with concrete placement.

B. Concrete finishing shall be completed in daylight hours. When this is not possible, brilliantly light the work site so that all operations are plainly visible.

C. Water shall be removed from excavations before concrete is deposited. Hardened concrete, wood chips, shavings, and other debris shall be removed from interior of forms and inner surfaces of mixing and conveying equipment. Wood forms shall be oiled or, except in freezing weather, wetted with water in advance of pouring. Contractor shall verify that all reinforcement is properly place, aligned, and secured prior to pouring concrete and shall coordinate with Resident Project Representative.

D. Soil at bottom of foundation systems is subject to testing for soil bearing value by the testing laboratory. Place concrete immediately after approval of foundation excavations. Excavate and backfill as necessary to complete the concrete work. Place concrete on sub-grades that are well compacted to level and true grade. Before concrete is poured in areas between slabs on grade previously poured, recheck compaction of subgrades and if necessary, recompact to avoid settlement of slabs at joints. Seal extremely porous subgrades. Remove all ice, debris and excess water from subgrades. After completion of the concrete work, backfill all excavations.

E. Mix concrete only in quantities for immediate use. Discard concrete which has set; re-tempering is not permitted. **Completely discharge concrete at the site within one hour and 30 minutes after adding cement to aggregate. In hot weather, reduce this time to one hour or less to prevent stiffening of concrete before it is placed.**

F. If concrete arrives at the project with slump below that specified, water may be added only if the addition of water does not exceed either the maximum permissible water-cement ratio or maximum slump. Mix adjustments to obtain specified slump must be approved by the Engineer.

G. Protection from Adverse Weather
   1. If adverse weather is imminent, no concrete placement is permitted. Do not permit rainwater to increase mixing water or to damage the surface finish. If rainfall occurs after placing operations begin, provide adequate covering to protect the work.

3.3 CONVEYING

A. Concrete shall be conveyed from mixer to forms as rapidly as practicable and by methods which will prevent segregation and loss of ingredients. It shall be deposited as nearly as practicable in its final position. Chutes used shall be such that concrete slides in them and does not flow. Chutes, if permitted, shall have a slope of less than 1 on 2. Where a vertical drop greater than 5 feet is necessary, placement shall be through elephant trunks or similar devices to prevent segregation.

3.4 PLACING

A. Completely discharge concrete at the site within one hour and 30 minutes after adding cement to aggregate. In hot weather, reduce this time to one hour or less to prevent stiffening of concrete before it is placed.

B. Unless otherwise specified, all concrete shall be placed upon clean, damp surfaces free from running water, or upon properly consolidated fills, but never upon soft mud or dry, porous earth. The concrete shall be compacted and worked in an approved manner into all corners and angles of the forms and around reinforcement and embedded fixtures as to prevent segregation of the coarse aggregate. Construction of forms for the lifts of vertical.

C. Deposit concrete continuously in one layer or in horizontal layers of such thickness that no new concrete is placed on concrete that has hardened enough to cause seams or planes of weakness.
   1. If a section cannot be placed continuously, provide construction joints as indicated.
   2. Deposit concrete to avoid segregation.
   3. Deposit concrete in horizontal layers of depth not to exceed formwork design pressures and in a manner to avoid inclined construction joints.
   4. Consolidate placed concrete with mechanical vibrating equipment in accordance with ACI 301.
      a. Do not use vibrators to transport concrete inside forms.
      b. Insert and withdraw vibrators vertically at uniformly spaced locations to rapidly penetrate placed layer and at least 6 inches into preceding layer.
      c. Do not insert vibrators into lower layers of concrete that have begun to lose plasticity.
      d. At each insertion, limit duration of vibration to time necessary to consolidate concrete, and complete embedment of reinforcement and other embedded items without causing mixture constituents to segregate.

D. Deposit and consolidate concrete for floors and slabs in a continuous operation, within limits of construction joints, until placement of a panel or section is complete.
   1. Do not place concrete floors and slabs in a checkerboard sequence.
   2. Consolidate concrete during placement operations, so concrete is thoroughly worked around reinforcement and other embedded items and into corners.
   3. Maintain reinforcement in position on chairs during concrete placement.
   4. Screed slab surfaces with a straightedge and strike off to correct elevations.
   5. Level concrete, cut high areas, and fill low areas.
   6. Slope surfaces uniformly to drains where required.
   7. Begin initial floating using bull floats or darbies to form a uniform and open-textured surface plane, before excess bleedwater appears on the surface.

8. Do not further disturb slab surfaces before starting finishing operations.

3.5 VIBRATION

A. Consolidate concrete, including floor slabs on grade, by internal concrete vibrators supplemented by hand-spading, rodding, or tamping so that the concrete is thoroughly worked around reinforcement and embedded items and into the corners of forms. Consolidate each layer of concrete with previously placed layers in a manner that will eliminate all air or stone pockets which may cause honeycombing, pitting, or planes of weakness. Internal vibrators shall produce a minimum frequency of 7000 impulses per minute when submerged in concrete. Do not use vibrators to transport concrete. Insert and withdraw vibrators at uniformly spaced points not farther apart than the visible effectiveness of the machine. Duration of vibration shall be limited to time necessary to produce satisfactory consolidation without causing objectionable segregation. The vibrating equipment shall at all times be adequate in number of units and power to properly consolidate all concrete. Spare units shall be on hand as necessary to ensure such adequacy.

3.6 CONSTRUCTION JOINTS

A. Construction joints shall be in accordance with Section 03_15_20 – Concrete Joints & Embedded Items. Waterstops shall be installed in all construction joints below grade or in liquid containing structures as noted on the plans.

3.7 BONDING

A. Roughen surfaces of set concrete at all joints, except where bonding is obtained by use of a concrete bonding agent, and clean surfaces of laitance, coatings, loose particles, and foreign matter. Roughen surfaces in a manner to expose bonded aggregate uniformly and to not leave laitance, loose particles of aggregate, or damaged concrete at the surface.

B. Prepare for bonding of fresh concrete to new concrete that has set but is not fully cured, as follows:
   1. At joints between footings and walls and between walls and beams or slabs they support, and elsewhere unless otherwise specified herein, dampen, but do not saturate, the roughened and cleaned surface of set concrete immediately before placing fresh concrete.
   2. At joints in exposed work; at vertical joints in walls; at joints in girders, beams, supported slabs, and other structural members; and at joints designed to contain liquids; dampen, but do not saturate, the roughened and cleaned surface of set concrete and apply either a liberal coating of neat cement grout or a commercial bonding agent.
   3. Use neat cement grout consisting of equal parts Portland cement and fine aggregate by weight and not more than 6 gallons of water per sack of cement. Apply with a stiff broom or brush to a minimum thickness of 1/16". Deposit fresh concrete before cement grout has attained its initial set.

3.8 PATCHING

A. Any concrete which is not formed as shown on the Plans, or for any reason is out of alignment or level or shows a defective surface shall be considered as not conforming with

the intent of these Specifications and shall be removed from job by Contractor at his expense, unless the Engineer grants permission to patch defective area, which shall be done in accordance with the following procedures.

B. Permission to patch any such area shall not be considered a waiver of the right of the Engineer to require complete removal of defective work if patching does not, in the opinion of the Engineer, satisfactorily restore quality and appearance of surface. Suitable non-shrink, latex or epoxy mortar shall be used for patching and repairing defective surface if directed by the Engineer.

C. After removing forms, all concrete surfaces shall be inspected and any poor joints, void, stone pockets, all tie holes, or other defective areas shall be patched, if permitted by the Engineer. Where necessary, defective areas shall be chipped away to a depth of not less than 1" with edges perpendicular to the surface. Area to be patched and a space at least 6" wide entirely surrounding it shall be wetted to prevent absorption of water from the patching mortar. A grout of equal parts Portland cement and sand, with sufficient water to produce a brushing consistency, shall then be well brushed into the surface followed immediately by the patching mortar. The patch shall be made of the same material and of approximately the same proportions and shall not be richer than one part cement to three parts sand. White Portland cement shall be substituted for a part of the gray Portland cement to match color of the surrounding concrete. The proportion of white and gray cements shall be determined by making a trial patch. The amount of mixing water shall be as little as consistent with the requirements of handling and placing. The mortar shall be retempered without the addition of water by allowing it to stand for a period of one hour during which time it shall be mixed occasionally with a trowel to prevent setting.

D. The mortar shall be thoroughly compacted into place and screeded off so as to leave patch slightly higher than surrounding surface. It shall then be left undisturbed for a period of one to two hours to permit initial shrinkage before being finally finished. The patch shall be finished in such a manner as to match the adjoining surface. On exposed surfaces where unlined forms have been used, the final finish shall be obtained by striking off the surface with a straightedge spanning the patch and held parallel to the direction of the form marks.

E. Tie holes left by withdrawal of rods or the holes left by removal of ends of ties shall be filled solid with mortar after first being thoroughly wetted.

3.9 SLABS ON GRADE

A. The Contractor shall insure that subgrade has been thoroughly compacted and leveled prior to concrete placement. Sprinkle all sub-grades with water no more than half an hour prior to placing concrete.
   1. Place vapor barrier below interior slabs unless noted otherwise. Sprinkling of fill is not necessary when using vapor barrier. Lap vapor barrier 6" in direction of pour, and seal laps with specified mastic. Repair all ruptures of the vapor barrier that might occur before or during concrete pour.
   2. The Contractor shall insure that all reinforcing steel is located properly prior to pour, and that steel will not be vertically displaced during the pour.

3.10 EDGING

A. Edges exposed to view on the outside of structures, footings, pads and slabs, and all those in the inside of structures shall be chamfered, unless otherwise approved by the Engineer. Chamfer shall be at an angle of 45 degrees, as shown on the Plans. If so required by the Engineer, however, the Contractor shall provide square edges for any portion of the work.

3.11 SLAB FINISHES

A. Exterior Walks: The top surface shall be "slip-resistant" as follows:
   1. The surface shall be steel troweled as noted in Paragraph C below, and have a final finish applied by brushing lightly with a soft bristle brush to form a slightly roughed surface.

B. Interior slabs that are to receive a finish floor covering (this does not include ceramic tile covering) shall be finished by tamping the concrete with special tools to force the coarse aggregate below the surface, then screeding and floating with straightedges to bring the surface to the required finish level. While the concrete is still green but sufficiently hardened to bear a man's weight without deep imprint, it shall be wood floated to a true and even plane with no coarse aggregate visible. Sufficient pressure shall be used on the wood floats to bring moisture to the surface. After surface moisture has disappeared, surfaces shall be steel-trowelled to a smooth, even, impervious finish, free from trowel marks. After cement has set enough to ring the trowel, surface of all slabs shall be given a second steel trowelling to a burnished finish.

C. Interior slabs to receive fill or mortar setting bed shall be finished by tamping concrete with special tools to force coarse aggregate below the surface, and screeded with straightedges to bring surface to required finish plane. Surface shall be left roughened sufficiently to produce good bond with topping material.

D. Top and bottom slabs of all structures and water carrying conduits except as noted otherwise on the Plans shall be finished as follows: The top of the slab shall be screeded to grade and cross section; lightly tamped as required to bring up a good bed of mortar for finishing and re-screeded as necessary. The surface shall then be finished with a wood float and leveling darby. No further finish will be required on top slabs of structures or conduits which are to be buried. In the case of all exposed top slabs of structures and conduits, they shall be given a final wood float and a light broomed, slip resistant finish to a uniform surface which conforms with accuracy to required shape, slope and grade. Slabs shall be edged as appropriate.

E. All interior floor slabs shall be "slip resistant finish", unless called out otherwise, as follows: The top surface shall be steel trowelled as noted in Paragraph B above and have a final finish applied by brushing lightly with a soft bristle brush to form a slightly roughed surface.

F. The floor surfaces of basins in which raking mechanisms are to be installed shall be finished, as indicated on the Plans, by sweeping in cement grout with the mechanism. The cement grout to be used shall be composed of one part Portland cement and two parts sand by weight.

G. The sweeping-in process shall be performed in the presence of the Engineer or the Engineer's Representative or, if necessary, under the supervision of a factory representative of the equipment manufacturer.

H. The slab upon which the grout is to be applied shall be finished in accordance with the provisions of Paragraph D above except that after leveling and floating, it shall be raked in such a manner as to provide a good bond for the grout. Before grout is deposited on the slab, it shall be thoroughly cleaned, wet down with clean water, and lightly dusted with neat cement immediately prior to placement of the grout.

I. Concrete Hardener shall be applied to the floors where scheduled to be exposed concrete. Concrete surfaces to be treated must be thoroughly set and dry, clean and free of dust. Three applications of "lapidolith", "saniseal", "hornolith", "vitrox", or Engineer approved equal liquid are required, using one gallon per 100 square feet for the complete treatment. Apply hardener strictly according to the manufacturer's printed instructions. Any substitution for the specified hardeners must be of the magnesium fluosilicate or zinc fluosilicate types.

3.12 FINISH OTHER THAN FLOORS

A. All top surfaces, other than slabs, not covered by forms, and which are not to be covered by additional concrete or fill shall receive a wood float finish without additional mortar. Care shall be taken that no excess water is present when the finish is made. Other surfaces shall be brought to finished elevations and left true and regular. All exposed interior concrete shall be grouted smooth and give a cement wash of one part light colored Portland cement and two parts fine aggregate mixed with water to consistency of thick paint. Grout shall be cork or wood floated to fill all pits, air bubbles, and surface holes.

B. Excess grout shall be scraped off with a trowel and rubbed with burlap to remove any visible grout film. Surface shall be kept damp during setting period. The finish for any area shall be completed in same day and the limits of a finished area shall be made at natural breaks in finished surface.

C. Rubbed Finish: Unless otherwise indicated, all faces (except top surfaces of slabs) exposed to view, such as walls, grade beams, columns, beams, canopy soffits and fascias, etc. shall be finished as follows:
   1. Forms shall be removed and all fins removed, off-sets leveled, damaged places and depressions resulting from the removal of metal ties or other causes shall be carefully pointed with a mortar of sand and cement in the proportion which has been employed for the particular class of concrete treated.
   2. The surface film of all such pointed places shall be carefully removed before setting occurs.
   3. After the point has set sufficiently to permit it, all exposed surfaces shall be dampened and rubbed with a No. 16 carborundum stone, to a smooth even plane. Final rubbing shall be done with a No. 30 carborundum stone, or an abrasive of equal quality, to obtain an entire surface of a smooth texture and uniformity in color.
   4. Mortar or grout worked up during rubbing shall be promptly removed by sacking with burlap or other suitable means so that no visible grout film or paste will remain. A cement wash or plaster coat shall not be used.

5. All surfaces shall be finished uniformly smooth and washed clean. The rubbed finish for any area shall be completed in the same day and the limits of a finished area shall be made at natural breaks in the finished surface.
6. If the Contractor does not provide suitable surface finish using carborundum stones specified above the Engineer, without additional cost to the Owner, may require to use of a power operated grinding machine to produce the desired finish.

3.13 CURING

A. Unformed concrete surfaces shall be water cured to prevent check of the fresh concrete surface. Where drying conditions are severe, as determined by the Engineer, fog sprays shall be employed to prevent checking of the fresh concrete surface. Fog spraying shall be continued as specified until the finished surface has attained sufficient strength to permit flooding or covering with burlap mats. Where drying conditions are not severe, as determined by the Engineer, unformed concrete surfaces shall be covered with wet burlap mats as soon as the concrete has sufficiently set, and shall thereafter be kept under wet burlap. Comply with ACI 308.1.

B. Formed surfaces, both interior and exterior, shall be water cured by water sprays or under burlap mats beginning as soon as the forms are stripped. Prior to stripping of forms, the concrete and forms shall be kept moist by the water sprays. Comply with ACI 308.1.

C. Unless otherwise specified, surfaces shall be water cured for seven days after the concrete is placed.

D. After 48 hours of water cure, and with the acceptance of the Engineer, the curing of concrete surfaces may be completed by the curing compound method. Curing compounds shall be applied in strict conformance with the manufacturer's instructions. If the compound is applied to a surface which is later to be painted, the Contractor shall thoroughly sandblast the surface to remove all vestiges of the compound prior to concrete finishing. Curing compound shall not be used on any surfaces against which additional concrete or other finishing materials are to be bonded.

E. In all concrete structures, concrete made with normal Portland cement shall be prevented from drying for at least the first seven days after placing. Whenever the temperature of the surrounding air is between 40ºF and 60ºF, adequate provision shall be made for maintaining the temperature of concrete above 60ºF or the moist curing period shall be extended to ensure a compressive strength corresponding to that which would be secured under provisions of the previous part of this paragraph.

F. Whenever the temperature of surrounding air is below 40ºF, all concrete shall be maintained at a temperature of not less than 50ºF for at least 72 hours for normal concrete or for as much more time as is necessary to insure proper rate of curing of the concrete. The housing, covering or other protection used in connection with curing shall remain in place and intact at least 24 hours after the artificial heating is discontinued. No salt or other chlorides shall be used for prevention of freezing.

G. Protection from the Sun: All concrete shall be adequately protected from injurious action of sun in a manner satisfactory to the Engineer.

H. Temperature Control: During and at the conclusion of the specified curing period, means shall be provided to ensure that the temperature of the air immediately adjacent to the concrete does not fall more than 3ºF in any one hour nor more than 30ºF in any 24 hours.

3.14 CONCRETING IN COLD WEATHER

A. When the atmospheric temperature may be expected to drop below 40ºF at the time concrete is delivered to the work site, during placement, or at any time during the curing period, the following provisions also shall apply:
   1. Prevent damage to concrete due to early age freezing and limit rapid changes in temperature at early ages consistent with the requirements of ACI 306R, ACI 306.1 and the requirements in this Section.
   2. If the air temperature is at or below 40 degrees F, cold weather concreting shall be performed in accordance with ACI 306R and ACI 306.1. This includes cases where the temperature drops below 40 degrees F after concrete operations have been started. The temperature shall be taken in shade away from artificial heat.
   3. When air temperatures are at or below 40 degrees F, heated mixing water or a combination of heated mixing water and heated aggregates shall be used, if required, to raise the concrete temperature at placement to the minimum values (or greater) listed in ACI 306R – Chapter 5. The temperature of the heated water or aggregates shall not exceed 150 degrees F when entering the mixer.
   4. Concrete placement is not permitted when the air temperature is at or below 35 degrees F. The temperature shall be taken in shade away from artificial heat.
   5. Do not place concrete against a frozen subgrade or formwork that is at or below 35 F.
   6. Salts, chlorides, chemicals or other foreign materials shall not be mixed with the concrete to prevent freezing or act as an accelerator.
   7. When temperatures at or below 35 F may be expected during the curing period, the concrete shall be maintained at a temperature of at least 50 degrees F for five days or 70 degrees F for three days after placement. Rapid cooling or heating of concrete shall not be permitted.

B. Hot Weather Concreting.
   1. Hot weather concreting shall comply with ACI 305R and ACI 305.1. At air temperatures of 90 degrees F or above, concrete placement shall be in accordance with Hot Weather Concreting requirements in ACI 305R, ACI 305.1 and requirements in this Section.
   2. The temperature of the concrete when placed in the work shall not exceed 90 degrees F. Use chilled water or ice or other approved methods to reduce the temperature of the concrete as required.
   3. Concrete shall be placed in the forms without the addition of any more water than is required by design. No excess water may be added to the concrete surface to aid in finishing. Control of the initial set and extending the time for finishing may be accomplished through the use of admixtures in accordance with these Specifications.
   4. Plastic shrinkage cracking, due to rapid evaporation of moisture, shall be prevented. Concrete shall not be placed when the evaporation rate (actual or anticipated) equals or exceeds 0.2 pound per square foot per hour, as determined by Figure 4.2 in ACI 305R.

3.15 CONCRETING IN HOT WEATHER

A. When climatic or other conditions are such that the temperature of the concrete may reasonably be expected to exceed 90ºF at the time of delivery at the work site, during placement, or during the first 24 hours after placement, the following provisions also shall apply:

1. The Contractor shall maintain the temperature of the concrete below 90ºF during mixing, conveying, and placing. Methods used shall conform to "Recommended Practice for Hot Weather Concreting," ACI Standard 305.
2. The concrete shall be placed in the work immediately after mixing. Truck mixing shall be delayed until only time enough remains to accomplish it before the concrete is placed.
3. Exposed concrete surfaces, which tend to dry or set too rapidly, shall be continuously moistened by means of fog sprays or otherwise protected from drying during the time between placement and finishing, and after finishing.
4. Finishing of slabs and other exposed surfaces shall be started as soon as the condition of the concrete allows and shall be completed without delay.
5. Concrete surfaces exposed to the air shall be covered as soon as the concrete has hardened sufficiently and shall be kept continuously wet for at least the first 48 hours of the curing period, and for the entire curing period unless curing compound is applied as specified.
6. Formed surfaces shall be kept completely and continuously wet for the duration of curing period (prior to, during, and after form removal) or until curing compound is applied as specified.

3.16 EMBEDDED ITEMS, JOINTS & WATERSTOP

A. See Section 03_15_20 Concrete Joint & Embedded Items

3.17 DRY PACK MORTAR

A. Where surfaces are required to be built up with mortar, such surfaces shall be thoroughly roughened by brushing, completely cleaned, and coated with appropriate bonding compound before the application of the required mortar. The mortar shall be applied immediately following the application of the bonding compound in bands or strips to form a compact durable covering of the required thickness and shall be free from lumps and depression. Construction joints in the mortar shall be sloped to thin edges and, before application is resumed, the joint shall be thoroughly cleaned. Dry pack mortar shall be used for built-up surfaces, setting miscellaneous metal items, and correcting minor repairs and imperfections.

B. No mortar shall be applied during freezing weather unless adequate protection is provided.

C. The mortar shall be cured as specified for concrete.

3.18 MODIFICATION OF EXISTING CONCRETE

A. Where the work indicated on the Plans requires modification of existing concrete structures or concrete poured over six months previously to be removed or modified, the existing concrete shall be cut accurately to the lines required in the presence of the Engineer or the Engineer’s Representative. Concrete faces exposed to view shall be cut with a concrete

saw. The cutting shall be accomplished in a manner that preserves, free from cracks or other injuries, those parts of the existing structure that are to remain. Where the cut surface is to be left exposed, it shall be cleaned and faced with non-shrink grout and finished to match adjacent surface. Where new concrete or mortar is to be placed against existing concrete surfaces or surfaces that have been cut, such surfaces shall be thoroughly cleaned by sandblasting, and coated with bonding compound just prior to the placement of the new concrete. Bonding compounds shall be as specified herein. Depth of saw cut should be ¾" minimum. Unless otherwise indicated on the Plans or specified, continuity of reinforcing steel shall be obtained by either exposing bars to provide sufficient laps with new bars or by welding existing bars with new bars as specified. Where indicated, existing bars shall be exposed and fully developed by; embedding in new concrete.

3.19 PROTECTION OF CONCRETE

A. All surfaces shall be protected against injury. During the first 72 hours after placing the concrete, any wheeling, working or walking on the concrete shall not be permitted. All slabs subject to wear shall be covered with a layer of sand or other suitable material as soon as the concrete has set. Sisalcraft paper or other similar tough waterproof paper may also be used, provided all joints between adjacent strips of paper are carefully sealed. This does not alter the requirements for proper curing as specified herein.

B. No concrete slabs or top surfaces or walls shall be placed during rain unless acceptable protective shelter is provided, and during such weather, all concrete placed within the preceding 12 hours shall be protected with waterproof canvas or other suitable coverings. These shall be provided and kept ready at hand.

3.20 SURFACE REPAIRS

A. Patching Defective Areas:
   1. Repair and patch defective areas with cement mortar immediately after removal of forms. Use epoxy-based mortar for structural repairs.
   2. Before patching is performed, the Engineer shall be notified and provided sufficient time to observe extent of repairs required.
   3. Cut out honeycomb and rock pockets, down to solid concrete but, in no case, to a depth of less than 1". Where defective concrete extends to the depth of reinforcing steel or where reinforcing steel is exposed during concrete chipping, concrete shall be removed to a minimum depth of 3/4 inch clear beyond depth of reinforcing steel. Saw-cut perimeter or area to be patched to provide edges cut perpendicular to the concrete surface.
   4. For exposed-to-view surfaces, blend white Portland cement and standard Portland cement so that, when dry, the patching mortar will match the color of the surrounding concrete. Provide test areas at inconspicuous location to verify mixture and color match before proceeding with the patching. Compact mortar in place and strike off slightly higher than the surrounding surface.
   5. Fill holes extending through concrete by means of a plunger-type gun or other suitable device from the least exposed face, using a flush stop held at the exposed face to ensure complete filling.

B. Repair of Formed Surfaces:
   1. Repair exposed-to-view formed concrete surfaces, where possible, that contain defects which adversely affect the appearance of the finish. Remove and replace

the concrete having defective surfaces if the defects cannot be repaired to the satisfaction of the Engineer. Surface defects, as such, include color and texture irregularities, crack, spalls, air bubbles, honeycomb, rock pockets, and holes left by the rods and bolts; fins and other projections on the surface; and stain and other discolorations that cannot be removed by cleaning.

2. Repair concealed formed' concrete surfaces, where possible, that contain defects that adversely affect the durability of the concrete. If defects cannot be repaired, remove and replace the concrete having defective surfaces. Surface defects, as such, include cracks in excess of 0.01" wide, cracks of any width through nonreinforced sections, honeycomb, rock pockets, holes left by tie rods and bolts, and spalls except minor breakage at corner.

C. Repair of Uniformed Surfaces:

1. Test unformed surfaces, such as monolithic slabs, for smoothness and to verify surface plane to the tolerances specified for each surface and finish. Correct low and high areas as herein specified.
2. Test unformed surfaces sloped to drain for trueness of slop, in addition to smoothness, using a template having the required slope. Correct high and low areas as herein specified.
3. Repair finished unformed surfaces that contain defects which adversely affect the durability of the concrete. Surface defects, as such, include crazing, cracks in excess of 0.01" wide or which penetrate to the reinforcement or completely through nonreinforced sections regardless of width, spalling, popouts, honeycomb, rock pockets, and other objectionable conditions.
4. Correct high areas in unformed surfaces by grinding, after the concrete has cured sufficiently so that repairs can be made without damage to adjacent areas.
5. Correct low areas in unformed surfaces during or immediately after completion of surface finishing operations by cutting out the low areas and replacing with fresh concrete. Finish repaired areas to blend into adjacent concrete.
6. Repair defective areas, except random cracks and single holes not exceeding 1" diameter, by cutting out and replacing with fresh concrete. Remove defective areas to sound concrete with clean, square cuts and expose reinforcing steel with at least 3/4" clearance all around. Dampen all concrete surfaces in contact with patching concrete and brush with a neat cement grout coating, or use concrete bonding. agent. Place patching concrete before grout takes its initial set. Mix patching concrete of the same materials to provide concrete of the same type or class as the original adjacent concrete. Place, compact, and finish as required to blend with adjacent finished concrete. Cure in the same manner as adjacent concrete.
7. Repair isolated random cracks and single holes not over 1" in diameter by the dry-pack method. Groove the top of cracks, and cut out holes to sound concrete and clean of dust, dirt, and loose particles. Dampen all cleaned concrete surfaces and brush with a neat.cement grout coating. Place dry-pack before the cement grout takes its initial set. Mix dry-pack consisting of one part Portland cement to 2-1/2 parts fine aggregate passing a No. 16 mesh sieve, using only enough water as required for handling and placing. Compact dry-pack mixture in place and finish to match adjacent concrete. Keep patched areas continuously moist for not less than 72 hours.

END OF SECTION

THIS PAGE INTENTIONALLY LEFT BLANK FOR DOUBLE SIDED PRINTING

SECTION 03_35_00

CONCRETE FINISHES

PART 1 GENERAL

1.1 SUMMARY

A. Tooled concrete finishes of cast-in-place concrete.

1.2 RELATED SECTIONS

A. Section 01_00_01 Basic Requirements

B. Section 01_33_01 General Submittal Requirements

C. Section 03_11_00 Concrete Formwork

D. Section 03_20_00 Concrete Reinforcement

E. Section 03_30_00 Cast-in-Place Concrete

1.3 SUBMITTALS

A. Submittals for products and miscellaneous items in this specification section shall be submitted in accordance with Section 01_33_01 General Submittal Requirements and related submittal sections if included.

1.4 REFERENCES

A. The Contractor and/or Manufacturer shall follow the standards listed below, except as otherwise specified herein. The latest revision or edition in effect at the time of bid opening shall be utilized.

1.5 QUALITY ASSURANCE

A. Provide mock-up test panels for F4 & F5 finishes including tie-hole repair. Test panels serve as standard of quality and workmanship for project.

PART 2 PRODUCTS

2.1 MORTAR MIXES

A. Mortar mix for F4 finish: Consist of 1 part cement and 1-1/2 parts of fine sand passing Number 100 screen. Mix with enough water and emulsified bonding agent to have consistency of thick cream.

B. Mortar mix for F5 finish: Consist of 1 part cement to 1-1/2 parts of sand which passes Number 16 screen.

PART 3 EXECUTION

3.1 CONCRETE FINISHES

A. Cement for finishes:
   1. Addition of white cement may be required to produce finish which matches color of concrete to be finished.

B. Finish vertical concrete surfaces with one of the following finishes as indicated in the Finish Schedule:
   1. F1 finish: No special treatment other than repair defective work and fill depressions 1 inch or deeper and tie holes with mortar after removal of curing compound.
   2. F2 finish: No special treatment other than repair defective work, remove fins, fill depressions 1/2 inch or deeper and tie holes with mortar after removal of curing compound.
   3. F3 finish: Repair defective work, remove fins, offsets, and grind projections smooth. Fill depressions 1/4 inch or larger in depth or width and tie holes with mortar after removal of curing compound.
   4. F4 finish: Receive same finish as specified for F3 finish, and, in addition fill depressions and holes 1/16 inch or larger in width with mortar.
      a. "Brush-Off" sandblast surfaces prior to filling holes to expose all holes near surface of the concrete.
      b. Thoroughly wet surfaces and commence filling of pits, holes, and depressions while surfaces are still damp.
      c. Perform filling by rubbing mortar over entire area with clean burlap, sponge rubber floats, or trowels.
      d. Do not let any material remain on surfaces, except that within pits and depressions.
      e. Wipe surfaces clean and moist cure.
   5. F5 finish: Receive same finish as specified for F3 finish, and, in addition, receive special stoned finish, in accordance with following requirements:
      a. Remove forms and perform required repairs, patching, and pointing as specified in this Section.
      b. Wet surfaces thoroughly with brush and rub with hard wood float dipped in water containing 2 pounds of portland cement per gallon.
      c. Rub surfaces until form marks and projections have been removed.
      d. Spread grindings from rubbing operations uniformly over surface with brush in such manner as to fill pits and small voids.
      e. Moist cure brushed surfaces and allow to harden for 3 days:
         1) After curing, obtain final finish by rubbing with carborundum stone of approximately Number 50 grit until entire surfaces have smooth texture and are uniform in color.
         2) Continue curing for remainder of specified time.
      f. If any concrete surface is allowed to become too hard to finish in above specified manner, sandblast and wash related surfaces exposed to view, whether finished or not.
         1) While still damp, rub over surface, plastic mortar, as specified for brushed surfaces and handstoned with Number 60 grit carborundum stone, using additional mortar for brushed surfaces until surface is evenly filled without an excess of mortar.
         2) Continue stoning until surface is hard.

3) After moist curing for 3 days, make surface smooth in texture and uniform in color by use of Number 50 or Number 60 grit carborundum stone.
4) After stoning, continue curing until 7 day curing period is completed.

C. Finish horizontal concrete surfaces with one of the following finishes as indicated in the Finish Schedule after proper and adequate vibration and tamping:
1. S1 finish: Screeded to grade and leave without special finish.
2. S2 finish: Smooth steel trowel finish.
3. S3 finish: Steel trowel finish free from trowel marks. Provide smooth finish free of all irregularities.
4. S4 finish: Steel trowel finish, without local depressions or high points, followed by light hairbroom finish. Do not use stiff bristle brooms or brushes. Perform brooming parallel to slab-drainage. Provide resulting finish that is rough enough to provide nonskid finish. Finish is subject to review and acceptance by the Engineer.
5. S5 finish: Nonslip abrasive: After concrete has been screeded level and hardened enough to support man standing on a board, sprinkle abrasive from shake screen into surface at uniform rate of 25 pounds for each 100 square feet of surface area, wood float into finish, then trowel abrasive into surface with steel trowel properly exposing abrasive in surface as required to provide nonslip surface.
6. S6 finish: Roughened finish: After concrete has been screeded to grade, apply a roughened finish by use of a jitterbug roller or similar device.

D. Finish concrete floor surfaces to which surfacing material is applied: Finish smooth with tolerance within 1/8 inch in 10 feet in any direction from lines indicated on the Drawings.

3.2 CONCRETE FINISH SCHEDULE

A. Finish concrete surfaces as follows:
1. F4 finish for following vertical surfaces:
   a. Concrete surfaces specified or indicated to be painted.
   b. Concrete surfaces, interior or exterior, exposed to view.
2. Surfaces in open channels, basins, and similar structures:
   a. F3 finish for vertical surfaces which are normally below water surface.
   b. F4 finish for vertical surfaces located above normal water surface and exposed to view.
   c. Remove fins and fill tie holes from concrete surfaces located in closed boxes or channels where there is normally no access or passageway.
3. S1 finish for following surfaces:
   a. Projecting footings which are to be covered with dirt.
   b. Slab surfaces which are to be covered with concrete fill.
4. S2 finish for following surfaces:
   a. Tops of corbels.
   b. Tops of walls and beams not covered above in this Section.
   c. Tops of slabs not covered above in this Section.
   d. All other surfaces not specified to be finished otherwise.
5. S3 finish for following surfaces:
   a. Building and machine room floors which are not covered with surfacing material: Provide floors that are free from trowel marks.
6. S4 finish for following surfaces:

a. Exterior walkways.
b. Tops of exterior walls or beams which are to serve as walkways.
c. Tops of exterior walls or beams which are to support gratings.
d. Top surface of slabs for basins, channels, digesters, and similar structures.

7. S6 finish for following surfaces:
   a. Basin bottoms, or other similar slab surfaces, over which layer of basin bottom grout will be applied.

END OF SECTION

SECTION 03_60_00

GROUTING

PART 1 GENERAL

1.1 SUMMARY

A. Grouting in locations outlined and as required.

1.2 RELATED SECTIONS

A. Section 01_00_01 Basic Requirements

B. Section 01_33_01 General Submittal Requirements

1.3 SUBMITTALS

A. Submittals for products and miscellaneous items in this specification section shall be submitted in accordance with Section 01_33_01 General Submittal Requirements and related submittal sections if included.

B. Cement Grout & Mortar
   1. Mix Design
   2. Materials

C. Non-shrink Grout - Submit manufacturer's literature

1.4 REFERENCES

A. The Contractor and/or Manufacturer shall follow the standards listed below, except as otherwise specified herein. The latest revision or edition in effect at the time of bid opening shall be utilized.

B. ASTM International (ASTM):
   1. C 109 – Standard Test Method for Compressive Strength of Hydraulic Cement Mortars (using 2-inch or [50-millimeter] cube specimens).
   2. C 230 – Standard Specification for Flow Table for Use In Tests of Hydraulic Cement.
   3. C 531 – Standard Test Method for Liner Shrinkage and Coefficient of Thermal Expansion of Chemical-Resistant Mortars, Grouts, Monolithic Surfacings, and Polymer Concretes.
   4. C 579 – Standard Test Method for Compressive Strength of Chemical- Resistant Mortars, Grouts, and Monolithic Surfacings and Polymer Concretes.
   5. C 939 – Standard Test Method for Flow of Grout for Preplaced-Aggregate Concrete (Flow Cone Method).
   6. C 942 – Standard Test Method for Compressive Strength of Grouts for Preplaced-Aggregate Concrete in the Laboratory.
   7. C 1107 – Standard Specification for Packaged Dry, Hydraulic-Cement Grout (Non-shrink).

8. C 1181 – Standard Test Methods for Compressive Creep of Chemical- Resistant Polymer Machinery Grouts.

1.5 DELIVERY, HANDLING AND STORAGE

A. Deliver materials to the jobsite in their original, unopened packages or containers, clearly labeled with the manufacturer's product identification and printed instructions.

B. Store materials in a cool dry place and in accordance with the manufacturer's recommendations.

C. Handle materials in accordance with the manufacturer's instructions.

PART 2 PRODUCTS

2.1 MATERIALS

A. Non-shrink epoxy grout:
1. Manufacturers: One of the following:
   a. Five Star Products, Inc., Fairfield, CT, Five Star Epoxy Grout.
   b. Approved equal.
2. Non-shrink epoxy grout shall be a 100 percent solid, premeasured, prepackaged system containing a 2-component thermosetting epoxy resin and inert aggregate.
3. Maintain a flowable consistency for at least 45 minutes at 70 degrees Fahrenheit.
4. Shrinkage or expansion (less than 0.0006 inches/inch) when tested in accordance with ASTM C 531.
5. Minimum compressive strength: 10,000 pounds per square inch at 24 hours and 14,000 pounds per square inch at 7 days when tested in accordance with ASTM C 579, Method B.
6. Compressive creep: Not exceed 0.0027 inches/inch when tested under a 400 pounds per square inch constant load at 140 degrees Fahrenheit in accordance with ASTM C 1181.
7. Coefficient of thermal expansion: Not exceed 0.000018 inches per inch per degree Fahrenheit when tested in accordance with ASTM C 531, Method B

B. Non-shrink grout:
1. Manufacturers: One of the following:
   a. Five Star Products, Inc., Fairfield, CT, Five Star Grout.
   b. Approved equal.
2. In accordance with ASTM C 1107.
3. Proportioned and prepackaged cement-based mixture:
   a. It shall contain no metallic particles such as aluminum powder and no metallic aggregate such as iron filings.
   b. It shall require only the addition of potable water.
4. Water for pre-soaking, mixing, and curing: Potable water.
5. Free from the emergence of mixing water from within or the presence of water on its surface.
6. Remain at a minimum flowable consistency for at least 45 minutes after mixing at 45 degrees Fahrenheit to 90 degrees Fahrenheit when tested in accordance with ASTM C 230.

a. If at a fluid consistency, it shall be verified in accordance with ASTM C 939.

7. Dimensional stability (height change):
   a. In accordance with ASTM C 1107, volume-adjusting Grade B or C at 45 degrees Fahrenheit to 90 degrees Fahrenheit.
   b. Have 90 percent or greater bearing area under bases.
8. Have minimum compressive strengths at 45 degrees Fahrenheit to 90 degrees Fahrenheit in accordance with ASTM C 1107 for various periods from the time of placement, including 5,000 pounds per square inch at 28 days when tested in accordance with ASTM C 109 as modified by ASTM C 1107.

2.2 MIXES

A. Cement grout:
   1. Consist of concrete mix with coarse aggregate removed and water quantity adjusted as required.
   2. Use the same materials for cement grout that are used for concrete.
   3. Use water-to-cementitious materials ratio that is no more than that specified for concrete being repaired.
   4. For spreading over the surfaces of construction or cold joints. Mix with no more water used than allowed by water-to-cementitious materials ratio specified for concrete.

B. Cement mortar:
   1. Consist of concrete mix with coarse aggregate removed and water quantity adjusted as required.
   2. Use the same materials for cement mortar that are used for concrete.
   3. Use water-to-cementitious materials ratio that is no more than that specified for concrete being repaired.
   4. At exposed concrete surfaces not to be painted or submerged in water: Use sufficient white cement to make color of finished patch match that of surrounding concrete.

C. Dry-pack mortar:
   1. Mix in proportions by weight of 1 part portland cement to 2 parts of concrete sand.
      a. Portland cement: As specified in Section 03_30_00.
      b. Concrete sand: As specified in Section 03_30_00.
   2. Use only enough water so that resulting mortar will crumble to touch after being formed into ball by hand.

D. Epoxy grout:
   1. Consist of mixture of epoxy or epoxy gel and concrete sand.
      a. Epoxy: As specified in Section 03_63_01.
      b. Epoxy gel: As specified in Section 03_63_01.
      c. Sand: Clean, bagged, graded, and kiln dried silica sand.
   2. Proportioning:
      a. For horizontal work: Consist of mixture of 1 part epoxy with not more than 2 parts sand.
      b. For vertical or overhead work: Consist of 1 part concrete epoxy gel with not more than 2 parts sand.

E. Grout:

1. Mix in proportions by weight of 1 part portland cement to 4 parts of concrete sand.
   a. Portland cement: As specified in Section 03_30_00.
   b. Concrete sand: As specified in Section 03_30_00.

F. Non-shrink epoxy grout: Mix in accordance with manufacturer's installation instructions.

G. Non-shrink grout: Mix in accordance with manufacturer's installation instructions such that resulting mix has flowable consistency and is suitable for placing by pouring.

PART 3 EXECUTION

3.1 EXAMINATION

A. Inspect concrete surfaces to receive grout or mortar and verify that they are free of ice, frost, dirt, grease, oil, curing compounds, paints, impregnations, and all loose material or foreign matter likely to reduce the bond or performance of grout or mortar.

3.2 PREPARATION

A. Surface preparation:
   1. Remove grease, oil, dirt, curing compounds, laitance, and other deleterious materials that may affect bond from concrete and bottoms of baseplates.
   2. Roughen concrete surfaces by heavy sandblasting, waterblasting, chipping, or other mechanical means.
      a. Remove loose or broken concrete.
   3. Metal surfaces: Sandblast to a 2 to 3 mil peak-to-valley profile.

3.3 PLACEMENT

A. General:
   1. Use mortar mixer with moving paddles for mixing grouts. For cement grouts, pre-wet the mixer and empty out excess water before beginning mixing.

B. Cement grout:
   1. Exercise particular care in placing cement grout since it is required to furnish structural strength, impermeable water seal, or both.
   2. Do not use cement grout that has not been placed within 30 minutes after mixing.

C. Epoxy grouts:
   1. Use where indicated on the Drawings.
   2. Wet surfaces with epoxy for horizontal work or epoxy gel for vertical or overhead work prior to placing epoxy grout.

D. Non-shrink grout:
   1. Add non-shrink cement grout to a premeasured amount of water that does not exceed the manufacturer's maximum recommended water content.
   2. Mix in accordance with manufacturer's instructions to uniform consistency.
   3. May be drypacked, flowed, or pumped into place. Do not overwork grouts.
   4. Do not retemper grout by adding more water after stiffening.

E. Non-shrink epoxy grout:
1. Mix in complete units. Do not vary the ratio of components or add solvent to change the consistency of the mix.
2. Pour the hardener into the resin and mix for at least 1 minute and until mixture is uniform in color. Pour the epoxy into a mortar mixer wheelbarrow and add the aggregate. Mix until aggregate is uniformly wetted. Over mixing will cause air entrapment in the mix.
3. Keep temperature of non-shrink epoxy grout from exceeding manufacturer's recommendations.

F. Curing:
1. Cement based grouts:
a. Non-shrink grout: Cure in accordance with manufacturer's recommendations. Keep grout wet for a minimum of 7 days. Use wet burlap, a soaker hose, sun shading, ponding, and in extreme conditions, a combination of methods.
b. Maintain grout above 40 degrees Fahrenheit until it has attained a compressive strength of 3,000 pounds per square inch, or above 70 degrees Fahrenheit for a minimum of 24 hours to avoid damage from subsequent freezing.

G. Epoxy based grouts:
1. Cure grouts in accordance with manufacturers' recommendations.
a. Do not wet cure epoxy grouts.
2. Do not allow any surface in contact with epoxy grout to fall below 50 degrees Fahrenheit for a minimum of 48 hours after placement.

H. Grouting equipment bases and baseplates: As specified in Section 46_05_10.

I. Grouting other baseplates:
1. General:
a. All baseplate grouting shall take place from one side of a baseplate to the other in a continuous flow to avoid trapping air.
b. Hydrostatic head pressure shall be maintained by keeping the level of the grout in the headbox above the bottom of the baseplate. The headbox should be filled to the maximum level and the grout worked down.
2. Forms and headboxes:
a. Build forms for grouts of material with adequate strength to withstand the placement of grouts.
b. Forms shall be rigid and liquidtight. Caulk cracks and joints with an elastomeric sealant. Line forms with polyethylene for easy grout release. Forms carefully wax with 2 coats of heavy-duty paste wax will also be acceptable.
c. Forms shall be 4 to 6 inches higher than the baseplate on one side of the baseplate configuration when using head pressure for placement.
3. Non-shrink epoxy grout:
a. Cut back epoxy grout after setting. Install epoxy grout with chamfer edges built into the formwork.

END OF SECTION

THIS PAGE INTENTIONALLY LEFT BLANK FOR DOUBLE SIDED PRINTING

SECTION 03_60_01

BASIN BOTTOM GROUT

PART 1 GENERAL

1.1 SUMMARY

A. Grouting of basin bottoms where indicated on drawings

1.2 RELATED SECTIONS

A. Section 01_00_01 Basic Requirements

B. Section 01_33_01 General Submittal Requirements

C. Section 03_60_00 Grouting

1.3 SUBMITTALS

A. Submittals for products and miscellaneous items in this specification section shall be submitted in accordance with Section 01_33_01 General Submittal Requirements and related submittal sections if included.

1.4 REFERENCES

A. The Contractor and/or Manufacturer shall follow the standards listed below, except as otherwise specified herein. The latest revision or edition in effect at the time of bid opening shall be utilized.

B. International Concrete Repair Institute (ICRI):
   1. 310.2 - Selecting and Specifying Concrete Surface Preparation for Sealers, Coatings, and Polymer Overlays.

1.5 QUALITY ASSURANCE

A. Schedule meeting with Engineer prior to placement of grout to discuss method of placement.

PART 2 PRODUCTS

2.1 MATERIALS

A. Materials for grout:
   1. See Section 03_60_00 Grouting

2.2 GROUT MIXTURES

A. Grout mixture:
   1. One-part portland cement and 4-1/2 parts sand, by weight.
   2. Water content:
      a. Sufficient to allow workability for spreading grout with screeds attached to arms of equipment mechanism.
      b. Not excessive, to prevent formation of surface water, laitance, segregation, and to allow grout to stay in place after screeding.
   3. Do not use admixtures.

PART 3 EXECUTION

3.1 PREPARATION

A. Surface preparation:
   1. Basin bottom slab surface preparation:
      a. Concrete slab surfaces shall have rough texture, suitable for bonding grout.
      b. During concrete placement: finish concrete surface with jitterbug. Do not provide a smooth troweled surface.
      c. Roughen top of slab surface to a ICRI 310.2 surface profile of CSP-5 or rougher using one of the following methods:
         1) Abrasive blasting.
         2) Steel shotblasting.
         3) Ultra high-pressure water jetting.
      d. Clean entire slab surface as required to remove dirt, oil, curing compound, laitance, dust, and other matter that may prevent proper grout bonding.
      e. Saturate concrete slabs with water for minimum of 3 days just before placing grout. At time grout is placed, concrete shall be saturated and surface damp.

B. Equipment preparation:
   1. Preparation of equipment for grouting basin bottom slabs:
      a. Setting the screeds (where applicable / required):
         1) Bolt nominal 2-inch by 4-inch section of lumber blades on arms of equipment mechanism.
         2) Locate leading edge of lumber approximately 2 inches in front of blade and cut it parallel to centerline of arm.
         3) Securely nail nominal 2-inch by 6-inch screed board to ends of 2 by 4 lumber, in manner such that screed runs parallel to centerline of arm.
         4) Nail bent sheet metal to lower edge of screed board.
         5) Ensure that bottom of screed board is 1-1/2 inches below steel blades on arms of equipment mechanism.

3.2 APPLICATION

A. Grouting basin bottom slabs:
   1. Placement, general:

a. Place grout in accordance with equipment manufacturer's instructions and in accordance with limitations and precautions given in such instructions.
b. Bring promptly to attention of the Engineer, conflicts between manufacturer's instructions and this Section.

2. Placing grout:
a. Use grouting equipment to apply grout for basin bottom slabs.
b. Perform grouting continuously without interruptions until basin slab is covered.
c. Use misters or means acceptable to Engineer to keep grout from drying out before start of curing.

3. Following grout placement:
a. After completion of slab grouting, allow mechanism to run continuously until there is no more danger that grout sloughing may occur (where applicable).
b. Prevent dry clumps of grout or rocks from being caught under screed board and gouging finish surface of grout.

4. Corrections:
a. Before grout has set:
1) Where sloughing has occurred, remove grout from sloughed areas and place grout in low areas.
2) Repair gouges in grouted surface.

5. Curing:
a. After grout has set, water cure grout for 7 days.
b. Keep grout surface continuously wet for duration of curing period.

B. Tolerances:
1. For grouting basin bottom slabs:
a. Tolerance in elevation of finished grout surface: Plus or minus 1/8 inch.
1) Specified tolerance is more exacting than customary industry standards for slab finish.
2) Tolerance is required for proper operation of equipment.
b. Thickness of grout layer:
1) Not less than 1 inch at any point.
2) Provide average thickness of grout as indicated on the Drawings.

3.3 FIELD QUALITY CONTROL

A. Inspection:
1. Verify grout elevation tolerance on basin bottom slabs as follows:
a. After grout has set, operate grouting equipment with blades set to clear grout surface.
b. Under these conditions, blades shall not clear grout surface by more than 1/4 inch at any point:
1) Excess clearance: Correct as specified in article titled "Adjusting" in this Section.

3.4 ADJUSTING

A. Grouting basin bottom slabs:
1. After grout has set:

a. Where clearance between blades and grouted surface exceeds tolerance specified in this Section, grind high points in grout surface using terrazzo machine until specified tolerance is met.
b. Grout that has not bonded to concrete slab is not acceptable. Remove and replace such grout.

END OF SECTION

SECTION 03_70_00

MASS CONCRETE

PART 1 GENERAL

1.1 SUMMARY

A. Placement of concrete 3 feet thick or greater.

1.2 RELATED SECTIONS

A. Section 01_00_01 Basic Requirements

B. Section 01_33_01 General Submittal Requirements

1.3 SUBMITTALS

A. Submittals for products and miscellaneous items in this specification section shall be submitted in accordance with Section 01_33_01 General Submittal Requirements and related submittal sections if included.

B. Product data.

C. Thermal Control Plan.

D. Temperature Monitoring Program.

E. Temperature monitoring data:
   1. Tabular data of hourly temperature for each temperature sensor.
   2. Tabular data for hourly temperature differential for each temperature sensor.
   3. Plot of temperature and temperature differential for each temperature sensor.

F. Layout of cooling pipe system, if used, showing pipe sizes and material type, connections, location, spacing, method of support, and system for monitoring the temperature of the water in the cooling pipes.

1.4 REFERENCES

A. The Contractor and/or Manufacturer shall follow the standards listed below, except as otherwise specified herein. The latest revision or edition in effect at the time of bid opening shall be utilized.

1.5 DESCRIPTION/DESIGN REQUIREMENTS

A. Design requirements:
   1. Thermal Control Plan:
      a. General:

1) Submit a Thermal Control Plan signed by a licensed engineer, registered in the state where the project is located. Include the following as a minimum:
   a) Calculations for maximum concrete temperature and maximum differential concrete temperature for each mass concrete element.
   b) Concrete mix design.
   c) Duration and method of curing.
   d) Procedures to control concrete temperature at time of placement.
   e) Methods of controlling temperature differentials.
   f) Temperature sensor types and locations.
   g) Temperature monitoring and recording system.
   h) Field measures to ensure conformance with the maximum concrete temperature and maximum temperature differential requirements.
   i) Corrective measure to take if it appears the specified maximum temperature and differential temperature will be exceeded.
2) Have temperature control measures in place during the placement of concrete to limit the maximum initial concrete temperature rise to
20 degrees Fahrenheit.
3) Difference in temperature between concrete interior and surface temperatures shall not exceed 35 degrees Fahrenheit.
4) Allow the interior of the concrete to cool down and stabilize.
5) The maximum allowable concrete temperature: 145 degrees Fahrenheit.
6) Do not place mass concrete until the Engineer has accepted in writing, the Thermal Control Plan.

b. Pre-cooling of concrete:
   1) Cooling of the concrete mix, prior to placement, may be attained by following means:
      a) Cool batch water. Ice may be substituted for a portion of the batch water.
      b) Continuously spray coarse aggregate with water to cool the aggregate. Adjust the water content of the concrete mix to account for the cooling water.
      c) Alternative means proposed by the Contractor and acceptable to the Engineer.

c. Post-cooling of concrete:
   1) At Contractor's option, use embedded thin-walled piping for circulating water to control temperature gain in the previously cast concrete:
      a) Clearly indicate in the Thermal Control Plan if cooling piping will be embedded in the concrete.
      b) Do not install embedded piping within the top 20 inches of the slab or wall.
      c) Operate cooling pipe system for the duration of the cooling period.

d) After use of cooling pipes to cool the concrete is complete, fill pipes with grout.

d. Misting concrete:
1) Use fog sprayers to reduce the ambient air temperature and increase the humidity during concrete placement.

e. Curing concrete:
1) Water cure or plastic membrane cure as soon as possible following placement of concrete as specified in Section 03_30_00.
a) If water curing is used, use methods that minimize differential concrete temperature.
b) Consider the type of curing in the Thermal Control Plan.

2. Temperature monitoring program:
a. Temperature monitoring and recording system:
1) Consist of temperature sensors connected to a data acquisition system capable of printing, storing, and downloading data to a computer.
2) Locate temperature sensors such that the maximum temperature difference within a mass concrete element can be monitored.
3) As a minimum, monitor concrete temperatures at the calculated hottest location, on at least 2 outer faces, 2 corners, and top surfaces.

b. Temperature readings:
1) Automatically recorded on an hourly or more frequent basis.
2) Hourly temperature recording may be discontinued when:
a) Maximum internal temperature is falling.
b) Difference between the interior concrete temperature and the average daily air temperature is less than the allowable temperature difference for 3 consecutive days.
c) There are no mass concrete elements to be cast adjacent.
3) Print and submit data to the Engineer daily.

c. Methods of concrete consolidation: Prevent damage to the temperature monitoring and recording system.
1) Protect wiring connected to temperature sensors cast into the concrete to prevent movement.
2) Keep wire runs as short as possible.
3) Do not allow ends of the temperature sensors to come into contact with either a support or concrete form, or reinforcing bar.
4) When any equipment used in the temperature control and monitoring and recording system fails during the mass concrete construction operation, take immediate measures to correct the situation in accordance with Thermal Control Plan. Failure to conform to the temperature requirements will be cause for rejection of the concrete.

PART 2 PRODUCTS

2.1 MATERIALS

A. Concrete admixtures:
1. Air entraining admixture:

a. As specified in Section 03_30_00.

2. Retarding admixture:
   a. At the Contractor's option, a set retarding admixture may be used to control set time and minimize premature setting of concrete and formation of cold joints.
   b. As specified in Section 03_30_00.
   c. Dosage: In accordance with manufacturer's written requirements.
3. Water reducing admixture:
   a. As specified in Section 03_30_00.

B. Coarse aggregate:
1. As specified in Section 03_30_00.
2. Maximum coarse aggregate size: 1-1/2 inches.
3. Coarse aggregate grading: In accordance with of Table 2.5.8 of ACI 207.1R.

C. Fine aggregate:
1. As specified in Section 03_30_00.

D. Portland cement:
1. Type II, except as modified in this Section.
2. Contain no more than 12 percent Tricalcium Aluminate.
3. Sum of Tricalcium Aluminate and Tricalcium Silicate: Less than 58 percent.

E. Pozzolan:
1. As specified in Section 03_30_00.

F. Water and ice:
1. Mixing water: As specified in Section 03_30_00.
2. Water for making ice: Meet the requirements of mixing water as specified in Section 03_30_00.
3. Ice may be substitute for mixing water on a 1 to 1 ratio based on weight.

2.2 MIXES

A. As specified in Section 03_30_00, except as modified by this Section.

B. Concrete mix for mass concrete:
1. Water-cementitious material ratio: Not to exceed 0.45.
2. Entrained air content range: 2 to 4 percent.
3. Slump range: 2 inches to 4 inches.
4. Pozzolan:
   a. Minimum of 15 percent pozzolan.
   b. Maximum of 25 percent pozzolan.

PART 3 EXECUTION

3.1 INSTALLATION

A. Concrete placement: As specified in to Section 03_30_00 except as modified in this Section.

3.2 FIELD QUALITY CONTROL

A. Temperature Monitoring Program:
   1. Install a temperature monitoring system to measure temperatures in the interior and near the surface of the concrete.
   2. Continuously monitor the temperature of the interior of the concrete and surfaces of the concrete during the cooling period.
   3. Temperature monitoring data not conforming to requirements of this Section:
      a. Stop placing mass concrete.
      b. Concrete not conforming to temperature requirements of this Section will be rejected. Remove rejected mass concrete at Contractor's expense.
      c. Modify Thermal Control Plan and calculations to correct problem and resubmit.
      d. Do not place mass concrete until revised Thermal Control Plan and calculations have been accepted by Engineer.

END OF SECTION

THIS PAGE INTENTIONALLY LEFT BLANK FOR DOUBLE SIDED PRINTING

SECTION 05_05_20

ANCHORAGES

PART 1 GENERAL

1.1 SUMMARY

A. Anchorages as required by this section of the Contract Documents, unless otherwise indicated specifically on individual plans and appropriate sections of Contract Documents.

B. Where anchorage size / depth is not be provided on the Drawings, specified herein or recommended by the Manufacturer, the Contractor shall employ the services of an Oklahoma Registered Structural Engineer (SE) to provide sizing / depth along with a submittal cover letter stating submittal complies with all references and standards cited herein.

C. Any Drawing or Specification that conflicts with this Specification Section shall be brought to the attention of the Engineer prior to bid. When no clarification is provided the Contractor is to assume that more expensive product/system/item applies and shall be included in the Contractor's bid.

1.2 RELATED SECTIONS

A. Section 01_00_01 Basic Requirements

B. Section 01_33_01 General Submittal Requirements

C. Division 3 - Concrete

D. Division 5 - Metals

E. The Contract Documents are a complete unit and complementary to each other. The individual Specification sections and other Contract Documents do not contain all cross references to "related work" or "related sections." It is the Contractor's responsibility to review the complete Contract Documents in order to properly scope, schedule and coordinate the work of any/all subcontractors, suppliers, and others on this project. Anything called out in one location of the Contract Documents is binding as if it were called out in all sections of the Contract Documents.

1.3 SUBMITTALS

A. Submittals for products and miscellaneous items in this specification section shall be submitted in accordance with Section 01_33_01 General Submittal Requirements and related submittal sections and provisions of the Contract Documents.

1.4 REFERENCES

A. The Contractor and/or Manufacturer shall follow the standards listed below, except as otherwise specified herein. The latest revision or edition in effect at the time of bid opening shall be utilized.

B. ASTM
1. ASTM A 36, Specification for Carbon Structural Steel.
2. ASTM A 123, Specification for Zinc (Hot-Dip Galvanized) Coatings on Iron and Steel Products.
3. ASTM A 153, Specification for Zinc Coating (Hot-Dip) on Iron and Steel Hardware.
4. ASTM A 307, Specification for Carbon Steel Bolts and Studs, 60,000 psi Tensile Strength.
5. ASTM A 484, Specification for General Requirements for Stainless and Heat-Resisting Steel Bars, Billets and Forgings.
6. ASTM A 525, Specification for General Requirements for Steel Sheet, Zinc- Coated (Galvanized) by the Hot-Dip Process.
7. ASTM A 536, Specification for Ductile Iron Castings.
8. ASTM A 570, Specification for Steel, Sheet and Strip, Carbon, Hot-Rolled, Structural Quality.
9. ASTM B 633, Specification for Electrodeposited Coatings of Zinc on Iron and Steel.
10. ASTM F 593, Stainless Steel Bolts; Hex Cap Screws, and Studs.

C. Federal Specifications WW-H-171E for Malleable Iron.

D. ICBO, International Conference of Building Officials.

E. International Building Code.

F. Inserts shall be ICBO, UL, or FM approved.

G. Toggle Bolts: Federal Specification FF-B-588C, Type I, Class A, Style 1.

PART 2 PRODUCTS

2.1 DESIGN CRITERIA

A. When the size, length or load carrying capacity of an anchorage is not shown on the Drawings, provide the following:
1. For anchor bolts (cast-in-place), provide the size, length and capacity required to carry the design load based on the values and requirements given in the International Building Code.
2. For concrete anchors (adhesive types) and concrete inserts, provide the size, length, type, and capacity required to carry the design load based on the values and requirements given in the ICBO Evaluation Report, or similar certifications by UL or FM, for the anchor to be used. Alternately the capacity may be based on independent testing lab capacities for tension and shear strength using a minimum safety factor of four. Consideration of reduced capacity due to spacing and edge distance shall be made.

B. Determine design loads as follows:
1. For equipment anchors, use the design load recommended by the equipment manufacturer and approved by Engineer.
2. For pipe hangers and supports, use the total weight of: pipe, fittings, and water contained in pipe, plus the full weight of valves and accessories located between the hanger or support in question.
3. Concrete anchors shall develop ultimate shear and pull-out loads of not less than the following values in 4,000 psi concrete:

Bolt Diameter (Inches)	Min. Shear (Pounds)	Min. Pull-Out Load (Pounds)
1/2	5,000	7,600
5/8	8,000	12,000
3/4	11,500	17,000
7/8	15,700	20,400
1	20,500	28,400

2.2 MATERIALS

A. Anchor Bolts:
1. Provide stainless steel bolts and hardware complying with ASTM F 593, AISI Type 316 headed or non-headed type with Nitronic 60 stainless steel nuts and locknuts, unless otherwise indicated.
2. For equipment, provide anchor bolts, which meet the equipment manufacturer's recommendations for size, material, and strength. Anchors shall be Type 316 stainless steel.
3. Provide anchor bolts as shown on the Drawings or as required to secure structural steel to concrete or masonry.
4. Locate and accurately set the anchor bolts using templates or other devices as required.
5. Protect threads and shank from damage during installation of equipment and structural steel.
6. Comply with manufacturer’s required embedment length and necessary anchor bolt projection.

B. Adhesive Anchors:
1. Provide stainless steel adhesive anchors complying with ASTM F 593, AISI Type 316 with Nitronic 60 stainless steel nuts and locknuts.
2. Anchors shall be of the size required for the concrete strength specified.
3. Adhesive anchors shall consist of threaded rods or bolts anchored with an adhesive system into hardened concrete. The adhesive system shall use a two-component adhesive mix and shall be injected with a static mixing nozzle following manufacturer’s instructions. The embedment depth of the rod/bolt shall provide a minimum allowable bond strength that is equal to the allowable tensile capacity of the rod/bolt, unless noted otherwise on the Drawings.
4. Product and Manufacturer:
   a. HIT HY-150 Injection Adhesive Anchor System, as manufactured by Hilti. Use Hilti Hit ICE where ambient temperatures are below 45 degrees F.
   b. Acrylic Tie or Epoxy-Tie ET, as manufactured by Simpson.
5. Do not use adhesive anchors to support overhead pipe or equipment.

C. Concrete Inserts:
   1. For piping, grating, floor plate and masonry lintels, provide malleable iron inserts. Comply with Federal Specification WW-H-171E (Type 18). Provide those recommended by the manufacturer for the required loading.
   2. Finish shall be black.
   3. Product and Manufacturer: Provide inserts by one of the following:
      a. Figure 282, as manufactured by ITT Grinnell.
      b. No. 380, as manufactured by Hohmann and Barnard, Incorporated.

D. Toggle Bolts:
   1. Provide spring-wing toggle bolts, with two-piece wings.
   2. Provide Type 316 stainless steel bolts.
   3. Product and Manufacturer: Provide toggle bolts by one of the following:
      a. Hilti.
      b. Simpson.

E. Powder activated fasteners shall not be used.

F. Expansion anchors shall not be used.

PART 3 EXECUTION

3.1 INSPECTION

A. Contractor shall examine areas and conditions under which anchor bolts, toggle bolts and concrete insert Work is to be installed, and notify Engineer, in writing, of conditions detrimental to proper and timely completion of Work. Do not proceed with Work until unsatisfactory conditions have been corrected in a manner acceptable to Engineer.

3.2 INSTALLATION

A. Assure that embedded items are protected from damage and are not filled in with concrete.

B. Use concrete inserts for pipe hangers and supports for the pipe size and loading recommended by the insert manufacturer.

C. Use toggle bolts for fastening brackets and other elements onto masonry units.

D. For the adhesive anchors and adhesive material, Contractor shall comply with the manufacturer's installation instructions on the hole diameter and depth required to fully develop the tensile strength of the adhesive anchor or reinforcing bar. Contractor shall properly clean out the hole utilizing a wire brush and compressed air to remove all loose material from the hole, prior to installing adhesive capsules or material. Refer to the Drawings for details.

E. Use torque wrench for all anchor installations and torque to manufacturer recommendations.

3.3 CLEANING

A. After embedding concrete is placed, remove protection and clean bolts and inserts.

3.4 FIELD QUALITY CONTROL

A. Contractor shall employ a testing laboratory to perform field quality testing of installed anchors. Owner representative shall determine the level of testing which is required for the various types of adhesive anchors and anchor bolts. A minimum of ten percent of the adhesive anchors are to be tested to 50 percent of the ultimate tensile capacity of the adhesive anchor as published in the manufacturer's catalogue.

B. If failure of any of the adhesive anchors or reinforcing bars occurs, Contractor will be required test the remaining 90 percent of anchors.

C. Contractor shall correct improper workmanship, remove and replace, or correct as directed by the Engineer, all adhesive anchors or bars found unacceptable or deficient, at no additional cost to the Owner.

D. Contractor shall pay for all corrections and subsequent tests required to confirm the integrity of the adhesive anchor or bar.

E. The testing and inspection agency shall complete a report on each area. The report should summarize the observations made by the inspector and be submitted to Engineer.

F. Provide access for the testing agency to places where Work is being produced so that required inspection and testing can be accomplished.

END OF SECTION

THIS PAGE INTENTIONALLY LEFT BLANK FOR DOUBLE SIDED PRINTING

SECTION 05_05_25

MECHANICAL ANCHORING

PART 1 GENERAL

1.1 SUMMARY

A. Mechanical anchoring as required by this section of the Contract Documents, unless otherwise indicated specifically on individual plans and appropriate sections of Contract Documents.

B. Where anchorage size / depth is not be provided on the Drawings, specified herein or recommended by the Manufacturer, provide a letter sealed by a Licensed Professional Structural Engineer in the State which the project will be built stating that the proposed cover plates and details have been designed and detailed under their supervision and meet all codes referenced by this Section and requirements of this Section.

C. Any Drawing or Specification that conflicts with this Specification Section shall be brought to the attention of the Engineer prior to bid. When no clarification is provided the Contractor is to assume that more expensive product/system/item applies and shall be included in the Contractor's bid.

1.2 RELATED SECTIONS

A. Section 01_00_01 Basic Requirements

B. Section 01_33_01 General Submittal Requirements

C. Division 3 - Concrete

D. Division 5 - Metals

E. The Contract Documents are a complete unit and complementary to each other. The individual Specification sections and other Contract Documents do not contain all cross references to "related work" or "related sections." It is the Contractor's responsibility to review the complete Contract Documents in order to properly scope, schedule and coordinate the work of any/all subcontractors, suppliers, and others on this project. Anything called out in one location of the Contract Documents is binding as if it were called out in all sections of the Contract Documents.

1.3 SUBMITTALS

A. Submittals for products and miscellaneous items in this specification section shall be submitted in accordance with Section 01_33_01 General Submittal Requirements and related submittal sections and provisions of the Contract Documents.

1.4 REFERENCES

A. The Contractor and/or Manufacturer shall follow the standards listed below, except as otherwise specified herein. The latest revision or edition in effect at the time of bid opening shall be utilized.

B. American Concrete Institute (ACI)
1. 355.2 – Qualification of Post-Installed Mechanical Anchors in Concrete & Commentary.

C. American National Standards Institute (ANSI):
1. B212.15 – Cutting Tools – Carbide-tipped Masonry Drills and Blanks for Carbide-tipped Masonry Drills.

D. American Welding Society (AWS):
1. D1.1 – Structural Welding Code – Steel.
2. D1.6 – Structural Welding Code – Stainless Steel.

E. ASTM International (ASTM):
1. A 29 – Standard Specification for Steel Bars, Carbon and Alloy, Hot-Wrought, General Requirements for.
2. A 36 – Standard Specification for Carbon Structural Steel.
3. A 53 – Standard Specification for Pipe, Steel, Black and Hot-Dipped, Zinc- Coated, Welded and Seamless.
4. A 108 – Standard Specification for Steel Bars, Carbon and Alloy, Cold Finished.
5. A 123 – Standard Specification for Zinc (Hot-Dip Galvanized) Coatings on Iron and Steel Products.
6. A 153 – Standard Specification for Zinc Coating (Hot-Dip) on Iron and Steel Hardware.
7. A 193 – Standard Specification for Alloy Steel and Stainless Steel Bolting for High Temperature or High Pressure Service and Other Special Purpose Applications.
8. A 194 – Standard Specification for Carbon and Alloy Steel Nuts for Bolts for High Pressure or High Temperature Service, or Both.
9. A 240 – Standard Specification for Chromium and Chromium Nickel Stainless Steel Plate, Sheet, and Strip for Pressure Vessels and for General Applications.
10. A 308 – Standard Specification for Steel Sheet, Terne (Lead-Tin Alloy) Coated by the Hot-Dip Process.
11. A 496 – Standard Specification for Steel Wire, Deformed, for Concrete Reinforcement.
12. A 563 – Standard Specification for Carbon and Alloy Steel Nuts.
13. B 633 – Standard Specification for *Electrodeposited* Coatings of Zinc on Iron and Steel.
14. B 695 – Standard Specification for Coatings of Zinc Mechanically Deposited on Iron and Steel.
15. E 488 – Standard Test Methods for Strength of Anchors in Concrete Elements.
16. F 436 – Standard Specification for Hardened Steel Washers.
17. F 1554 – Standard Specification for Anchor Bolts, Steel, 36, 55 and 105-ksi Yield Strength.

F. International Code Council Evaluation Service, Inc. (ICC-ES):

1. AC01 – Acceptance Criteria for Expansion Anchors in Masonry Elements.

G. AC106 – Acceptance Criteria for Predrilled Fasteners (Screw Anchors) in Masonry. AC193 – Acceptance Criteria for Mechanical Anchors in Concrete Elements.

PART 2 PRODUCTS

2.1 MANUFACTURED UNITS

A. General:
1. Furnish threaded fasteners with flat washers and hex nuts fabricated from materials corresponding to the material used for threaded portion of the anchor.
   a. Cast-in anchors: Provide flat washers and nuts as listed in the ASTM standard for the anchor materials specified.
   b. Post-installed anchors: Provide flat washers and nuts supplied for that product by the manufacturer of each anchor.
2. Size of anchors and fasteners, including diameter and length or minimum effective embedment depth: As indicated on the Drawings or as specified in this Section. In the event of conflicts, contact Engineer for clarification.
3. Where anchors and connections are not specifically indicated on the Drawings or specified, their material, size and form shall be equivalent in quality and workmanship to items specified.

B. Materials:
1. Provide and install anchors of materials as in this Section.

2.2 CAST-IN ANCHORS AND FASTENERS

A. Anchor bolts:
1. Description:
   a. Straight steel rod having one end with integrally forged head, and one threaded end. Embedded into concrete with the headed end cast into concrete at the effective embedment depth indicated on the Drawings or specified, and with the threaded end left to project clear of concrete face as required for the connection to be made.
   b. Furnish anchor bolts with heavy hex forged head or equivalent acceptable to Engineer.
      1) Rods or bars with angle bend for embedment in concrete (i.e.: "L" or "J" shaped anchor bolts) are not permitted in the Work.
2. Materials:
   a. Type 316 stainless steel.
      1) Surfaces descaled, pickled, and passivated in accordance with ASTM A 308.
      2) Bolts: ASTM A 193, Grade B8M, Class 1, heavy hex.
      3) Nuts: ASTM A 194, Grade 8M, heavy hex.
      4) Washers: Type 316 stainless steel.

B. Anchor rods:
1. Description: Straight steel rod having threads on each end or continuously threaded from end to end. One threaded end is fitted with nuts or plates and embedded in

concrete to the effective depth indicated on the Drawings, leaving the opposite threaded end to project clear of the concrete face as required for the connection to be made at that location.

2. Materials:
   a. Stainless steel: Type 316.
      1) Surfaces descaled, pickled, and passivated in accordance with ASTM A 308.
      2) Rod: ASTM A 193, Grade B8M, Class 1.
      3) Nuts: ASTM A 194, Grade 8M.
      4) Washers: Type 316 stainless steel.
      5) Plates (embedded): ASTM A 240.

C. Concrete insert: Ductile embed.
   1. Description: 1-piece, integrally hot forged sleeve for embedment in concrete. Provided with flange for nailing to forms and female threaded coupler at the exposed concrete face, and washer-faced hex headed foot to resist pullout from concrete at the embedded end.
   2. Manufacturers: One of the following or equal:
      a. Dayton Superior: F-54 Ductile Embed Insert.
   3. Materials:
      a. Galvanized steel:
         1) Hot-dip galvanized coating in accordance with ASTM A 123 or A 153 where indicated on the Drawings.
         2) Steel: ASTM A 29 hot rolled, Grade 1045.

D. Deformed bar anchors:
   1. Description: Steel rod with rebar-like deformations along its length and welding ferrule at one end for attachment to structural steel members (plates or shapes).
   2. Manufacturers: One of the following or equal:
      a. Nelson Stud Welding Company: D2L Deformed Bar Anchors (D2L-DBA).
      b. Stud Welding Products, Inc.: Deformed Anchor Studs.
   3. Materials:
      a. Galvanized steel:
         1) Hot dip galvanized coating in accordance with ASTM A 153 where indicated on the Drawings.
         2) Steel: ASTM A 496 wire deformed for concrete reinforcement.

E. Welded studs:
   1. Description: Anchor with forged head for embedment into concrete on one end, and welding ferrule for attachment to steel on the other. Welded to steel members or plates to provide anchorage for steel connections to concrete.
   2. Acceptance criteria:
      a. Welded studs in accordance with AWS D1.1, Type B.
   3. Manufacturers: One of the following or equal:
      a. Nelson Stud Welding Company: H4L Concrete Anchors or S3L Shear Connectors as indicated on the Drawings.
      b. Stud Welding Products: Headed Concrete Anchors (HCA) or Headed Shear Connectors (HSC) as indicated on the Drawings.
   4. Materials:
      a. Stainless steel: Type 316L.
      b. Stainless steel: Type 304L.

F. Steel plates or shapes for fabrications including assemblies with welded studs or deformed bar anchors:
   1. Stainless steel: Type 316L or Type 304L.
      a. Plates (embedded): ASTM A 240.
   2. Galvanized steel:
      a. Hot dip galvanized in accordance with ASTM A 123.
      b. Steel: ASTM A 36.

2.3 POST-INSTALLED ANCHORS AND FASTENERS – ADHESIVE

A. Epoxy bonding of reinforcing bars, all thread rods, and threaded inserts in concrete: As specified in Section 03_21_18.

2.4 POST-INSTALLED ANCHORS AND FASTENERS – MECHANICAL

A. General:
   1. Post-installed anchors used for the Work shall hold a current ICC Evaluation Service Report demonstrating acceptance for use under the building code specified in Section 01_41_00.
      a. Conditions of use: The acceptance report shall indicate acceptance of the product for use under the following conditions:
         1) In regions of concrete where cracking has occurred or may occur.
         2) To resist short-term loads due to wind forces.
         3) To resist short-term loading due to seismic forces for the Seismic Design Category of the structure where the product will be used.
   2. Substitutions: When requesting product substitutions, submit calculations, indicating the diameter, effective embedment depth and spacing of the proposed anchors, and demonstrating that the substituted product will provide load resistance that is equal to or greater than that provided by the anchors listed in this Section.
      a. Calculations shall be prepared by and shall bear the signature and sealed of a Professional Engineer licensed in the State of Oklahoma.
      b. Decisions regarding the acceptability of proposed substitutions shall be at the discretion of the Engineer.

B. Concrete anchors:
   1. Description. Post-installed anchor assembly consisting of a threaded stud and a surrounding wedge expansion sleeve that is forced outward by torquing the center stud to transfer loads from the stud to the concrete through bearing, friction, or both. (Sometimes referred to as "expansion anchors" or "wedge anchors.")
      a. Do not use slug-in, lead cinch, and similar systems relying on deformation of lead alloy or similar materials to develop holding power.
   2. Concrete anchors for anchorage to concrete:
      a. Acceptance criteria. Concrete anchors shall have a current ICC-ES Report demonstrating that the anchors have been tested and qualified for performance in both cracked and un-cracked concrete, and for short term loading due to wind and seismic forces for Seismic Design Categories A through F in accordance with ACI 355.2 and with ICC-ES AC193 (including all mandatory tests and optional tests for seismic tension and shear in cracked concrete).
      b. Manufacturers: One of the following or equal:

1) Hilti: Kwik Bolt TZ Expansion Anchor.
2) Powers fasteners: PowerStud+ SD2.
3) Simpson Strong-Tie®: Strong Bolt 2 Wedge Anchor.

c. Materials. Integrally threaded stud, wedge, washer and nut:
1) Stainless steel: Type 316.
a) Type 304 stainless steel acceptable for use at wet and moist locations when accepted in writing by the Engineer.
2) Galvanized: Carbon steel, zinc plated in accordance with ASTM B 633, minimum 5 microns (Fe/Zn 5).

3. Concrete anchors for anchorage to concrete masonry (fully grouted cells):
a. Acceptance criteria: Concrete anchors shall have a current ICC-ES Report demonstrating that the anchors have been tested and qualified in accordance with ICC-ES AC01, including all mandatory tests and optional seismic tests.
b. Manufacturers: One of the following or equal:
1) Hilti: Kwik Bolt 3 Expansion Anchor.
2) Powers fasteners: Power-Stud+ SD1.
3) Simpson Strongtie: Wedge-All Anchor.
c. Materials. Integrally threaded stud, wedge, washer and nut:
1) Stainless steel: Type 316.
a) Type 304 stainless steel acceptable for use at wet and moist locations when accepted in writing by the Engineer.
2) Galvanized: Carbon steel, zinc plated in accordance with ASTM B 633, minimum 5 microns (Fe/Zn 5) or mechanically galvanized in accordance with ASTM B 695, Class 55, Type 1.

C. Flush shells:
1. Description: Post-installed anchor assembly consisting of an internally threaded mandrel that is forced into a pre-drilled concrete hole with a setting tool until the top of the anchor is flush with the face of the concrete. Once installed, a removable threaded bolt is installed in the mandrel.
2. Flush shell anchors are not permitted in the Work.

D. Sleeve anchors:
1. Description: Post-installed, torque-controlled anchor assembly consisting of an externally threaded stud with a spacer sleeve near the surface of the base material, and an expansion sleeve on the lower part of the stud. The expansion sleeve is forced outward by torquing of the center stud to transfer load.
a. Do not use slug-in, lead cinch, and similar systems relying on deformation of lead alloy or similar materials in order to develop holding power.
2. Sleeve anchors for anchorage to concrete.
a. Acceptance criteria. Sleeve anchors shall have a current ICC-ES Report demonstrating that the anchors have been tested and qualified for performance in both cracked and un-cracked concrete, and for short term loading due to wind and seismic forces for Seismic Design Categories A through F in accordance with ACI 355.2 and with ICC-ES AC193 (including all mandatory tests and optional tests for seismic tension and shear in cracked concrete).
b. Manufacturers: One of the following or equal:
1) Hilti: HSL-3 Heavy Duty Expansion (sleeve) Anchor.
2) Powers fasteners: Power Bolt+ Heavy Duty Sleeve Anchor.

c. Materials:
1) Galvanized steel: Carbon steel, zinc plated in accordance with ASTM B 633, minimum 5 microns (Fe/Zn 5).

3. Sleeve anchors for anchorage to concrete masonry (fully grouted only):
a. Acceptance criteria. Sleeve anchors shall have a current ICC-ES Report demonstrating that anchors have been tested and qualified for performance in masonry, including short term loading due to wind and seismic forces in accordance with ICC-ES AC01.
b. Materials:
1) Galvanized steel: Carbon steel, zinc plated in accordance with ASTM B 633, minimum 5 microns (Fe/Zn 5).

E. Screw anchors:
1. Description: Post-installed concrete anchor that develops tensile strength from mechanical interlock provided by creating a helical "key" that is larger than the diameter of the bolt itself along the length of the anchor shaft.
2. Screw anchors for anchorage to concrete:
a. Acceptance criteria: Screw anchors shall have a current ICC-ES Report demonstrating that the anchors have been tested and qualified for performance in both cracked and un-cracked concrete, and for short term loading due to wind and seismic forces for Seismic Design Categories A through F in accordance with ACI 355.2 and ICC ES AC193 (including all mandatory tests and optional tests for seismic tension and shear in cracked concrete).
b. Manufacturers: Screw anchor: One of the following or equal:
1) Hilti: Hex head: HUS-EZ Screw Anchor.
a) With internally threaded head: HUS-EZ I Hanger Anchor.
2) Powers fasteners: Wedge-Bolt+.
a) With internally threaded head: Vertigo+ Rod Hanging System
3) Simpson strong-tie: Titen HD Screw Anchor.
a) With internally threaded head: Titen HD Rod Hanger.
c. Materials:
1) Galvanized steel: Carbon steel, zinc plated in accordance with ASTM B 633, minimum 5 microns (Fe/Zn 5); or equal.
3. Screw anchors for anchorage to concrete masonry (fully grouted only):
a. Acceptance criteria:
1) Acceptance criteria. Screw anchors shall have a current ICC-ES Report demonstrating that anchors have been tested and qualified for performance in masonry, including short term loading due to wind and seismic forces in accordance with ICC-ES AC106.
b. Manufacturers: One of the following or equal:
1) Hilti: HUS-EZ Screw Anchor.
2) Simpson strong-tie: Titen HDScrew Anchor.
c. Materials:
1) Galvanized steel: Carbon steel. Zinc plated in accordance with ASTM B 633 , minimum 5 microns (Fe/Zn 5); or mechanically galvanized in accordance with ASTM B 695; Class 55, Type I.

F. Undercut concrete anchors:

1. Description: Post-installed concrete anchor that develops tensile strength from mechanical interlock provided by creation of an undercut "key" at the embedded end of the anchor. The undercut may be achieved with a special drill before anchor installation, or by the anchor itself during installation.
2. Acceptance criteria:
   a. Acceptance criteria: Undercut concrete anchors shall have a current ICC-ES Report demonstrating that the anchors have been tested and qualified for performance in both cracked and un-cracked concrete, and for short term loading due to wind and seismic forces for Seismic Design Categories A through F in accordance with ACI 355.2 and ICC ES AC193 (including all mandatory tests and optional tests for seismic tension and shear in cracked concrete).
   b. Use pre-setting units. Through setting units are not allowed unless prior written acceptance for specific locations is obtained from the Engineer.
3. Manufacturers: One of the following or equal:
   a. Hilti: HDA (carbon steel) or HAD-R (stainless steel) Undercut Anchor.
   b. Powers fasteners: Atomic+ Undercut Anchor.
   c. Simpson strong-tie: Torq-Cut Anchor.
   d. USP Structural Connectors: DUC-L Undercut Anchors.
4. Materials:
   a. Stainless steel: Corrosive, and wet and moist and locations: Type 316.

2.5 APPURTENANCES FOR ANCHORING AND FASTENING

A. Anchor bolt sleeves
   1. Having inside diameter approximately 2 inches greater than bolt diameter and minimum 10-bolt diameters long.
   2. Plastic sleeves:
      a. High-density polyethylene, corrugated sleeve, threaded to provide adjustment of location on the anchor bolt.
   3. Fabricated steel sleeves: Construct as specified in Section 05_50_00.
      a. At galvanized carbon steel anchor bolts, provide galvanized carbon steel sleeves.
      b. At stainless steel anchor bolts, provide stainless steel sleeves of same Type (304 or 316) as bolt, except that sleeves shall be constructed from low carbon stainless steel for welding (304L or 316L.
   4. Fabricated steel sleeves:
      a. Fabricate to the following dimensions unless otherwise indicated on the Drawings.
         1) Inside diameter: At least 2 inches greater than bolt diameter.
         2) Inside length: Not less than 10 bolt diameters.
         3) Bottom plate:
            a) Square plate with dimensions equal to the outside diameter of the sleeve plus 1/2 inch each side.
            b) Thickness equal to or greater than one-half of the anchor bolt diameter.
      b. Carbon steel anchor bolts:
         1) Fabricated from ASTM A 36 plate and ASTM A 53, Grade B pipe.
         2) Welded connections: Conform to requirements of AWS D1.1
         3) Hot dip galvanized in accordance with ASTM A 153.
      c. Stainless steel anchor bolts:

1) Fabricated from ASTM A 240 plate and pipe. Type 304L or Type 316L to match Type of the anchor bolt.
2) Welded connections: In accordance with AWS D1.6.

B. Forged steel hardware:
1. See Section 05_12_05 for forged steel hardware connectors, including: clevises, turnbuckles, eye bolts, eye nuts, and sleeve nuts.

C. Isolating sleeves and washers.
1. Manufacturers: One of the following or equal:
a. Central Plastics Company, Shawnee, Oklahoma.
b. Corrosion Control Products, PSI Inc., Gardena, CA.
2. Sleeves: Mylar, 1/32 inch thick, 4,000 volts per mil dielectric strength, of proper size to fit bolts and extending half way into both steel washers.
3. One sleeve required for each bolt.
4. Washers: The inside diameter of all washer shall fit over the isolating sleeve and both the steel and isolating washers shall have the same inside diameter and outside diameter.
a. Proper size to fit bolts. 2 insulating washers are required for each bolt.
b. Two 1/8-inch thick steel washers for each bolt.
c. G3 Phenolic:
1) Thickness: 1/8 inch.
2) Base material: Glass.
3) Resin: Phenolic.
4) Water absorption: 2 percent.
5) Hardness (Rockwell): 100.
6) Dielectric strength: 450 volts per mil.
7) Compression strength: 50,000 pounds per square inch.
8) Tensile strength: 20,000 pounds per square inch.
9) Maximum operating temperature: 350 degrees Fahrenheit.

D. Coating for repair of galvanized surfaces.
1. Manufacturers: One of the following or approved equal:
a. Galvinox.
b. Galvo-Weld.

E. Thread coating. For use with threaded stainless steel fasteners.
1. Manufacturers: One of the following or equal:
a. Never Seez Compound Corporation, Never-Seez.
b. Oil Research, Inc., WLR No. 111.

PART 3 EXECUTION

3.1 EXAMINATION

A. Examine Work in place to verify that it is satisfactory to receive the Work of this Section. If unsatisfactory conditions exist, do not begin this Work until such conditions have been corrected.

3.2 INSTALLATION: GENERAL

A. Where anchors and fasteners are not specifically indicated on the Drawings or specified, make attachments with materials specified in this Section.

B. Substitution of anchor types.
   1. Post-installed anchors may not be used as an alternative to cast-in / built-in anchors at locations where the latter are indicated on the Drawings.
   2. Cast-in/built-in anchors may be used as an alternative to post-installed mechanical anchors at locations where the latter are indicated on the Drawings.

C. Protect products from damage during installation. Take special care to protect threads and threaded ends.

D. Accurately locate and position anchors and fasteners.
   1. Unless otherwise indicated on the Drawings, install anchors perpendicular to the surfaces from which they project.
   2. Install anchors so that at least 2 threads, but not more than 1/2 inch of threaded rod, projects past the top nut.

E. Interface with other products:
   1. Where steel anchors come in contact with dissimilar metals (aluminum, stainless steel, etc.), bolt with stainless steel bolts and separate or isolate dissimilar metals using isolating sleeves and washers.
   2. Prior to installing nuts, coat threads of stainless steel fasteners with thread coating to prevent galling of threads.

3.3 INSTALLATION: CAST-IN ANCHORS

A. General:
   1. Accurately locate cast-in and built-in anchors.
      a. Provide anchor setting templates to locate anchor bolts and anchor rods. Secure templates to formwork.
      b. Brace or tie off embedments as necessary to prevent displacement during placement of plastic concrete or of surrounding masonry construction.
      c. Position and tie cast-in and built-in anchors in place before beginning placement of concrete or grout. Do not "stab" anchors into plastic concrete, mortar, or grout.
      d. Do not allow cast-in anchors to touch reinforcing steel. Where cast-in anchors are within 1/4 inch of reinforcing steel, isolate the metals by wrapping the anchors with a minimum of 4 wraps of 10-mil polyvinyl chloride tape in area adjacent to reinforcing steel.
   2. For anchoring at machinery bases subject to vibration, use 2 nuts, with 1 serving as a locknut.
   3. Where anchor bolts or anchor rods are indicated on the Drawings as being for future use, thoroughly coat exposed surfaces that project from concrete or masonry with non-oxidizing wax. Turn nuts down full length of the threads, and neatly wrap the exposed thread and nut with a minimum of 4 wraps of 10-mil waterproof polyvinyl tape.

B. Anchor bolts:
   1. Minimum effective embedment: 10-bolt diameters, unless a longer embedment is indicated on the Drawings.
   2. Where indicated on the Drawings, set anchor bolts in plastic, galvanized steel or stainless steel sleeves to allow for adjustment. Seal top of sleeve to prevent grout from filling sleeve.

C. Anchor rods.
   1. Install as specified for anchor bolts.

D. Concrete inserts.
   1. Provide inserts with minimum clear concrete cover not less than that specified for reinforcing bars.

E. Deformed bar anchors.
   1. Butt weld to steel fabrications with automatic stud welding gun as recommended by manufacturer.
   2. Ensure that butt weld develops the full strength of the anchor.

F. Welded studs:
   1. Butt weld to steel fabrications with automatic stud welding gun as recommended by the manufacturer.
   2. Ensure that butt weld develops full strength of the stud.

3.4 INSTALLATION: POST-INSTALLED ADHESIVE ANCHORS.

A. Epoxy and acrylic adhesive bonding of reinforcing bars, all thread rods, and internally threaded inserts in concrete: As specified in Section 03_21_17.

B. Epoxy and acrylic adhesive bonding of reinforcing bars, all thread rods, and internally threaded inserts in masonry: As specified in Section 04_05_18.

3.5 INSTALLATION: POST-INSTALLED MECHANICAL ANCHORS.

A. General:
   1. Install anchors in accordance with the manufacturer's instructions, ACI 355.2, the anchor's ICC-ES Report. Where conflict exists between the ICC-ES Report and the requirements in this Section, the requirements of the ICC-ES Report shall control.
   2. Where anchor manufacturer recommends the use of special tools and/or specific drill bits for installation, provide and use such tools.
   3. After anchors have been positioned and inserted into concrete or masonry, do not:
      a. Remove and reuse/reinstall anchors.
      b. Loosen or remove bolts or studs.

B. Holes drilled into concrete and masonry:
   1. Do not drill holes in concrete or masonry until the material has achieved its minimum specified compression strength (f'c or f'm).
   2. Accurately locate holes.

a. Before drilling holes, use a reinforcing bar locator to identify the position of all reinforcing steel, conduit, and other embedded items within a 6-inch radius of each proposed hole.
b. If the hole depth exceeds the range of detection for the rebar locator, the Engineer may require radiographs of the area designated for investigation before drilling commences.

3. Exercise care to avoid damaging existing reinforcement and other items embedded in concrete and masonry.
   a. If embedments are encountered during drilling, immediately stop work and notify the Engineer. Await Engineer's instructions before proceeding.
4. Unless otherwise indicated on the Drawings, drill holes perpendicular to the concrete surface into which they are placed.
5. Drill using anchor manufacturer's recommended equipment and procedures.
   a. Unless otherwise recommended by the manufacturer, drill in accordance with the following:
      1) Drilling equipment: Electric or pneumatic rotary type with light or medium impact. Where edge distances are less than 2 inches, use lighter impact equipment to prevent micro-cracking and concrete spalling during drilling process.
      2) Drill bits: Carbide-tipped in accordance with ANSI B212-15. Hollow drills with flushing air systems are preferred.
6. Drill holes at manufacture's recommended diameter and to depth required to provide the effective embedment indicated.
7. Clean and prepare holes as recommended by the manufacturer and as required by the ICC-ES Report for that anchor.
   a. Unless otherwise recommended by anchor manufacturer, remove dust and debris using brushes and clean compressed air.
   b. Repeat cleaning process as required by the manufacturer's installation instructions.
   c. When cleaning holes for stainless steel anchors, use only stainless steel or non-metallic brushes.

C. Insert and tighten (or torque) anchors in full compliance with the manufacturer's installation instructions.
   1. Once anchor is tightened (torque), do not attempt to loosen or remove its bolt or stud.

D. Concrete anchors: Minimum effective embedment lengths unless otherwise indicated on the Drawings:

Concrete Anchors			
Nominal Diameter	Minimum Effective Embedment Length		Minimum Required Member Thickness
	In Concrete	In Grouted Masonry	
3/8 inch	2 1/2 inch	2 5/8 inch	8 inch
1/2 inch	3 1/2 inch	3 1/2 inch	8 inch
5/8 inch	4 1/2 inch	4 1/2 inch	10 inch
3/4 inch	5 inch	5 1/4 inch	12 inch

E. Flush shell anchors:
1. Flush shell anchors are not permitted in the Work.
2. If equipment manufacturer's installation instructions recommend the use of flush shell anchors, contact Engineer for instructions before proceeding.

F. Sleeve anchors:
1. Minimum effective embedment lengths unless otherwise indicated on the Drawings:

Sleeve Anchors			
Nominal Diameter	Minimum Effective Embedment Length		Minimum Member Thickness
	In Concrete	In Grouted Masonry	
M8 (1/2 inch)	70 mm (2 3/4 inch)	Not accepted	100 mm (8 inch)
M10 (5/8 inch)	76 mm (3 inch)	Not accepted	250 mm (10 inch)
M12 (3/4 inch)	80 mm (3 1/4 inch)	Not accepted	300 mm (12 inch)

2. Install with the sleeve fully engaged in the base material.

G. Screw anchors:
1. Minimum effective embedment lengths unless otherwise indicated on the Drawings:

Screw Anchors			
Nominal Diameter	Minimum Effective Embedment Length		Minimum Member Thickness
	In Concrete	In Grouted Masonry	
3/8 inch	2 1/2 inch	3 1/4 inch	8 inch
1/2 inch	3 1/4 inch	4 1/2 inch	8 inch
5/8 inch	4 inch	5 inch	10 inch
3/4 inch	5 1/2 inch	6 1/4 inch	12 inch

2. Install screw anchors using equipment and methods recommended by the manufacturer. Continue driving into hole until the washer head is flush against the item being fastened.

H. Undercut concrete anchors:

1. Minimum effective embedment lengths unless otherwise indicated on the Drawings:

Sleeve Anchors			
Nominal Diameter (bolt)	Minimum Effective Embedment Length		Minimum Member Thickness(1)
	In Concrete	In Grouted Masonry	
M10 (3/8 inch)	100 mm (4 inch)	Not accepted	200 mm (8 inch)
M12 (1/2 inch)	125 mm (5 inch)	Not accepted	350 mm (14 inch)
M16 (5/8 inch)	190 mm (7 1/2 inch)	Not accepted	460 mm (18 inch)
M20 (7/8 inch)	250 mm (10 inch)	Not accepted	510 mm (20 inch)

Notes:
(1) Thickness indicated is for pre-set units. If through-set units are accepted, obtain minimum member thickness requirements from the Engineer.

2. Installations of undercut anchors shall not be allowed where edge distances are less than 12 times the nominal diameter of the anchor stud.
3. Undercut bottom of hole using cutting tools manufactured for this purpose by the manufacturer of the undercut anchors being placed.

3.6 FIELD QUALITY CONTROL

A. Post-installed anchors:

1. Review anchor manufacturer's installation instructions and requirements of the Evaluation Service Report (hereafter referred to as "installation documents") for each anchor type and material.
2. Observe hole-drilling and cleaning operations for conformance with the installation documents.
3. Certify in writing to the Engineer that the depth and location of anchor holes, and the torque applied for setting the anchors conforms to the requirements of the installation documents.

3.7 NON-CONFORMING WORK.

A. Remove miss-aligned or non-performing anchors.

B. Fill empty anchor holes and repair failed anchor locations as specified using high- strength, non-shrink, non-metallic grout.

C. If more than 10 percent of all tested anchors of a given diameter and type fail to achieve their specified torque or proof load, the Engineer will provide directions for required modifications. Make such modifications, up to and including replacement of all anchors, at no additional cost to the Owner.

END OF SECTION

SECTION 05_50_00.01

MISCELLANEOUS METAL FABRICATIONS

PART 1 GENERAL

1.1 SUMMARY

A. Miscellaneous metal fabrications as required by this section of the Contract Documents, unless otherwise indicated specifically on individual plans and appropriate sections of Contract Documents.

B. This section specifies metal elements including but not limited to the following. All items listed are not necessarily included in the project, see Project Drawings for specific project requirements.
   1. Shelf angles.
   2. Steel framing and supports for equipment and where framing and supports are not specified in other Sections.
   3. Pipe bollards.
   4. Prefabricated access hatches.
   5. Miscellaneous aluminum construction.

C. Any Drawing or Specification that conflicts with this Specification Section shall be brought to the attention of the Engineer prior to bid. When no clarification is provided the Contractor is to assume that more expensive product/system/item applies and shall be included in the Contractor's bid.

D. If design and installation details are not adequately shown on the Drawings, specified herein or recommended by the Manufacturer, the Contractor shall employ the services of an Oklahoma Registered Structural Engineer (SE) and provide stamped design and details along with a submittal cover letter stating submittal complies with all references and standards cited herein.

E. All listed iron and steel products used in this project must be produced in the United States. The term "iron and steel products" means the following products made primarily of iron or steel: lined or unlined pipes and fittings, manhole covers and other municipal castings, hydrants, tanks, flanges, pipe clamps and restraints, valves, structural steel, reinforced precast concrete, and construction materials. The deminimis and minor components waiver apply to this contract for minor components.

1.2 RELATED SECTIONS

A. Section 01_00_01 Basic Requirements

B. Section 01_33_01 General Submittal Requirements

C. Division 3 - Concrete

D. Division 5 - Metals

E. The Contract Documents are a complete unit and complementary to each other. The individual Specification sections and other Contract Documents do not contain all cross references to "related work" or "related sections." It is the Contractor's responsibility to review the complete Contract Documents in order to properly scope, schedule and coordinate the work of any/all subcontractors, suppliers, and others on this project. Anything called out in one location of the Contract Documents is binding as if it were called out in all sections of the Contract Documents.

1.3 SUBMITTALS

A. Submittals for products and miscellaneous items in this specification section shall be submitted in accordance with Section 01_33_01 General Submittal Requirements and related submittal sections and provisions of the Contract Documents.

B. Shop Drawings
1. Submit shop drawings as required by the Contract Documents.
2. Submit detailed shop drawings showing sizes of members, method of assembly, anchorage, and connection to other members for approval prior to fabrication.

C. Submit Manufacturer's product data including span and deflection tables and details of construction.

D. Submit Manufacturer's installation instructions.

E. Submit samples if requested by the Engineer.

1.4 REFERENCES

A. The Contractor and/or Manufacturer shall follow the standards listed below, except as otherwise specified herein. The latest revision or edition in effect at the time of bid opening shall be utilized.

B. International Code Council
1. International Building Code (IBC)

C. American Society of Civil Engineers (ASCE)
1. ASCE-7: Minimum Design Loads for Buildings and Other Structures

D. The Aluminum Association
1. Aluminum Design Manual.

E. American Institute of Steel Construction (AISC).
1. Steel Construction Manual.
2. Design Guide 27 – Structural Stainless Steel.

F. American Welding Society (AWS):
1. D1.1 Structural Welding Code - Steel.
2. D1.2 Structural Welding Code – Aluminum
3. D1.3 Structural Welding Code – Sheet Steel
4. D1.6 Structural Welding Code – Stainless Steel

G. American Society for Testing and Materials (ASTM):
1. ASTM A36 - Standard Specification for Carbon Structural Steel.
2. ASTM A48 - Standard Specification for Gray Iron Castings.
3. ASTM A53 - Standard Specification for Pipe, Steel, Black and Hot-Dipped, Zinc-Coated, Welded and Seamless.
4. ASTM A108 - Standard Specification for Steel Bar, Carbon and Alloy, Cold-Finished.
5. ASTM A123 - Standard Specification for Zinc (Hot-Dip Galvanized) Coatings on Iron and Steel Products.
6. ASTM A153 - Standard Specification for Zinc Coating (Hot-Dip) on Iron and Steel Hardware.
7. ASTM A193 - Standard Specification for Alloy-Steel and Stainless Steel Bolting for High Temperature or High Pressure Service and Other Special Purpose Applications.
8. ASTM A240 – Standard Specification for Chromium and Chromium-Nickel Stainless Steel Plate, Sheet and Strip for Pressure Vessels and General Applications.
9. ASTM A276 - Standard Specification for Stainless Steel Bars and Shapes.
10. ASTM A307 - Standard Specification for Carbon Steel Bolts, Studs, and Threaded Rod 60,000 PSI Tensile Strength.
11. ASTM A325 - Standard Specification for Structural Bolts, Steel, Heat Treated, 120/105 ksi Minimum Tensile Strength.
12. ASTM A490 - Standard Specification for Structural Bolts, Alloy Steel, Heat Treated, 150 ksi Minimum Tensile Strength.
13. ASTM A500 - Standard Specification for Cold-Formed Welded and Seamless Carbon Steel Structural Tubing in Rounds and Shapes.
14. ASTM A572 - Standard Specification for High-Strength Low-Alloy Columbium-Vanadium Structural Steel.
15. ASTM A653 - Standard Specification for Steel Sheet, Zinc-Coated (Galvanized) or Zinc-Iron Alloy-Coated (Galvannealed) by the Hot-Dip Process
16. ASTM A780 - Standard Practice for Repair of Damaged and Uncoated Areas of Hot-Dip Galvanized Coatings.
17. ASTM A992 - Standard Specification for Structural Steel Shapes.
18. ASTM A1008 - Standard Specification for Steel, Sheet, Cold-Rolled, Carbon, Structural, High-Strength Low-Alloy, High-Strength Low-Alloy with Improved Formability, Solution Hardened, and Bake Hardenable.
19. ASTM A1011 - Standard Specification for Steel, Sheet and Strip, Hot-Rolled, Carbon, Structural, High-Strength Low-Alloy, High-Strength Low-Alloy with Improved Formability, and Ultra-High Strength.
20. ASTM B26, Specification for Aluminum-Alloy Sand Castings.
21. ASTM B136, Standard Method for Measurement of Stain Resistance of Anodic Coatings on Aluminum.
22. ASTM B137, Standard Test Method for Measurement of Coating Mass Per Unit Area on Anodically Coated Aluminum.
23. ASTM B209 - Standard Specification for Aluminum and Aluminum-Alloy Sheet and Plate.
24. ASTM B210, Standard Specification for Aluminum and Aluminum-Alloy Drawn Seamless Tubes.
25. ASTM B221 - Standard Specification for Aluminum and Aluminum-Alloy Extruded Bars, Rods, Wire, Profiles, and Tubes.
26. ASTM B241, Standard Specification for Aluminum and Aluminum-Alloy Seamless Pipe and Seamless Extruded Tube.

27. ASTM B244, Standard Test Method for Measurement of Thickness of Anodic Coatings on Aluminum and of Other Nonconductive Coatings on Nonmagnetic Basis Metals with Eddy-Current Instruments.
28. ASTM B247, Standard Specification for Aluminum and Aluminum-Alloy Die Forgings, Hand Forgings, and Rolled Ring Forgings.
29. ASTM B429, Standard Specification for Aluminum-Alloy Extruded Structural Pipe and Tube.
30. ASTM F593 - Standard Specification for Stainless Steel Bolts, Hex Cap Screws, and Studs.

H. The American Society of Safety Engineers (ASSE)
1. ASSE A1264.1, Safety Requirements for Workplace Walking/Working Surfaces & Their Access; Workplace Floor, Wall & Roof Openings; Stairs & Guardrails Systems

I. The Society for Protective Coatings (SSPC):
1. SSPC Painting Manual, Volumes 1 & 2.

J. United States Department of Labor:
1. OHSA Regulations (Standards - 29 CFR); Part 1926 - Safety and Health Regulations for Construction.

PART 2 PRODUCTS

2.1 GENERAL

A. For metal fabrications exposed to view in the completed work, provide materials with smooth, flat surfaces without blemishes. Do not use materials with exposed pitting, seam marks, roller marks, rolled trade names, or roughness.

2.2 ALUMINUM

A. Materials
1. Aluminum structural shapes, bars and plates:
a. Alloy 6061-T6 or 6063-T5.
2. Extruded aluminum pipe:
a. Alloy 6063-T6 or 6061-T6.
3. Aluminum Castings:
a. Alloy 535.

B. Fabrication
1. Follow general fabrication requirements elsewhere in this Section.
2. Fabricate miscellaneous aluminum shapes and plates as shown. Furnish welded and mitered angle frames and other fabrications complete with welded anchors attached. Furnish all miscellaneous aluminum shown but not otherwise detailed. Structural shapes and extruded items shall comply with the dimensions on the Drawings within the tolerances published by the Aluminum Association.
3. Weld aluminum work on the unexposed side when possible in order to prevent pitting or discoloration of exposed aluminum surfaces.

C. Finishes

1. All exposed aluminum surfaces shall have anodized finish unless otherwise specified. Apply a coat of methacrylate lacquer to all aluminum before shipment.

2.3 FERROUS METALS

A. Structural Steel:
   1. All rolled structural shapes, plates and bars must meet the standards for ASTM A992 and ASTM A572, Grade 50 unless otherwise shown in the Drawings.
   2. Clip angles, stiffeners, plates and other detail items must conform to standards of the main member to which the items are attached unless noted otherwise.

B. Steel Pipe
   1. Conform to ASTM A53, Type E or S, Grade B, welded or seamless. No hydrostatic tests required.

C. Structural Steel Tubing:
   1. Conform to ASTM A500, Grade B, with minimum yield strength of 46,000 psi. No hydrostatic tests required.

D. Stainless Steel:
   1. Use the stainless steel grade indicated on the drawings (304 or 316). Where the grade is not specified use AISI 316. Use a weldable (304L or 316L) grade of stainless steel for welded items.
   2. For all stainless steel, required minimum yield strength is as follows unless otherwise noted on the Drawings.
      a. 304 or 316: 30,000 psi.
      b. 304L or 316L: 25,000 psi.

E. Slotted Channel Framing:
   1. Galvanized steel cold-formed metal channels with flange edges returned toward web and with 9/16-inch wide slotted holes in webs at 2 inches on center.
   2. Fabricate from steel conforming to ASTM A1101, GR 33.
   3. Channel width:
      a. As indicated on the Drawings.
   4. Channel depth:
      a. As indicated on the Drawings.

F. Gray-Iron Castings:
   1. Gray iron castings conforming to ASTM A48, Class 30 unless another class is indicated or required by structural loads.

2.4 FASTENERS:

A. Provide ASTM F593, Type 316 fasteners for exterior use or when called for in the Drawings.

B. Structural Steel Bolts, Nuts & Washers
   1. Bolts & Nuts:
      a. Use high-strength bolts, conforming to ASTM A325 with hex nuts.
   2. Washers
      a. Plain washers, use round, carbon steel, ASME B18.22.1.
      b. Lock washers, use helical, spring type, carbon steel, ASME B18.22.1.

C. Prefabricated access hatches
1. General Requirements:
a. Provide prefabricated access hatches of the sizes and types shown on the Drawings.
b. Door leaf(s) shall be aluminum diamond plate as shown on Drawings.
c. Unless otherwise noted on the Drawings, use pivot torsion bars for counterbalance or spring operators for easy operation. Doors shall open to 90 degrees with automatic door hold open and shall be provided with a grip handle to release the cover for closing.
d. Hardware shall be durable and corrosion resistant with Type 316 stainless steel hardware used throughout. Provide removable lock handle.
e. Provide factory mill finish and bituminous coating to the exterior of the frames. Where specified to be watertight, a 1-1/2-inch drainage coupling shall be provided in the perimeter channel frame.
f. Break bond between dissimilar metals using a heavy coat of alkali resistant bituminous paint, or other coating recommended by the Manufacturer that will provide equivalent protection. Otherwise, hatches used at exposed exterior locations shall be weather stripped or sealed to resist penetration of water. Embedded frame with embedment anchors shall be supplied by the hatch Manufacturer.
g. Manufacturers shall provide access hatch with aluminum safety grating panel installed beneath access covers to provide additional protection against fall through accidents when the cover is left in the open position. The aluminum grating panel shall be designed, anchored, etc., by the hatch Manufacturer.
2. Load Requirements:
a. Hatches shall be designed to withstand an unfactored concentrated wheel loading (live load) of 16,000 lbs with an impact factor of 1.33 over a 20 inch by 10 inch tire contact area or an unfactored live load of 250 pounds per square foot, whichever produces the greatest stresses.
3. Acceptable Manufacturers: Subject to compliance with requirements, provide prefabricated roof hatch units by one of the following:
1) Halliday Products, Inc., Orlando, FL.

2.5 SHELF ANGLES

A. Fabricate shelf angles from steel angles of sizes indicated and for attachment to concrete framing. Provide horizontally slotted holes to receive 3/4-inch bolts, spaced not more than 6 inches from ends and 24 inches o.c., unless otherwise indicated in the Drawings.

B. For cavity walls, provide vertical channel brackets to support angles from backup masonry and concrete. Align expansion joints in angles with indicated control and expansion joints in cavity-wall exterior wythe.

C. Galvanized shelf angles to be installed in exterior walls.

D. Furnish wedge-type concrete inserts, complete with fasteners, to attach shelf angles to cast-in-place concrete unless otherwise indicated in the Drawings.

2.6 PIPE BOLLARDS

A. Fabricate pipe bollards from Schedule 80 steel pipe. Cap bollards consistent with details in the Drawings.

B. Where indicated, fabricate bollards with steel baseplates for bolting to concrete slab. Drill baseplates at all four corners for anchor bolts. Base plate and anchor bolts size shall be as shown on Drawings. Where bollards are to be anchored to sloping concrete slabs, angle base plates for plumb alignment of bollards.

C. PREFABRICATED ACCESS HATCHES

D. Hatches:
1. General Requirements:
a. Provide prefabricated access hatches of the sizes and types shown on the Drawings.
b. Door leaf(s) shall be aluminum diamond plate as shown on Drawings.
c. Unless otherwise noted on the Drawings, use pivot torsion bars for counterbalance or spring operators for easy operation. Doors shall open to 90 degrees with automatic door hold open and shall be provided with a grip handle to release the cover for closing.
d. Hardware shall be durable and corrosion resistant with Type 316 stainless steel hardware used throughout. Provide removable lock handle.
e. Provide factory mill finish and bituminous coating to the exterior of the frames. Where specified to be watertight, a 1-1/2-inch drainage coupling shall be provided in the perimeter channel frame.
f. Break bond between dissimilar metals using a heavy coat of alkali resistant bituminous paint, or other coating recommended by the Manufacturer that will provide equivalent protection. Otherwise, hatches used at exposed exterior locations shall be weather stripped or sealed to resist penetration of water. Embedded frame with embedment anchors shall be supplied by the hatch Manufacturer.
g. Manufacturers shall provide access hatch with aluminum safety grating panel installed beneath access covers to provide additional protection against fall through accidents when the cover is left in the open position. The aluminum grating panel shall be designed, anchored, etc., by the hatch Manufacturer.
2. Load Requirements:
a. Hatches shall be designed to withstand an unfactored concentrated wheel loading (live load) of 16,000 lbs with an impact factor of 1.33 over a 20 inch by 10 inch tire contact area or an unfactored live load of 250 pounds per square foot, whichever produces the greatest stresses.
3. Acceptable Manufacturers: Subject to compliance with requirements, provide prefabricated roof hatch units by one of the following:
1) Halliday Products, Inc., Orlando, FL.

2.7 GALVANIZING

A. Hot-dipped zinc coat structural items specifically designated as galvanized after fabrication. Conform to the applicable standard, ASTM A123 or ASTM A153.

B. Use repair coating which conforms to ASTM A780. Acceptable products include:
   1. Carboline Carbo Zinc No. 11.
   2. Galv-Weld Products Galv-Weld Alloy.
   3. Koppers Organic Zinc coating.

C. Unless otherwise noted all structural steel shall be galvanized.

2.8 FABRICATION

A. Begin fabrication of structural steel only after shop drawings have been reviewed with no exceptions taken. Fabricate according to AISC and ASTM reference standards, codes, and these specifications unless directed or shown otherwise.

B. Fabricate structural members completely in the shop. Assemble structural assemblies in the shop to the greatest extent possible.

C. Drill, punch, cut and tap steel as required for anchorage, connection, or accommodating other work as shown, specified, or otherwise directed. Items with burned holes are considered defective and must be removed and replaced.

2.9 WELDING

A. Perform welding in accord with the AWS reference standard. Use procedures such as preheat or interpass temperature as recommended by AWS standards.

B. All shop and field welding must be performed by qualified welders who hold current welding certificates.

C. Surfaces to be welded must be free of loose scale, slag, rust, grease, paint and other foreign material. Mill scale which withstands vigorous wire brushing may remain.

D. Joint surfaces must be free of fins and tears caused by shearing. Wherever practicable, prepare edges by gas cutting using a mechanically guided torch.

E. Electrodes:
   1. For structural steel, use AWS Low Hydrogen, Electrode E70XX Series suitable for the welding process used.
   2. For stainless steel, use 70 ksi minimum tensile strength filler material suitable for base metals and welding process in accordance with AWS specifications.
   3. For aluminum, use filler alloy 5356 in accordance with AWS specifications.

F. Protect electrodes from exposure to moisture and coating.

G. If shop welding is done by automatic, submerged arc process, verify that physical properties of deposited weld metal will be similar to properties of the base metal.

H. No welding shall be done when the temperature of the base metal is below 32°F.

I. The cover bead or finish pass must have a smooth, uniform surface with reinforcement of 1/16 to 1/8 inch. Surface voids, cracks in finish weldments, or undercutting of base metal at the fusion line is not acceptable.

2.10 SURFACE PREPARATION AND PAINTING

A. All surfaces shall be prepared and finished in accordance with Division 9 requirements unless otherwise noted in the Drawings. Structural steel shall be shop primed. Stainless steel shall not be coated unless otherwise specified in the Drawings or elsewhere in the Specifications.

B. Galvanize structural steel items specifically shown or specified as galvanized in the Drawings. Members that are warped during the galvanizing process will be rejected.

2.11 INSPECTION AND TESTING

A. Mill or shop inspection and non-destructive testing (in addition to field inspection and non-destructive testing) may be done by the Owner.

B. Inspection in mill, shop, or field in no way relieves the Contractor from his responsibility to furnish satisfactory materials. Right is reserved to reject material at any time before final acceptance if material and workmanship do not conform to drawings and specifications.

PART 3 EXECUTION

3.1 ERECTION

A. Erect the structure according to AISC specifications and codes and reviewed shop drawings.

B. Give careful attention to leveling and plumbing of structural steel at all stages of construction.

C. Provide temporary shoring and bracing of sufficient strength to support imposed loads. Remove temporary shoring and bracing when permanent members are fully in place and all final connections have been made.

D. Furnish templates for setting anchor bolts in concrete.

E. Support column base plates on steel wedges with no portion of a wedge within one inch of base plate edge. Apply grout at base plates according to Manufacturer's recommendations.

F. Drift pins may be used only to bring parts together if used carefully so as not to distort or damage metal.

G. Connections shall be welded or bolted as shown. Weld as previously specified in this section. Install high strength bolts according to the RCRBSJ reference standard. Tighten by turn-of-the-nut method.

3.2 FIELD MODIFICATION

A. Field modification of structural steel members or assemblies is not permitted. Fabrication errors shall be corrected in the shop unless written approval is obtained in advance from the Engineer.

B. The use of a gas cutting torch for correcting fabrication errors or fit up issues is not permitted.

C. Where field holes are called for in the Drawings or reviewed shop drawings, create holes by drilling only.

3.3 INSTALLING MISCELLANEOUS FRAMING AND SUPPORTS

A. Install framing and supports to comply with requirements of items being supported, including Manufacturers' written instructions and requirements indicated on Shop Drawings, if any.

3.4 INSTALLING PIPE BOLLARDS

A. Anchor bollards in place with concrete footings as shown in the Drawings. Support and brace bollards in position in footing excavations until concrete has been placed and cured.

3.5 ADJUSTING AND CLEANING

A. Touchup Painting:
   1. Immediately after erection, clean field welds, bolted connections, and abraded areas of shop paint, and paint exposed areas with the same material as used for shop painting to comply with SSPC-PA1 for touching up shop-painted surfaces. Apply by brush or spray to provide a minimum 2.0-mil dry film thickness.
   2. Cleaning and touchup painting of field welds, bolted connections, and abraded areas of shop paint are specified in Section 09_91_00.13.

B. Repair of Galvanized Surfaces:
   1. Thoroughly clean field welds, bolted connections, abrasions, abraded areas and galvanized surfaces damaged from welding, handling, or installation shall be repaired immediately after installation with galvanizing repair material. Apply matching galvanized repair coat as specified in this Section. Galvanizing repair shall be performed and completed before concrete is placed. Any member requiring repair of more than 2 percent of the surface area shall be rejected.

END OF SECTION

SECTION 05_51_00.13

METAL LADDERS PLATFORMS & STAIRS

PART 1 GENERAL

1.1 SUMMARY

A. Metal ladders, platforms & stairs as required by this section of the Contract Documents, unless otherwise indicated specifically on individual plans and appropriate sections of Contract Documents.

B. All listed iron and steel products used in this project must be produced in the United States. The term "iron and steel products" means the following products made primarily of iron or steel: lined or unlined pipes and fittings, manhole covers and other municipal castings, hydrants, tanks, flanges, pipe clamps and restraints, valves, structural steel, reinforced precast concrete, and construction materials. The deminimis and minor components waiver apply to this contract for minor components.

C. Shop Drawings
1. Submit detailed shop drawings showing sizes of members, method of assembly, anchorage, and connection to other members for approval prior to fabrication.

D. Information shown on the Drawings is for reference only as to location. It is the intent that the any system / component be provided in a single system from a single manufacturer and designed and detailed under the supervision of an Oklahoma Registered Structural Engineer (SE.)

E. Provide a letter sealed by a Licensed Professional Structural Engineer (SE) in the State which the project will be built stating that the proposed items have been designed and detailed under their supervision and meet all codes referenced by this Section and requirements of this Section.

1.2 RELATED SECTIONS

A. Section 01_00_01 Basic Requirements

B. Section 01_33_01 General Submittal Requirements

C. Division 3 – Concrete

D. Division 5 – Metals

E. The Contract Documents are a complete unit and complementary to each other. The individual Specification sections and other Contract Documents do not contain all cross references to "related work" or "related sections." It is the Contractor's responsibility to review the complete Contract Documents in order to properly scope, schedule and coordinate the work of any/all subcontractors, suppliers, and others on this project. Anything called out in one location of the Contract Documents is binding as if it were called out in all sections of the Contract Documents.

1.3 SUBMITTALS

A. Submittals for products and miscellaneous items in this specification section shall be submitted in accordance with Section 01_33_01 General Submittal Requirements and related submittal sections and provisions of the Contract Documents.

B. Shop Drawings
1. Submit shop drawings as specified in Division 1, General Provisions and required by the Contract Documents.
2. Submit detailed shop drawings showing sizes of members, method of assembly, anchorage, and connection to other members for approval prior to fabrication.

C. Provide a letter sealed by a Licensed Professional Structural Engineer in the State which the project will be built stating that the proposed items have been designed and detailed under their supervision and meet all codes referenced by this Section and requirements of this Section.

D. Submit Manufacturer's product data including span and deflection tables and details of construction.

E. Submit Manufacturer's installation instructions.

F. Submit samples if requested by the Engineer.

1.4 REFERENCES

A. The Contractor and/or Manufacturer shall follow the standards listed below, except as otherwise specified herein. The latest revision or edition in effect at the time of bid opening shall be utilized.

B. International Code Council
1. International Building Code (IBC)

C. American Society of Civil Engineers (ASCE)
1. ASCE-7: Minimum Design Loads for Buildings and Other Structures

D. The Aluminum Association
1. Aluminum Design Manual.

E. American Institute of Steel Construction (AISC).
1. Steel Construction Manual.
2. Design Guide 27 – Structural Stainless Steel.

F. American Welding Society (AWS):
1. D1.1 Structural Welding Code - Steel.
2. D1.2 Structural Welding Code – Aluminum
3. D1.3 Structural Welding Code – Sheet Steel
4. D1.6 Structural Welding Code – Stainless Steel

G. American Society for Testing and Materials (ASTM):
1. ASTM A36 - Standard Specification for Carbon Structural Steel.

2. ASTM A48 - Standard Specification for Gray Iron Castings.
3. ASTM A53 - Standard Specification for Pipe, Steel, Black and Hot-Dipped, Zinc-Coated, Welded and Seamless.
4. ASTM A108 - Standard Specification for Steel Bar, Carbon and Alloy, Cold-Finished.
5. ASTM A123 - Standard Specification for Zinc (Hot-Dip Galvanized) Coatings on Iron and Steel Products.
6. ASTM A153 - Standard Specification for Zinc Coating (Hot-Dip) on Iron and Steel Hardware.
7. ASTM A193 - Standard Specification for Alloy-Steel and Stainless Steel Bolting for High Temperature or High Pressure Service and Other Special Purpose Applications.
8. ASTM A240 – Standard Specification for Chromium and Chromium-Nickel Stainless Steel Plate, Sheet and Strip for Pressure Vessels and General Applications.
9. ASTM A276 - Standard Specification for Stainless Steel Bars and Shapes.
10. ASTM A307 - Standard Specification for Carbon Steel Bolts, Studs, and Threaded Rod 60,000 PSI Tensile Strength.
11. ASTM A325 - Standard Specification for Structural Bolts, Steel, Heat Treated, 120/105 ksi Minimum Tensile Strength.
12. ASTM A490 - Standard Specification for Structural Bolts, Alloy Steel, Heat Treated, 150 ksi Minimum Tensile Strength.
13. ASTM A500 - Standard Specification for Cold-Formed Welded and Seamless Carbon Steel Structural Tubing in Rounds and Shapes.
14. ASTM A572 - Standard Specification for High-Strength Low-Alloy Columbium-Vanadium Structural Steel.
15. ASTM A653 - Standard Specification for Steel Sheet, Zinc-Coated (Galvanized) or Zinc-Iron Alloy-Coated (Galvannealed) by the Hot-Dip Process
16. ASTM A780 - Standard Practice for Repair of Damaged and Uncoated Areas of Hot-Dip Galvanized Coatings.
17. ASTM A992 - Standard Specification for Structural Steel Shapes.
18. ASTM A1008 - Standard Specification for Steel, Sheet, Cold-Rolled, Carbon, Structural, High-Strength Low-Alloy, High-Strength Low-Alloy with Improved Formability, Solution Hardened, and Bake Hardenable.
19.
20. ASTM A1011 - Standard Specification for Steel, Sheet and Strip, Hot-Rolled, Carbon, Structural, High-Strength Low-Alloy, High-Strength Low-Alloy with Improved Formability, and Ultra-High Strength.
21. ASTM B26, Specification for Aluminum-Alloy Sand Castings.
22. ASTM B136, Standard Method for Measurement of Stain Resistance of Anodic Coatings on Aluminum.
23. ASTM B137, Standard Test Method for Measurement of Coating Mass Per Unit Area on Anodically Coated Aluminum.
24. ASTM B209 - Standard Specification for Aluminum and Aluminum-Alloy Sheet and Plate.
25. ASTM B210, Standard Specification for Aluminum and Aluminum-Alloy Drawn Seamless Tubes.
26. ASTM B221 - Standard Specification for Aluminum and Aluminum-Alloy Extruded Bars, Rods, Wire, Profiles, and Tubes.
27. ASTM B241, Standard Specification for Aluminum and Aluminum-Alloy Seamless Pipe and Seamless Extruded Tube.

28. ASTM B244, Standard Test Method for Measurement of Thickness of Anodic Coatings on Aluminum and of Other Nonconductive Coatings on Nonmagnetic Basis Metals with Eddy-Current Instruments.
29. ASTM B247, Standard Specification for Aluminum and Aluminum-Alloy Die Forgings, Hand Forgings, and Rolled Ring Forgings.
30. ASTM B429, Standard Specification for Aluminum-Alloy Extruded Structural Pipe and Tube.
31. ASTM F593 - Standard Specification for Stainless Steel Bolts, Hex Cap Screws, and Studs.

H. The American Society of Safety Engineers (ASSE)
1. ASSE A1264.1, Safety Requirements for Workplace Walking/Working Surfaces & Their Access; Workplace Floor, Wall & Roof Openings; Stairs & Guardrails Systems

I. American National Standards Institute (ANSI)
1. ANSI A14.3, American National Standard for Ladders - Fixed - Safety Requirements.

J. The Society for Protective Coatings (SSPC):
1. SSPC Painting Manual, Volumes 1 & 2.

K. United States Department of Labor:
1. OHSA Regulations (Standards - 29 CFR); Part 1926 - Safety and Health Regulations for Construction.

PART 2 PRODUCTS

2.1 GENERAL

A. For metal fabrications exposed to view in the completed Work, provide materials with smooth, flat surfaces without blemishes. Do not use materials with exposed pitting, seam marks, roller marks, rolled trade names, or roughness.

2.2 ALUMINUM

A. Materials
1. Aluminum structural shapes, bars and plates:
a. Alloy 6061-T6 or 6063-T5.
2. Extruded aluminum pipe:
a. Alloy 6063-T6 or 6061-T6.
3. Aluminum Castings:
a. Alloy 535.

B. Fabrication
1. Follow general fabrication requirements elsewhere in this Section.
2. Fabricate aluminum shapes and plates as shown. Furnish welded and mitered angle frames and other fabrications complete with welded anchors attached. Furnish all miscellaneous aluminum shown but not otherwise detailed. Structural shapes and extruded items shall comply with the dimensions on the Drawings within the tolerances published by the Aluminum Association.

3. Weld aluminum work on the unexposed side when possible, in order to prevent pitting or discoloration of exposed aluminum surfaces.

C. Finishes
1. All exposed aluminum surfaces shall ave anodized finish unless otherwise specified. Apply a coat of methacrylate lacquer to all aluminum before shipment.

2.3 FERROUS METALS

A. Structural Steel:
1. All rolled structural shapes, plates and bars must meet the standards for ASTM A992 and ASTM A572, Grade 50 unless otherwise shown in the Drawings or called for in design.
2. Clip angles, stiffeners, plates and other detail items must conform to standards of the main member to which the items are attached unless noted otherwise.

B. Steel Pipe
1. Conform to ASTM A53, Type E or S, Grade B, welded or seamless. No hydrostatic tests required.

C. Structural Steel Tubing:
1. Conform to ASTM A500, Grade B, with minimum yield strength of 46,000 psi. No hydrostatic tests required.

D. Stainless Steel:
1. Use the stainless-steel grade indicated on the drawings (304 or 316). Where the grade is not specified use AISI 316. Use a weldable (304L or 316L) grade of stainless steel for welded items.
2. For all stainless steel, required minimum yield strength is as follows unless otherwise noted on the Drawings.
a. 304 or 316: 30,000 psi.
b. 304L or 316L: 25,000 psi.

2.4 FASTENERS:

A. Provide ASTM F593, Type 316 fasteners for exterior use or when called for in the Drawings.

B. Structural Steel Bolts, Nuts & Washers
1. Bolts & Nuts:
a. Use high-strength bolts, conforming to ASTM A325 with hex nuts.
2. Washers
a. Plain washers, use round, carbon steel, ASME B18.22.1.
b. Lock washers, use helical, spring type, carbon steel, ASME B18.22.1.

2.5 ALUMINUM LADDERS

A. Performance Criteria
1. Fixed ladders and side extensions shall meet the load requirements of ASCE-7, Section 4.5.4.
2. Fixed ladders and accessories shall be certified as meeting current requirements of reference standards IBC, ANSI, ASCE-7 and OSHA.

B. Materials:
1. Side Rails/Safety Cages, Rail Extension, and Platform:
a. Aluminum plates, alloy 6061-T6
b. Aluminum extrusions, alloy 6063-T5.
2. Rungs:
a. Knurled or serrated aluminum bars, 1.25-inch in square section, alloy 6061-T6.
b. Weld size and filler material shall meet required design strength.
3. Rail Extension:
a. Minimum 3'-6" above the landing and shall be fitted with deeply serrated, square, tubular grab rails.
4. Safety cage:
a. Provide safety cage on all ladders over 20 feet unless otherwise noted in the Drawings.
5. Landing Platform:
a. Provide at 30 foot intervals above the bottom of the ladder, complete with 1- 1/2 inch or greater diameter tubular aluminum guard rails and decks of serrated aluminum treads.
6. Wall/Floor Support Brackets:
a. Aluminum plates, alloy 6061-T6.
b. 316 SS fasteners/rigid attack/locking.

C. Acceptable Manufacturers:
1. O'Keefe's.
2. Alaco.

D. Ladder safety post extensions
1. Each fixed ladder occurring below a hatch door shall be provided with an attached telescoping safety post extension of aluminum construction. Unit shall be completely assembled with stainless steel fasteners and brackets for securing to the ladder rungs provided by the Manufacturer.
2. Acceptable Manufacturers: Bilco - Ladder Up Safety Post, Model 2; or equal.

2.6 STEEL LADDERS

A. Performance Criteria
1. Fixed ladders and side extensions shall meet the load requirements of ASCE-7, Section 4.5.4.
2. Fixed ladders and accessories shall be certified as meeting current requirements of reference standards IBC, ANSI, ASCE-7 and OSHA.

B. Materials:
1. General:
a. Provide stainless steel, coated steel or galvanized steel as called for in the Drawings.
2. Fasteners:
a. Provide fasteners of the same material type as the ladder elements.
b. Provide stainless steel anchor bolts unless otherwise specified in the Drawings.

C. Acceptable Manufacturers:

1. O'Keefe's.
2. Alaco.

D. Ladder safety post extensions
1. Each fixed ladder occurring below a hatch door shall be provided with an attached telescoping safety post extension of aluminum construction. Unit shall be completely assembled with stainless steel fasteners and brackets for securing to the ladder rungs provided by the Manufacturer.
2. Acceptable Manufacturers:
a. Bilco - Ladder Up Safety Post, Model 2; or equal.

2.7 SHIPS LADDERS

A. Performance Criteria
1. Ships ladders shall meet the load requirements of stairs per ASCE-7, Section 4.5.4 and Table 4-1
2. Ships ladders and accessories shall be certified as meeting current requirements of reference standards IBC, ANSI, ASCE-7 and OSHA.

B. Materials:
1. Aluminum:
a. Alloy 6061-T6 or 6063-T5.
2. Wall/Floor Support:
a. 316 SS fasteners/anchors.

C. Acceptable Manufacturers:
1. O'Keefe's.
2. Alaco.

2.8 STAIRS AND PLATFORMS

A. General
1. Provide stairs and platforms of the material designated where shown in the Drawings. If stair or platform details are not shown, provide a system meeting the criteria in this Section.

B. Performance Criteria
1. Fixed stairs and landing shall meet the load requirements of ASCE-7, Table 4-1.
2. Platforms shall be designed for the following loads, choose whichever gives the greatest stresses:
a. Uniform Live Load: 125 psf
b. Concentrated Live Load: 1,500 lbs.
c. Maximum Clear Span Deflection:
1) L/360 or 1/4 inch, whichever is less, under uniform loading of 100 psf.
3. Fixed stairs, landings, platforms and accessories shall be certified as meeting current requirements of reference standards IBC, ANSI, ASCE-7 and OSHA.

C. Geometric Requirements:

1. Meet all geometric requirements for stair tread sizes, rise/run, landing locations and sizes, clearances, etc. of the reference codes and standards listed in this section.

D. Materials:
   1. General:
      a. Provide the material as called for in the Drawings.
   2. Fasteners:
      a. Provide fasteners of the same material type as the stair or platform elements.
      b. Provide stainless steel anchor bolts unless otherwise specified in the Drawings.

E. Acceptable Manufacturers:
   1. O'Keefe's.
   2. Alaco.

2.9 GALVANIZING:

A. Hot-dipped zinc coat structural items specifically designated as galvanized after fabrication. Conform to the applicable standard, ASTM A123 or ASTM A153.

B. Use repair coating which conforms to ASTM A780. Acceptable products include:
   1. Carboline Carbo Zinc No. 11.
   2. Galv-Weld Products Galv-Weld Alloy.
   3. Koppers Organic Zinc coating.

C. Unless otherwise noted all structural steel shall be galvanized.

2.10 FABRICATION

A. Fabricate according to industry reference standards, codes, and these specifications unless directed or shown otherwise.

B. Preassemble items in shop to greatest extent possible to minimize field splicing and assembly. Disassemble units only as necessary for shipping and handling limitations. Use connections that maintain structural value of joined pieces. Clearly mark units for reassembly and coordinated installation.

C. Shear and punch metals cleanly and accurately. Remove burrs.

D. Ease exposed edges to a radius of approximately 1/32-inch (1 mm), unless otherwise indicated. Form bent-metal corners to smallest radius possible without causing grain separation or otherwise impairing work.

E. Weld corners and seams continuously to comply with the following:
   1. Use materials and methods that minimize distortion and develop strength and corrosion resistance of base metals.
   2. Obtain fusion without undercut or overlap.
   3. Remove welding flux immediately.

4. At exposed connections, finish exposed welds and surfaces smooth and blended so no roughness shows after finishing and contour of welded surface matches that of adjacent surface.

F. Provide for anchorage of type indicated; coordinate with supporting structure. Fabricate and space anchoring devices to secure metal fabrications rigidly in place and to support indicated loads.

G. Cut, reinforce, drill, and tap metal fabrications as indicated to receive finish hardware, screws, and similar items.

H. Fabricate joints that will be exposed to weather in a manner to exclude water, or provide weep holes where water may accumulate.

I. Allow for thermal movement resulting from the following maximum change (range) in ambient and surface temperatures by preventing buckling, opening up of joints, overstressing of components, failure of connections, and other detrimental effects. Base engineering calculation on surface temperatures of materials due to both solar heat gain and nighttime-sky heat loss. Temperature Change (Range): 120 deg F (67 deg C), ambient; 180 deg F (100 deg C), material surfaces.

J. Form exposed work true to line and level with accurate angles and surfaces and straight sharp edges.

K. Remove sharp or rough areas on exposed traffic surfaces.

L. Form exposed connections with hairline joints, flush and smooth, using concealed fasteners where possible. Use exposed fasteners of type indicated or, if not indicated, Phillips flat-head (countersunk) screws or bolts. Locate joints where least conspicuous.

2.11 WELDING

A. Perform welding in accord with the AWS reference standard. Use procedures such as preheat or interpass temperature as recommended by AWS standards.

B. All shop and field welding must be performed by qualified welders who hold current welding certificates.

C. Surfaces to be welded must be free of loose scale, slag, rust, grease, paint and other foreign material. Mill scale which withstands vigorous wire brushing may remain.

D. Joint surfaces must be free of fins and tears caused by shearing. Wherever practicable, prepare edges by gas cutting using a mechanically guided torch.

E. Electrodes:
1. For structural steel, use AWS Low Hydrogen, Electrode E70XX Series suitable for the welding process used.
2. For stainless steel, use 70 ksi minimum tensile strength filler material suitable for base metals and welding process in accordance with AWS specifications.
3. For aluminum, use filler alloy 5356 in accordance with AWS specifications.
4. Protect electrodes from exposure to moisture and coating.

F. If shop welding is done by automatic, submerged arc process, verify that physical properties of deposited weld metal will be similar to properties of the base metal.

G. No welding shall be done when the temperature of the base metal is below 32°F.

H. The cover bead or finish pass must have a smooth, uniform surface with reinforcement of 1/16 to 1/8 inch. Surface voids, cracks in finish weldments, or undercutting of base metal at the fusion line is not acceptable.

2.12 SURFACE PREPARATION AND PAINTING

A. All surfaces shall be prepared and finished in accordance with Division 9 requirements unless otherwise noted in the Drawings. Structural steel shall be shop primed. Stainless steel shall not be coated unless otherwise specified in the Drawings or elsewhere in the Specifications.

B. Galvanize structural steel items specifically shown or specified as galvanized in the Drawings. Members that are warped during the galvanizing process will be rejected.

2.13 INSPECTION AND TESTING

A. Mill or shop inspection and non-destructive testing (in addition to field inspection and non-destructive testing) may be done by the Owner.

B. Inspection in mill, shop, or field in no way relieves the Contractor from his responsibility to furnish satisfactory materials. Right is reserved to reject material at any time before final acceptance if material and workmanship do not conform to drawings and specifications.

PART 3 EXECUTION

3.1 INSTALLATION

A. Install items according to industry specifications and codes and reviewed shop drawings.

B. Fastening to In-Place Construction:
1. Provide anchorage devices and fasteners where necessary for securing metal fabrications to in-place construction. Include threaded fasteners for concrete and masonry inserts, toggle bolts, through-bolts and other connectors.

C. Cutting, Fitting, and Placement:
1. Perform cutting, drilling, and fitting required for installing metal fabrications. Set metal fabrications accurately in location, alignment, and elevation; with edges and surfaces level, plumb, true, and free of rack; and measured from established lines and levels.

D. Provide temporary bracing or anchors in formwork for items that are to be built into concrete, masonry, or similar construction.

E. Fit exposed connections accurately together to form hairline joints. Weld connections that are not to be left as exposed joints but cannot be shop welded because of shipping size

limitations. Do not weld, cut, or abrade surfaces of exterior units that have been hot-dip galvanized after fabrication and are for bolted or screwed field connections.

F. Field Welding: Comply with the following requirements:
1. Use materials and methods that minimize distortion and develop strength and corrosion resistance of base metals.
2. Obtain fusion without undercut or overlap.
3. Remove welding flux immediately.
4. At exposed connections, finish exposed welds and surfaces smooth and blended so no roughness shows after finishing and contour of welded surface matches that of adjacent surface.

3.2 INSTALLING LADDERS

A. Install ladders to comply with requirements of the Drawings, Specifications and any Manufacturers' written instructions and requirements.

3.3 ADJUSTING AND CLEANING

A. Touchup Painting:
1. Immediately after erection, clean field welds, bolted connections, and abraded areas of shop paint, and paint exposed areas with the same material as used for shop painting to comply with SSPC-PA1 for touching up shop-painted surfaces. Apply by brush or spray to provide a minimum 2.0-mil dry film thickness.
2. Cleaning and touchup painting of field welds, bolted connections, and abraded areas of shop paint are specified in Division 9.

B. Repair of Galvanized Surfaces:
1. Thoroughly clean field welds, bolted connections, abrasions, abraded areas and galvanized surfaces damaged from welding, handling, or installation shall be repaired immediately after installation with galvanizing repair material. Apply matching galvanized repair coat as specified in this Section. Galvanizing repair shall be performed and completed before concrete is placed. Any member requiring repair of more than 2 percent of the surface area shall be rejected.

END OF SECTION

THIS PAGE INTENTIONALLY LEFT BLANK FOR DOUBLE SIDED PRINTING

SECTION 05_52_00

METAL RAILINGS

PART 1 GENERAL

1.1 SUMMARY

A. Metal railings as required by this section of the Contract Documents, unless otherwise indicated specifically on individual plans and appropriate sections of Contract Documents.

B. Any Drawing or Specification that conflicts with this Specification Section shall be brought to the attention of the Engineer prior to bid. When no clarification is provided the Contractor is to assume that more expensive & restrictive product/system/item applies and shall be included in the Contractor's bid.

C. Information shown on the Drawings is for reference only as to location. It is the intent that the any system / component be provided in a single system from a single manufacturer and designed and detailed under the supervision of an Oklahoma Registered Structural Engineer (SE.)

D. Provide a letter sealed by a Licensed Professional Structural Engineer (SE) in the State which the project will be built stating that the proposed items have been designed and detailed under their supervision and meet all codes referenced by this Section and requirements of this Section.

E. All listed iron and steel products used in this project must be produced in the United States. The term "iron and steel products" means the following products made primarily of iron or steel: lined or unlined pipes and fittings, manhole covers and other municipal castings, hydrants, tanks, flanges, pipe clamps and restraints, valves, structural steel, reinforced precast concrete, and construction materials. The deminimis and minor components waiver apply to this contract for minor components.

1.2 RELATED SECTIONS

A. Section 01_00_01 Basic Requirements

B. Section 01_33_01 General Submittal Requirements

C. The Contract Documents are a complete unit and complementary to each other. The individual Specification sections and other Contract Documents do not contain all cross references to "related work" or "related sections." It is the Contractor's responsibility to review the complete Contract Documents in order to properly scope, schedule and coordinate the work of any/all subcontractors, suppliers, and others on this project. Anything called out in one location of the Contract Documents is binding as if it were called out in all sections of the Contract Documents.

1.3 SUBMITTALS

A. Submittals for products and miscellaneous items in this specification section shall be submitted in accordance with Section 01_33_01 General Submittal Requirements and related submittal sections and provisions of the Contract Documents.

B. Shop Drawings
   1. Submit shop drawings as specified in Division 1, General Provisions and required by the Contract Documents.
   2. Submit detailed shop drawings showing sizes of members, method of assembly, anchorage, and connection to other members for approval prior to fabrication.

C. Provide a letter sealed by a Licensed Professional Structural Engineer in the State which the project will be built stating that the proposed items have been designed and detailed under their supervision and meet all codes referenced by this Section and requirements of this Section.

D. Submit Manufacturer's product data including span and deflection tables and details of construction.

E. Submit Manufacturer's installation instructions.

F. Submit samples if requested by the Engineer.

1.4 REFERENCES

A. The Contractor and/or Manufacturer shall follow the standards listed below, except as otherwise specified herein. The latest revision or edition in effect at the time of bid opening shall be utilized.

B. International Code Council
   1. International Building Code (IBC)
   2. American Society of Civil Engineers (ASCE)
   3. ASCE-7: Minimum Design Loads for Buildings and Other Structures

C. The Aluminum Association
   1. Aluminum Design Manual.

D. American Institute of Steel Construction (AISC).
   1. Steel Construction Manual.
   2. Design Guide 27 – Structural Stainless Steel.
   3. American Welding Society (AWS):
   4. D1.2 Structural Welding Code – Aluminum
   5. D1.6 Structural Welding Code – Stainless Steel

E. American Society for Testing and Materials (ASTM):
   1. ASTM A193 - Standard Specification for Alloy-Steel and Stainless Steel Bolting for High Temperature or High Pressure Service and Other Special Purpose Applications.
   2. ASTM A240 – Standard Specification for Chromium and Chromium-Nickel Stainless Steel Plate, Sheet and Strip for pressure Vessels and General Applications.

3. ASTM A276 - Standard Specification for Stainless Steel Bars and Shapes.
4. ASTM B26 – Standard Specification for Aluminum-Alloy Sand Castings.
5. ASTM B136 – Standard Method for Measurement of Stain Resistance of Anodic Coatings on Aluminum.
6. ASTM B137 – Standard Test Method for Measurement of Coating Mass Per Unit Area on Anodically Coated Aluminum.
7. ASTM B209 - Standard Specification for Aluminum and Aluminum-Alloy Sheet and Plate.
8. ASTM B210 – Standard Specification for Aluminum and Aluminum-Alloy Drawn Seamless Tubes.
9. ASTM B221 - Standard Specification for Aluminum and Aluminum-Alloy Extruded Bars, Rods, Wire, Profiles, and Tubes.
10. ASTM B241 – Standard Specification for Aluminum and Aluminum-Alloy Seamless Pipe and Seamless Extruded Tube.
11. ASTM B244 – Standard Test Method for Measurement of Thickness of Anodic Coatings on Aluminum and of Other Nonconductive Coatings on Nonmagnetic Basis Metals with Eddy-Current Instruments.
12. ASTM B247 – Standard Specification for Aluminum and Aluminum-Alloy Die Forgings, Hand Forgings, and Rolled Ring Forgings.
13. ASTM B429 – Standard Specification for Aluminum-Alloy Extruded Structural Pipe and Tube.
14. ASTM F593 - Standard Specification for Stainless Steel Bolts, Hex Cap Screws, and Studs.
15. ASTM F594 - Standard Specification for Stainless Steel Nuts.
16. The American Society of Safety Engineers (ASSE)
17. ASSE A1264.1, Safety Requirements for Workplace Walking/Working Surfaces & Their Access; Workplace Floor, Wall & Roof Openings; Stairs & Guardrails Systems

F. United States Department of Labor:
   1. OHSA Regulations (Standards - 29 CFR):
      a. Part 1926 - Safety and Health Regulations for Construction.

PART 2 PRODUCTS

2.1 GENERALS

A. Provide materials with smooth, flat surfaces without blemishes. Do not use materials with exposed pitting, seam marks, roller marks, rolled trade names, or roughness.

2.2 ALUMINUM

A. Materials
   1. Aluminum structural shapes, bars and plates:
      a. Alloy 6061-T6.
   2. Extruded aluminum pipe:
      a. Alloy 6063-T6 or 6061-T6.
   3. Aluminum Castings:
      a. Alloy 535.

B. Fabrication

1. Follow general fabrication requirements elsewhere in this Section.
2. Structural shapes and extruded items shall comply with the dimensions on the Drawings within the tolerances published by the Aluminum Association.
3. Weld aluminum work on the unexposed side when possible in order to prevent pitting or discoloration of exposed aluminum surfaces.

C. Finishes
1. All exposed aluminum surfaces shall have anodized finish unless otherwise specified. Apply a coat of methacrylate lacquer to all aluminum before shipment.

2.3 GALVANIZED STEEL

A. Materials
1. Use ASTM A53, Type E or S, Grade B, welded or seamless steel pipe. No hydrostatic tests required.

B. Fabrication
1. Follow general fabrication requirements elsewhere in this Section.
2. Structural shapes shall comply with the dimensions on the Drawings within the tolerances published by AISC.

C. Finishes
1. All exposed surfaces shall be galvanized per the requirements elsewhere in this section.

2.4 STAINLESS STEEL

A. Stainless Steel:
1. Use the stainless steel grade indicated on the drawings (304 or 316). Where the grade is not specified use AISI 316. Use a weldable (304L or 316L) grade of stainless steel for welded items.
2. For all stainless steel, required minimum yield strength is as follows unless otherwise noted on the Drawings.
   a. 304 or 316: 30,000 psi.
   b. 304L or 316L: 25,000 psi.

B. Fabrication
1. Follow general fabrication requirements elsewhere in this Section.
2. Structural shapes shall comply with the dimensions on the Drawings within the tolerances published by AISC.

C. Finishes
1. All stainless steel surfaces shall have fabricator's standard mill finish unless otherwise specified.

2.5 FASTENERS:

A. A. Provide ASTM F593 and F594, Condition CW, Type 316 anchor bolts, nuts and washers.

2.6 ANCHOR BOLTS

A. A. Provide ASTM F593 and F594, Condition CW, Type 316 anchor bolts, nuts and washers.

2.7 HANDRAILS & RAILINGS

A. General:
1. Provide handrail and railing system of the material specified as shown on the Drawings.
2. Provide a system with three (3) rails and posts with a maximum spacing of four (4) feet. Provide toeboards as required by the referenced codes. The layout and geometry of the system must meet the performance criteria requirements referenced by this Section.
3. Where geometric requirements result in post locations at or near end of runs, uniformly space intermediate posts as required to meet loading and deflection criteria specified, but not greater than maximum spacing specified. Where posts are required at straight walkways and other locations where railing is provided on each side, locate railing system posts opposite each other; do not stagger.
4. Provide member sizes and connections to comply with required system performance criteria loadings and minimum safety factor specified in addition to all code requirements within, or referenced by, this Section.

B. Allowable Tolerances:
1. Limit variation of cast-in-place inserts, sleeves and field-drilled anchor and fastener holes to the following:
a. Spacing: ±3/8-inch.
b. Alignment: ±1/4-inch.
c. Plumbness: ±1/8-inch.
2. Minimum Handrails and Railings Systems Plumb Criteria:
a. Limit variation of completed handrail and railing system alignment to 1/4-inch in 12 feet - 0 inches with posts set plumb to within 1/16-inch in 3 foot - 0 inches.
b. Align rails so variations from level for horizontal members and from parallel with rake of stairs and ramps for sloping members do not exceed 1/4-inch in 12 feet - 0 inches.
c. Provide "pencil-line" thin butt joints.

C. Performance Criteria:
1. Handrails, railings, toeboards and all other related components shall be certified to meet:
a. Code requirements of IBC Section 1012 and 1013.
b. Load requirements of ASCE-7, Section 4.5.1.
c. OSHA Regulations Standard 1926.502.
2. If there is a conflict between code requirements, the more stringent requirements shall apply.

D. Expansion Joints:
1. Provide adequate expansion joints within the railing system to accommodate thermal movements by a material temperature range of 120F to 0F without warping or bowing of system components. Distance between expansion joints shall

be based on providing a 1/4-inch wide joint at 70F, which accommodates a movement of 150 percent of the calculated amount of movement for the specified temperature range.

2. Provide expansion joints in handrail and railing systems where systems cross expansion joints in structure.

E. Gates:
1. Hinges: Provide two self-closing hinges for each railing system gate shown on the Drawings.
2. Latches and Stops: Provide one latch and stop with rubber bumper and 1-inch diameter plastic knob for each railing system gate shown on the Drawings.
3. Provide hinges and latches in same material as railing system.

F. Safety Chains:
1. Provide oblong 0.250-inch welded link, Type 316 stainless steel chain, each link 1-1/8-inch by 7/16-inch.
2. Provide stainless steel eyebolts, ¼-inch stainless steel threaded quick links and heavy-duty swivel snaps with spring-loaded latch.

G. Fabrication:
1. Close pipe ends by using prefabricated fittings.
2. Remove burrs from all exposed edges.
3. Weep Holes:
   a. Fabricate joints, which will be exposed to the weather so as to exclude water.
   b. Provide 1/4-inch diameter weep holes at the lowest possible point on all handrail and railing systems posts.
   c. Provide pressure relief holes at closed ends of handrail and railing systems.
4. All railing system posts shall be provided with a circular profile solid reinforcing bar with outside diameter equal to inside diameter of post. Each post shall receive one reinforcing bar.

2.8 FABRICATION

A. Begin fabrication of items only after shop drawings have been reviewed with no exceptions taken. Fabricate according to industry reference standards, codes, and these specifications unless directed or shown otherwise.

B. Preassemble items in shop to greatest extent possible to minimize field splicing and assembly. Disassemble units only as necessary for shipping and handling limitations. Use connections that maintain structural value of joined pieces. Clearly mark units for reassembly and coordinated installation.

C. Shear and punch metals cleanly and accurately. Remove burrs.

D. Ease exposed edges to a radius of approximately 1/32-inch (1 mm), unless otherwise indicated. Form bent-metal corners to smallest radius possible without causing grain separation or otherwise impairing work.
1. Weld corners and seams continuously to comply with the following:
2. Use materials and methods that minimize distortion and develop strength and corrosion resistance of base metals.

3. Obtain fusion without undercut or overlap.
4. Remove welding flux immediately.

E. At exposed connections, finish exposed welds and surfaces smooth and blended so no roughness shows after finishing and contour of welded surface matches that of adjacent surface.

F. Provide for anchorage of type indicated; coordinate with supporting structure. Fabricate and space anchoring devices to secure metal fabrications rigidly in place and to support indicated loads.

G. Cut, reinforce, drill, and tap metal fabrications as indicated to receive finish hardware, screws, and similar items.

H. Fabricate joints that will be exposed to weather in a manner to exclude water, or provide weep holes where water may accumulate.

I. Allow for thermal movement resulting from the following maximum change (range) in ambient and surface temperatures by preventing buckling, opening up of joints, overstressing of components, failure of connections, and other detrimental effects. Base

J. engineering calculation on surface temperatures of materials due to both solar heat gain and nighttime-sky heat loss.
1. Temperature Change (Range): 120 deg F (67 deg C), ambient; 180 deg F (100 deg C), material surfaces.

K. Form exposed work true to line and level with accurate angles and surfaces and straight sharp edges.

L. Remove sharp or rough areas on exposed traffic surfaces.

M. Form exposed connections with hairline joints, flush and smooth, using concealed fasteners where possible. Use exposed fasteners of type indicated or, if not indicated, Phillips flat-head (countersunk) screws or bolts. Locate joints where least conspicuous.

2.9 WELDING

A. Perform welding in accord with the AWS reference standard. Use procedures such as preheat or interpass temperature as recommended by AWS standards.

B. All shop and field welding must be performed by qualified welders who hold current welding certificates.

C. Surfaces to be welded must be free of loose scale, slag, rust, grease, paint and other foreign material. Mill scale which withstands vigorous wire brushing may remain.

D. Joint surfaces must be free of fins and tears caused by shearing. Wherever practicable, prepare edges by gas cutting using a mechanically guided torch.

E. Electrodes:
1. For aluminum, use filler alloy 5356 in accordance with AWS specifications.

2. For structural steel, use AWS Low Hydrogen, Electrode E70XX Series suitable for the welding process used.
3. For stainless steel, use 70 ksi minimum tensile strength filler material suitable for base metals and welding process in accordance with AWS specifications.
4. Protect electrodes from exposure to moisture and coating.

F. If shop welding is done by automatic, submerged arc process, verify that physical properties of deposited weld metal will be similar to properties of the base metal.

G. No welding shall be done when the temperature of the base metal is below 32°F.

H. The cover bead or finish pass must have a smooth, uniform surface with reinforcement of 1/16 to 1/8 inch. Surface voids, cracks in finish weldments, or undercutting of base metal at the fusion line is not acceptable.

2.10 GALVANIZING:

A. Hot-dipped zinc coat structural items specifically designated as galvanized after fabrication. Conform to the applicable standard, ASTM A123 or ASTM A153.

B. Use repair coating which conforms to ASTM A780. Acceptable products include:

C. Carboline Carbo Zinc No. 11.

D. Galv-Weld Products Galv-Weld Alloy.

E. Koppers Organic Zinc coating.

F. All non-stainless steel railing not called to be coated in the Drawings or Specifications shall be galvanized.

2.11 INSPECTION AND TESTING

A. Mill or shop inspection and non-destructive testing (in addition to field inspection and non-destructive testing) may be done by the Owner.

B. Inspection in mill, shop, or field in no way relieves the Contractor from his responsibility to furnish satisfactory materials. Right is reserved to reject material at any time before final acceptance if material and workmanship do not conform to drawings and specifications.

PART 3 EXECUTION

3.1 INSTALLATION

A. Install items according to industry specifications and codes and reviewed shop drawings.

3.2 INSTALLING HANDRAILS & RAILINGS

A. Install handrails and railings to comply with requirements of the Drawings, Specifications and any Manufacturers' written instructions and requirements.

3.3 COATING REPAIRS

A. Galvanized Surfaces:

1. Galvanized surfaces damaged from welding, handling, or installation shall be repaired immediately after installation with galvanizing repair material. Galvanizing repair shall be performed and completed before concrete is placed. Any member requiring repair of more than 2% of the surface area shall be rejected and replaced

END OF SECTION

THIS PAGE INTENTIONALLY LEFT BLANK FOR DOUBLE SIDED PRINTING

SECTION 09_91_00.13

PAINTING OF TREATMENT PLANTS

PART 1 GENERAL

1.1 SUMMARY

A. Painting as required by this section of the Contract Documents, uless otherwise indicated specifically on individual plans and appropriate sections of Contract Documents.

B. The work includes painting and finishing of interior and exterior exposed items and surfaces such as structural steel, ferrous tanks, miscellaneous metals, ceilings, walls, floors, doors, frames, transoms, roof fans, construction signs, guardrails, posts, fittings, valves, equipment, and all other work obviously required to be painted unless otherwise specified herein or on the drawings NOT SPECIFIED IN ARCHITECTURAL DRAWINGS OR ARCHITECTURAL SPECIFICATIONS. The omission of minor items in the schedule of work shall not relieve the contractor of his obligation to include such items.

C. Any painting system specifically called out in architectural drawings, architectural specifications, etc for the Office/Lab Building architectural components shall supersede this Specification section.

D. Any painting system specifically called out in other Civil/MEP drawings, specifications, etc that conflicts with this Specification Section shall be brought to the attention of the engineer. When no clarification is provided the contractor is to assume that more expensive painting system to apply shall be included in the contractor's bid.

E. Concrete floor treatment schedule:
1. Main Building floor locations as specified on Architectural Drawings (Northside)
2. Blower Building (Northside)
3. Electrical Building (Southside)

F. Concrete Units/Structures to receive interior coating:
1. All Manholes (interior & exterior)
2. Headworks channels & Grit Removal Channels (Northside & Southside)
3. Influent Lift Station Wetwell (Northside & Southside)
4. Pre-EQ Basin (Northside)
5. Digesters (Northside)
6. Belt Filter Press – area inside containment wall extending over tops of wall and floor.

G. The following items will not be painted:
1. Any code requiring labels, such as Underwriters' Laboratories and Factory Mutual, or any equipment identification, performance rating, name or nomenclature plates.
2. Any moving parts of operating units, mechanical and electrical parts, such as valve and damper operators, linkages, sinkages, sensing devices, motor and fan shafts, unless otherwise indicated.
3. Aluminum handrails, walkways, windows, louvers and grating unless otherwise specified herein.

4. Signs and nameplates.
5. Finish hardware.
6. Stainless steel angles, tubes, pipe, etc.
7. Products with polished chrome, aluminum, nickel, or stainless steel finish.
8. Plastic switch plates and receptacle plates.
9. Flexible couplings, lubricated bearing surfaces, insulation and metal and plastic pipe interior.
10. Sprinkler heads.

1.2 RELATED SECTIONS

A. Section 01_00_01 Basic Requirements

B. Section 01_33_01 General Submittal Requirements

C. Section 09_96_02 Manhole Protective Coatings

D. The Contract Documents are a complete unit and complementary to each other. The individual Specification sections and other Contract Documents do not contain all cross references to "related work" or "related sections." It is the Contractor's responsibility to review the complete Contract Documents in order to properly scope, schedule and coordinate the work of any/all subcontractors, suppliers, and others on this project. Anything called out in one location of the Contract Documents is binding as if it were called out in all sections of the Contract Documents.

1.3 SUBMITTALS

A. Submittals for products and miscellaneous items in this specification section shall be submitted in accordance with Section 01_33_01 General Submittal Requirements and related submittal sections and provisions of the Contract Documents.

B. Samples: Include 8-inch square draw-downs or brush-outs of topcoat finish when requested. Identify each sample as to finish, formula, color name and number and sheen name and gloss units.

C. Manufacturer's instructions: Submit in accordance with requirements for ProductData. Include:
1. Special requirements for transportation and storage.
2. Mixing instructions.
3. Shelf life.
4. Pot life of material.
5. Precautions for applications free of defects.
6. Surface preparation.
7. Method of application.
8. Recommended number of coats.
9. Recommended thickness of each coat.
10. Recommended total thickness.
11. Drying time of each coat, including prime coat.
12. Required prime coat.
13. Compatible and non-compatible prime coats.
14. Recommended thinners, when recommended.

15. Limits of ambient conditions during and after application.
16. Time allowed between coats.
17. Required protection from sun, wind and other conditions.
18. Touch-up requirements and limitations.

D. All limitations, precautions and requirements that may adversely affect the paint; that may cause unsatisfactory results after the painting application; or that may cause the paint not to serve the purpose for which it was intended, that is, to protect the covered material from corrosion, shall be clearly and completely stated in the instructions. These limitations and requirements shall include, but not be limited to, the following:
1. Surface preparation.
2. Methods of application.
3. Number of coats.
4. Thickness of each coat.
5. Total thickness.
6. Drying time of each coat, including primer.
7. Drying time of final coat before placing in service.
8. Time allowed between coats.
9. Primer required to be used.
10. Primers not permitted.
11. Use of a primer.
12. Compatible topcoats.
13. Thinner and use of thinner.
14. Weather limitations during and after application (temperature, humidity, wind velocity).
15. Protection from sun.
16. Physical properties of paint, including percent solids content by volume, ingredient analysis, and weight per unit surface per dry mil thickness.
17. Cathodic disbonding limitations, if any.
18. Equipment settings (air cap, fluid tip, equipment pressure settings, etc.).
19. Manufacturer's specific ventilation requirements for products used on interior surfaces. Ventilation requirements shall be provided to ensure adequate evacuation of solvents to prevent solvent entrapment, worker exposure to solvents above the OSHA PEL and to provide for timely coating system cure.
20. Manufacturer's statement of conformance with ANSI/NSF 61 (NSF International) requirements for use on potable water mains.
21. Cleanup Procedures: Prior to the field cleaning or painting of any surface, the Contractor shall present a written plan to the Owner and Owner’s Representative for review concerning how paint and/or abrasive damage to automobiles and property will be handled, including a process for quick removal of the paint or abrasive, and who will do the work. This approval in no way shall relieve the contractor from the responsibility of settling claims for damage, but is intended as an avenue to expedite and minimize said claims.
22. Containment Procedures: Prior to the field cleaning or painting of any surface, the Contractor shall present a written plan to the Owner and Owner Representative for review concerning how spent cleaning debris and/or paint over spray or droplets will be contained/confined to the jobsite and tank site during the surface preparation and coating application operations. Reasonable care shall be exercised by the Contractor to prevent damage, nuisance, or hazardous conditions to adjacent or nearby property owners.

1.4 REFERENCES

A. ASTM International:
   1. ASTM D16 - Definitions of Terms Relating to Paint, Varnish, Lacquer, and Related Products.
   2. ASTM D4442 - Standard Test Methods for Direct Moisture Content Measurement of Wood and Wood-Base Materials.
   3. ASTM E84 - Standard Test Method for Surface Burning Characteristics of Building Materials.

B. NACE (National Association of Corrosion Engineers) - Industrial Maintenance Painting.

C. NPCA (National Paint and Coatings Association) - Guide to U.S. Government Paint Specifications.

D. PDCA (Painting and Decorating Contractors of America) - Painting - Architectural Specifications Manual.

E. SSPC (Society for Protective Coatings) - Society for Protective Coatings Standards.

F. Materials to be used in contact with the raw water or potable water process stream shall meet the current requirements of the Food and Drug Administration Document, Title 21, Section 175.300 or have been approved by the EPA for potable water use and have been certified by the National Sanitation Foundation for Standard 61 listing. Submit certification that the material meets these requirements.

1.5 QUALITY ASSURANCE

A. Workmanship shall be performed by skilled workmen thoroughly trained in necessary crafts and completely familiar with specific requirements and methods specified herein.

B. The Contractor and/or Manufacturer shall follow the standards listed below, except as otherwise specified herein. The latest revision or edition in effect at the time of bid opening shall be utilized.

C. Products: First line or best grade.

D. Total paint system shall be from one manufacturer and no cross coating allowed between primers and finish coats.

E. Applicator qualifications: Applicator of products similar to specified products withminimum 3 years' experience.

F. Containing Cleaning Debris and Overspray: The Contractor shall ensure that no spent cleaning/blasting debris, dust, overspray, coating droplets, or emissions of any kind, escape to the atmosphere, or adjacent buildings, private property, work sites and parking lots.
   1. The ground and floor shall be protected from any material scraped, sanded or removed in any fashion and the material shall be collected and properly disposed of by the contractor.

2. The Contractor shall be responsible for all materials that are used and for any apparatus used to contain dust, emissions, debris, overspray, and coating droplets.
3. If tarps are used as part of the containment system, the tarps shall be an impervious, solid, flame-resistant material, reinforced with a fiber mesh and shall allow as much light as possible to pass through the material.
4. The Owner reserves the right to stop work or to require additional or different containment methods if the Contractor's operations create a nuisance beyond the site property line in the sole opinion of the Owner, the Owner's designated representative, any regulatory agency, or neighbor. All costs of providing an adequate containment system shall be included by the Contractor in the Base Price Proposal.
5. Review of the containment system for containing the spent cleaning dust, debris, emissions, overspray, and coating droplets shall not warrant the structural integrity of the containment system and shall not warrant the structural integrity of the facility to support the containment system. Nor shall review of the containment system warrant the ability of the system to contain spent cleaning dust, debris, emissions, and overspray.

1.6 APPLICATION REQUIREMENTS

A. Surface moisture contents: Do not paint surfaces that exceed manufacturer specified moisture contents, or when not specified by the manufacturer, the following moisture contents:
   1. Plaster and gypsum wallboard: 12 percent.
   2. Masonry, concrete and concrete block: 12 percent.
   3. Interior located wood: 15 percent.
   4. Concrete floors: 7 percent.

B. Do not paint or coat:
   1. Under dusty conditions.
   2. When light on surfaces measures less than 15 foot-candles.
   3. When ambient or surface temperature is less than 50 degrees Fahrenheit or unless manufacturer allow a lower temperature.
   4. When relative humidity is higher than 85 percent, unless manufacturer allows a higher relative humidity.
   5. When surface temperature is less than 5 degrees Fahrenheit above dew point.
   6. When surface temperature exceeds the manufacturer's recommendation.
   7. When ambient temperature exceeds 90 degrees Fahrenheit, unless manufacturer allows a higher temperature.
   8. Apply clear finishes at minimum 65 degrees Fahrenheit.

C. Provide fans, heating devices, or other means recommended by coating manufacturer to prevent formation of condensate or dew on surface of substrate, coating between coats and within curing time following application of last coat.

D. Provide adequate continuous ventilation and sufficient heating facilities to maintain minimum 50 degrees Fahrenheit for 24 hours before, during and 48 hours after application of finishes.

1.7 PROTECTION

A. Protect adjacent surfaces from paint and damage. Repair damage resulting from inadequate or unsuitable protection.

B. Furnish sufficient drop cloths, shields, and protective equipment to prevent spray or droppings from fouling surfaces not being painted and in particular, surfaces within storage and preparation area.

C. Place cotton waste, cloths, and material that may constitute fire hazard in closedmetal containers and remove daily from site.

D. Remove electrical plates, surface hardware, fittings and fastenings, prior to painting operations.
   1. Carefully store, clean and replace on completion of painting in each area.
   2. Do not use solvent or degreasers to clean hardware that may removepermanent lacquer finish.

1.8 DELIVERY STORAGE & HANDLING

A. Deliver all material to site in original, new, unopened containers, labeled and bearing manufacturer's name and stock number, product and brand name, contents by volume for major constituents, instructions for mixing and reducing, and application instruction.

B. Provide adequate storage facilities designed exclusively for the purpose of paint storage and mixing. Facility area shall be located away from open flames, be well ventilated, and be capable of maintaining ambient storage temperature of no less than 45 degrees F.

C. Paint, coatings, reducing agents, and other solvents must be stored in original containers until opened; if not resealable, then must be transferred to UL approved safety containers. Provide proper ventilation, personal protection and fire protection for storage and use of same.

D. Comply with requirements set forth by Occupational Safety and Health Act, OSHA, for storage and use of painting materials and equipment.

E. Oily or solvent-soaked rags and all waste shall be removed from the job site every night, and all necessary precautions shall be taken to reduce fire hazards to a minimum.

F. Upon completion of the work, if the storage space was a fixed part of the project, it shall be left clean. Any damages to such storage space or its surroundings shall be repaired by the Contractor.

1.9 SAFETY AND HEALTH REQUIREMENTS

A. General: In accordance with requirements set forth by regulatory agencies applicable to the construction industry and Manufacturer's printed instructions and appropriate technical bulletins and manuals, the Contractor shall provide and require use of personal protective lifesaving equipment for persons working on or about the project site.

B. Ventilation: Where ventilation is used to control hazardous exposure, all equipment shall be explosion-proof. Ventilation shall reduce the concentration of air contaminants to the degree a hazard does not exist. Forced air circulation and exhausting of solvent vapors shall be continued until coatings have fully cured.

C. Whenever the occupational sound levels exceed the OSHA Standard 29 CFR 1926.52, the Contractor shall implement exposure control measures that protect employee hearing against the affects from these sound levels. One such control measure can be the use of hearing protective devices.

D. Illumination: Adequate illumination shall be provided while work is in progress, including explosion-proof lights and electrical equipment. Whenever required by the Owner's Representative, the Contractor shall provide additional illumination and necessary supports to cover all areas to be inspected. The level of illumination purposes shall be determined by the Owner's Representative.

1.10 EXTRA STOCK

A. Upon completion of work, provide owner with at least one gallon of each type and color of product used.

B. Containers shall be tightly sealed and clearly labeled for identification.

PART 2 PRODUCTS

2.1 GENERAL

A. The number of coats called for in this schedule shall be considered minimum. If more coats are required for complete coverage and uniform appearance, they shall be applied. Colors will be selected by the Owner from standard manufacturer's color samples. For cold weather applications, substitute Tnemec "fast cure" version of specified product. "Fast Cure" products must be submitted and approved by Engineer prior to project start.

2.2 COLOR SCHEDULE

A. Final color selection will be made by the Owner's Representative from color chips submitted by the Contractor; colors selected may or may not be a Manufacturer's standard color. Submit color charts to Owner at least 60 days prior to paint application to allow time for color selection.

B. Shop Painted Equipment: Motors, equipment, pumps, valve bodies and metal pump bases shall be shop painted, unless specified otherwise.
   1. Motors, equipment, pumps, pump bases and valve bodies shall be painted color as selected by the Owner.
   2. All bronze or stainless-steel valve bodies shall not be painted.

C. Moving Parts and Guards.
   1. Do not paint moving parts of operating units, mechanical and electrical parts, such as valve and damper operators, linkages, sensing devices, motor, fan shafts, etc.

2. Contractor shall coordinate with Owner on color selection prior to painting guards or shields.

2.3 ACCEPTABLE MANUFACTURERS

A. Materials specified are those that have been evaluated for the specific service and are as supplied the Tnemec Company, Inc.

B. Equivalent materials of other manufacturer's may be submitted on written approval of the Engineer. As part of the proof of equality, the Engineer will require at the cost of the Contractor, certified test reports from a nationally known, reputable and independent testing laboratory conducting comparative tests as directed by the Engineer between the product specified and the requested substitution.

C. Requests for substitution shall include manufacturer's literature for each product giving name, product number, generic type, descriptive information, solids by volume, recommended dry film thickness and certified lab test reports showing results to equal the performance criteria of the products specified herein

D. All requests for product substitution shall be made at least 10 days prior to the bid date. Proposed substitute products and systems must have a minimum of 5 years satisfactory service in the field. Included with above information, provide a list of 5 projects satisfactorily completed by the contractor of similar size and scope utilizing proposed substitute systems and products.

E. Manufacturer's color charts shall be submitted to the Engineer at least 30 days prior to coating and/or paint application. General Contractor and Painting Contractor shall coordinate work so as to allow sufficient time (normally seven to ten days) for paint to be delivered to the job site.

2.4 COATING SCHEDULE

A. General
1. The number of coats called for in this schedule shall be considered minimum. If more coats are required for complete coverage and uniform appearance, they shall be applied. Colors will be selected by the Owner from standard manufacturer's color samples. For cold weather applications, substitute Tnemec "fast cure" version of specified product. "Fast Cure" products must be submitted and approved by Engineer prior to project start.
2. Types of Structures is for reference only. Should a structure not be specifically listed the painting system it should be equivalent to similar specified structures. Notify Engineer for clarification prior to bid.
3. All finished coatings on horizontal surfaces must be non-skid, slip-resistant.

B. Ferrous Metal, Interior, Non-Immersed, Subject to Non-Abrasive Conditions:
1. General. All interior above ground ferrous surfaces subject to dry non-abrasive conditions shall be painted in accordance to the following provisions. This includes, but is not limited to: exposed pumps, exterior of valves, pipes, motors, machinery, and miscellaneous metals such as structural steel. May be factory/shop coated.
2. Surface Preparation. SSPC SP-6 Commercial Blast Cleaning, Reference Part 2.02 Surface Preparation, item D for description.

3. Coating (Epoxy-Polyamide)

Coating		Dry Film-Mils
Primer Coat:	N69 Hi-Build Epoxoline II	5.0
Finish Coat:	N69 Hi-Build Epoxoline II	5.0

C. Ferrous Metal, Non-Immersed, Subject to Non-Abrasive Conditions:
1. General. All exterior ferrous surfaces not submerged, and subject to non-abrasive conditions shall be painted in accordance to the following provisions. This includes but is not limited to: Exterior of non-submerged equipment, valves, pipes (not listed elsewhere), pipe sleeves, brackets, grates, structural steel, light poles, exterior face of overhead doors, etc. Surfaces intermittently or partially submerged will be treated as submerged.
2. Surface Preparation. SSPC SP-6 Commercial Blast Cleaning. Reference Part 2.02 Surface Preparation D for description.
3. Coating (Aliphatic-Polyurethane System)

Coating		Dry Film-Mils
Primer Coat:	N69 Hi-Build Epoxoline II	5.0
Finish Coat:	Tnemec Series 1094 Endura-Shield	4.0

D. Ferrous Metals, Immersed or Subject to Abrasive Conditions
1. General. All ferrous surfaces below ground level, submerged, or subject to abrasive conditions shall be painted in accordance with the following provisions. This includes but is not limited to: Ladders, grates, checkered plates, handrails, access covers, exterior of submerged valves, piping (not listed elsewhere), brackets, structural steel, sluice gates, roller gates, drains, etc. (Surfaces that are questionable as to if they are subject to submerged or abrasive conditions will be considered as subject to those conditions).
2. Surface Preparation. SSPC SP-10 Near White Metal Blast Cleaning. Reference Part 2.02 Surface Preparation Ferrous Metal D for description.
3. Coating (Epoxy-Polyamide System)

Coating		Dry Film-Mils
Primer Coat:	N69 Hi-Build Epoxoline	7.0
Finish Coat:	N69 Hi-Build Epoxoline	7.0

E. Non-Ferrous Metal Interior:
1. General. All non-ferrous surfaces where painting is required shall be painted in accordance with the following provisions. This includes but is not limited to: pipe supports, underside of roof decks and service doors.
2. Surface Preparation. SSPC-SP6 Commercial Blast Cleaning. Reference Part 2.02 Surface Preparation D for description.
3. Coating (Epoxy-Polyamide System)

Coating		Dry Film-Mils
Primer Coat:	N69 Hi-Build Epoxoline II	4.0
Finish Coat:	N69 Hi-Build Epoxoline II	5.0

For exterior installations replace finish coat above with:

Finish Coat:	Series 1094 Endura-Shield	3.0

F. Exterior Exposed Ductile Iron Pipe
1. All exterior exposed ductile iron pipe
2. Surface Preparation: Clean all surfaces as per SSPC-SPI Solvent Cleaning. Measure surface profile in accordance with ASTM D 4417, Method C. If surface profile is less than 1.5 mils, abrasive blast as per SSPC-SP7 Brush-Off Blast Cleaning. If surface profile is greater than 1.5 mils, clean as per SSPC-SP3 Power Tool Cleaning.

Coating		Dry Film-Mils
Primer Coat:	N69 Hi-Build Epoxoline II	5.0
Intermediate:	N69 Hi-Build Epoxoline II	4.0
Finish Coat:	Series 1094 Endura-Shield	3.0

G. Interior Exposed Ductile Iron Pipe
1. All interior exposed ductile iron pipe
2. Surface Preparation: Clean all surfaces as per SSPC-SPI Solvent Cleaning. Measure surface profile in accordance with ASTM D 4417, Method C. If surface profile is less than 1.5 mils, abrasive blast as per SSPC-SP7 Brush-Off Blast Cleaning. If surface profile is greater than 1.5 mils, clean as per SSPC-SP3 Power Tool Cleaning.

Coating		Dry Film-Mils
Primer Coat:	N69 Hi-Build Epoxoline II	5.0
Finish Coat:	N69 Hi-Build Epoxoline II	4.0

H. Aluminum, Stainless Steel, Galvanized Steel, Copper, or Brass: Unless specifically called out, only clean these surfaces. Do not paint.

I. All Aluminum in Contact with Dissimilar Materials:
1. Surface Preparation. Remove all foreign matter and apply sealer as required by coating Manufacturer.
2. Coating (Epoxy-Polyamide)

Coating		Dry Film-Mils
Primer Coat:	N69 Hi-Build Epoxoline II	5.0
Finish Coat:	N69 Hi-Build Epoxoline II	4.0

J. Concrete, Submerged/Interior (Non-Potable)
1. Exterior concrete surfaces submerged and not listed as severe duty such as influent or effluent channels, parshall flumes, tank structures including, but not limited to:
   a. UV /NonPot Channels & Floor (Northside)
   b. SBR/PreEQ/Digester/PostEQ Structure Interior Walls & Floor (Northside)
   c. Valve Vaults (Northside & Southside)
   d. Wetwells (Northside & Southside)
2. Surface Preparation: Allow new masonry to cure 28 days. All surfaces shall be dry, clean and free of all contaminants. Brush-Off Blast all surfaces to be coated. Fill all voids and bugholes with Tnemec Series 218 Mortarclad.

Coating		Dry Film-Mils
Filler/Surfacer:	Tnemec Series 218 Mortarclad	1/16" to ½"
Initial Coat:	Tnemec Series 435 Perma-Glaze	20.0 to 40.0
Finish Coat:	Tnemec Series 435 Perma-Glaze	20.0 to 40.0

K. Exterior Concrete – Exposed, Non-Submerged
1. Surfaces include:
   a. SBR/PreEQ/Digester/PostEQ Structure Exterior Walls (Northside)
   b. Headworks Structure Interior Walls (Northside)
   c. Influent Lift Station & Vaults (Northside & Southside)
2. Surface Preparation: Remove all grease, oils and grime by washing with an emulsifying alkaline waterbase cleaner. All surface contaminants including existing coatings shall be removed prior to application of new coating. Brush blast or acid-etch concrete prior to coating. Surface preparation shall be as per Manufacturer's recommendations.

Coating		Dry Film-Mils
Primer Coat:	Not required	N/A
Initial Coat:	Tnemec Series 156 Enviro-Crete	12.0
Finish Coat:	Tnemec Series 157 Enviro-Crete	12.0

L. Concrete – Secondary Containment or Severe Duty
1. Severe Duty Areas include:
   a. Pre-Equalization Basin (Northside)
   b. Headworks & Grit Removal Channels (Northside & Southside)
   c. Influent Lift Station Wetwells (Northside & Southside)
2. Surface Preparation: Allow new concrete to cure 28 days. Abrasive blast as per SSPC-SP13 Surface Preparation of Concrete, achieving a surface profile equal to ICRI CSP 3 to 5. All surfaces shall be dry, clean and free of dust, dirt, oil, grease and other contaminants. Fill all voids, divots and cracks with Tnemec Series 215 Surfacing Epoxy and strike flush with adjacent surfaces.

Coating		Dry Film-Mils
Filler/Surfacer:	Tnemec Series 218 Mortarclad	1/16" to ½"
Initial Coat:	Tnemec Series 435 Perma-Glaze	20.0 to 40.0
Finish Coat:	Tnemec Series 435 Perma-Glaze	20.0 to 40.0

M. Concrete Manholes (Interior)
1. All concrete manhole interiors are to be coated:
2. Surface Preparation: SSPC-SP13 / NACE 6, ICRI CSP 5

Coating		Dry Film-Mils
Filler/Surfacer:	Tnemec Series 218 Mortarclad	1/16" to ½"
Initial Coat:	Tnemec Series 435 Perma-Glaze	20.0 to 40.0
Finish Coat:	Tnemec Series 435 Perma-Glaze	20.0 to 40.0

N. Concrete Manholes (Exterior)
1. All concrete manhole exteriors are to be coated:
2. Surface Preparation: SSPC-SP13 / NACE 6, ICRI CSP 3

Coating		Dry Film-Mils
First Coat:	Tnemec Series 46H-413 HB Tneme-Tar	14.0 to 20.0

O. Interior CMU - Exposed

1. Surface Preparation: Remove all oil, grease, and other contaminants. Allow mortar to cure for 14 days. Surface preparation shall be as per Manufacturer's recommendations.

Coating		Dry Film-Mils
First Coat:	Tnemec Series 130 Enviro	75 sq ft / gallon
Second Coat:	Tnemec Series N69 Hi-Build Epoxoline II	5.0
Third Coat:	Tnemec Series N69 Hi-Build Epoxoline II	5.0

P. Exterior Concrete Block Masonry – Exposed

1. Surface Preparation: Remove all oil, grease, and other contaminants. Allow mortar to cure for 14 days. Surface preparation shall be as per Manufacturer's recommendations.

Coating		Dry Film-Mils
First Coat:	Series 130 Enviro	115 sqft / gallon
Second Coat:	Tnemec Series 180 Tneme-Crete	6.0
Third Coat:	Tnemec Sereis 180 Tneme-Crete	6.0

Q. Interior PVC Pipe

1. Surface Preparation. As recommended by Manufacturer.
2. Coating (Epoxy-Polyamide)

Coating		Dry Film-Mils
First Coat:	Tnemec, N69 Hi-Build Epoxoline II	6.0

R. Exterior PVC Pipe

1. Surface Preparation. As recommended by Manufacturer.
   Coating (Hybrid-Polyurethane System).

Coating		Dry Film-Mils
Primer Coat:	Tnemec, N69 Hi-Build Epoxoline II	6.0
Finish Coat:	Series 1094 Endura-Shield	3.0

S. Interior Concrete Floors

1. All interior concrete floors where concrete will serve as the final wearing surface
2. Surface Preparation: Mechanically abrade per manufacturers recommendation.
3. The following locations will receive floor coating:
   a. Main Building floor locations as specified on Architectural Drawings (Northside)
   b. Blower Building (Northside)
   c. Electrical Building (Southside)
   d. Any additional location specifically called out on Drawings.

Coating		Dry Film-Mils
1st Coat:	Series 201 Epoxoprime	190 Sq. Ft./Gal
2nd Coat:	Series 280 Tneme Glaze	200 Sq. Ft./Gal

	3rd Coat:	Series 291 CRU	537 Sq. Ft./Gal.

2.5 COATING SYSTEM SCHEDULE, INSULATED PIPE

Surface Preparation:		Surface shall be clean and dry	Dry Film-Mils
1.	1st Coat:	Series 1029 Color EnduraTone	2.5-3.0
2.	2nd Coat:	Series 1029 Color EnduraTone	2.5-3.0

2.6 TNEMEC COLOR SYSTEM MATERIAL IDENTIFICATION

A. The following Tnemec colors/materials shall be utilized:

1.	Raw Water	olive green	110GN Clover
2.	Settled or Clarified	aqua	10GN Aqua Sky
3.	Finished or Potable	dark blue	11SF Safety Blue
4.	Sewage Plant Effluent	clay	07RD Terra Cotta
5.	Backwash Waste	light brown	68BR Twine
6.	Reclaimed Water	light purple	R0715 Light Purple
7.	Sludge	dark brown	84BR Weathered Bark
8.	Sanitary Sewer	dark gray	34GR Deep Spacel
9.	Alum/Prim Coagulant	orange	04SF Safety Orange
10.	Ammonia	white	11WH White
11.	Carbon Slurry	black	35GR Black
12.	Caustic	yellow with green band	02SF Safety Yellow/ 02SF Safety Green
13.	Chlorine	yellow	02SF Safety Yellow
14.	Chlorine Dioxide	yellow	02SF Safety Yellow
15.	Fluoride	light blue with red band	25BL Fountainbleu/ 06SF Safety Red
16.	Lime Slurry	light green	52GNAztec Grass
17.	Ozone	yellow w/ orange band	02SF Safety Yellow/ 04SF Safety Orange
18.	Phosphate Compounds	light grn w/ red band	52GN Aztec Grass/ 06SF Safety Red
19.	Polymers/coag aids	orange with green band	04SF Safety Orange/ 14SF Safety Purple
20.	Potass/Sod Perman	violet	14SF Safety Purple
21.	Soda Ash	lt grn w/ orange band	52GN Aztec Grass/
22.			04SF Safety Orange
23.	Sulfuric Acid	yellow w/ red band	02SF Safety Yellow/ 06SF Safety Red
24.	Sulfur Dioxide	lt grn w/ yellow band	52GN Aztec Grass/ 02SF Safety Yellow
25.	Compressed Air	dark green	91GN Balsam
26.	Gas	red	28RD Monterrey Tile
27.	Other Lines	light gray	32GR Light Gray
28.	Hoists/Trolleys	yellow	02SF Safety Yellow
29.	Fire Protection	red	06SF Safety Red

PART 3 EXECUTION

3.1 INSPECTION

A. Thoroughly examine surface scheduled to be painted prior to commencing work. Report in writing to the Owner's Representative any condition that may affect proper application and overall performance of coating system. Do not proceed with work until such conditions have been corrected. Commencing with work indicates acceptance of existing conditions and for responsibility for performance of applied coating.

3.2 PROTECTION

A. Extreme diligence shall be taken to ensure that vehicles, equipment, hardware, fixtures, materials, etc., are protected against paint spillage, overspray, etc. Such damages shall be corrected at no expense to Owner.

B. Surfaces not to be coated shall be masked, removed, or otherwise covered to protect against cleaning and coating application procedures and weather. Drop cloths shall be used to protect floor, walls, machinery, equipment, and previously coated surfaces.

C. Exercise care in erecting, bracing, handling, and dismantling staging and scaffolding, to avoid scratching or damaging walls, floors, equipment, etc.

3.3 SURFACE PREPARATION

A. Surface preparation standards are as described in this specification. The Steel Structures Painting Council, Surface Preparation Specification is used for steel and as a guide for concrete.

B. Solvent Cleaning: Remove oil, grease, soil and other contaminants by use of solvents, emulsions, cleaning compounds, steam cleaning, or similar materials and methods which involve a solvent or cleaning action, in accordance with Steel Structures Painting Council Surface Protection Specifications (SSPC) SP-1. Care must be taken to not allow solvent chemicals to enter treatment processes.

C. Hand Tool Cleaning: Remove all loose mill scale, loose rust, loose paint, and other loose detrimental foreign matter by hand chipping, scraping, sanding, and wire brushing.

D. Grinding: Remove weld splatter and rough edges and grind rough welds so that all surfaces are in proper condition, in the opinion of the Owner’s Representative, to receive the specified coating.

E. Abrasive Grit Cleaning: All abrasive blasting shall be done at the shop in accordance with SSPC-SP 10 near white metal blast. No abrasive blasting shall be allowed at the job site.

F. Alternative surface preparation methods and materials shall be approved by the Owner’s Representative before use. Contractor shall protect all electrical components from entrance of paint, solvents, or blast mediums into the cabinets. Contractor shall be responsible for any damage to switches, contacts, and other electrical controls if contaminated by blast media during painting operations.

3.4 TOUCH UP OF SHOP APPLIED COATINGS

A. All shop applied coatings with manufacturer's standard paint and in non-immersion service, shall be touched up with compatible barrier coating, Tnemec Series I Purple Prime, able to receive specified topcoat(s). Notify Architect/Engineer or Owner's Representative in writing of anticipated problems due to incompatible coating systems.

B. All shop applied coatings with specified primer as listed in PART 4 "Coating System Schedule" shall be touched up with same primer before any topcoat(s) are applied.

3.5 APPLICATION

A. No paint shall be applied when surrounding air temperature, as measured in the shade, is below 45 degrees F. No paint shall be applied when the temperature of the surface to be painted is below 40 degrees F. Paint shall not be applied to wet or damp surfaces, and shall not be applied in rain, snow, fog or mist, or when the relative humidity exceeds 85%. Paint shall not be applied when the substrate temperature is within 5 degrees of the dewpoint. Paint manufacturer's temperature guidelines must be followed.

B. No paint shall be applied when it is expected that the relative humidity will exceed 85% or that the air temperature will drop below 45 degrees F within 4 hours after the application of the paint.

C. Maintain proper ventilation in area of work to alleviate volatile solvents evaporating from coating materials.

D. All ingredients in any container of the coating materials shall be thoroughly mixed and shall be agitated often enough during application to keep the pigment suspended.

E. Should thinning be required use only the amounts specified by the coating manufacturer.

F. Application of coating shall be by brush, roller, mitt, or spray and in accordance with manufacturer's recommendations. All material shall be evenly applied to form a smooth, continuous, unbroken coating. Drips, runs, sags, or pinholes shall not be acceptable.

G. Provide proper application equipment, including ladders, scaffolding, masking materials, and tools to perform work. Ladders and scaffolding shall meet or exceed UL requirements and Metal Ladder Manufacturer's Association.

H. Meet all requirements set forth by Occupational Safety and Health Act, OSHA, for confined space.

3.6 SYSTEM INSPECTION AND TESTING

A. Contractor shall be responsible for and shall bear all the costs to perform the quality control tests for the coating.

B. Should any paint system fail to pass a test, the Contractor shall make necessary changes approved by the Construction Manager for the corrective measures. The paint system will then be retested.

C. After application of each coating in the specified system and its surface has cured, measure its thickness with a properly calibrated Nordson Microtest Dry Film Thickness Gauge, or equivalent. Follow standard method for measurement of dry paint thickness with magnetic gauges as outlined in Steel Structures Painting Council's SSPC PA2¬

D. Make as many determinations as needed to ensure the specified thickness values in each typical area. To all surfaces having less dry film thickness than specified, apply additional coat(s) at no extra cost to Owner to bring thickness up to specifications.

E. Structural metals in immersion service that receive a protective coating system shall be checked with a non destructive holiday detector that shall not exceed 67 1/2 volts. All pinholes or defects shall be repaired in accordance with manufacturer's printed recommendations and then retested.

F. Masonry, drywall, or other non metallic surfaces shall be continuously checked with wet film thickness gauges during application to ensure proper dry film thickness will be attained. Also, square feet coverage needs to be monitored to verify proper coverage rates.

G. Painting contractor shall permit Owner's Representative and/or paint & coating manufacturer (as requested by owner) to inspect his work for conformance to this specification. Owner reserves the right to reject all work that does not comply with this specification.

3.7 CLEAN-UP

A. Upon completion, painting contractor shall clean up and remove from site all surplus materials, tools, appliances, empty cans, cartons, and rubbish resulting from painting work. Site shall be left in neat, orderly condition.

B. Remove all protective drop cloths and masking from surfaces not being painted. Provide touch up around same areas as directed by Owner's Representative.

C. Remove all misplaced paint splatters or drippings resulting from this work.

END OF SECTION

SECTION 10_44_16

FIRE EXTINGUISHERS

PART 1 GENERAL

1.1 SUMMARY

A. Fire Extinguishers as required by this section of the Contract Documents, unless otherwise indicated specifically on individual plans and appropriate sections of Contract Documents.

B. Where fire extinguishers are called out in Architectural or other Drawings they should be considered additional to this Specification.

1.2 RELATED SECTIONS

A. Section 01_00_01 Basic Requirements

B. Section 01_33_01 General Submittal Requirements

C. The Contract Documents are a complete unit and complementary to each other. The individual Specification sections and other Contract Documents do not contain all cross references to "related work" or "related sections." It is the Contractor's responsibility to review the complete Contract Documents in order to properly scope, schedule and coordinate the work of any/all subcontractors, suppliers, and others on this project. Anything called out in one location of the Contract Documents is binding as if it were called out in all sections of the Contract Documents.

1.3 SUBMITTALS

A. Submittals for products and miscellaneous items in this specification section shall be submitted in accordance with Section 01_33_01 General Submittal Requirements and related submittal sections and provisions of the Contract Documents.

PART 2 PRODUCTS

2.1 GENERAL

A. Suggested manufacturer is HS Fire Safety Products, Model 2409R4 by Hallmann Sales, LLC or approved equal.

B. Provide and install in the following quantity to be field located by Owner:
   1. Carbon Dioxide Fire Extinguisher (10 lbs, Total Qty. 10) - Locate as follows:
      a. Southside
         1) Electrical Building (x2)
         2) Headworks
      b. Northside
         1) Electrical Room
         2) Laboratory

3) Belt Press Room
4) Blower Building
5) Headworks
6) Effluent Lift Station
7) TBD

2. Dry Chemical Class (B, C), (10 lbs, Total Qty. 0) - Locate as follows:
   a. None
3. ABC Type Fire Extinguisher (10 lbs, Total Qty. 4) - Locate as follows:
   a. Northside
      1) Kitchen
      2) TDB (x3)

2.2 CABINET

A. Semi-recessed type with flat trim or wall mount if location has solid walls.

B. 9 1/2" x 24" x 6" complying with ADA requirements.

2.3 FABRICATION

A. Form body of cabinet from (0.0359-inch) thick sheet steel.

B. Fabricate door and trim from (0.0478-inch) thick sheet steel with all face joint s fully welded and ground smooth.
   1. Glaze doors with (1/4 inch) thick G- 19, clear acrylic sheet.
   2. Design doors to open 180 degrees.
   3. Provide continuous hinge, pull handle, and adjustable roller catch.

C. Cabinet shall be capable of holding a 10lb Fire Extinguisher.

2.4 FINISH

A. Finish interior of cabinet body with baked-on semi-gloss white enamel.

B. Finish door & frame with manufacturer's standard baked-on prime coat suitable for field painting.

PART 3 EXECUTION

END OF SECTION

SECTION 13_34_19

METAL BUILDING SYSTEMS

PART 1 GENERAL

1.1 SUMMARY

A. Metal Building System as required by this section of the Contract Documents, unless otherwise indicated specifically on individual drawings and/or other appropriate sections of Contract Documents.

B. Information shown on the Drawings is for reference only as to location and conceptual design. It is the intent that the metal building system and components be provided in a single system from a single manufacturer and designed and detailed under the supervision of an Oklahoma Registered Structural Engineer (SE.)

C. Provide a letter sealed by a Licensed Professional Structural Engineer (SE) in the State which the project will be built stating that the proposed metal building system has been designed and detailed under their supervision and meet all codes and requirements referenced by this Section and the Drawings.

D. Any Drawing or Specification that conflicts with this Specification section shall be brought to the attention of the Engineer prior to bid. When no clarification is provided the Contractor is to assume that the more restrictive & expensive product/system/item applies and shall be included in the Contractor's bid.

E. Section includes
1. Structural-steel framing.
2. Metal roof panels.
3. Metal wall panels.
4. Metal soffit panels.
5. Thermal insulation.
6. Accessories

F. All structural steel framing components not having a full applied coating (complying with 09_91_00.13 or equivalent) are to be hot-dipped galvanized. Submittal to contain a cover page listing all materials NOT scheduled to be hot-dipped galvanized.

G. All listed iron and steel products used in this project must be produced in the United States. The term "iron and steel products" means the following products made primarily of iron or steel: lined or unlined pipes and fittings, manhole covers and other municipal castings, hydrants, tanks, flanges, pipe clamps and restraints, valves, structural steel, reinforced precast concrete, and construction materials. The deminimis and minor components waiver apply to this contract for minor components.

1.2 RELATED SECTIONS

A. Section 01_00_01 Basic Requirements

B. Section 01_33_01 General Submittal Requirements

C. The Contract Documents are a complete unit and complementary to each other. The individual Specification sections and other Contract Documents do not contain all cross references to "related work" or "related sections." It is the Contractor's responsibility to review the complete Contract Documents in order to properly scope, schedule and coordinate the work of any/all subcontractors, suppliers, and others on this project. Anything called out in one location of the Contract Documents is binding as if it were called out in all sections of the Contract Documents.

1.3 SUBMITTALS

A. Submittals for products and miscellaneous items in this specification section shall be submitted in accordance with Section 01_33_01 General Submittal Requirements and related submittal sections and provisions of the Contract Documents.

B. Product Data: For each type of metal building system component.

C. Shop Drawings: Indicate components by others. Include full building plan, elevations, sections, details and attachments to other work.

D. Samples: For units with factory-applied finishes.

E. Design Calculations

F. Delegated-Design Submittal: For metal building systems.
1. Include analysis data indicating compliance with performance requirements and design data signed and sealed by the qualified professional engineer responsible for their preparation.

G. Product Data: For each type of metal building system component.

H. Shop Drawings: Indicate components by others. Include full building plan, elevations, sections, details and attachments to other work.

I. Samples: For units with factory-applied finishes.

J. Design Calculations

K. Delegated-Design Submittal: For metal building systems.

L. Include analysis data indicating compliance with performance requirements and design data signed and sealed by the qualified professional engineer responsible for their preparation.

M. Welding certificates.

N. Letter of Design Certification: Signed and sealed by a qualified professional engineer registered in the state of Oklahoma. Include the following:
1. Name and location of Project.
2. Order number.

3. Name of manufacturer.
4. Name of Contractor.
5. Building dimensions including width, length, height, and roof slope.
6. Indicate compliance with AISC standards for hot-rolled steel and AISI standards for cold-rolled steel, including edition dates of each standard.
7. Governing building code and year of edition.
8. Design Loads: Include dead load, roof live load, collateral loads, roof snow load, deflection, wind loads/speeds and exposure, seismic design category or effective peak velocity-related acceleration/peak acceleration, and auxiliary loads (cranes).
9. Load Combinations: Indicate that loads were applied acting simultaneously with concentrated loads, according to governing building code.
10. Building-Use Category: Indicate category of building use and its effect on load importance factors.
11. Foundation Reactions

O. Material test reports.

P. Source quality-control reports.

Q. Field quality-control reports.

R. Sample warranties.

S. Maintenance Data

1.4 QUALITY ASSURANCE

A. Manufacturer Qualifications: A qualified manufacturer.
1. Accreditation: Manufacturer's facility accredited according to the International Accreditation Service's AC472, "Accreditation Criteria for Inspection Programs for Manufacturers of Metal Building Systems."
2. Engineering Responsibility: Preparation of comprehensive engineering analysis and Shop Drawings by a professional engineer who is legally qualified to practice in jurisdiction where Project is located.

B. Erector Qualifications: An experienced erector who specializes in erecting and installing work similar in material, design, and extent to that indicated for this Project and who is acceptable to manufacturer.

C. Welding Qualifications: Qualify procedures and personnel according to the following:
1. AWS D1.1/D1.1M, "Structural Welding Code - Steel."
2. AWS D1.3, "Structural Welding Code - Sheet Steel."

1.5 WARRANTY

A. The manufacturer shall warrant the equipment to be of quality construction, free from defects in materials and workmanship. The warranty shall become effective upon acceptance of the project by the Owner (after completion of final inspection.)

B. The equipment, apparatus, and parts furnished shall be warranted from a period of one (1) year, excepting only those items that are normally consumed in service, such as oil,

grease, gaskets, o-rings, etc. The manufacturer shall be solely responsible for the warranty of the equipment and all components.

C. Upon request from the Engineer and/or the Owner, the manufacturer shall demonstrate proof of financial responsibility with respect to performance and delivery date. In addition, the manufacturer shall provide proof of evidence of facilities, equipment, and skills required to produce the equipment specified herein and provide technical service and replacement parts.

D. Components failing to perform as specified by the Engineer, or as represented by the manufacturer, or proven defective in service during the warranty period, shall be replaced, repaired, or satisfactorily modified by the manufacturer without cost of kind to the Owner.

E. It is not intended the manufacturer assume liability for consequential damages or contingent liabilities arising out of failure of any product or parts thereof to operate properly, however caused by or resulting from or arising out of defects in design or manufacture, delays in delivery, replacement, or otherwise.

F. Special Warranty on Metal Panel Finishes: Manufacturer agrees to repair finish or replace metal panels that show evidence of deterioration of factory-applied finishes within specified warranty period.
   1. Finish Warranty Period: 25 years from date of Substantial Completion.

G. Special Weathertightness Warranty for Standing-Seam Metal Roof Panels: Manufacturer agrees to repair or replace standing-seam metal roof panel assemblies that leak or otherwise fail to remain weathertight within specified warranty period.
   1. Warranty Period: 20 years from date of Substantial Completion.

PART 2 PRODUCTS

2.1 PERFORMANCE REQUIREMENTS

A. Delegated Design: Engage a qualified professional engineer to design metal building system.

B. Structural Performance: Metal building systems shall withstand the effects of gravity loads and the following loads and stresses within limits and under conditions indicated according to procedures in MBMA's "Metal Building Systems Manual."
   1. The structural steel building frame is an engineered system designed, manufactured and erected by the metal building contractor. The drawings, details and dimensions shown on the drawings are representative of the Field Engineer's requirements for the appearance of the final product. The foundation drawings are indicative of the expected loadings transmitted by this system. The metal building manufacturer is allowed to adjust the sizes and shapes to design the most efficient system for their product within these guidelines. Changes must be approved by the Field Engineer in writing. No additional compensation will be allowed for changes. The foundations are designed for pinned bases.
   2. Design Loads: As indicated on Drawings, ASCE 7-16 where not indicated on the drawings.

3. Deflection and Drift Limits: Design metal building system assemblies to withstand serviceability design loads without exceeding deflections and drift limits recommended in AISC Steel Design Guide No. 3 "Serviceability Design Considerations for Steel Buildings."
4. Deflection and Drift Limits: No greater than the following:
    a. Purlins and Rafters: Vertical deflection of 1/240 of the span.
    b. Girts: Horizontal deflection of 1/240 of the span.
    c. Metal Roof Panels: Vertical deflection of 1/240 of the span.
    d. Metal Wall Panels: Horizontal deflection of 1/240 of the span.
    e. Design secondary-framing system to accommodate deflection of primary framing and construction tolerances, and to maintain clearances at openings.
    f. Lateral Drift: Maximum of 1/200 of the building height.

C. Seismic Performance: Metal building system shall withstand the effects of earthquake motions determined according to ASCE/SEI 7.

D. Thermal Movements: Allow for thermal movements from ambient and surface temperature changes by preventing buckling, opening of joints, overstressing of components, failure of joint sealants, failure of connections, and other detrimental effects. Base calculations on surface temperatures of materials due to both solar heat gain and nighttime-sky heat loss.
1. Temperature Change: 120 deg F, ambient; 180 deg F, material surfaces.

E. Structural Performance for Metal Roof and Wall Panels: Provide metal panel systems capable of withstanding the effects of the following loads, based on testing according to ASTM E1592:
1. Wind Loads: As indicated on Drawings or latest edition on IBS Code, whichever is more restrictive.

F. Air Infiltration for Metal Roof Panels: Air leakage of not more than 0.06 cfm/sq. ft. when tested according to ASTM E1680 at the following test-pressure difference:
1. Test-Pressure Difference: 6.24 lbf/sq. ft..

G. Air Infiltration for Metal Wall Panels: Air leakage of not more than 0.06 cfm/sq. ft. when tested according to ASTM E283 at the following test-pressure difference:
1. Test-Pressure Difference: 6.24 lbf/sq. ft..

H. Water Penetration for Metal Roof Panels: No water penetration when tested according to ASTM E1646[or ASTM E331] at the following test-pressure difference:
1. Test-Pressure Difference: 6.24 lbf/sq. ft..

I. Water Penetration for Metal Wall Panels: No water penetration when tested according to ASTM E331 at the following test-pressure difference:
1. Test-Pressure Difference: 6.24 lbf/sq. ft..

J. Wind-Uplift Resistance: Provide metal roof panel assemblies that comply with UL 580 for wind-uplift-resistance class indicated.
1. Uplift Rating: UL 60.

K. Energy Star Listing: Roof panels that are listed on the DOE's ENERGY STAR "Roof Products Qualified Product List" for slope roof products.

L. Energy Performance: Provide roof panels according to one of the following when tested according to CRRC-1:
   1. Three-year, aged, solar reflectance of not less than 0.55 and emissivity of not less than 0.75.
   2. Three-year, aged, Solar Reflectance Index of not less than 64 when calculated according to ASTM E1980.

2.2 STRUCTURAL-STEEL FRAMING

A. All structural steel framing components not having an applied coating are to be hot-dipped galvanized.

B. Structural Steel: Comply with AISC 360, "Specification for Structural Steel Buildings."

C. Bolted Connections: Comply with RCSC's "Specification for Structural Joints Using High-Strength Bolts."

D. Cold-Formed Steel: Comply with AISI's "North American Specification for the Design of Cold-Formed Steel Structural Members" for design requirements and allowable stresses.

E. Primary Framing: Manufacturer's standard primary-framing system, designed to withstand required loads and specified requirements. Primary framing includes transverse and lean-to frames; rafters and rake beams; sidewall, intermediate, end-wall, and corner columns; and wind bracing.
   1. General: Provide frames with attachment plates, bearing plates, and splice members. Factory drill for field-bolted assembly. Provide frame span and spacing indicated.
      a. Slight variations in span and spacing may be acceptable if necessary to comply with manufacturer's standard, as approved by Architect.

F. End-Wall Framing: Manufacturer's standard primary end-wall framing fabricated for field-bolted assembly to comply with the following:

G. Secondary Framing: Manufacturer's standard secondary framing, including purlins, girts, eave struts, flange bracing, base members, gable angles, clips, headers, jambs, and other miscellaneous structural members. Unless otherwise indicated, fabricate framing from either cold-formed, structural-steel sheet or roll-formed, metallic-coated steel sheet, prepainted with coil coating, to comply with the following:

H. Anchor Rods: Headed anchor rods as indicated in Anchor Rod Plan for attachment of metal building to foundation.

2.3 METAL ROOF PANELS

A. Standing-Seam, Metal Roof Panels. Formed with interlocking ribs at panel edges designed for sequential installation by mechanically attaching panels to supports using concealed clips located under one side of panels and engaging opposite edge of adjacent panels.
   1. Material: Aluminum-zinc alloy-coated steel sheet, 0.030-inch nominal uncoated steel thickness. Prepainted by the coil-coating process to comply with ASTM A755/A755M.
      a. Exterior Finish: Three-coat fluoropolymer

b. Color: As selected by from manufacturer's full range.
2. Clips: Two-piece floating to accommodate thermal movement.
3. Joint Type: Mechanically seamed
4. Panel Coverage: 24 inches
5. Panel Height: 3 inches

B. Exposed Fastener, Tapered-Rib, Metal Roof Panels; Formed with raised, trapezoidal major ribs and intermediate stiffening ribs symmetrically spaced between major ribs; designed to be installed by lapping side edges of adjacent panels and mechanically attaching panels to supports using exposed fasteners in side laps.
1. Material: Aluminum-zinc alloy-coated steel sheet, 0.030-inch nominal uncoated steel thickness. Prepainted by the coil-coating process to comply with ASTM A755/A755M.
a. Exterior Finish: Three-coat fluoropolymer
b. Color: As selected from manufacturer's full range
2. Panel Coverage: 36 inches.

2.4 METAL WALL PANELS

A. Concealed-Fastener, Flush-Profile, Metal Wall Panels: Formed with vertical panel edges and a single wide recess, centered between panel edges with flush joint between panels; with 1-inch-wide flange for attaching interior finish; designed to be installed by lapping and interconnecting side edges of adjacent panels and mechanically attaching through panel to supports using concealed fasteners and factory-applied sealant in side laps.

B. Material: Aluminum-zinc alloy-coated steel sheet, 0.030-inch nominal uncoated steel thickness. Prepainted by the coil-coating process to comply with ASTM A755/A755M.

C. Exterior Finish: Fluoropolymer.

D. Color: As selected from manufacturer's full range.

E. Panel Coverage: 16 inches

2.5 ACCESSORIES

A. General: Provide accessories as standard with metal building system manufacturer and as specified. Fabricate and finish accessories at the factory to greatest extent possible, by manufacturer's standard procedures and processes. Comply with indicated profiles and with dimensional and structural requirements.
1. Form exposed sheet metal accessories that are without excessive oil-canning, buckling, and tool marks and that are true to line and levels indicated, with exposed edges folded back to form hems.

B. Roof Panel Accessories: Provide components required for a complete metal roof panel assembly including copings, fasciae, corner units, ridge closures, clips, sealants, gaskets, fillers, closure strips, and similar items. Match material and finish of metal roof panels unless otherwise indicated.

C. Wall Panel Accessories: Provide components required for a complete metal wall panel assembly including copings, fasciae, mullions, sills, corner units, clips, sealants, gaskets,

fillers, closure strips, and similar items. Match material and finish of metal wall panels unless otherwise indicated.

D. Flashing and Trim: Aluminum-zinc alloy-coated steel sheet, 0.018-inch nominal uncoated steel thickness, prepainted with coil coating; finished to match adjacent metal panels.

E. Gutters: Aluminum-zinc alloy-coated steel sheet, 0.018-inch nominal uncoated steel thickness, prepainted with coil coating; finished to match roof fascia and rake trim. Match profile of gable trim, complete with end pieces, outlet tubes, and other special pieces as required. Fabricate in minimum 96-inch-long sections, sized according to SMACNA's "Architectural Sheet Metal Manual."
1. Gutter Supports: Fabricated from same material and finish as gutters.
2. Strainers: Bronze, copper, or aluminum wire ball type at outlets.

F. Downspouts: Zinc-coated (galvanized) or aluminum-zinc alloy-coated steel sheet, 0.018-inch nominal uncoated steel thickness, prepainted with coil coating; finished to match metal wall panels. Fabricate in minimum 10-foot-long sections, complete with formed elbows and offsets.
1. Mounting Straps: Fabricated from same material and finish as gutters.

G. Roof Ventilators: Gravity type, complete with hardware, flashing, closures, and fittings.
1. Continuous: Factory-engineered and -fabricated, continuous unit; aluminum-zinc alloy-coated steel sheet, 0.018-inch nominal uncoated steel thickness, prepainted with coil coating; finished to match metal roof panels. Fabricated in minimum 10-foot-long sections. Provide throat size and total length indicated, complete with side baffles, ventilator assembly, end caps, splice plates, and reinforcing diaphragms.
a. Bird Screening: Galvanized steel, 1/2-inch-square mesh, 0.041-inch wire; or aluminum, 1/2-inch-square mesh, 0.063-inch wire.
b. Dampers: Manually operated, spring-loaded, vertically rising type; chain and worm gear operator; with pull chain of length required to reach within 36 inches of floor.
c. Throat Size: [9 inches] [or] [12 inches], [as standard with manufacturer, and as required to comply with ventilation requirements].

H. Roof Curbs: Zinc-coated (galvanized) or aluminum-zinc alloy-coated steel sheet, 0.048-inch nominal uncoated steel thickness prepainted with coil coating; finished to match metal roof panels; with welded top box and bottom skirt, and integral full-length cricket; capable of withstanding loads of size and height indicated.

I. Pipe Flashing: Premolded, EPDM pipe collar with flexible aluminum ring bonded to base.

2.6 FABRICATION

A. General: Design components and field connections required for erection to permit easy assembly.
1. Mark each piece and part of the assembly to correspond with previously prepared erection drawings, diagrams, and instruction manuals.
2. Fabricate structural framing to produce clean, smooth cuts and bends. Punch holes of proper size, shape, and location. Members shall be free of cracks, tears, and ruptures.

B. Tolerances: Comply with MBMA's "Metal Building Systems Manual" for fabrication and erection tolerances.

C. Primary Framing: Shop fabricate framing components to indicated size and section, with baseplates, bearing plates, stiffeners, and other items required for erection welded into place. Cut, form, punch, drill, and weld framing for bolted field assembly.

D. Secondary Framing: Shop fabricate framing components to indicated size and section by roll forming or break forming, with baseplates, bearing plates, stiffeners, and other plates required for erection welded into place. Cut, form, punch, drill, and weld secondary framing for bolted field connections to primary framing.

E. Metal Panels: Fabricate and finish metal panels at the factory to greatest extent possible, by manufacturer's standard procedures and processes, as necessary to fulfill indicated performance requirements. Comply with indicated profiles and with dimensional and structural requirements.

F. Provide panel profile, including major ribs and intermediate stiffening ribs, if any, for full length of metal panel.

2.7 SOURCE QUALITY CONTROL

A. Special Inspection: Owner will engage a qualified special inspector to perform source quality control inspections and to submit reports.
1. Accredited Manufacturers: Special inspections will not be required if fabrication is performed by an IAS AC472-accredited manufacturer approved by authorities having jurisdiction to perform such Work without special inspection.

B. Product will be considered defective if it does not pass tests and inspections.

C. Prepare test and inspection reports.

PART 3 EXECUTION

3.1 ERECTION OF STRUCTURAL FRAMING

A. Erect metal building system according to manufacturer's written instructions and drawings.

B. Do not field cut, drill, or alter structural members without written approval from metal building system manufacturer's professional engineer.

C. Set structural framing accurately in locations and to elevations indicated, according to AISC specifications referenced in this Section. Maintain structural stability of frame during erection.

D. Base and Bearing Plates: Clean concrete- and masonry-bearing surfaces of bond-reducing materials, and roughen surfaces prior to setting plates. Clean bottom surface of plates.
1. Set plates for structural members on wedges, shims, or setting nuts as required.

2. Tighten anchor rods after supported members have been positioned and plumbed. Do not remove wedges or shims but, if protruding, cut off flush with edge of plate before packing with grout.
3. Promptly pack grout solidly between bearing surfaces and plates so no voids remain. Neatly finish exposed surfaces; protect grout and allow to cure. Comply with manufacturer's written installation instructions for shrinkage-resistant grouts.

E. Align and adjust structural framing before permanently fastening. Before assembly, clean bearing surfaces and other surfaces that will be in permanent contact with framing. Perform necessary adjustments to compensate for discrepancies in elevations and alignment.
1. Level and plumb individual members of structure.
2. Make allowances for difference between temperature at time of erection and mean temperature when structure will be completed and in service.

F. Primary Framing and End Walls: Erect framing level, plumb, rigid, secure, and true to line. Level baseplates to a true even plane with full bearing to supporting structures, set with double-nutted anchor bolts. Use grout to obtain uniform bearing and to maintain a level base-line elevation. Moist-cure grout for not less than seven days after placement.
1. Make field connections using high-strength bolts installed according to RCSC's "Specification for Structural Joints Using High-Strength Bolts" for bolt type and joint type specified.
a. Joint Type: Snug tightened or pretensioned as required by manufacturer.

G. Secondary Framing: Erect framing level, plumb, rigid, secure, and true to line. Field bolt secondary framing to clips attached to primary framing.
1. Provide rake or gable purlins with tight-fitting closure channels and fasciae.
2. Locate and space wall girts to suit openings such as doors and windows.
3. Provide supplemental framing at entire perimeter of openings, including doors, windows, ventilators, and other penetrations of roof and walls.

H. Steel Joists: Install joists and accessories plumb, square, and true to line; securely fasten to supporting construction according to SJI's "Standard Specifications and Load Tables for Steel Joists and Joist Girders," joist manufacturer's written instructions, and requirements in this Section.
1. Before installation, splice joists delivered to Project site in more than one piece.
2. Space, adjust, and align joists accurately in location before permanently fastening.
3. Install temporary bracing and erection bridging, connections, and anchors to ensure that joists are stabilized during construction.
4. Joist Installation: Bolt joists to supporting steel framework using carbon-steel bolts unless otherwise indicated.
5. Joist Installation: Bolt joists to supporting steel framework using high-strength structural bolts unless otherwise indicated. Comply with RCSC's "Specification for Structural Joints Using High-Strength Bolts" for high-strength structural bolt installation and tightening requirements.
6. Joist Installation: Weld joist seats to supporting steel framework.
7. Install and connect bridging concurrently with joist erection, before construction loads are applied. Anchor ends of bridging lines at top and bottom chords if terminating at walls or beams.

I. Bracing: Install bracing in roof and sidewalls where indicated on erection drawings.

1. Tighten rod and cable bracing to avoid sag.
2. Locate interior end-bay bracing only where indicated.

J. Framing for Openings: Provide shapes of proper design and size to reinforce openings and to carry loads and vibrations imposed, including equipment furnished under mechanical and electrical work. Securely attach to structural framing.

K. Erection Tolerances: Maintain erection tolerances of structural framing within AISC 303.

3.2 METAL PANEL INSTALLATION, GENERAL

A. General: Anchor metal panels and other components of the Work securely in place, with provisions for thermal and structural movement.
1. Field cut metal panels as required for doors, windows, and other openings. Cut openings as small as possible, neatly to size required, and without damage to adjacent metal panel finishes.
a. Field cutting of metal panels by torch is not permitted unless approved in writing by manufacturer.
2. Install metal panels perpendicular to structural supports unless otherwise indicated.
3. Flash and seal metal panels with weather closures at perimeter of openings and similar elements. Fasten with self-tapping screws.
4. Locate and space fastenings in uniform vertical and horizontal alignment.
5. Locate metal panel splices over structural supports with end laps in alignment.
6. Lap metal flashing over metal panels to allow moisture to run over and off the material.

B. Lap-Seam Metal Panels: Install screw fasteners using power tools with controlled torque adjusted to compress EPDM washers tightly without damage to washers, screw threads, or metal panels. Install screws in predrilled holes.
1. Arrange and nest side-lap joints so prevailing winds blow over, not into, lapped joints. Lap ribbed or fluted sheets one full rib corrugation. Apply metal panels and associated items for neat and weathertight enclosure. Avoid "panel creep" or application not true to line.

C. Metal Protection: Where dissimilar metals contact each other or corrosive substrates, protect against galvanic action by painting contact surfaces with corrosion-resistant coating, by applying rubberized-asphalt underlayment to each contact surface, or by other permanent separation as recommended by metal roof panel manufacturer.

D. Joint Sealers: Install gaskets, joint fillers, and sealants where indicated and where required for weatherproof performance of metal panel assemblies. Provide types of gaskets, fillers, and sealants indicated; or, if not indicated, provide types recommended by metal panel manufacturer.
a. Seal metal panel end laps with double beads of tape or sealant the full width of panel. Seal side joints where recommended by metal panel manufacturer.

E. Prepare joints and apply sealants to comply with requirements in Section 079200 "Joint Sealants."

3.3 METAL ROOF PANEL INSTALLATION

A. General: Provide metal roof panels of full length from eave to ridge unless otherwise indicated or restricted by shipping limitations.
   1. Install ridge caps as metal roof panel work proceeds.
   2. Flash and seal metal roof panels with weather closures at eaves and rakes. Fasten with self-tapping screws.

B. Standing-Seam Metal Roof Panels: Fasten metal roof panels to supports with concealed clips at each standing-seam joint, at location and spacing and with fasteners recommended by manufacturer.
   1. Install clips to supports with self-drilling or self-tapping fasteners.
   2. Install pressure plates at locations indicated in manufacturer's written installation instructions.
   3. Snap Joint: Nest standing seams and fasten together by interlocking and completely engaging factory-applied sealant.
   4. Seamed Joint: Crimp standing seams with manufacturer-approved motorized seamer tool so that clip, metal roof panel, and factory-applied sealant are completely engaged.
   5. Rigidly fasten eave end of metal roof panels and allow ridge end free movement for thermal expansion and contraction. Predrill panels for fasteners.
   6. Provide metal closures at peaks, rake edges, rake walls and each side of ridge and hip caps.

C. Lap-Seam Metal Roof Panels: Fasten metal roof panels to supports with exposed fasteners at each lapped joint, at location and spacing recommended by manufacturer.
   1. Provide metal-backed sealing washers under heads of exposed fasteners bearing on weather side of metal roof panels.
   2. Provide sealant tape at lapped joints of metal roof panels and between panels and protruding equipment, vents, and accessories.
   3. Apply a continuous ribbon of sealant tape to weather-side surface of fastenings on end laps and on side laps of nesting-type metal panels, on side laps of ribbed or fluted metal panels, and elsewhere as needed to make metal panels weatherproof to driving rains.
   4. At metal panel splices, nest panels with minimum 6-inch end lap, sealed with butyl-rubber sealant and fastened together by interlocking clamping plates.

D. Metal Fascia Panels: Align bottom of metal panels and fasten with blind rivets, bolts, or self-drilling or self-tapping screws. Flash and seal metal panels with weather closures where fasciae meet soffits, along lower panel edges, and at perimeter of all openings.

3.4 METAL WALL PANEL INSTALLATION

A. General: Install metal wall panels in orientation, sizes, and locations indicated on Drawings. Install panels perpendicular to girts, extending full height of building, unless otherwise indicated. Anchor metal wall panels and other components of the Work securely in place, with provisions for thermal and structural movement.
   1. Unless otherwise indicated, begin metal panel installation at corners with center of rib lined up with line of framing.
   2. Shim or otherwise plumb substrates receiving metal wall panels.
   3. When two rows of metal panels are required, lap panels 4 inches minimum.

4. When building height requires two rows of metal panels at gable ends, align lap of gable panels over metal wall panels at eave height.
5. Rigidly fasten base end of metal wall panels and allow eave end free movement for thermal expansion and contraction. Predrill panels.
6. Flash and seal metal wall panels with weather closures at eaves and rakes, and at perimeter of all openings. Fasten with self-tapping screws.
7. Install screw fasteners in predrilled holes.
8. Install flashing and trim as metal wall panel work proceeds.
9. Apply elastomeric sealant continuously between metal base channel (sill angle) and concrete, and elsewhere as indicated on Drawings; if not indicated, as necessary for waterproofing.
10. Align bottom of metal wall panels and fasten with blind rivets, bolts, or self-drilling or self-tapping screws.
11. Provide weatherproof escutcheons for pipe and conduit penetrating exterior walls.

B. Metal Wall Panels: Install metal wall panels on exterior side of girts. Attach metal wall panels to supports with fasteners as recommended by manufacturer.

3.5 ACCESSORY INSTALLATION

A. General: Install accessories with positive anchorage to building and weathertight mounting, and provide for thermal expansion. Coordinate installation with flashings and other components.
1. Install components required for a complete metal roof panel assembly, including trim, copings, ridge closures, seam covers, flashings, sealants, gaskets, fillers, closure strips, and similar items.
2. Install components for a complete metal wall panel assembly, including trim, copings, corners, seam covers, flashings, sealants, gaskets, fillers, closure strips, and similar items.
3. Where dissimilar metals contact each other or corrosive substrates, protect against galvanic action by painting contact surfaces with corrosion-resistant coating, by applying rubberized-asphalt underlayment to each contact surface, or by other permanent separation as recommended by manufacturer.

B. Flashing and Trim: Comply with performance requirements, manufacturer's written installation instructions, and SMACNA's "Architectural Sheet Metal Manual." Provide concealed fasteners where possible, and set units true to line and level. Install work with laps, joints, and seams that will be permanently watertight and weather resistant.
1. Install exposed flashing and trim that is without excessive oil-canning, buckling, and tool marks and that is true to line and levels indicated, with exposed edges folded back to form hems. Install sheet metal flashing and trim to fit substrates and to result in waterproof and weather-resistant performance.
2. Expansion Provisions: Provide for thermal expansion of exposed flashing and trim. Space movement joints at a maximum of 10 feet with no joints allowed within 24 inches of corner or intersection. Where lapped or bayonet-type expansion provisions cannot be used or would not be sufficiently weather resistant and waterproof, form expansion joints of intermeshing hooked flanges, not less than 1 inch deep, filled with mastic sealant (concealed within joints).

C. Gutters: Join sections with riveted-and-soldered or lapped-and-sealed joints. Attach gutters to eave with gutter hangers spaced as required for gutter size, but not more than 36 inches

o.c. using manufacturer's standard fasteners. Provide end closures and seal watertight with sealant. Provide for thermal expansion.

D. Downspouts: Join sections with 1-1/2-inch telescoping joints. Provide fasteners designed to hold downspouts securely 1 inch away from walls; locate fasteners at top and bottom and at approximately 60 inches o.c. in between.
   1. Provide elbows at base of downspouts to direct water away from building.
   2. Tie downspouts to underground drainage system indicated.

E. Circular Roof Ventilators: Set ventilators complete with necessary hardware, anchors, dampers, weather guards, rain caps, and equipment supports. Mount ventilators on flat level base. Install preformed filler strips at base to seal ventilator to metal roof panels.

F. Continuous Roof Ventilators: Set ventilators complete with necessary hardware, anchors, dampers, weather guards, rain caps, and equipment supports. Join sections with splice plates and end-cap skirt assemblies where required to achieve indicated length. Install preformed filler strips at base to seal ventilator to metal roof panels.

G. Pipe Flashing: Form flashing around pipe penetration and metal roof panels. Fasten and seal to panel as recommended by manufacturer.

3.6 FIELD QUALITY CONTROL

A. Special Inspections: Engage a qualified special inspector to perform field quality control special inspections and to submit reports.

B. Product will be considered defective if it does not pass tests and inspections.

C. Prepare test and inspection reports.

END OF SECTION

SHAWNEE MUNICIPAL AUTHORITY

WASTEWATER SYSTEM IMPROVEMENTS

CONTRACT DOCUMENTS & SPECIFICATIONS
VOLUME 3 OF 8
DIVISION 23 TO DIVISION 28

IN COOPERATION WITH

OKLAHOMA WATER RESOURCES BOARD

OWRB PROJECT # ORF-20-0018-CWA

ISSUED FOR BIDDING

City of Shawnee
OKLAHOMA

WALL ENGINEERING

Wall Engineering Project # SHN-20-01
WE Firm Certificate of Authorization #5413

THIS PAGE INTENTIONALLY LEFT BLANK FOR DOUBLE SIDED PRINTING

SHAWNEE MUNICIPAL AUTHORITY
WASTEWATER SYSTEM IMPROVEMENTS

ISSUED: FOR CONSTRUCTION

June 2022

The seal below covers the following sections of the Contract Documents:

Division 0, Division 1, Division 2, Division 3, Division 5, Division 9, Division 10, Division 13, Division 31, Division 32, Division 33, Division 40, Division 41, Division 43, Division 46, Division 47



THIS PAGE INTENTIONALLY LEFT BLANK FOR DOUBLE SIDED PRINTING

SHAWNEE MUNICIPAL AUTHORITY
WASTEWATER SYSTEM IMPROVEMENTS

ISSUED: FOR CONSTRUCTION

June 2022

The seal below covers the following sections of the Contract Documents:

Division 26, Division 27, Division 28



THIS PAGE INTENTIONALLY LEFT BLANK FOR DOUBLE SIDED PRINTING

SHAWNEE MUNICIPAL AUTHORITY
WASTEWATER SYSTEM IMPROVEMENTS

ISSUED: FOR CONSTRUCTION

JUNE 2022

The seal below covers the following sections of the Contract Documents:

Division 23



THIS PAGE INTENTIONALLY LEFT BLANK FOR DOUBLE SIDED PRINTING

CONTRACT DOCUMENTS
TABLE OF CONTENTS

VOLUME 1 OF 8

DIVISION 00 – PROCUREMENT AND CONTRACTING DOCUMENTS

00_01_01.01	Project Title Page
00_01_07.01	Seals Page, Civil
00_01_07.02	Seals Page, Electrical
00_01_07.03	Seals Page, Mechanical
00_01_10	Table of Contents
00_01_19	Prequalified Contractors
00_01_21	Requirements for Bidders

PROCUREMENT REQUIREMENTS

00_11_13	Advertisement for Bids
00_21_13	Instruction to Bidders
00_41_13	Bid Form
00_41_13	Bid Form - Attachment "A" - Bid Summary Sheet
00_41_16	List of Manufacturers
00_41_19	List of Subcontractors
00_41_16	List of Manufacturers
00_41_19	List of Subcontractors
00_41_22	Special Materials Cost Increases
00_43_13	Bid Security Form
00_45_19.13	Noncollusion Affidavit
00_45_21	Business Relationship Affidavit
00_45_17.13	Payroll Affidavit

OWRB CWSRF SPECIAL PROCUREMENT & PROJECT REQUIREMENTS

00_46_47.39	Certification of Labor Standards
00_46_47.19	DBE Guidance
00_46_47.23	DBE Subcontractor Participation Form
00_46_47.26	DBE Subcontractor Performance Form
00_46_47.29	DBE Subcontractor Utilization Form
00_46_47.33	American Iron & Steel Certification
00_46_47.36	Bidder Statements
00_46_47.39	Wage Rates – Building
00_46_47.41	Wage Rates – Heavy

CONTRACTING REQUIREMENTS

00_51_00	Notice of Award
00_52_13	Agreement - Stipulated Price
00_55_00	Notice to Proceed

PROJECT FORMS

00_61_13.13	Performance Bond Form
00_61_13.16	Payment Bond Form
00_61_20	Maintenance Bond Form
00_62_16	Certificate of Insurance
00_62_76	Application for Payment Form
00_62_76.13	Invoice Affidavit Form

THIS PAGE INTENTIONALLY LEFT BLANK FOR DOUBLE SIDED PRINTING

CONTRACT DOCUMENTS
TABLE OF CONTENTS

00_63_13 Request for Information
00_63_36 Field Order Form
00_63_49 Work Change Directive Form
00_63_63 Change Order Form
00_63_67 Attorney Certificate of Approval
00_65_16 Substantial Completion Form
00_65_19.24 Acceptability of Work Form
00_65_19.29 Release of Claimants Form
00_65_19.32 Property Owner Release Form

CONDITIONS OF THE CONTRACT
00_72_13 General Conditions - Stipulated Sum
00_73_00 Supplementary Conditions
00_73_02 OWRB Supplemental Conditions

VOLUME 2 OF 8

DIVISION 01 – GENERAL REQUIREMENTS
01_00_01 Basic Requirements
01_11_01 Sequence of Construction
01_29_00 Payment Procedures
01_32_34 Photographic & Video Log
01_33_01 General Submittal Requirements
01_33_02 Pre-Bid Equipment Submittal Requirements
01_36_00 Pipe Laying Prove-out
01_43_24 System Integrator Prequalification
01_45_24 Special Tests & Inspections
01_45_29 Testing Laboratory Services
01_56_17 Dust Control
01_75_23 Testing, Training & Facility Startup
01_78_23 Operation and Maintenance Data
01_78_34 Warranties and Bonds
01_91_01 Facility Commissioning

DIVISION 02 – EXISTING CONDITIONS
02_21_20 Subsurface Utility Engineering
02_30_00 Subsurface Investigation
02_41_00 Demolition

DIVISION 03 – CONCRETE
03_11_00 Concrete Formwork
03_15_20 Concrete Joints & Embedded Items
03_20_00 Concrete Reinforcement
03_21_18 Epoxy Bonding in Concrete
03_30_00 Cast-in-place Concrete
03_35_00 Concrete Finishes
03_60_00 Grouting
03_60_01 Basin Bottom Grout
03_70_00 Mass Concrete

THIS PAGE INTENTIONALLY LEFT BLANK FOR DOUBLE SIDED PRINTING

CONTRACT DOCUMENTS
TABLE OF CONTENTS

DIVISION 05 – METALS
05_05_20 Anchorages
05_05_25 Mechanical Anchoring
05_50_00.01 Miscellaneous Metal Fabrications
05_51_00.13 Metal Ladders, Platforms & Stairs
05_52_00 Metal Railings
05_53_00.13 Metal Grates & Cover Plates

DIVISION 9 – FINISHES
09_91_00.13 Painting of Treatment Plants

DIVISION 10 - SPECIALTIES
10_44_16 Fire Extinguishers

DIVISION 13 – SPECIAL CONSTRUCTION
13_34_19 Metal Building Systems

VOLUME 3 OF 8

DIVISION 23 – HEATING, VENTILATING & AIR CONDITIONING (HVAC)
23_00_00 Mechanical General Requirements

DIVISION 26 – ELECTRICAL
26_05_00 Common Work Results for Electrical
26_05_20 Hazardous Classified Area Construction
26_06_00 Grounding & Bonding
26_07_00 Hangers & Supports
26_07_50 Identification for Electrical Systems
26_12_30 600-Volt or Less Wires & Cables
26_12_50 Fiber Optic Cable & Appurtenances
26_13_00 Conduits
26_13_30 Duct Banks
26_13_40 Boxes
26_13_60 Wireway
26_14_00 Wiring Devices
26_15_00 Low Voltage Wire Connections
26_21_00 Utility Coordination
26_26_20 Variable Frequency Drives 0.50-50 Horsepower
26_26_50 Reduced Harmonic Variable Frequency Drives
26_27_20 Dry-Type Transformers
26_28_50 Surge Protection Devices
26_29_00 Electrical Power Monitoring
26_30_50 Electrical System Studies
26_31_21.50 600KW Generator
26_32_13.60 200A Automatic Transfer Switch
26_32_13.10 15KW Generator
26_32_13.20 1750KW Generator
26_32_13.30 150A ATS

THIS PAGE INTENTIONALLY LEFT BLANK FOR DOUBLE SIDED PRINTING

CONTRACT DOCUMENTS
TABLE OF CONTENTS

26_32_13.40 4000A ATS
26_41_10 Disconnect Switches
26_41_20 Low Voltage Molded Case Circuit Breakers
26_41_30 Low Voltage Insulated Case Circuit Breakers
26_42_20 Motor Starters
26_44_10 Group Mounted Circuit Breaker Switchboards
26_44_50 Panelboards
26_47_20 Package Power Supply Center
25_51_00 Lighting LED Luminaires
26_67_00 Lighting Protection
26_95_00 Field Electrical Acceptance Tests

DIVISION 27 – PROCESS CONTROL & INSTRUMENTATION SYSTEMS
27_05_00 Common Work Results for Process Control & Instrumentation Systems
27_10_00 Control Strategies
27_30_60 Level Measurement Ultrasonic
27_30_20 Flow Measurement Magnetic Flowmeters
27_34_00 Analytical Devices
27_40_70 Pressure Measurement Submersible
37_60_40 Temperature Measurement RTD
27_71_00 Control Systems Panel Enclosure and Panel Components
27_72_00 Control Systems Programmable Logic Controllers
27_73_30 Control Systems Network Materials & Equipment
27_73_31 Computer System Hardware
27_73_32 HMI System Software
27_95_00 Commissioning for Instrumentation & Controls

DIVISION 28 – ELECTRONIC SAFETY & SECURITY
28_21_01 CCTV Monitoring System

VOLUME 4 OF 8

DIVISION 31 – EARTHWORK
31_00_00 Earthwork
31_05_19 Geosynthetics for Earthwork
31_23_23.33 Flowable Fill
31_23_34 Utility Earthwork & Backfill
31_25_00 Erosion Control
31_41_33 Trench Shielding

DIVISION 32 – EXTERIOR IMPROVEMENTS
32_31_13 Chainlink Fences and Gates
32_92_00 Turf and Grasses

DIVISION 33 – UTILITIES
33_01_30.90 Bypass Pumping of Sewer Systems
33_01_33 Wastewater Liquid & Sludge Removal & Disposal
33_05_05.17 Mechanical Joint Restraint
33_05_07.13 Utility Directional Drilling

THIS PAGE INTENTIONALLY LEFT BLANK FOR DOUBLE SIDED PRINTING

CONTRACT DOCUMENTS
TABLE OF CONTENTS

33_05_07.23 Utility Boring & Jacking
33_05_09.34 Concrete Thrust Blocks & Collars
33_05_25 Steel Casing Pipe
33_05_61 Concrete Manholes
33_05_64 Precast Reinforced Concrete Vault
33_05_97.23 Underground Utility Warning Tape
33_05_97.24 Utility Locator System

DIVISION 40 – PROCESS INTERCONNECTIONS
40_05_00.13 Piping Systems Testing
40_05_06.03 Pipe Couplings
40_05_07.03 Pipe Supports
40_05_12 Piping Specialties
40_05_19.20 Ductile Iron Pipe & Fittings
40_05_23 Stainless Steel Process Pipe & Tubing
40_05_33 High Density Polyethylene (HDPE) Pipe

VOLUME 5 OF 8

40_05_57.24 Electric Actuators for Valves and Gates
40_05_58 Specialty Valves
40_05_59.23 Stainless Steel Gates
40_05_61.43 Knife Gate Valves
40_05_62.64 Butterfly & Plug Valves
40_05_66.23 Surge Relief Angle Valves
40_05_67 Gate Valves
40_05_71.23 Mud Valves
40_41_13.01 Insulation and Heat Tracing
40_71_84 Parshall Flumes
40_75_43 Dissolved Oxygen Sensors

DIVISION 41 – MATERIALS PROCESSING AND HANDLING EQUIPMENT
41_21_23.15 Belt Conveyor System
41_22_00 Cranes & Hoists

DIVISION 43 – PROCESS & LIQUID HANDLING, PURIFICATION & STORAGE EQUIPMENT
43_11_16 High Efficiency Blower Packages
43_23_31.35 Non-Potable Water Pumps
43_23_58.03 Positive Displacement Rotary Lobe Pumps
43_25_13.13 Submersible Pump System

DIVISION 46 – WATER & WASTEWATER EQUIPMENT
46_05_09 Process Equipment Identification
46_05_12 Equipment General Provisions
46_07_54 Waste Activated Sludge Pump Station
46_21_53 Perforated Fine Screen
46_21_73.13 Screw Washer Compactor
46_23_24 Grit Removal, Washing & Dewatering
46_33_33 Polymer Blending & Feed Equipment

THIS PAGE INTENTIONALLY LEFT BLANK FOR DOUBLE SIDED PRINTING

CONTRACT DOCUMENTS
TABLE OF CONTENTS

46_41_23	Submersible Mixers
46_51_55	Low Profile Cascade Aerator
46_53_57	SBR & Aerobic Digester
46_66_57	UV Disinfection Equipment
46_76_21.03	Belt Filter Press System

VOLUME 6 OF 8
CONSTRUCTION DRAWINGS – NORTHSIDE WASTEWATER TREATMENT PLANT

VOLUME 7 OF 8
CONSTRUCTION DRAWINGS – SOUTHSIDE & LIFT STATIONS

VOLUME 8 OF 8
CONSTRUCTION DRAWINGS – CONVEYANCE

THIS PAGE INTENTIONALLY LEFT BLANK FOR DOUBLE SIDED PRINTING

SECTION 230000

MECHANICAL GENERAL REQUIREMENTS

A. GENERAL

1. Provide equipment, material, and labor for the heating, ventilation, air conditioning, piping, and plumbing in strict accordance with the specifications and drawings.

2. Work shall be executed and inspected in accordance with local and state codes. Obtain permits and inspections required.

3. Plumbing work shall comply with the State Plumbing Code.

4. In case of discrepancies between the plans, applicable codes, or specifications, the most stringent shall govern.

5. Should the Contractor perform any work that does not comply with requirements of applicable authorities, Contractor shall correct the deficiencies at no additional cost to the Owner.

6. It is the responsibility of the Contractor to investigate any desired substitutions for specified equipment prior to submission of his bid. The Contractor shall be responsible for any changes required in mechanical, electrical, structural, or plumbing and shall bear costs for those changes. Substitution requests will not be taken before bid date.

7. Final decision as to whether or not a specific piece of equipment meets specifications shall rest with Engineer.

8. Submit 6 copies of submittals for equipment. (Electronically or in 3 ring binders. No loose sets accepted.)

9. The Contractor shall field verify existing conditions and review and compare drawings and specifications for all disciplines to avert possible installation conflicts. Changes required in the work of the Contractor caused by his neglect to do so shall be made by him at no additional cost to the Owner.

10. Lines that pitch such as drain piping shall have the right-of-way over those that do not pitch.

11. Provide and install accessories, and incidental items to complete the work and provide complete systems ready for operation.

12. Contractor shall be responsible for required cutting and patching incidental to his work and shall make satisfactory repairs. In no case shall the Contractor cut into any major structural element, beam, or column.

13. Use of the Owner's Existing and New, Permanent HVAC System During Construction:

    a. **Use of the Owner's existing and currently being installed, permanent HVAC system during Construction is prohibited.** Provide temporary means for heating

and cooling required by construction activities for curing or drying completed installations or for protecting installed construction from adverse effects of temperature and humidity. Provide temporary dehumidification systems when required to reduce substrate moisture levels required to accommodate installation or application of finishes.

b. Maintain a minimum ambient temperature of 50 DEG. F. in areas where construction is in progress, unless indicated otherwise in the specifications.

c. Prevent dust, fumes, construction debris, and odors from entering existing and newly installed HVAC equipment, ductwork, and control system components. Prior to commencing work, isolate HVAC equipment. Where existing HVAC systems will be affected, isolate existing supply, return, and exhaust ducts by disconnecting ductwork at point where existing duct shall remain. Cover ends of existing ductwork securely with black plastic material.

d. Newly installed ductwork shall be thoroughly cleaned before installation. Each section that is installed at the end of the day shall have open ends securely covered with black plastic material.

e. Newly installed HVAC equipment shall be securely covered and protected with black plastic material or by other approved method. After installation of air moving equipment, duct connections shall be securely covered with black plastic material. Connections to duct systems shall not be made until final finishes have been installed, areas served are clean, and building is ready for HVAC equipment start-up and use.

f. Securely cover control system components to prevent damage from construction debris, dust, and dirt. Control systems shall not be energized for testing and adjusting until HVAC system start-up.

g. **HVAC Equipment, Ductwork, and Control Components contaminated by construction debris, dirt, and construction dust shall not be acceptable and shall be replaced at no additional cost to the Owner. HVAC Equipment, Ductwork, and Control components shall be kept clean throughout construction. Cleaning after an HVAC system has been contaminated shall not be an acceptable alternate to replacement.**

14. Contractor shall include adequate time in construction schedule for HVAC system start-up; testing, adjusting, and balancing; and control system installation, programming, testing, and commissioning.

15. Contractor and control system provider shall coordinate with Commissioning Agent and provide assistance as required throughout the commissioning period.

16. Equipment and materials shall be new and shall bear the manufacturer's name, trade name, and the UL label in every case where a standard has been established for the particular material. Equipment shall be the standard product of a manufacturer regularly engaged in the production of the required type of equipment, and shall be the manufacturer's latest approved design.

17. Equipment and materials of the same general type shall be of the same throughout the work to provide uniform appearance, operation, and maintenance.

18. Install sleeves for pipes and ducts that pass through floors or roof, and for pipes which pass through masonry or concrete walls or partitions. Sleeves for ducts shall be 16-gauge galvanized sheet steel.

19. Sleeves shall be large enough so that pipe and insulation can pass through freely, but not larger than necessary. Sleeves in floor slabs shall be extended 2" above the surface of the floor, whether in finished rooms, concealed spaces, chases or partitions. Sleeves in roof slab, walls, and partitions shall be flush with the finished surfaces.

20. In the exterior walls and at floor slab penetrations, the space between sleeves and pipes passing through the sleeves shall be sealed with "link-seal" sleeve seals.

21. It is the responsibility of the Contractor to investigate the job site and become familiar with the location and inverts of existing site utilities prior to submitting a bid or starting construction.

22. Excavation and Trenching: Excavate to provide three (3) foot minimum cover or greater depths as required by code to provide adequate slope and burial depth. Grade bottom of trenches to provide uniform bearing and support for each section of pipe on undisturbed soil. Provide a 4 inch thick (minimum) layer of pea gravel aggregate bedding beneath buried piping. Bedding shall be compacted and leveled to provide required sloping. Backfill trenches with excavated materials of earth, sandy clay, sand, gravel or other approved materials, free from clods of earth or stones 2 ½-inches maximum dimension, deposited in 6-inch layers and compacted to 95% standard proctor compaction test.

23. Remove waste and rubbish from the job.

24. Test and adjust phases of the work.

25. Supervise and coordinate electrical work in connection with the mechanical work.

26. Furnish motor controllers and contactors.

27. Control wiring shall be in conduit.

28. Provide access panels where shown or as required for maintenance.

29. Exposed ironwork, pipes, hangers, and miscellaneous steel without factory finish shall be prepped, primed with one coat alkyd primer, and painted with two coats alkyd enamel gloss. Color shall be black.

30. Install ducts and piping to provide the maximum possible clear height underneath.

31. Provide a redline set of record drawings at the conclusion of the project which indicate the as-installed condition. Provide final drawings to Owner.

32. Any damage to existing buildings, equipment, grounds, or product, which is the result of the Contractor's operations, shall be repaired or replaced to the Owner's satisfaction without additional cost to the Owner.

33. Provide miscellaneous supporting systems for the quipment installed.

34. Instruct the Owner's representative in the proper operation and maintenance of elements of the mechanical systems.

35. The work herein specified shall be free from defects in workmanship and material under normal use and service. If within twelve (12) months from the date of acceptance by the Owner, any of the equipment or materials, or the installation thereof, is found to be defective in workmanship or materials, it shall be replaced or repaired at no charge to the Owner.

36. Drawings are diagrammatic; therefore, offsets, fittings, valves and accessories are not shown. Plan work around building details and other crafts.

37. It is the intention that the plans and specifications shall provide a complete installation. Accessories and apparatus necessary for complete operational systems shall be included. The omission of specific reference to any part of the work necessary for such complete installation shall not be interpreted as relieving this Contractor from furnishing and installing such part.

B. ELECTRICAL REQUIREMENTS FOR MECHANICAL EQUIPMENT

1. Conduit, wiring, disconnect switches, and electrical connections for electric motors and equipment and starters for motors are specified under electrical, unless specifically furnished by Contractor. Starting switches, protective devices and other means for the operation and control of equipment shall be furnished with the mechanical equipment unless otherwise specifically noted.

2. Electrical work shall comply with the N.E.C.

3. Variable Frequency Drives shall be ABB unless otherwise noted.

C. MECHANICAL SUPPORTING SYSTEMS

1. Pipe hangers shall be equal to Grinnell, designed for the weight and installation.

2. Provide saddles on insulated pipe.

3. Hanger spacing shall be:

Pipe Size	Steel	Copper
to 3/4	7'	5'
1	7	6
1-1/4	7	7
1-1/ 2	9	8
2 to 2-1/2	10	8
3	12	10

4. Pipe hangers and supports shall conform to MSS-SP-58 and MSS-SP-69 latest editions.

5. Provide insulation inserts on insulated piping.

6. Provide copper hangers on un-insulated copper piping.

7. Provide supports at concentrated loads.

8. Furnish auxiliary steel and paint.

D. MECHANICAL VIBRATION CONTROLS

1. Provide 4-inch minimum concrete pads for floor-mounted equipment.

2. Provide concrete inertia bases for fans and pumps located above the basement or ground floor level.

3. Provide flexible connections on connections of piping and ductwork to rotating equipment.

4. Provide vibration isolation at fans and equipment with internal fans. Provide vibration isolation hangers for suspended units.

E. SEISMIC PROTECTION OF MECHANICAL EQUIPMENT

1. Comply with seismic requirements of IBC 2000/2003.

2. Manufacturer of seismic restraints shall provide submittals for products as follows:

   a. Catalog/data sheets on seismic restraints.

   b. Support, anchor, and installation details.

   c. Seismic restraint calculations stamped by registered Engineer licensed in Arkansas.

3. See specific equipment specifications for additional requirements.

F. EQUIPMENT, PIPE, AND VALVE IDENTIFICATION

1. Install pipe ID markers on plumbing, and HVAC piping.

2. Colors and descriptions shall comply with ANSI requirements.

3. Labels shall comply with OSHA standards and Owner requirements.

4. Equipment, switches, and controls shall have a laminated tag identifying the piece of equipment or the equipment the device controls.

5. Provide equipment ID for HVAC equipment.

G. MECHANICAL SYSTEMS INSULATION

1. PLUMBING

   a. Indoors: Domestic water:

      1) Run-outs: 1/2" thick F.G. with ASJ and molded fittings.

2) Mains: 1” thick, F.G. with ASJ and molded fittings, 1-1/2” thick over 2” pipe size.

3) Internal storm: 1” thick, F.G. with ASJ, and molded fittings on horizontal runs, and elbow to horizontal.

4) Sewer: 1” thick, F.G. with ASJ, and molded fittings on piping carrying condensate drainage and where subject to sweating.

5) Handicapped fixtures: insulate exposed drains and water piping.

b. Underground: Domestic water: Foamglass, 1” thick.

c. Mechanical spaces:

1) Domestic water: 1-1/2” thick, F.G. with ASJ and molded fittings. 1” thick on run-outs.

2) Storm Drain: 1-1/2” thick, F.G. with ASJ and molded fittings.

3) Sewer Lines and Traps: 1-1/2” thick, F.G. with ASJ and molded fittings.

2. HVAC PIPING

a. Hydronic piping: 2” thick F.G. with ASJ and molded fittings, 1-1/2" thick through 2" pipe size, and 2" thick for piping 2-1/2" and larger.

b. Refrigerant piping: 3/4” Armaflex AP

c. Condensate drain: 3/4” Armaflex AP

d. Provide rigid inserts at support points.

3. HVAC DUCTS

a. Duct wrap: 2" thick, F.G., 3/4 # density.

b. Semi-rigid board: 1-1/2” thick for dimensional sizes over 36” and ductwork with-in 6 feet of the finished floor. Insulate all outdoor ductwork with 1-1/2” thick semi-rigid board.

c. Insulate all ductwork except exhaust.

d. Kitchen exhaust ducts: 2” thick 3M fire barrier duct wrap 15A. Install in accordance with manufacturer’s instructions.

4. HVAC EQUIPMENT

a. Insulate chiller surfaces, chilled water pump bodies, air separator, chemical feeder, expansion tank, storage tank, and other surfaces subject to sweating with 3/4” Armaflex AP.

b. Insulate tops of ceiling supply air devices with R-6 foil-faced ductwrap.

5. Install systems of insulation in accordance with the manufacturer's instructions.

6. Generator Muffler and Tail Pipe: 2" thick Owens-Corning Kaylor calcium silicate with 0.020" aluminum insulated jacket and stainless steel bands. Fittings shall be insulated with mitered sections and finished with 1/4" thick layer of insulating cement.

7. DUCTWORK EXPOSED TO WEATHER: Cover semi-rigid finished insulation with painted, 0.24" aluminum smooth jacket. Overlap sides and edges 2" and make edges hemmed smooth. Seal laps with weatherproofing sealant. Position laps to shed water. Secure jackets in place with ½" wide metal bands on 48" centers. Extend ends of jacketing inside building penetration or equipment and finish for weatherproofing.

8. PIPE INSULATION EXPOSED TO WEATHER: Provide smooth aluminum jacket 0.016". Provide side and end laps of 2" minimum with cut edge of side lap turned under 1" for smooth edge. Seal laps with weatherproof sealant. Position laps to shed water. Secure jacket in place with bands 1/2" X 0.015" thick placed on 9" centers. Extend exterior insulation and jacketing 2" beyond sleeve inside building.

9. Maintain adequate vapor barrier on insulation covering equipment, piping, and ductwork subject to sweating. Water soaked insulation is not acceptable and shall be replaced.

H. FIRESTOPPING AND SMOKE STOPPING

1. Provide the required fire and smoke stopping for mechanical systems penetrations of the fire and smoke construction of the building.

2. Submit shop drawings and product data sheets for system components.

3. Fire and smoke stopping systems and components shall be equal to 3M.

I. BUILDING SERVICES PIPING AND SPECIALTIES BASICS

1. Provide and install a complete system of piping and valves as indicated or as necessary to completely control the entire apparatus appurtenances. The piping drawings are diagrammatic and indicate the general location and connections.

2. Open ends of pipes and equipment shall be properly capped or plugged to keep dirt and other foreign materials out of the system.

3. Contractor shall take every precaution to remove dirt, grease, and other foreign matter from each length of piping before making field connections.

4. Maintain piping clean and dry.

5. Systems shall be free of noise.

6. Piping stored on site shall be protected from damage and weather.

7. Material shall be new and undamaged.

8. Materials and methods will comply with ASME and ANSI standards.

9. Route lines parallel or perpendicular with the building.

10. Piping with grades will take precedence. Maintain piping as close as possible to the structure.

11. Plans are diagrammatic and do not indicate offsets or arrangements required.

12. Conceal pipes unless indicated otherwise.

13. Install drains at low points. Install air vents at high points.

14. Seal pipe penetrations. Provide sleeves. Seal penetrations in fire or smoke construction to maintain rating.

15. Remove scale, slag, dirt and debris for the piping.

16. Provide unions or flanges at equipment.

17. Use standard fittings for joints and bends.

18. Provide dielectric unions for dissimilar metals. Provide shut-off valve on either side for service.

19. Fittings shall match the piping materials.

20. Clean, flush, and inspect piping systems.

21. Test piping systems.

J. VALVES

1. Valves shall be equal to Milwaukee unless note otherwise.

2. Refer to specific system specifications for special valve requirements.

3. Valves for Domestic Hot and Cold Water:

   a. Gate Valves:

      1) 2 inch and Smaller: 125# SWP-200# WOG, body and bonnet of ASTM B 62 cast bronze, threaded ends, solid wedge disc, bronze stem, brass packing gland, threaded bonnet, and aluminum handwheel.

      2) 2-1/2 Inch and Larger: 125# SWP – 200# WOG, iron body and bonnet conforming to ASTM A 126 Class B, flanged ends, solid wedge disc, bolted bonnet, cast iron handwheel, and brass packing gland.

   b. Ball Valves: Valves 2 Inch and Smaller: 150# SWP – 400# WOG, threaded ends, 3-piece construction, bronze body conforming to ASTM B 62, full port, chrome-plated brass ball, replaceable PTFE seats and seals, blowout proof stem, and vinyl-covered steel handle; Milwaukee BA-300 or equal. For valves subject to sweating, provide insulated handle equal to Nibco Nib-Seal.

c. Plug Valves: 150# SWP – 200# WOG, 2" and smaller – threaded ends, 2-1/2" and larger – flanged ends. Lubricated plug type, semi-steel body, single gland, wrench operated; Homestead or equal.

d. Globe Valves:

1) 2 Inch and Smaller: 125# SWP – 200# WOG, body and screwed bonnet of ASTM B 62 cast bronze, threaded ends, bronze disc, bronze stem, bronze packing gland, and aluminum handwheel.

2) 2-1/2 Inch and Larger: 125# SWP – 200# WOG, iron body and bolted bonnet conforming to ASTM A 126, Class B, bronze disc, cast iron handwheel, flanged ends, and brass packing gland.

e. Butterfly Valves:

1) 1-1/2 Inch and Larger: 200# WOG. Cast iron body conforming to ASTM A 126, Class B. Valves shall have field replaceable EPDM sleeve, with nickel-plated ductile iron disc, stainless steel stem, and EPDM stem seals. Size 2 through 6 inches shall have wheel handle with stem operators and locks, and sizes 8 through 24 inches shall have gear operators with position indicator. Valves shall be lug type, drilled and tapped. Valves shall be suitable for dead end service, bubble tight shut off. Milwaukee ML/CL Series.

f. Check Valves:

1) Swing Check Valves:

a) 2-Inch and Smaller: 125# SWP – 200# WOG, cast bronze body and cap conforming to ASTM B 62, horizontal swing, bronze disc, and threaded ends. Valve shall be capable of being reground while the valve remains in the line.

b) 2-1/2 Inch and Larger: 125# SWP – 200# WOG, cast iron body and bolted cap conforming to ASTM A 126, Class B, horizontal swing, bronze disc, and flanged ends. Valve shall be capable of being refitted while the valve remains in the line.

2) Spring Loaded (Non-Slam Check Valves for Pumps): Valves shall be iron body, globe typed silent check valves, bronze mounted, stainless steel spring with flanged (125-pounds drilling) end connections for installation between ASA 150 lbs. flat face steel slip on weld flanges.

4. Valves shall be accessible.

K. CONDENSATE DRAIN PIPING

1. Piping shall be SCH 40 PVC with glued joints.

2. Provide with traps and vents.

L. HVAC EQUIPMENT

1. Submit equipment for approval.

2. See the plans for equipment schedules.

3. Install equipment in strict accordance with manufacturer's recommendations.

4. Refrigeration compressors shall have a 5 year factory warranty.

5. See other specific equipment specification sections.

6. See Section A for use of Owner's new and existing, permanent HVAC Equipment during construction.

M. HVAC DUCT WORK

1. Louvers and dampers shall be equal to Ruskin.

N. HVAC CONTROLS

1. Coordinate installation with the equipment installed.

2. Wiring shall be in conduit.

3. Provide controllers and operators for valves, dampers and other devices.

O. TESTING, ADJUSTING, AND BALANCING

1. HVAC systems shall be tested, adjusted, and balanced by a company or individual approved by the Engineer.

2. All phases of the HVAC system shall be tested and balanced to the design conditions. A written report shall include the start up logs of the major equipment, the motor amps, installed cfm and static pressure, and the water flow rates at pumps and coils. Engineer shall not accept job until the report is received.

3. Provide the following as part of the tab work:

    a. Provide test data for air and water equipment

    b. Balance air system terminals

    c. Balance air device to air flows indicated

    d. Test and set system pump flows

    e. Balance flow through system coils, heat exchangers, chillers, and similar hydronic equipment.

    f. Balance bypass legs at water coils

4. If procedures were not performed during near peak summer or winter conditions, perform additional testing as required to confirm operation at peak seasonal conditions.

END OF SECTION

THIS PAGE INTENTIONALLY LEFT BLANK FOR DOUBLE SIDED PRINTING

SECTION 260500

COMMON WORK RESULTS FOR ELECTRICAL

PART 1 - GENERAL

1.1 SUMMARY

A. Section includes:

1. General requirements applicable to all Electrical Work.

2. General requirements for electrical submittals.

3. Interfaces to equipment, instruments, and other components:

4. The Drawings, Specifications, and overall design are based on preliminary information furnished by various equipment manufacturers which identify a minimum scope of supply from the manufacturers. This information pertains to, but is not limited to, instruments, control devices, electrical equipment, packaged mechanical systems, and control equipment provided with mechanical systems.

5. Provide all material and labor needed to install the actual equipment furnished, and include all costs to add any additional conduit, wiring, terminals, or other electrical hardware to the Work, which may be necessary to make a complete, functional installation based on the actual equipment furnished:

   a. Make all changes necessary to meet the manufacturer's wiring requirements.

   b. Submit all such changes and additions to the Engineer for acceptance.

6. Review the complete set of Drawings and Specifications in order to ensure that all items related to the electrical power and control systems are completely accounted for. Include any such items that appear on the Drawings or in the Specifications from another discipline in the scope of Work:

   a. If a conflict between Drawings and Specifications is discovered, refer conflict to the Engineer as soon as possible for resolution.

7. Loop drawings:

   a. Provide all electrical information required in the preparation of loop drawings including, but not limited to:

      1) Conduit numbers and associated signal(s) contained within each conduit.

      2) Wire numbers.

      3) Equipment terminal numbers.

      4) Junction boxes and signal(s) contained within each junction box.

      5) Equipment power sources, and associated circuit numbers.

      6) As-built drawings detailing wiring.

B. All electrical equipment and systems for the entire Project must comply with the requirements of the Electrical Specifications, whether referenced in the individual Equipment Specifications or not:

1. The requirements of the Electrical Specifications apply to all Electrical Work specified in other sections.

2. Inform all vendors supplying electrical equipment or systems of the requirements of the Electrical Specifications.

3. Owner is not responsible for any additional costs due to the failure of Contractor to notify all subcontractors and suppliers of the Electrical Specifications requirements.

C. Contract Documents:

1. General:

a. The Drawings and Specifications are complementary and are to be used together in order to fully describe the Work.

2. Specifications:

a. The General and Supplementary Conditions of the Contract Documents govern the Work.

b. These requirements are in addition to all General Requirements.

3. Contract Drawings:

a. The Electrical Drawings show desired locations, arrangements, and components of the Electrical Work in a diagrammatic manner.

b. Locations of equipment, control devices, instruments, boxes, panels, etc. are approximate only; exercise professional judgment in executing the Work to ensure the best possible installation:

c. The equipment locations and dimensions indicated on the Drawings are approximate. Use the shop drawings to determine the proper layout, foundation, and pad requirements, etc. for final installation. Coordinate with all subcontractors to ensure that all electrical equipment is compatible with other equipment and space requirements. Make changes required to accommodate differences in equipment dimensions.

d. The Contractor has the freedom to select any of the named manufacturers identified in the individual specification sections; however, the Engineer has designed the spatial equipment layout based upon a single manufacturer and has not confirmed that every named manufacturer’s equipment fits in the allotted space. It is the Contractor’s responsibility to ensure that the equipment being furnished fits within the defined space.

e. Installation details:

1) The Contract Drawings include typical installation details the Contractor is to use to complete the Electrical Work. For cases where a typical detail does not apply, develop installation details that may be necessary for completing the Work, and submit these details for review by the Engineer.

2) Not all typical installation details are referenced within the Drawing set. Apply and use typical details where appropriate.

4. Schematic diagrams:

a. All controls are shown de-energized.

b. Schematic diagrams show control function only. Incorporate other necessary functions for proper operation and protection of the system.

c. Add slave relays, where required, to provide all necessary contacts for the control system or where needed to function as interposing relays for control voltage coordination, equipment coordination, or control system voltage drop considerations.

d. Mount all devices shown on motor controller schematic diagrams in the controller compartment enclosure, unless otherwise noted or indicated.

e. Schematic diagrams are to be used in conjunction with the descriptive operating sequences in the Contract Documents. Combine all information and furnish a coordinated and fully functional control system.

1.2 REFERENCES

A. Code compliance:

1. As specified in the section for Regulatory Requirements.
The publications are referred to in the text by the basic designation only. The latest edition accepted by the Authority Having Jurisdiction of referenced publications in effect at the time of the bid governs.

2. The standards listed are hereby incorporated into this Section.

a. American National Standards Institute (ANSI).

b. American Society of Civil Engineers (ASCE):

c. ASCE 7 - Minimum Design Loads for Buildings and Other Structures.

d. ASTM International (ASTM).

e. Illuminating Engineering Society (IES).

f. Institute of Electrical and Electronics Engineers (IEEE).

g. Insulated Cable Engineers Association (ICEA).

h. International Code Council (ICC):

i. International Code Council Evaluation Service (ICC-ES).

j. AC 156 - Acceptance Criteria for Seismic Certification by Shake Table Testing of Non-Structural Components (ICC-ES AC 156).

k. International Society of Automation (ISA).

l. National Electrical Manufacturers Association (NEMA):

m. 250 - Enclosures for Electrical Equipment (1000 V Maximum).

n. National Fire Protection Association (NFPA):

o. 70 - National Electrical Code (NEC).

p. National Institute of Standards and Technology (NIST).

q. Underwriters' Laboratories, Inc. (UL).

r. Compliance with laws and regulations: As specified in Document 00700 - General Conditions.

1.3 DEFINITIONS

A. Definitions of terms and other electrical and instrumentation considerations as set forth by:

1. IEEE.
2. NETA.
3. IES.
4. ISA.
5. NEC.
6. NEMA.
7. NFPA.
8. NIST.
9. Specific definitions:
10. FAT: Factory acceptance test.
11. LCS: Local Control Station
12. ICSC: Instrumentation and controls subcontractor.
13. LCP: Local control panel: Operator interface panel that may contain an HMI, pilot type control devices, operator interface devices, control relays, etc. and does not contain a PLC or RIO.
14. PCM: Process control module: An enclosure containing any of the following devices: PLC, RTU, or RIO.
15. PCIS: Process control and instrumentation system.
16. RTU: Remote telemetry unit: A controller typically consisting of a PLC, and a means for remote communications. The remote communications devices typically are radios, modems, etc.
17. Space: That portion of the switchgear, motor control center, panelboard, switchboard or control panel that does not physically contain a device but is capable of accepting a device with no modifications to the equipment, i.e., provide all standoffs, bus, and hardware, as part of the space.
18. Spare: That portion of the switchgear, motor control center, panelboard, switchboard or control panel that physically contains a device with no load connections to be made.
19. VCP: Vendor control panel: Control panels that are furnished with particular equipment by a vendor other than the ICSC. These panels may contain PLCs, RIO, OIT, HMI, etc.
20. Unequipped space: That portion of the switchgear, motor control center, panelboard, switchboard or control panel that does not physically contain a device, standoff, bus, hardware, or other equipment.

1.4 SYSTEM DESCRIPTION

A. General requirements:

1. The Work includes everything necessary for and incidental to executing and completing the Electrical Work indicated on the Drawings and specified in the Specifications and reasonably inferable there from:
    a. The Electrical Drawings are schematic in nature; use the Structural, Architectural, Mechanical, and Civil Drawings for all dimensions and scaling purposes.

2. It is the intent of these Specifications that the entire electrical power, instrumentation, and control system be complete and operable. Provide all necessary material and labor for the complete system from source of power to final utilization equipment, including all connections, testing, calibration of equipment furnished by others as well as equipment furnished by the Contractor, whether or not specifically mentioned but which are necessary for successful operation.

3. Provide all Electrical Work, including conduit, field wiring, and connections by the electrical subcontractor under the provisions of the Electrical Specifications for all aspects of the Work.

4. Coordinate all aspects of the Work with the electrical subcontractor and other subcontractors before bidding in order to ensure that all costs associated with a complete installation are included. The Owner is not responsible for any change orders due to lack of coordination of the Work between the Contractor, the electrical subcontractor, the other subcontractors or suppliers.

5. Portions of this Project involve installation in existing facilities and interfaces to existing circuits, power systems, controls, and equipment:

    a. Perform and document comprehensive and detailed field investigations of existing conditions (circuits, power systems, controls, equipment, etc.) before starting any Work. Determine all information necessary to document, interface with, modify, upgrade, or replace existing circuits, power systems, controls, and equipment.

    b. Provide and document interface with, modifications to, upgrades, or replacement of existing circuits, power systems, controls, and equipment.

    c. Provide all trenching, forming, rebar, concrete, back filling, hard surface removal and replacement, for all items associated with the Electrical Work and installation:

        1) As specified in the Contract Documents.

B. Operating facility:

1. The Facility is an operating facility. Portions of this facility must remain fully functional throughout the entire construction period. In consideration of this requirement, comply with the following guidelines:

    a. All outages must be of minimal duration and fully coordinated and agreed to by the Owner. Adjust the construction schedule to meet the requirements of the Owner. All changes in schedule and any needs to reschedule are included in the Work.

    b. As weather and water demand conditions dictate, re-adjust the construction schedule to meet the demands placed upon Owner by its users.

    c. Coordinate the construction and power renovation, bear all costs, so that all existing facilities can continue operation throughout construction.

    d. According to individual circumstances and in compliance with the Drawings, extend or replace conduit and cable connections from existing locations.

    e. The standards of documentation, instrument tagging, cable and conductor ferruling, terminal identification and labeling that apply to the new installation apply equally to the existing installation which forms part of the modified system.

1.5 SUBMITTALS

A. General:

1. Instruct all equipment suppliers of submittals and operation and maintenance manuals of the requirements in this Section.
2. Furnish the submittals required by each section in the Electrical Specifications.
3. Adhere to the wiring numbering scheme specified in the section for Identification for Electrical Systems throughout the Project:
4. Uniquely number each wire.
5. Wire numbers must appear on all Equipment Drawings.
6. Use equipment and instrument tags, as indicated on the Drawings, for all submittals.

B. Seismic requirements:

1. Provide electrical equipment with construction and anchorage to supporting structures designed to resist site seismic loads based on the seismic design criteria in Specifications.
2. For equipment installed in structures designated as seismic design category C, D, E or F, prepare and submit the following:
    a. Statement of seismic qualification, and special seismic certification:
        1) “Statement of seismic qualification:” Provide manufacturer’s statement that the equipment satisfies the seismic design requirements of the building code indicated in the section for Regulatory Requirements, including the requirements of ASCE 7, Chapter 13.
        2) “Special seismic certification:” Provide manufacturer’s certification that the equipment, when subjected to shake table testing in accordance with ICC-ES AC 156, meets the “Post-Test Functional Compliance Verification” requirements of ICC-ES AC 156 for “Components with Ip = 1.5.” Compliance shall include both operability and containment of hazardous materials as appropriate to the unit being tested.
    b. Substantiating test data: With seismic qualification and special seismic certification statements, submit results of testing in accordance with ICC-ES AC 156.
    c. Anchoring design calculations and details:
        1) Submit project-specific drawings and supporting calculations, prepared and sealed by a professional engineer licensed in the state where the Project is being constructed, and showing details for anchoring electrical equipment to its supports and for anchoring supports provided with the equipment to the structure. Prepare calculations in accordance with the requirements of the section for Seismic Design Criteria.
        2) Exemptions: A “statement of seismic qualification” and a “special seismic certification” are not required for the following equipment:
    d. Temporary or moveable equipment.
        1) Equipment anchored to the structure and having a total weight of 20 pounds or less.
        2) Distribution equipment anchored to the structure and having a total unit weight of 3 pounds per linear foot, or less.

C. Submittal organization:

1. First page:
    a. Specification section reference.

b. Name and telephone number of individual who reviewed submittal before delivery to Engineer.

c. Name and telephone number of individual who is primarily responsible for the development of the submittal.

d. Place for Contractor's review stamp and comments.

2. Next pages:

a. Provide confirmation of specification compliance:

1) Specification section: Include with each submittal a copy of the relevant specification section.

2) Indicate in the left margin, next to each pertinent paragraph, either compliance with a check (√) or deviation with a consecutive number (1, 2, 3).

3) Provide a list of all numbered deviations with a clear explanation and reason for the deviation.

b. Include a response in writing to each of the Engineer's comments or questions for submittal packages which are re-submitted:

1) In the order that the comments or questions were presented throughout the submittal.

2) Referenced by index section and page number on which the comment appeared.

c. Acceptable responses to Engineer's comments are either:

1) Engineer's comment or change is accepted and appropriate changes are made.

2) Explain why comment is not accepted or requested change is not made.

3) Explain how requirement will be satisfied in lieu of comment or change requested by Engineer.

d. Any re-submittal, which does not contain responses to the Engineer's previous comments shall be returned for Revision and Re-submittal.

e. No further review by the Engineer will be performed until a response for previous comments has been received.

3. Remaining pages:

a. Actual submittal data:

1) Organize submittals in exactly the same order as the items are referenced, listed, and/or organized in the specification section.

2) For submittals that cover multiple devices used in different areas under the same specification section, the submittal for the individual devices must list the area where the device is intended to be used.

D. Submittal requirements:

1. Furnish submittals that are fully indexed with a tabbed divider for every component.

2. Sequentially number pages within the tabbed sections. Submittals and operation and maintenance manuals that are not fully indexed and tabbed with sequentially numbered pages, or are otherwise unacceptable, will be returned without review.

3. Edit all submittals and operation and maintenance manuals so that the submittal specifically applies to only the equipment furnished.

4. Neatly cross out all extraneous text, options, models, etc. that do not apply to the equipment being furnished, so that the information remaining is only applicable to the equipment being furnished.

5. Submit copies of shop drawings, and product data:

    a. Show dimensions, construction details, wiring diagrams, controls, manufacturers, catalog numbers, and all other pertinent details.

6. Where submittals are required, provide a separate submittal for each specification section. In order to expedite construction, the Contractor may make more than 1 submittal per specification section, but a single submittal may not cover more than 1 specification section:

    a. The only exception to this requirement is when 1 specification section covers the requirements for a component of equipment specified in another section. (For example, circuit breakers are a component of switchgear. The switchgear submittal must also contain data for the associated circuit breakers, even though they are covered in a different specification section.)

7. Exceptions to Specifications and Drawings:

    a. Include a list of proposed exceptions to the Specifications and Drawings along with a detailed explanation of each.

    b. If there is insufficient explanation for the exception or deviation, the submittal will be returned requiring revision and re-submittal.

    c. Acceptance of any exception is at the sole discretion of the Engineer.

    d. Provide all items (materials, features, functions, performance, etc.) required by the Contract Documents that are not accepted as exceptions.

    e. Replace all items that do not meet the requirements of the Contract Documents, which were not previously accepted as exceptions, even if the submittals contained information indicating the failure to meet the requirements.

8. Specific submittal requirements:

    a. Shop drawings:

        1) Required for materials and equipment listed in this and other sections.

        2) Furnish sufficient information to evaluate the suitability of the proposed material or equipment for the intended use, and for compliance with these Specifications.

        3) Shop drawings requirements:

            a) Front, side, and, rear elevations, and top and bottom views, showing all dimensions.

            b) Locations of conduit entrances and access plates.

            c) Component layout and identification.

            d) Schematic and wiring diagrams with wire numbers and terminal identification.

            e) Connection diagrams, terminal diagrams, internal wiring diagrams, conductor size, etc.

            f) Anchoring method and leveling criteria, including manufacturer’s recommendations for the Project site seismic criteria.

            g) Weight.

h) Finish.

b. Nameplates:

1) As specified in the section for Identification for Electrical Systems.

2) Temperature limitations, as applicable.

c. Product data:

1) Submitted for non-custom manufactured material listed in this and other sections and shown on shop drawings.

2) Include:

a) Catalog cuts.

b) Bulletins.

c) Brochures.

d) Quality photocopies of applicable pages from these documents.

e) Identify on the data sheets the Project name, applicable specification section, and paragraph.

f) Identify model number and options for the actual equipment being furnished.

g) Neatly cross out options that do not apply or equipment not intended to be supplied.

h) Detailed sequence of operation for all equipment or systems.

E. Operation and maintenance manuals:

1. As specified in the section for Operation and Maintenance Data.

2. Furnish the Engineer with a complete set of written operation and maintenance manuals 8 weeks before Functional Acceptance Testing.

F. Material and equipment schedules:

1. Furnish a complete schedule and/or matrix of all materials, equipment, apparatus, and luminaries that are proposed for use:

2. Include sizes, names of manufacturers, catalog numbers, and such other information required to identify the items.

G. Schedule of values:

1. In addition to completing all items referred to in the schedule of values, submit per unit material and labor costs used in developing the final bid for the electrical system, for the express purpose of pricing and cost justification for any proposed change orders. In addition to the items shown on the schedule of values, provide per unit material and labor costs for conduit and wire installation for specific types, sizes, and locations as indicated on the Drawings. It is the responsibility of the electrical subcontractor to prove to the Engineer’s satisfaction that said per unit costs were used in the development of the final Bid amount.

H. Roof penetrations:

1. Submit details of all portions of the electrical installation that penetrate the roof. Include details showing support of the penetrating component, and the sealing means to be utilized.

I. Record Documents:

1. Provide Record Documents of all Electrical Drawings.
2. Record Drawing requirements:
    a. Update Record Drawings weekly.
    b. Record Drawings must be fully updated as a condition of the monthly progress payments.
    c. Submit Record Drawings upon completion of the Work for final review.
    d. Clearly and neatly show all changes including the following:
        1) All existing pipe, conduit, wire, instruments or other structures encountered or uncovered during construction.
3. Shop drawings:
    a. Upon completion of the Work, update all shop drawings to indicate the final as-built configuration of the systems:
    b. Provide as-built shop drawings for all electrical equipment on 11-inch by 17-inch paper.
    c. Size all drawings to be readable and legible on 11-17-inch media.
    d. Provide electronic copies of these documents on CD-ROM or DVD disks in PDF format.
4. Review and corrections:
    a. Correct any record documents or other documents found to be incomplete, not accurate, of poor quality, or containing errors.
    b. Promptly correct and re-submit record documents returned for correction.

J. Test reports:
1. Include the following:
    a. A description of the test.
    b. List of equipment used.
    c. Name of the person conducting the test.
    d. Date and time the test was conducted.
    e. All raw data collected.
    f. Calculated results.
2. Each report signed by the person responsible for the test.
3. Additional requirements for field acceptance test reports are specified in the section for Field Electrical Acceptance Tests.

K. Calculations:
1. Where required by specific Electrical Specifications:
    a. Because these calculations are being provided by a registered professional engineer, they will be reviewed for form, format, and content but will not be reviewed for accuracy and calculation means.

1.6 QUALITY ASSURANCE

A. Furnish all equipment listed by and bearing the label of UL or of an independent testing laboratory acceptable to the Engineer and the Authority Having Jurisdiction.

1.7 DELIVERY, STORAGE, AND HANDLING

A. As specified in the section for Product Requirements.

B. Shipping precautions:

1. After completion of shop assembly and successful factory testing, pack all equipment in protective crates, and enclose in heavy duty polyethylene envelopes or secured sheeting to provide complete protection from damage, dust, and moisture.

2. Place dehumidifiers, when required, inside the polyethylene coverings.

3. Skid-mount the equipment for final transport.

4. Provide lifting rings for moving without removing protective covering.

5. Display boxed weight on shipping tags together with instructions for unloading, transporting, storing, and handling at the job site.

C. Delivery and inspection:

1. Deliver products in undamaged condition, in manufacturer's original container or packaging with identifying labels intact and legible. Include date of manufacture on label.

D. Special instructions:

1. Securely attach special instructions for proper field handling, storage, and installation to each piece of equipment before packaging and shipment.

1.8 PROJECT OR SITE CONDITIONS

A. Site conditions:

1. Provide an electrical, instrumentation and control system, including all equipment, raceways, and any other components required for a complete installation that meets the environmental conditions for the Site as specified in the General Requirements and below.

2. Seismic load resistance:

a. Provide electrical equipment with construction and anchorage to supporting structures designed to resist site seismic loads as specified in Specifications.

3. Wind load resistance:

a. Provide electrical equipment with construction and anchorage to supporting structures designed to resist site wind loads as specified in Specifications.

4. Altitude, temperature and humidity:

a. As specified in Specifications.

b. Provide all electrical components and equipment fully rated for continuous operation at this altitude, with no additional derating factors applied.

c. Provide additional temperature conditioning equipment to maintain all equipment in non-conditioned spaces subject to these ambient temperatures, with a band of 10 degrees Fahrenheit above the minimum operating temperature and 10 degrees Fahrenheit below maximum operating temperature, as determined by the equipment manufacturer's guidelines:

d. Provide all power conduits wiring for these devices (e.g. heaters, fans, etc.) whether indicated on the Drawings or not.

5. Outdoor installations:

a. Provide electrical, instrumentation and control equipment suitable for operation in the ambient conditions where the equipment is located.

b. Provide heating, cooling, and dehumidifying devices incorporated into and included with electrical equipment, instrumentation and control panels to maintain the enclosures within the rated environmental operating ranges as specified in this Section for the equipment:

c. Provide all wiring necessary to power these devices.

d. Provide enclosures for electrical, instrumentation and control equipment, regardless of supplier or subcontractor furnishing the equipment, that meet the requirements outlined in NEMA Standard 250 for the following types of enclosures:

1) NEMA Type 1: Intended for indoor use, primarily to provide a degree of protection from accidental contact with energized parts or equipment.

2) NEMA Type 4: Intended for indoor or outdoor use, primarily to protect equipment from exposure to windblown dust and rain, splashing or hose directed water, ice formation and freezing.

3) NEMA Type 4X: Made from corrosion resistant materials and are intended for indoor or outdoor use, primarily to protect equipment from exposure to windblown dust and rain, splashing or hose directed water, ice formation and freezing, and corrosion. Provide specific materials as specified or indicated on the Drawings.

4) NEMA Type 12: Intended for indoor use, primarily to provide a degree of protection from dust, falling dirt and dripping non-corrosive liquids.

5) NEMA Type 7: Intended for installation in locations where explosive or combustible gas or vapors may be present (Class I Division 1 or Class I Division 2) meeting the requirements outlined in the section for Hazardous Classified Area Construction.

6. Plant area Electrical Work requirements:

a. Provide all Electrical Work in accordance with the following table, unless otherwise specifically indicated on the Drawings:

PLANT AREA	NEMA ENCLOSURE TYPE	EXPOSED CONDUIT TYPE	ENVIRONMENT W = WET D = DAMP C = CLEAN/DRY X = CORROSIVE H = HAZARDOUS	SUPPORT MATERIALS
Indoor Conditioned Spaces	NEMA 1	Galvanized rigid steel	C	Stainless steel
Above lay-in ceilings	NEMA 1	EMT	C	Stainless steel
Indoor Non-Conditioned Spaces	NEMA 1	Galvanized rigid steel	C	Stainless steel
Below Grade/Vault	NEMA 3R	Galvanized rigid steel	X	Stainless steel
Outdoor	NEMA 3R	Galvanized rigid steel	W	Stainless steel

PLANT AREA	NEMA ENCLOSURE TYPE	EXPOSED CONDUIT TYPE	ENVIRONMENT W = WET D = DAMP C = CLEAN/DRY X = CORROSIVE H = HAZARDOUS	SUPPORT MATERIALS
Classified Areas	NEMA Type 7	Galvanized rigid steel	H	Stainless steel

Modify exposed conduit runs as specified in the section for Conduits.

1.9 SEQUENCING (NOT USED)

1.10 SCHEDULING

A. General:

1. Testing requirements are specified in the section for Field Electrical Acceptance Tests and other sections.

B. Pre-submittal conference:

1. Before producing any submittals, schedule a pre-submittal conference for the purposes of reviewing the entire Project, equipment, control philosophy, schedules, and submittal requirements.

2. Contractor, electrical subcontractor, all suppliers, and individual equipment manufacturers furnishing major pieces of equipment must attend.

C. Factory acceptance testing (FAT):

1. Where FAT is required for equipment covered by these Specifications, notify the Engineer in writing when the equipment is completed and ready for factory inspection and testing:

2. Indicate the desired dates for inspection and testing.

3. Schedule the FAT after approval of the FAT procedures submittal:

a. Submit a copy of the test procedures including all forms at least 21 days before any scheduled test date.

b. Notify the Engineer of the scheduled tests a minimum of 15 days before the date of the test.

1.11 WARRANTY

A. Warrant the Electrical Work as specified in General Conditions:

B. Provide additional warranty as specified in the individual Electrical Specifications.

1.12 SYSTEM START-UP

A. Replace or modify equipment, software, and materials that do not achieve design requirements after installation in order to attain compliance with the design requirements:

B. Following replacement or modification, retest the system and perform additional testing to place the complete system in satisfactory operation and obtain compliance acceptance from the Engineer.

1.13 OWNER'S INSTRUCTIONS (NOT USED)

1.14 MAINTENANCE

A. Before Substantial Completion, perform all maintenance activities required by any sections of the Specifications including any calibrations, final adjustments, component replacements or other routine service required before placing equipment or systems in service.

B. Furnish all spare parts as required by other sections of the Specifications.

PART 2 - PRODUCTS

2.1 MANUFACTURERS

A. Provide similar items of same manufacturer throughout the electrical and instrumentation portion of the Project.

B. Allowable manufacturers are specified in individual Electrical Specifications.

2.2 EXISTING PRODUCTS (NOT USED)

2.3 MATERIALS

A. Furnish all materials under this Contract that are new, free from defects, and standard products produced by manufacturers regularly engaged in the production of these products and that bear all approvals and labels as required by the Specifications.

B. Provide materials complying with the applicable industrial standard as specified in General Conditions.

C. Stainless steel:

1. Where stainless steel is indicated or used for any portion of the Electrical Work, provide a non-magnetic, corrosion-resistant alloy, ANSI Type 316, satin finish.

2. Provide exposed screws of the same alloys.

3. Provide finished material free of any burrs or sharp edges.

4. Use only stainless steel hardware, when chemically compatible, in all areas that are or could be in contact with corrosive chemicals.

5. Use stainless steel hardware, when chemically compatible, in all chemical areas or areas requiring NEMA Type 4X construction.

6. Do not use stainless steel in any area containing chlorine, gas or solution, chlorine products or ferric chloride.

2.4 MANUFACTURED UNITS (NOT USED)

2.5 EQUIPMENT (NOT USED)

2.6 COMPONENTS (NOT USED)

2.7 ACCESSORIES (NOT USED)

2.8 MIXES (NOT USED)

2.9 FABRICATION (NOT USED)

2.10 FINISHES (NOT USED)

2.11 SOURCE QUALITY CONTROL

A. Provide all equipment that is new, free from defects, and standard products produced by manufacturers regularly engaged in the production of these products.

PART 3 - EXECUTION

3.1 EXAMINATION

A. The electrical subcontractor is encouraged to visit the site to examine the premises completely before bidding.

B. **Review the site conditions and examine all shop drawings for the various items of equipment in order to determine exact routing and final terminations for all wiring and cables.**

C. It is the electrical subcontractor's responsibility to be fully familiar with the existing conditions and local requirements and regulations.

D. Comply with pre-bid conference requirements as specified in Instructions to Bidders.

3.2 PREPARATION (NOT USED)

3.3 INSTALLATION

A. Equipment locations shown on Electrical Drawings may change due to variations in equipment size or minor changes made by others during construction:

B. Verify all dimensions indicated on the Drawings:

1. Actual field conditions govern all final installed locations, distances, and levels.

C. Review all Contract Documents and approved equipment shop drawings and coordinate Work as necessary to adjust to all conditions that arise due to such changes.

D. Make minor changes in location of equipment before rough in, as directed by the Owner or Engineer.

E. Provide a complete electrical system:

1. Install all extra conduits, cables, and interfaces as may be necessary to provide a complete and operating electrical system.

2. Install the equipment in accordance with the accepted installation instructions and anchorage details to meet the seismic and wind load requirements at the Project site.

F. Cutting and patching:

1. Perform all cutting, patching, channeling, core drilling, and fitting required for the Electrical Work, except as otherwise directed:

2. Secure the permission of the Engineer before performing any operation likely to affect the strength of a structural member such as drilling, cutting or piercing:

3. Before cutting, channeling, or core drilling any surface, ensure that no penetration of any other systems will be made:

a. Verify that area is clear and free of conduits, cables, piping, ductwork, post-tensioning cables, etc.

b. Use tone-locate system or X-ray to ensure that area is clear of obstructions.

c. Review the complete Drawing set to ensure that there are no conflicts or coordination problems before cutting, channeling, or core drilling any surface.

4. Perform all patching to the same quality and appearance as the original work. Employ the proper tradesmen to secure the desired results. Seal around all conduits, wires, and cables penetrating walls, ceilings, and floors in all locations with a fire stop material, typically:
    a. 3M: CP 25WB+: Caulk.
    b. 3M: Fire Barrier: Putty.
5. Install all conduits and equipment in such a manner as to avoid all obstructions and to preserve headroom and keep openings and passageways clear:
    a. Install all conduits and equipment in accordance with working space requirements in accordance with the NEC.
    b. This includes any panel, disconnect switch or other equipment that can be energized while open exposing live parts regardless of whether it is likely to require examination or has serviceable parts.
    c. Where the Drawings do not show dimensions for locating equipment, install equipment in the approximate locations indicated on the Drawings.
    d. Adjust equipment locations as necessary to avoid any obstruction or interferences.
    e. Where an obstruction interferes with equipment operation or safe access, relocate the equipment.
    f. Where the Drawings do not indicate the exact mounting and/or supporting method to be used, use materials and methods similar to the mounting details indicated on the Drawings.

G. Earthwork and concrete:
1. Install all trenching, shoring, concrete, backfilling, grading and resurfacing associated with the Electrical Work:
    a. Requirements as specified in the Contract Documents.

H. Roof penetrations:
1. Seal conduit penetrations in accordance with roofing manufacturer’s instructions.

I. Terminations:
1. Provide and terminate all conductors required to interconnect power, controls, instruments, panels, and all other equipment.

J. Miscellaneous installation requirements:
1. In case of interference between electrical equipment indicated on the Drawings and the other equipment, notify the Engineer as specified in General Conditions.
2. Location of manholes and pullboxes indicated on the Drawings are approximate. Coordinate exact location of manholes and pullboxes with Mechanical and Civil Work.
3. Provide additional manholes or pullboxes to those shown where they are required to make a workable installation.
4. Circuits of different service voltage:
    a. Voltage and service levels:
    b. Medium voltage: greater than 1.0 kV.
    c. Low voltage: 120 V to 480 V.
    d. Instrumentation: Less than 50 VDC.

e. Install different service voltage circuits in separate raceways, and junction boxes.

5. In manholes, install all cables operating at less than 50 VDC in PVC coated flexible metallic conduit, with corrosion resistant fittings.

6. Labeling:

K. Equipment tie-downs:

1. Anchor all instruments, control panels, and equipment by methods that comply with seismic and wind bracing criteria, which apply to the Site.

2. **ALL CONTROL PANELS MUST BE PERMANENTLY MOUNTED AND TIED DOWN TO STRUCTURES IN ACCORDANCE WITH THE PROJECT SEISMIC CRITERIA.**

3.4 ERECTION, INSTALLATION, APPLICATION, CONSTRUCTION (NOT USED)

3.5 REPAIR/RESTORATION (NOT USED)

3.6 RE-INSTALLATION (NOT USED)

3.7 FIELD QUALITY CONTROL

A. Inspection:

1. Provide any assistance necessary to support inspection activities.

2. Engineer inspections may include, but are not limited to, the following:

3. Inspect equipment and materials for physical damage.

4. Inspect installation for compliance with the Drawings and Specifications.

5. Inspect installation for obstructions and adequate clearances around equipment.

6. Inspect equipment installation for proper leveling, alignment, anchorage, and assembly.

7. Inspect equipment nameplate data to verify compliance with design requirements.

8. Inspect raceway installation for quality workmanship and adequate support.

9. Inspect cable terminations.

10. Inspection activities conducted during construction do not satisfy inspection or testing requirements specified in the section for Field Electrical Acceptance Tests.

B. Field acceptance testing (Functional Testing):

1. Notify the Engineer when the Electrical Work is ready for field acceptance testing.

2. Perform the field acceptance tests as specified in the section for Field Electrical Acceptance Tests.

3. Record results of the required tests along with the date of test:

4. Use conduit identification numbers to indicate portion of circuit tested.

C. Workmanship:

1. Leave wiring in panels, manholes, boxes, and other locations neat, clean, and organized:

2. Neatly coil and label spare wiring lengths.

3. Shorten, re-terminate, and re-label excessive used as well as spare wire and cable lengths, as determined by the Engineer.

3.8 ADJUSTING (NOT USED)

3.9 CLEANING

A. Remove all foreign material and restore all damaged finishes to the satisfaction of the Engineer and Owner.

B. Clean and vacuum all enclosures to remove all metal filings, surplus insulation and any visible dirt, dust or other matter before energization of the equipment or system start-up:

C. Use of compressors or air blowers for cleaning is not acceptable.

D. As specified in other sections of the Contract Documents.

3.10 PROTECTION

A. Protect all Work from damage or degradation until Substantial Completion.

B. Maintain all surfaces to be painted in a clean and smooth condition.

3.11 SCHEDULES (NOT USED)

END OF SECTION

SECTION 260520

HAZARDOUS CLASSIFIED AREA CONSTRUCTION

PART 1 - GENERAL

1.1 SUMMARY

A. Section includes:

1. Executing and completing Work in hazardous and/or classified areas as defined by the NEC Articles 500 through 516, NFPA 820, and as indicated on the Drawings and specified in the Specifications.

1.2 REFERENCES

A. As specified in the Common Work Results for Electrical section.

1.3 DEFINITIONS

A. As specified in the Common Work Results for Electrical section.

B. Specific definitions:

1. For the purposes of these Specifications, the terms “Hazardous” and “Classified” will be considered synonymous.

1.4 SYSTEM DESCRIPTION (NOT USED)

1.5 SUBMITTALS

A. Furnish submittals as specified in the Sections covering Submittal Procedures and Common Work Results for Electrical.

1.6 QUALITY ASSURANCE

A. As specified in the Common Work Results for Electrical section.

B. Regulatory requirements:

1. All wiring in hazardous and/or classified locations shall comply with all applicable articles of the NEC, in particular Articles 500 through 516.
2. Except as modified in Articles 500 through 516, all other applicable rules contained in the NEC shall apply to electric equipment and wiring installed in hazardous and/or classified locations.
3. All devices used in Class I Division 1 or Division 2 areas must have visible manufacturer installed nameplates specifically stating the Class, Division, and Group for which the device is approved.

1.7 DELIVERY, STORAGE, AND HANDLING

A. As specified in the Common Work Results for Electrical section.

1.8 PROJECT OR SITE CONDITIONS

A. The following areas are classified Class I, Division 1:

1. Refer to classification area drawing.

1.9 SEQUENCING

A. Conduit seals shall be filled during start-up and commissioning after verification of field wiring. Conduit seals shall be filled prior to the introduction of process or gas to the equipment/area.

1.10 SCHEDULING (NOT USED)

1.11 WARRANTY (NOT USED)

1.12 SYSTEM START-UP (NOT USED)

1.13 OWNER'S INSTRUCTIONS (NOT USED)

1.14 MAINTENANCE (NOT USED)

PART 2 PRODUCTS

2.1 MANUFACTURERS (NOT USED)

2.2 EXISTING PRODUCTS (NOT USED)

2.3 MATERIALS (NOT USED)

2.4 MANUFACTURED UNITS (NOT USED)

2.5 EQUIPMENT (NOT USED)

2.6 COMPONENTS

A. Conduit and sealing fittings:

1. As specified in the Conduits section.

B. Conduit boxes and bodies:

1. As specified in the Boxes section.

C. Wiring devices:

1. As specified in the Wiring Devices section.

2.7 ACCESSORIES (NOT USED)

2.8 MIXES (NOT USED)

2.9 FABRICATION (NOT USED)

2.10 FINISHES (NOT USED)

2.11 SOURCE QUALITY CONTROL (NOT USED)

PART 3 EXECUTION

3.1 EXAMINATION (NOT USED)

3.2 PREPARATION (NOT USED)

3.3 INSTALLATION

A. As specified in the Common Work Results for Electrical section.

B. Conduit installation:
   1. As specified in the Conduits section.
   2. Wrench tighten all conduit joints to minimize sparking when fault current flows through the conduit system.
   3. Make all conduit connections so that there are a minimum of 5 threads fully engaged in the connection.
   4. Flexible conduit:
      a. Class I Division 1 hazardous areas:
         1) Approved and marked suitable for Class I Division 1.
         2) Listed for compatibility with the group type atmosphere where used.
      b. Class I Division 2 areas:
         1) Liquidtight metal conduit with approved fittings.
      c. Maximum length as specified in the Conduits section.

C. Sealing fittings:
   1. Provide an approved seal, no more than 12 inches from the enclosure, for all conduits entering an enclosure containing switches, circuit breakers, fuses, relays, resistors, or any other apparatus which may produce arcs, sparks, or high temperatures:
      a. Only explosion proof unions, couplings, elbows, capped elbows, and conduit bodies similar to “L”, “T”, and “X” may be installed between the sealing fitting and the enclosure.
   2. Provide entire assemblies approved for Class I locations for self-sealing or factory sealed assemblies where the equipment that may produce arcs, sparks, or high temperatures is located in a compartment separate from the compartment containing splices or taps, and an integral seal is provided where conductors pass from one compartment to the other:
      a. Seals are required in all conduit connections to the compartment containing splices and must be within 12 inches of the enclosure.
   3. Install a conduit seal within 12 inches of the boundary in each conduit run entering or leaving a classified location. No union, coupling, box, or fitting is allowed in the conduit between the sealing fitting and the point at which the conduit leaves the classified location.
   4. For underground conduits entering or leaving a classified location or between Class I Division 1 and Division 2 locations:
      a. Provide a conduit seal at both points where the conduit emerges from the ground:
         1) Place the conduit seal within 18 inches of finished grade.
         2) No union, coupling, box, or fitting is allowed in the conduit system between the seal fitting and the point at which the conduit enters the ground.
   5. Separate all conductors within the conduit system and seal using an approved packing dam installed to both hold the sealing compound and to maintain the separation between the wires:
      a. Remove the outer jacket of multi-conductor non-shielded cables in the area of the sealing fitting and separate each conductor from the cable and seal individually.
   6. Install seals with drains in all electrical control stations, low points of conduit or any place where moisture may condense and accumulate.
   7. Install the sealing compound with a minimum thickness of 5/8 inch or the trade size of the conduit, whichever is greater.

D. Boxes and fittings:
   1. Class I Division 1 areas:
      a. Utilize threaded connections for all metallic boxes, fittings, and joints to the conduit system.
   2. Class I Division 2 areas:
      a. Provide approved grounding bushings on conduits entering and exiting metallic boxes to bond the conduits together.

E. Outlet boxes and bodies:
   1. Provide conduits bodies and boxes suitable for the conduit system as specified in the Conduits section.
   2. Class I Division 2 areas:
      a. Boxes not containing arcing parts:
         1) Material and NEMA ratings as specified in Section 16050 - Common Work Results for Electrical.
         2) Pressed metal boxes are not allowed.
      b. Provide heavy duty cast construction type conduit fittings and joints:
         1) Explosion proof rated fittings and joints are not necessary.
      c. Any enclosure containing arcing parts, etc. shall have all construction associated with the enclosure, conduit system, etc. conforming to Class I Division 1 construction.

F. Motor connections:
   1. Conduit installation in Class I Division 1 and Class I Division 2 locations for motors that contain arcing parts, shall proceed as follows:
      a. First - Conduit.
      b. Second - Explosion proof flexible coupling.
      c. Third - Sealing fitting.
      d. Fourth - Explosion proof union.
      e. Fifth - Connection to the motor terminal box.
   2. Wiring connections to motor leads shall be as specified in Section 16150 - Low Voltage Wire Connections.
   3. Bond the non-current-carrying metal parts of equipment, raceways and other enclosures as required by the NEC to ensure electrical continuity.

3.4 ERECTION, INSTALLATION, APPLICATION, CONSTRUCTION (NOT USED)

3.5 REPAIR/RESTORATION (NOT USED)

3.6 RE-INSTALLATION (NOT USED)

3.7 COMMISSIONING (NOTNUSED)

3.8 FIELD QUALITY CONTROL

A. As specified in the Common Work Results for Electrical section.

B. Obtain inspection and approval from the Engineer before and after each seal is poured.

3.9 ADJUSTING (NOT USED)

3.10 CLEANING (NOT USED)

3.11 PROTECTION (NOT USED)

3.12 SCHEDULES (NOT USED)

END OF SECTION

SECTION 260600

GROUNDING AND BONDING

PART 1 - GENERAL

1.1 SUMMARY

A. Section includes: Grounding materials and requirements.

1.2 REFERENCES

A. As specified in the Common Work Results for Electrical.

B. ASTM International (ASTM):
   1. B3 - Standard Specification for Soft or Annealed Copper Wire.
   2. B8 - Standard Specification for Concentric-Lay-Stranded Copper Conductors, Hard, Medium-Hard, or Soft.

C. Institute of Electrical and Electronics Engineers (IEEE):
   1. 81 - IEEE Guide for Measuring Earth Resistivity, Ground Impedance, and Earth Surface Potentials of a Grounding System.

D. Underwriters Laboratories, Inc. (UL):
   1. 467 - Ground and Bonding Equipment.

1.3 DEFINITIONS

A. As specified in the Common Work Results for Electrical section.

1.4 SUBMITTALS

A. Furnish submittals as specified in the Submittal Procedures section and the Common Work Results for Electrical section.

B. Product data:
   1. Catalog cut sheets.

1.5 QUALITY ASSURANCE

A. As specified in the Common Work Results for Electrical section.

B. All grounding components and materials shall be UL listed and labeled.

1.6 DELIVERY, STORAGE, AND HANDLING

A. As specified in the Common Work Results for Electrical section.

1.7 PROJECT/SITE CONDITIONS (NOT USED)

1.8 SEQUENCING (NOT USED)

1.9 SCHEDULING (NOT USED)

1.10 WARRANTY

A. As specified in the Common Work Results for Electrical.

1.11 SYSTEM START-UP

A. As specified in the Common Work Results for Electrical section.

1.12 OWNER'S INSTRUCTIONS (NOT USED)

1.13 MAINTENANCE (NOT USED)

PART 2 - PRODUCTS

2.1 MANUFACTURERS

A. Exothermic connectors: One of the following or equal:
   1. Erico.
   2. Harger.
   3. Burndy.
   4. Thomas & Betts.

B. Ground rods: One of the following or equal:
   1. Erico.
   2. Harger.
   3. Nehring.
   4. Thomas & Betts.

C. Ground cable: One of the following or equal:
   1. Erico.
   2. Harger.
   3. Nehring.
   4. Southwire.

D. Precast ground well boxes: One of the following or equal:
   1. Brooks Products, 3-RT Valve Box.
   2. Christy Concrete Products, G12 Valve Box.

2.2 SYSTEM DESCRIPTION

A. Ground equipment and raceway systems so that the completed installation conforms to all applicable code requirements.

B. Provide a complete electrical grounding system as indicated on the Drawings and as specified including but not limited to:
   1. Grounding electrodes.
   2. Bonding jumpers.
   3. Ground connections.

C. Provide bonding jumpers and wire, grounding bushings, clamps and appurtenances required for complete grounding system to bond equipment and raceways to equipment grounding conductors.

D. The ground system resistance (electrode to ground) of the completed installation, as determined by tests specified in Section 16950 - Field Electrical Acceptance Tests, shall be:
   1. 5 ohms or less for industrial systems.

2.3 EXISTING PRODUCTS (NOT USED)

2.4 MATERIALS

A. Ground rod:
   1. Minimum: 3/4-inch diameter, 10 feet long.
   2. Uniform 10 mil covering of electrolytic copper metallically bonded to a rigid steel core:
      a. The copper-to-steel bond shall be corrosion resistant.
   3. In accordance with UL 467.
   4. Sectional type joined by threaded copper alloy couplings.
   5. Fit the top of the rod with a threaded coupling and steel-driving stud.

B. Ground cable:
   1. Requirements:
      a. Soft drawn (annealed).
      b. Concentric lay, coarse stranded in accordance with ASTM B8.
   2. Size is as indicated on the Drawings, but not less than required by the NEC.

C. Exothermic welds:
   1. Current carrying capacity equal to that of the conductor.
   2. Permanent molecular bond that cannot loosen or corrode over time.
   3. Will not deteriorate with age.
   4. Use low emission welds for indoor installations.

D. Equipment grounding conductors:
   1. Conductors shall be the same type and insulation as the load circuit conductors:
      a. Use 600-volt insulation for the equipment grounding conductors for medium voltage systems.
   2. Minimum size in accordance with the NEC.

E. Grounding electrode conductors:
   1. Minimum size in accordance with the NEC.

F. Main bonding jumpers and bonding jumpers:
   1. Minimum size in accordance with the NEC.

2.5 MANUFACTURED UNITS (NOT USED)

2.6 EQUIPMENT (NOT USED)

2.7 COMPONENTS (NOT USED)

2.8 ACCESSORIES

A. Precast ground well boxes:
   1. Minimum 10-inch interior diameter.
   2. Traffic-rated cast iron cover.

3. Permanent “GROUND” marking on cover.

2.9 MIXES (NOT USED)

2.10 FABRICATION (NOT USED)

2.11 FINISHES (NOT USED)

2.12 SOURCE QUALITY CONTROL (NOT USED)

PART 3 - EXECUTION

3.1 EXAMINATION (NOT USED)

3.2 PREPARATION (NOT USED)

3.3 INSTALLATION

A. As specified in the Common Work Results for Electrical section.

B. Provide a separate, green insulated, grounding conductor in each raceway independent of raceway material:
   1. Multi-conductor power and control cables shall include an integral green insulated grounding conductor.
   2. Provide a separate grounding conductor in each individual raceway for parallel feeders.

C. Provide a separate grounding conductor for each motor and connect at motor terminal box. Do not use bolts securing motor box to frame or cover for grounding connectors:
   1. When grounding motors driven by variable frequency drives (VFD) comply with the requirements of the VFD manufacturer.

D. Provide a grounding type bushing with lug for connection of grounding conductor for conduits that originate from each motor control center section, switchboard, or panelboard:
   1. Individually bond these raceways to the ground bus in the equipment.

E. Provide grounding type bushings with lugs for connection of grounding conductor at both ends of metallic conduit runs. Bond ground bushings to the grounding system.

F. Provide a green insulated wire-grounding jumper from the ground screw to a box grounding screw and, for grounding type devices, to equipment grounding conductor.

G. Interconnect the secondary switchgear, switchboard, or panelboard neutral bus to the ground bus in the secondary switchgear, switchboard, or panelboard compartment, only at service entrance point or after a transformer.

H. Duct bank ground system:
   1. Provide a bare copper grounding conductor the entire length of each duct bank.
   2. Bond duct bank ground conductors together where duct banks join, merge, intersect, or split.

I. Grounding at service (600 V or Less):
   1. Connect the neutral to ground only at one point within the enclosure of the first disconnecting means on the load side of the service transformer.

J. Ground connections:
   1. All connections to the ground grid system, the duct bank grounding system, equipment, ground rods, etc., shall be made using exothermic welds as indicated on the Drawings, UL listed, and labeled for the application.
   2. Make ground connections in accordance with the manufacturer's instructions.

K. Grounding electrode system:
   1. Ground ring:
      a. Provide all trenching and materials necessary to install the ground ring as indicated on the Drawings.
      b. Ground ring conductor shall be in direct contact with the earth.
      c. Minimum burial depth 36 inches or as indicated on the Drawings.
      d. Re-compact disturbed soils to original density in 6-inch lifts.
   2. Ground rods:
      a. Locations as indicated on the Drawings.
      b. Length of rods forming an individual ground array shall be equal in length.
      c. Drive ground rods and install grounding conductors before construction of concrete slabs and duct banks.
   3. Metal underground water pipe:
      a. Bond metal underground domestic water pipe to grounding electrode system.
   4. Metal frame of building or structure:
      a. Bond metal frame of building or structure to grounding electrode system.
   5. Extend grounding conductors through concrete to accessible points for grounding equipment and electrical enclosures.
   6. Where grounding conductors are not concrete-encased or direct buried, install in Schedule 40 PVC conduit for protection.
   7. Install grounding system at each structure where switchgear, motor control centers, switchboards, panelboards, panels, or other electrical equipment are installed.

L. Shield grounding:
   1. Analog signal cables shields shall only be grounded at a single point in the loop. Unless otherwise noted, ground signal cable shields at control panel.
   2. For communication and data line signal cable shields and drain wires should be grounded at both ends of the cable run.
   3. Insulate the shielding and exposed drain wire for each signal cable with heat-shrink tubing.
   4. Terminate the signal cable shield on a dedicated grounding terminal block.

M. Where indicated on the Drawings, install ground rods in precast ground wells.

3.4 ERECTION, INSTALLATION, APPLICATION, CONSTRUCTION (NOT USED)

3.5 REPAIR/RESTORATION (NOT USED)

3.6 RE-INSTALLATION (NOT USED)

3.7 COMMISSIONING (NOT USED)

3.8 FIELD QUALITY CONTROL

A. As specified in the Common Work Results for Electrical section.

B. Measure grounding electrode system resistance to ground in accordance with IEEE 81.

3.9 ADJUSTING

A. Under the direction of the Engineer, add additional parallel connected ground rods and/or deeper driven rods until the ground resistance measurement meets the specified resistance requirements:
   1. Use of salts, water, or compounds to attain the specified ground resistance is not acceptable.

3.10 CLEANING (NOT USED)

3.11 PROTECTION

A. As specified in Section 16050 - Common Work Results for Electrical.

3.12 SCHEDULES (NOT USED)

END OF SECTION

SECTION 260700

HANGERS AND SUPPORTS

PART 1 GENERAL

1.1 SUMMARY

A. Section includes:
1. Mounting and supporting electrical equipment and components.

1.2 REFERENCES

A. As specified in the Common Work Results for Electrical section.

B. ASTM International (ASTM):
1. A123 - Standard Specification for Zinc (Hot-Dip Galvanized) Coatings on Iron and Steel Products.
2. A153 - Standard Specification for Zinc Coating (Hot-Dip) on Iron and Steel Hardware.
3. A240 - Standard Specification for Chromium and Chromium-Nickel Stainless Steel Plate, Sheet, and Strip for Pressure Vessels and for General Applications.

1.3 DEFINITIONS

A. As specified in the Common Work Results for Electrical section.

1.4 SYSTEM DESCRIPTION

A. Design requirements:
1. Demonstrate the following using generally accepted engineering methods:
a. That the anchors to the structure are adequate to resist the loads generated in accordance with the Building Code and equipment requirements.
b. That the required load capacity of the anchors can be fully developed in the structural materials to which they are attached.
2. Design loading and anchoring requirements:
a. As indicated in the Building Code unless otherwise specified.
b. Seismic loading requirements:
1) Freestanding, suspended, or wall-hung equipment shall be anchored in place by methods that will satisfy the requirements for the seismic design specified in the Common Work Results for Electrical section.
c. Wind loading requirements:
1) All exterior equipment shall be anchored in place by methods that will satisfy the requirements for wind design specified in the Common Work Results for Electrical section.
d. Minimum safety factor against overturning: 1.5.
e. The foundation and structures to which hangers and supports are attached shall be capable of withstanding all anchor loads.

B. Performance requirements:
1. Hangers and supports individually and as a system shall resist all weights and code-required forces without deflections and deformations that would damage the supporting elements, the equipment supported, or the surrounding construction.

1.5 SUBMITTALS

A. Furnish submittals as specified in the Submittal Procedures section and the Common Work Results for Electrical section.

B. Product data:
   1. Supports:
      a. Materials.
      b. Geometry.
      c. Manufacturer.
   2. Hardware:
      a. Materials.
      b. Manufacturer.

C. Shop drawings:
   1. Complete dimensioned and scalable shop drawings of all supporting structures, trapezes, wall supports, etc.
   2. Complete anchoring details for equipment, lighting and raceway, supporting structures, trapezes, and wall supports for all equipment:
      a. For free standing supports and wall supports supporting equipment weight in excess of 200 pounds:
         1) Stamped by a professional engineer licensed in the state where the Project is being constructed.
      b. Said submittals, by virtue of the fact that they bear the stamp of a registered engineer, will be reviewed for general consistency with the requirements specified in the Contract Documents, but not for context, accuracy, or method of calculation.
   3. Include data on attachment hardware and construction methods that will satisfy the design loading and anchoring criteria.

D. Installation instructions:
   1. Furnish anchorage instructions and requirements based on the seismic and wind conditions of the Site:
      a. Stamped by a professional engineer licensed in the state where the Project is being constructed.

1.6 QUALITY ASSURANCE

A. As specified in the Common Work Results for Electrical section.

1.7 DELIVERY, STORAGE, AND HANDLING

A. As specified in the Common Work Results for Electrical section.

1.8 PROJECT OR SITE CONDITIONS

A. As specified in the Common Work Results for Electrical section.

1.9 SEQUENCING (NOT USED)

1.10 SCHEDULING (NOT USED)

1.11 WARRANTY

A. As specified in the Common Work Results for Electrical section.

1.12 SYSTEM STARTUP

A. As specified in the Common Work Results for Electrical section.

1.13 OWNER'S INSTRUCTIONS (NOT USED)

1.14 MAINTENANCE (NOT USED)

PART 2 - PRODUCTS

2.1 MANUFACTURERS

A. One of the following or equal:
   1. Preformed channel:
      a. Thomas & Betts.
      b. Power-Strut.
      c. Unistrut.
      d. Cooper B-Line.
      e. Robroy.
      f. Tyco.

B. Nonmetallic cable rack:
   1. Underground Devices Inc.
   2. Hubbell.
   3. Unistrut.

2.2 EXISTING PRODUCTS (NOT USED)

2.3 MATERIALS

A. Use materials appropriate for the area as specified in the Common Work Results for Electrical section.

B. Preformed channel:
   1. Stainless steel:
      a. Supports:
         1) In accordance with ASTM A240.
         2) ANSI Type 316 material.
      b. Hardware:
         1) ANSI Type 316 material.

C. Non-metallic cable rack:
   1. Consists of stanchions and cable support arms.
   2. Stanchions:
      a. 50 percent glass reinforced nylon or other non-metallic material.
      b. Capable of supporting multiple arms.
      c. Recessed bolt mounting holes.
      d. Length as required.
   3. Arms:
      a. 50 percent glass reinforced nylon or other non-metallic material.
      b. Size the arms based on the length and weight of the cable to be supported.
   4. Stainless steel mounting hardware.

2.4 MANUFACTURED UNITS (NOT USED)

2.5 EQUIPMENT (NOT USED)

2.6 COMPONENTS (NOT USED)

2.7 ACCESSORIES (NOT USED)

2.8 MIXES (NOT USED)

2.9 FABRICATION (NOT USED)

2.10 FINISHES (NOT USED)

2.11 SOURCE QUALITY CONTROL (NOT USED)

PART 3 - EXECUTION

3.1 EXAMINATION (NOT USED)

3.2 PREPARATION (NOT USED)

3.3 INSTALLATION

A. As specified in the Common Work Results for Electrical section.

B. Preformed Channel:
   1. Mount all raceways, cabinets, boxes, fixtures, instruments, and devices on Contractor-fabricated racks unless otherwise indicated on the Drawings.
      a. Provide the necessary sway bracing to keep trapeze type structures from swaying under seismic events or wind loading.
   2. Brace and anchor freestanding equipment supports using methods that provide structural support based on the seismic loads and wind loads:
      a. Lateral deflection at top of supports not to exceed support height divided by 240 unless otherwise approved by the Engineer.
   3. Provide fabricated steel support pedestals for wall mounted panels that weigh more than 200 pounds:
      a. Fabricate pedestals out of welded angle, tube sections, or preformed channel.
      b. If the supported equipment is a panel or cabinet, match the supported equipment in physical appearance and dimensions.
      c. Provide auxiliary floor supports for transformers hung from stud walls and weighing more than 200 pounds.
   4. Mount all equipment, cabinets, boxes, instruments, and devices in damp or wet locations on minimum of 7/8-inch preformed mounting channel.
      1) Mount channel vertically along the length of the device so that water or moisture may run freely behind the device.
   5. Corrosion protection:
      a. Isolate dissimilar metals, except where required for electrical continuity.
         1) Use neoprene washers, 9-mil polyethylene tape, or gaskets for isolation.
   6. Raceway:
      a. Furnish all racks and trapeze structures needed to support the raceway from the structure.
         1) Group raceway and position on racks to minimize crossovers.
         2) Provide the necessary bracing to keep trapeze type structures from swaying under loads from cable installation, seismic forces, or wind forces.
   7. Anchoring methods:

a. Solid concrete: Anchor bolts, anchor rods or post-installed anchors.
b. Metal surfaces: Machine screws or bolts.
c. Hollow masonry units: Post-installed anchors.

8. When supporting devices on metal or wood stud construction, bridge studs with preformed channel, and mount the devices to the channel.
9. Recoat or seal all drilled holes, cut or scratched surfaces or with products recommended by the manufacturer.

C. Non-metallic cable rack:
1. Install the non-metallic cable rack in accordance with the manufacturer's recommendations.
2. Provide at least 2 stanchions and 2 arms at each installation.
3. Mount the cable rack so that the supported cable does not interfere with access to manhole or handhole and so that the supported cable does not lie on the floor.
4. Do not exceed the cable manufacturer's minimum bending radius.
5. Use nylon cable ties to secure the cable to the supports.

3.4 ERECTION, INSTALLATION, APPLICATION, CONSTRUCTION (NOT USED)

3.5 REPAIR/RESTORATION (NOT USED)

3.6 RE-INSTALLATION (NOT USED)

3.7 COMMISSIONING (NOT USED)

3.8 FIELD QUALITY CONTROL

A. As specified in the Common Work Results for Electrical section.

3.9 ADJUSTING (NOT USED)

3.10 CLEANING (NOT USED)

3.11 PROTECTION

A. As specified in the Common Work Results for Electrical section.

3.12 SCHEDULES (NOT USED)

END OF SECTION

THIS PAGE INTENTIONALLY LEFT BLANK FOR DOUBLE SIDED PRINTING

SECTION 260750

IDENTIFICATION FOR ELECTRICAL SYSTEMS

PART 1 GENERAL

1.1 SUMMARY

A. Section includes:
1. Identification of electrical equipment, devices and components.
2. Material, manufacturing and installation requirements for identification devices.

1.2 REFERENCES

A. As specified in the Common Work Results for Electrical section.

B. Occupational Safety and Health Administration (OSHA).

1.3 DEFINITIONS

A. As specified in the Common Work Results for Electrical section.

1.4 SYSTEM DESCRIPTION

A. Nameplates:
1. Provide a nameplate for each piece of electrical equipment and devices, control panel and control panel components.
2. Provide all nameplates of identical style, color, and material throughout the facility.
3. Device nameplates information:
a. Designations as indicated on the Drawings and identified on the Process and Instrumentation Drawings.

B. Wire numbers:
1. Coordinate the wire numbering system with all vendors of equipment so that every field wire has a unique number associated with it for the entire system:
a. Wire numbers shall correspond to the wire numbers on the control drawings or the panel and circuit numbers for receptacles and lighting.
b. Wire numbers shall correspond to the terminal block number to which they are attached in the control panel.
c. Internal panel wires on a common terminal shall have the same wire number.
d. Multi-conductor cables shall be assigned a cable number that shall be attached to the cable at intermediate pull boxes and stub-up locations beneath freestanding equipment. All multi-conductor and instrumentation cables shall be identified at pull points as described above:
1) Label armored multi-conductor cable using the conduit number as indicated on the Drawings, following the requirements for conduit markers in the Conduits section.
2. Provide the following wiring numbering schemes throughout the project for field wires between process control module, (PCM), vendor control panels, (VCP), motor control centers, (MCC), field starters, field instruments, etc.



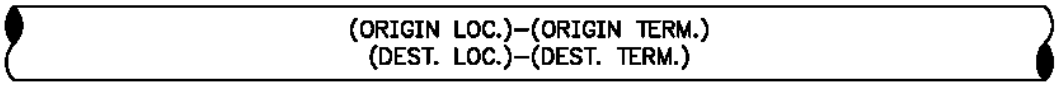

OR

a. Where:
   1) ORIGIN LOC.= Designation for originating panel or device
   2) ORIGIN TERM. = Terminal designation at originating panel or device
   3) DEST. LOC. = Designation for destination panel or device
   4) DEST. TERM. = Terminal designation at destination panel or device or PLC
   5) I/O address at destination panel:
      a) Identify equipment and field instruments as the origin.
      b) PCMs are always identified as the destination.
      c) Location is the panel designation for VCP, LCP, or PCM. For connections to MCCs, location is the specific starter tag and loop number. Location is the tag and loop number for motor starters, field instruments and equipment. Any hyphen in the panel designation or tag and loop number shall be omitted.
      d) Terminal designation is the actual number on the terminal block where the conductor terminates at field devices and vendor control panels. For multi-conductor cables, all terminal numbers shall be shown, separated by commas.
      e) Terminal designations at motor leads shall be the motor manufacturer's standard terminal designation (e.g. T1, T2, T3, etc.).
      f) Terminal designations at PCMs where the field conductor connects to field terminal blocks for a PLC input or output shall be the PLC address (Note: the following PLC I/O numbering scheme is typical for Allen-Bradley, the numbering scheme should be modified to match that of the actual PLC manufacturer used for the project):

         (1) Discrete Point: W:X:Y/Z.

3. Analog Point: W:X:Y.Z.
   a. Where:
      1) W= I for input, O for output
      2) X= PLC number (1, 2, 3…)
      3) Y= Slot number (01, 02, 03…)
      4) Z= Terminal number (00, 01, 02…) for a discrete point or a word number for an analog point (1, 2, 3…)
   b. Terminal designations at PCMs where the conductor does not connect to a PLC I/O point shall be the terminal number with a "C" prefix (e.g. C0010). For common power after a fuse or neutrals after a switch, the subsequent points shall have and capital letter suffix starting with "A" (e.g. C0010A).

4. Case 1: Vendor control panel (VCP) to process control module (PCM):
    a. Field wire number/label: A-B/C-D
    b. A = Vendor control panel number without hyphen (VCP#)
    c. B = Terminal number within VCP (manufacturer's or vendor's standard terminal number)
    d. C = Process control module number without hyphen (PCM#)
    e. D = Either the PLC address if the field terminal is connected directly to a PLC input or output point or the terminal number with a "C" prefix if not connected directly to a PLC I/O point (C0010)
    f. Examples:
        1) VCP#-10/PCM#-I: 1:01/01
        2) VCP#-10/PCM#-O: 1:10/07
        3) VCP#-10/PCM#-C0100

5. Case 2: Field instrument to process control module (PCM):
    a. Field wire number/label: E-F/C-D
    b. C = Process control module number without hyphen (PCM#)
    c. D = Either the PLC address if the field terminal is connected directly to a PLC input or output point or the terminal number with a "C" prefix if not connected directly to a PLC I/O point (C0010)
    d. E = Field mounted instrument tag and loop numbers without hyphen (EDV#)
    e. F = Manufacturer's standard terminal number within instrument. Use both terminal numbers for analog points separated by a comma
    f. Examples:
        1) TIT#-2,3/PCM#-I: 1:01.1
        2) TSH#-1/PCM#-I: 2:01/00

6. Case 3: Motor control center (MCC) to process control module (PCM):
    a. Field wire number/label: G-B/C-D
    b. B =Terminal number within Motor Control Center (manufacturer's or vendor's standard terminal number)
    c. C = Process control module without hyphen (PCM#)
    d. D = Either the PLC address if the field terminal is connected directly to a PLC input or output point or the terminal number with a "C" prefix if not connected directly to a PLC I/O point (C0010)
    e. G = Actual starter designation in the motor control center without hyphen (MMS#)
    f. Examples:
        1) MMS#-10/PCM#-I: 1:01/01
        2) MMS#-10/PCM#-O: 1:10/07
        3) MMS#-10/PCM#-C0100

7. Case 4: Motor control center (MCC) to vendor control panel (VCP):
    a. Field wire number/label: G-B/A-B
    b. A = Vendor control panel number without hyphen (VCP#)
    c. B = Terminal number within motor control center or vendor control panel (manufacturer's or vendors standard terminal number)
    d. G = Actual starter designation in the motor control center without hyphen (MMS#)
    e. Example: MMS#-X2/VCP#-10

8. Case 5: Motor leads to a motor control center (MCC):
    a. Field wire number/label: H-I/G-B
    b. B = Terminal number within motor control center (manufacturer's standard terminal number)
    c. G = Actual starter designation in the motor control center without hyphen (MMS#)
    d. H = Equipment tag and loop number without hyphen (PMP#)
    e. I = Motor manufacturer's standard motor lead identification (e.g. T1, T2, T3, etc.)
    f. Example: PMP-#-T3/MMS#-T3

9. Identify all spare conductors as required for other field wires with an “S” prefix:
    a. Example: S MMS#-10/PCM#-C011

1.5 SUBMITTALS

A. Furnish submittals as specified in the Submittal Procedures section and the Common Work Results for Electrical section.

B. Product data:
1. Nameplates:
    a. Color.
    b. Size:
        1) Outside dimensions.
        2) Lettering.
    c. Material.
    d. Mounting means.
2. Nameplate schedule:
    a. Show exact wording for each nameplate.
    b. Include nameplate and letter sizes.
3. Wire numbers:
    a. Manufacturer’s catalog data for wire labels and label printer.

C. Record documents:
1. Update the conduit schedule to reflect the exact quantity of wire numbers including spares and destination points for all wires.

1.6 QUALITY ASSURANCE (NOT USED)

1.7 DELIVERY, STORAGE, AND HANDLING

A. As specified in the Common Work Results for Electrical section.

1.8 PROJECT SITE CONDITIONS (NOT USED)

1.9 SEQUENCING (NOT USED)

1.10 SCHEDULING (NOT USED)

1.11 WARRANTY

A. As specified in the Common Work Results for Electrical section.

1.12 SYSTEM START-UP

A. As specified in the Common Work Results for Electrical section.

1.13 OWNER’S INSTRUCTIONS (NOT USED)

1.14 MAINTENANCE (NOT USED)

PART 2 - PRODUCTS

2.1 MANUFACTURERS

A. Nameplates and signs:
   1. One of the following or equal:
      a. Brady.
      b. Seton.

B. Conductor and cable markers:
   1. Heat-shrinkable tubing:
      a. One of the following or equal:
         1) Raychem.
         2) Brady.
         3) Thomas & Betts.
         4) Kroy.
   2. Non heat-shrinkable tubing:
      a. One of the following or equal:
         1) Brady.
         2) Seton.
   3. Pre-printed slip-on sleeve markers:
      a. The following or equal: Engineer knows of no equal.
         1) Grafoplast.

2.2 EXISTING PRODUCTS (NOT USED)

2.3 MATERIALS

A. Nameplates:
   1. Colors:
      a. Warning nameplates: White-center, red face.
      b. Other nameplates: Black-center, white face.
   2. Laminated plastic engraving stock:
      a. 3/32-inch thick material.
      b. 2-ply.
      c. With chamfered edges.
   3. Block style engraved characters of adequate size to be read easily from a distance of 6 feet:
      a. No characters smaller than 1/8-inch in height.

B. Signs:
   1. Automatic equipment and high voltage signs:
      a. Suitable for exterior use.
      b. In accordance with OSHA regulations.

C. Conductor and cable markers:
   1. Machine printed black characters on white tubing.
   2. 10-point type or larger.

2.4 MANUFACTURED UNITS (NOT USED)

2.5 EQUIPMENT (NOT USED)

2.6 COMPONENTS (NOT USED)

2.7 ACCESSORIES (NOT USED)

2.8 MIXES (NOT USED)

2.9 FABRICATION (NOT USED)

2.10 FINISHES (NOT USED)

2.11 SOURCE QUALITY CONTROL

A. Nameplates:
1. Provide all nameplates for control panel operator devices (e.g. pushbuttons, selector switches, pilot lights, etc.):
a. Same material and same color and appearance as the device nameplates, in order to achieve an aesthetically consistent and coordinated system.

PART 3 - EXECUTION

3.1 EXAMINATION (NOT USED)

3.2 PREPARATION (NOT USED)

3.3 INSTALLATION

A. As specified in the Common Work Results for Electrical section.

B. Nameplates:
1. Attach nameplates to equipment with rivets, bolts or sheet metal screws, approved waterproof epoxy-based cement or install in metal holders welded to the equipment.
2. On NEMA Type 4, NEMA Type 4X, or NEMA Type 7 enclosures, use epoxy-based cement to attach nameplates.
3. Nameplates shall be aligned and level or plumb to within 1/64 inch over the entire length:
a. Misaligned or crooked nameplates shall be remounted, or provide new enclosures at the discretion of the Engineer.

C. Conductor and cable markers:
1. Apply all conductor and cable markers before termination.
2. Non heat-shrinkable tubing:
a. Tubing shall be sized for the wire and insulation on which it is to be placed.
b. Tubing shall be tight on the wire.
c. Characters shall face the open panel and shall read from left to right or top to bottom.
d. Marker shall start within 1/32 inch of the end of the stripped insulation point.

D. Signs and labeling:
1. Furnish and install permanent warning signs at mechanical equipment that may be started automatically or from remote locations:
a. Fasten warning signs with round head stainless steel screws or bolts.
b. Locate and mount in a manner to be clearly legible to operations personnel.
2. Furnish and install permanent and conspicuous warning signs on equipment (front and back), doorways to equipment rooms, pull boxes, manholes, etc. where the voltage exceeds 600 volts.
3. Furnish and install warning signs on equipment that has more than one source of power.
a. Warning signs to identify every panel and circuit number of the disconnecting means of all external power sources.

4. Place warning signs on equipment that has 120 VAC control voltage sources used for interlocking.
    a. Identify panel and circuit number or conductor tag for control voltage source disconnecting means.

3.4 ERECTION, INSTALLATION, APPLICATION, CONSTRUCTION (NOT USED)

3.5 REPAIR/RESTORATION (NOT USED)

3.6 RE-INSTALLATION (NOT USED)

3.7 COMMISSIONING (NOT USED)

3.8 FIELD QUALITY CONTROL

A. Replace any nameplates, signs, conductor markers, cable markers or raceway labels that in the sole opinion of the Engineer do not meet the Engineer's aesthetic requirements.

3.9 ADJUSTING (NOT USED)

3.10 CLEANING (NOT USED)

3.11 PROTECTION (NOT USED)

3.12 SCHEDULES (NOT USED)

END OF SECTION

THIS PAGE INTENTIONALLY LEFT BLANK FOR DOUBLE SIDED PRINTING

SECTION 261230

600-VOLT OR LESS WIRES AND CABLES

PART 1 - GENERAL

1.1 SUMMARY

A. Section includes:
   1. 600 volt class or less wire and cable.

1.2 REFERENCES

A. As specified in the Common Work Results for Electrical section.

B. ASTM International (ASTM):
   1. B3 - Standard Specification for Soft or Annealed Copper Wire.
   2. B8 - Standard Specification for Concentric-Lay-Stranded Copper Conductors, Hard, Medium-Hard, or Soft.

C. CSA International (CSA).

D. Insulated Cable Engineers Association (ICEA):
   1. NEMA WC 70/ICEA S-95-658-1999 - Standard for Power Cables Rated 2000 Volts or Less for the Distribution of Electrical Energy.
   2. NEMA WC 57/ICEA S-73-532 - Standard for Control, Thermocouple Extension, and Instrumentation Cables.

E. National Fire Protection Association (NFPA):
   1. 72 - National Fire Alarm and Signaling Code.
   2. 101 - Life Safety Code.

F. Telecommunications Industry Association/Electronics Industry Association (TIA/EIA):
   1. 568-C.2 - Balanced Twisted-Pair Telecommunication Cabling and Components Standard.
   2. 569-B – Commercial Building Standards for Telecommunications Pathways and Spaces.
   3. 1005 – Industrial Cabling Standard.

G. Underwriter's Laboratories Inc., (UL):
   1. 44 - Thermoset-Insulated Wires and Cables.
   2. 1277 - Standard for Electrical Power and Control Tray Cables with Optional Optical-Fiber Members.
   3. 1424 - Standard for Cables for Power-Limited Fire-Alarm Circuits.
   4. 1569 - Standard for Metal-Clad Cables.
   5. 2196 - Standard for Fire Test for Circuit Integrity of Fire-Resistive Power, Instrumentation, Control, and Data Cables.
   6. 2225 - Standard for Cables and Cable-Fittings for Use in Hazardous (Classified) Locations.

1.3 DEFINITIONS

A. As specified in the Common Work Results for Electrical section.

B. Specific definitions and abbreviations:
   1. AWG: American wire gauge.
   2. BCCS: Bare copper-covered steel.
   3. CPE: Chlorinated polyethylene.
   4. FEP: Fluorinated ethylene propylene.
   5. FHDPE: Foam high-density polyethylene.
   6. FPE: Foam polyethylene.
   7. OD: Outside diameter.
   8. PVC: Polyvinyl chloride.
   9. XHHW: Cross-linked high heat water resistant insulated wire.

C. Definitions of terms and other electrical considerations as set forth in the:
   1. ASTM.
   2. ICEA.

1.4 SYSTEM DESCRIPTION

A. Furnish and install the complete wire and cable system.

1.5 SUBMITTALS

A. Furnish submittals as specified in the Common Work Results for Electrical section.

B. Product data:
   1. Manufacturer of wire and cable.
   2. Insulation:
      a. Type.
      b. Voltage class.
   3. AWG size.
   4. Conductor material.
   5. Pulling compounds.

C. Shop drawings:
   1. Show splice locations.
      a. For each proposed splice location provide written justification describing why the splice is necessary.

D. Test reports:
   1. Submit test reports for meg-ohm tests.

E. Calculations:
   1. Submit cable pulling calculations to the Engineer for review and comment for all cables that will be installed using mechanical pulling equipment. Show that the maximum cable tension and sidewall pressure will not exceed manufacturer recommended values:
      a. Provide a table showing the manufacturer’s recommended maximum cable tension and sidewall pressure for each cable type and size included in the calculations.
      b. Submit the calculations to the Engineer a minimum of 2 weeks before conduit installation.

1.6 QUALITY ASSURANCE

A. As specified in the Common Work Results for Electrical section.

B. All wires and cables shall be UL listed and labeled.

1.7 DELIVERY, STORAGE, AND HANDLING

A. As specified in the Common Work Results for Electrical section.

1.8 PROJECT OR SITE CONDITIONS (NOT USED)

1.9 SEQUENCING (NOT USED)

1.10 SCHEDULING (NOT USED)

1.11 WARRANTY

A. As specified in the Common Work Results for Electrical section.

1.12 SYSTEM START-UP

A. As specified in the Common Work Results for Electrical section.

1.13 OWNER`S INSTRUCTIONS (NOT USED)

1.14 MAINTENANCE (NOT USED)

PART 2 - PRODUCTS

2.1 MANUFACTURERS

A. One of the following or equal:
   1. 600 volt class wire and cable:
      a. General Cable.
      b. Okonite Co.
      c. Southwire Co.
      d. Service Wire.
   2. Instrumentation class wire and cable:
      a. Alpha Wire Co.
      b. Belden CDT.
      c. General Cable.
      d. Okonite Co.
      e. Rockbestos Surprenant Cable Corp.
   3. Network cables:
      a. General Cable.
      b. Belden.
      c. CommScope.

2.2 EXISTING PRODUCTS (NOT USED)

2.3 MATERIALS

A. Conductors:
   1. Copper in accordance with ASTM B3.

2.4 MANUFACTURED UNITS

A. General:
   1. Provide new wires and cables manufactured within 1 year of the date of delivery to the Site.
   2. Permanently mark each wire and cable with the following at 24-inch intervals:
      a. AWG size.
      b. Voltage rating.
      c. Insulation type.
      d. UL symbol.
      e. Month and year of manufacture.
      f. Manufacturer's name.
   3. Identify and mark wire and cable as specified in the Identification for Electrical Systems section:
      a. Use integral color insulation for #2 AWG and smaller wire.
      b. Wrap colored tape around cable larger than #2 AWG.

B. 600 volt class wire and cable:
   1. Provide AWG or kcmil sizes as indicated on the Drawings:
      a. When not indicated on the Drawings, size wire as follows:
         1) In accordance with the NEC:
            a) Use 75 degree Celsius ampacity ratings.
            b) Ampacity rating after all derating factors, equal to or greater than rating of the overcurrent device.
         2) Provide #12 AWG minimum for power conductors.
         3) Provide #14 AWG minimum for control conductors.
   2. Provide Class B stranding in accordance with ASTM B8:
      a. Provide Class C stranding where extra flexibility is required.
   3. Insulation:
      a. XHHW-2.
      b. 90 degree Celsius rating.
   4. Multiconductor cables:
      a. Number and size of conductors as indicated on the Drawings.
      b. Individual conductors with XHHW-2 insulation.
      c. Overall PVC jacket.
      d. Tray cable rated.
      e. Color-coding for control wire in accordance with ICEA Method 1, E-2 in accordance with NEMA WC 57/ICEA S-73-532.
      f. Ground conductor: Insulated, green:
         1) Sized in accordance with NEC.

C. Instrumentation class cable:
   1. Type TC.
   2. Suitable for use in wet locations.
   3. Voltage rating: 600 volts.
   4. Temperature rating:
      a. 90 degree Celsius rating in dry locations.
      b. 75 degree Celsius rating in wet locations.
   5. Conductors:
      a. Insulation:
         1) Flame-retardant PVC, 15 mils nominal thickness, with nylon jacket 4 mils nominal thickness.

b. #16 AWG stranded and tinned.
c. Color code: ICEA Method 1:
1) Pair: Black and white.
2) Triad: Black, white and red.
3) Multiple pairs or triads:
a) Color-coded and numbered.

6. Drain wire:
a. #18 AWG.
b. Stranded, tinned.
7. Jacket:
a. Flame retardant, moisture and sunlight resistant PVC.
b. Ripcord laid longitudinally under jacket to facilitate removal.
8. Shielding:
a. Individual pair/triad:
1) Minimum 1.35-mil double-faced aluminum foil-polyester tape overlapped to provide 100 percent coverage.
b. Multiple pair or triad shielding:
1) Group shield: Minimum 1.35-mil double-faced aluminum foil-polyester tape overlapped to provide 100 percent coverage.
2) Completely isolate group shields from each other.
3) Cable shield: 2.35 mils double-faced aluminum and synthetic polymer backed tape overlapped to provide 100 percent coverage.
c. All shielding to be in contact with the drain wire.

D. Network cables:
1. Category 5e:
a. General:
1) Provide Cat 5e cables meeting the standards set by TIA/EIA-568-C.2 and verified by third-party testing laboratory.
b. Conductors:
1) #24 AWG solid bare annealed copper.
c. Insulation:
1) Polyolefin.
2) 4 non-bonded twisted pair cables formed into a cable core.
d. Shielding: None.
e. Color code (T568B):
1) Pair 1: White/blue stripe and blue.
2) Pair 2: White/orange stripe and orange.
3) Pair 3: White/green stripe and green.
4) Pair 4: White/brown stripe and brown.
f. Outer jacket:
1) PVC with ripcord.
g. Electrical characteristics
1) Voltage rating: 600VAC.

2.5 EQUIPMENT (NOT USED)

2.6 COMPONENTS (NOT USED)

2.7 ACCESSORIES

A. Wire ties:

1. One of the following or equal:
    a. T&B, "Ty-Rap" cable ties.
    b. Panduit, cable ties.

B. Wire markers:
    1. As specified in the Identification for Electrical Systems section.

2.8 MIXES (NOT USED)

2.9 FABRICATION (NOT USED)

2.10 FINISHES (NOT USED)

2.11 SOURCE QUALITY CONTROL

A. Assembly and testing of cable shall comply with the applicable requirements of ICEA S-95-658-1999.

B. Test Type XHHW-2 in accordance with the requirements of UL 44.

PART 3 EXECUTION

3.1 EXAMINATION (NOT USED)

3.2 PREPARATION (NOT USED)

3.3 INSTALLATION

A. As specified in the Common Work Results for Electrical section.

B. Color-coding:
    1. Color-coding shall be consistent throughout the facility.
    2. The following color code shall be followed for all 240/120 volt and 208/120 volt systems:
        a. Phase A: Black.
        b. Phase B: Red.
        c. Phase C: Blue.
        d. Single phase system: Black for 1 hot leg, red for the other.
        e. Neutral: White.
        f. High phase or wild leg: Orange.
        g. Equipment ground: Green.
    3. The following color code shall be followed for all 480/277 volt systems:
        a. Phase A: Brown.
        b. Phase B: Orange.
        c. Phase C: Yellow.
        d. Neutral: Gray.
        e. Equipment ground: Green.
    4. The following color code shall be followed for all 120 VAC control wiring:
        a. Power: Red.
        b. Neutral: White.
    5. The following color code shall be followed for all general purpose DC control circuits:
        a. Grounded conductors: White with blue stripe.

b. Ungrounded conductors: Blue.
6. Switch legs shall be violet. 3-way switch runners shall be pink.
7. Wires in intrinsically safe circuits shall be light blue.
8. Wire colors shall be implemented in the following methods:
   a. Wires manufactured of the desired color.
   b. Continuously spiral wrap the first 6 inches of the wire from the termination point with colored tape:
      1) Colored tape shall be wrapped to overlap 1/2 of the width of the tape.

C. Install conductors only after the conduit installation is complete, and all enclosures have been vacuumed clean, and the affected conduits have been swabbed clean and dry:
   1. Install wires only in approved raceways.
   2. Do not install wire:
      a. In incomplete conduit runs.
      b. Until after the concrete work and plastering is completed.

D. Properly coat wires and cables with pulling compound before pulling into conduits:
   1. For all #4 AWG and larger, use an approved wire-pulling lubricant while cable is being installed in conduit:
      a. Ideal Products.
      b. Polywater Products.
      c. 3M Products.
      d. Greenlee Products.
      e. Or equal as recommended by cable manufacturer.
      f. Do not use oil, grease, or similar substances.

E. Cable pulling:
   1. Prevent mechanical damage to conductors during installation.
   2. For cables #1 AWG and smaller, install cables by hand.
   3. For cables larger than #1 AWG, power pulling winches may be used if they have cable tension monitoring equipment.
   4. Provide documentation that maximum cable pulling tension was no more than 75 percent of the maximum recommended level as published by the cable manufacturer. If exceeded, the Engineer may, at his discretion, require replacement of the cable.
   5. Ensure cable pulling crews have all calculations and cable pulling limitations while pulling cable.
   6. Make splices or add a junction box or pullbox where required to prevent cable pulling tension or sidewall pressure from exceeding 75 percent of manufacturer’s recommendation for the specified cable size:
      a. Make splices in manholes or pull boxes only.
      b. Leave sufficient slack to make proper connections.

F. Use smooth-rolling sheaves and rollers when pulling cable into cable tray to keep pulling tension and bending radius within manufacturer’s recommendations.

G. Install and terminate all wire in accordance with manufacturer's recommendations.

H. Neatly arrange and lace conductors in all switchboards, panelboards, pull boxes, and terminal cabinets by means of wire ties:
   1. Do not lace wires in gutter or panel channel.
   2. Install all wire ties with a flush cutting wire tie installation tool:
      a. Use a tool with an adjustable tension setting.
   3. Do not leave sharp edges on wire ties.

I. Terminate stranded conductors on equipment box lugs such that all conductor strands are confined within the lug:
   1. Use ring type lugs if box lugs are not available on the equipment.

J. Lighting circuits:
   1. Each circuit shall have a dedicated neutral.

K. Splices:
   1. Provide continuous circuits from origin to termination whenever possible:
      a. Obtain Engineer's approval prior to making any splices.
   2. Lighting and receptacle circuit conductors may be spliced without prior approval from the Engineer.
   3. Where splices are necessary because of extremely long wire or cable lengths that exceed standard manufactured lengths:
      a. Splice box NEMA rating requirements as specified in the Common Work Results for Electrical section.
      b. Make splices in labeled junction boxes for power conductors.
      c. Make splices for control and instrument conductors in terminal boxes:
         1) Provide terminal boards with setscrew pressure connectors, with spade or ring lug connectors.
   4. Power and control conductors routed in common raceways may be spliced in common junction boxes.
   5. Clearly label junction and terminal boxes containing splices with the word "SPLICE LOCATED WITHIN".
   6. Leave sufficient slack at junction boxes and termination boxes to make proper splices and connections. Do not pull splices into conduits.
   7. Install splices with compression type butt splices and insulate using a heat-shrink sleeve:
      a. In NEMA Type 4 or NEMA Type 4X areas, provide heat-shrink sleeves that are listed for submersible applications.
   8. Splices in below grade pull boxes, in any box subject to flooding, and in wet areas shall be made waterproof using:
      a. A heat shrink insulating system listed for submersible applications.
      b. Or an epoxy resin splicing kit.

L. Apply wire markers to all wires at each end after being installed in the conduit and before meg-ohm testing and termination.

M. Instrumentation class cable:
   1. Install instrumentation class cables in separate raceway systems from power cables:
      a. Install instrument cable in metallic conduit within non-dedicated manholes or pull boxes.
      b. Install cable without splices between instruments or between field devices and instrument enclosures or panels.
   2. Do not make intermediate terminations, except in designated terminal boxes as indicated on the Drawings.
   3. Shield grounding requirements as specified in the Grounding and Bonding section.

N. Copper Ethernet cables:
   1. Comply with TIA/EIA-568-C.2.
   2. Pathways:

a. For initial installation, the maximum fill capacity for pathways (i.e. conduit, raceways, trays, baskets) is 40 percent. The maximum fill capacity of 60 percent is allowed to accommodate future additions after initial installation.
b. Conduit should be run in the most direct route possible with no more than two 90 degree bends between pull boxes and serve no more than 3 outlet boxes.

3. Cable bend radius:
   a. Proper cable bend radius control must be maintained throughout the pathways. The bend radius needs to be at a minimum 10 times the cable diameter.
4. Cable pulling:
   a. Provide cable pulling swivel system to prevent winding and tangling of rope and cables during pull.
   b. The maximum pulling tension is not to exceed manufacturer recommendations. Cable installation should not in any way deform the cable jacket.
   c. Do not install bruised, kinked, scored, deformed, or abraded cable. Do not splice cable between termination, tap, or junction points. Remove and discard cable if damaged during installation and replace it with new cable.
5. Cable management:
   a. Organize and manage cables for quick and easy moves, adds and changes.
6. Testing:
   a. All cables and termination hardware shall be 100 percent tested for defects in installation and to verify cabling system performance under installed conditions according to the requirements of TIA/EIA-568-C.1 Section 11.
      1) All pairs of each installed cable shall be verified prior to system acceptance.
      2) Any defect in the cabling system installation including but not limited to cable, connectors, feed through couplers, patch panels, and connector blocks shall be repaired or replaced in order to ensure 100 percent useable conductors in all cables installed.
   b. All twisted-pair copper cable links shall be tested for compliance to the requirements in TIA/EIA/568-C.2 for the appropriate Category of cabling installed.
   c. All cables shall be tested in accordance with the contract documents, TIA/EIA standards, and best industry practice.
   d. The field test equipment shall meet the requirements of TIA/EIA-568-C. The appropriate level III tester shall be used to verify Category 6 cabling.
   e. Visually inspect UTP jacket materials for NRTL certification markings. Inspect cabling terminations in communications equipment rooms for compliance with color-coding for pin assignments, and inspect cabling connections for compliance with TIA/EIA-568-C.1.
   f. Visually inspect cable placement, cable termination, grounding and bonding, equipment and labeling of all components.
   g. Test UTP copper cabling for DC loop resistance, shorts, opens, intermittent faults, and polarity between conductors.
      1) Test operation of shorting bars in connection blocks.
      2) Test cables after termination but not cross-connection.
         a) Test instruments shall meet or exceed applicable requirements in TIA/EIA-568-C.2.
            (1) Perform tests with a tester that complies with performance requirements in "Test Instruments (Normative)" Annex, complying with measurement accuracy specified in "Measurement Accuracy (Informative)" Annex.
            (2) Use only test cords and adapters that are qualified by test equipment manufacturer for channel or link test configuration.
7. Separation from EMI sources:

a. Comply with TIA/EIA-569-B recommendations for separating unshielded copper voice and data communication cable from potential EMI sources, including electrical power lines and equipment.
b. Separation between open communications cables or cables in nonmetallic raceways and unshielded power conductors and electrical equipment shall be as follows:
    1) Electrical Equipment Rating Less Than 2 kVA: A minimum of 5 inches.
    2) Electrical Equipment Rating between 2 and 5 kVA: A minimum of 12 inches.
    3) Electrical Equipment Rating More Than 5 kVA: A minimum of 24 inches
c. Separation between communications cables in grounded metallic raceways and unshielded power lines or electrical equipment shall be as follows:
    1) Electrical Equipment Rating Less Than 2 kVA: A minimum of 2-1/2 inches.
    2) Electrical Equipment Rating between 2 and 5 kVA: A minimum of 6 inches.
    3) Electrical Equipment Rating More Than 5 kVA: A minimum of 12 inches.
d. Separation between communications cables in grounded metallic raceways and power lines and electrical equipment located in grounded metallic conduits or enclosures shall be as follows:
    1) Electrical Equipment Rating Less Than 2 kVA: No requirement.
    2) Electrical Equipment Rating between 2 and 5 kVA: A minimum of 3 inches.
    3) Electrical Equipment Rating More Than 5 kVA: A minimum of 6 inches.
e. Separation between Communications Cables and Electrical Motors and Transformers, 5 kVA or HP and Larger: A minimum of 48 inches.

O. Multi-conductor cable:
1. Where cable is not routed in conduit with a separate ground conductor, use 1 conductor in the cable as a ground conductor:
    a) Use an internal ground conductor, if it is no smaller than as indicated on the Drawings and in accordance with NEC requirements for equipment ground conductor size.
    b) Where 2 parallel cables are used, and the internal ground conductor in each cable does not meet NEC requirements for the combined circuit, use 4-conductor cable, with one of the full-sized conductors serving as ground.

P. Armored cable:
1. Where 2 parallel cables are used, and the internal ground conductor in each cable does not meet NEC requirements for the combined circuit, use 4-conductor cable, with 1 of the full-sized conductors serving as ground.
2. The cable armor is not acceptable as a ground conductor.
3. Where armored cable terminates at a device, switchboard, panel, etc., use armored cable connector.
4. Where armored cable run continues in conduit, strip jacket and armor for portions in conduit, and terminate cable and jacket with an armored cable connector threaded into a coupling or conduit box.

Q. Telephone cable:
1. Install telephone cables in dedicated metallic raceways, including raceways in duct banks, manholes, and pull boxes.

R. Fire alarm cable:
1. Install fire alarm cable in dedicated metallic raceways as indicated on the Drawings.

S. Signal cable:

1. Separate and isolate electrical signal cables from sources of electrical noise and power cables by minimum 12 inches.

T. Submersible cable in wet wells:
   1. Provide Kellem's grip or stainless steel wire mesh to support cable weight and avoid stress on insulation.

U. Wiring allowances:
   1. Equipment locations may vary slightly from the drawings. Include an allowance for necessary conductors and terminations for motorized equipment, electrical outlets, fixtures, communication outlets, instruments, and devices within 10 linear feet of locations indicated on the Drawings.
   2. Locations for pull boxes, manholes, and duct banks may vary slightly from the drawings. Include an allowance for necessary conductors and related materials to provide conductors to all pull boxes, manholes and duct banks within 20 linear feet of locations indicated on the Drawings.

3.4 ERECTION, INSTALLATION, APPLICATION, CONSTRUCTION (NOT USED)

3.5 REPAIR/RESTORATION (NOT USED)

3.6 RE-INSTALLATION (NOT USED)

3.7 COMMISSIONING

3.8 FIELD QUALITY CONTROL

A. As specified in the Common Work Results for Electrical section.

B. Grounding:
   1. As specified in the Grounding and Bonding section.

3.9 ADJUSTING (NOT USED)

3.10 CLEANING (NOT USED)

3.11 PROTECTION

A. As specified in the Common Work Results for Electrical section.

3.12 SCHEDULES (NOT USED)

END OF SECTION

THIS PAGE INTENTIONALLY LEFT BLANK FOR DOUBLE SIDED PRINTING

SECTION 261250

FIBER OPTIC CABLE AND APPURTENANCES

PART 1 GENERAL

1.1 SUMMARY

A. Section includes:
   1. Fiber optic cable.
   2. Fiber splices and terminations.
   3. Accessories.

B. Furnish a complete fiber optic network as indicated on the Drawings.

1.2 REFERENCES

A. As specified in the Common Work Results for Electrical section.

B. Bellcore Standards:
   1. GR-409, “Generic Requirements for Indoor Fiber.”

C. Electronic Industry Association (EIA) 455B "Standard Test Procedure for Fiber Optic Fibers, Cables, Transducers, Sensors, Connecting and Terminating Devices, and Other Fiber Optic Components":
   1. FOTP-25 - Impact testing of Fiber Optic Cables and Cable Assemblies.
   2. FOTP-33 - Fiber Optic Cable Tensile Loading and Bending Test.
   3. FOTP-41 - Compressive Loading Resistance of Fiber Optic Cables.
   4. FOTP-81 - Compound Flow (Drip) Test for Filled Fiber Optic Cable.
   5. FOTP-104 - Fiber Optic Cable Cyclic Flexing Test.
   6. FOTP-181 - Lightning Damage Susceptibility Test for Fiber Optic Cables with Metallic Components.

D. Insulated Cable Engineer’s Association (ICEA):
   1. S-83-596, “Optic Fiber Premises Distribution Cables.”
   2. S-87-640, “Optic Fiber Outside Plant Communications Cable.”
   3. S-104-696, “Indoor-Outdoor Optic Fiber Cable.”

E. TIA/EIA Standards:
   1. 598 - “Optical Fiber Cable Color Coding.”
   2. 11801 – Information technology – Generic cabling for customer premises.

F. Underwriters Laboratories, Inc. (UL):
   1. 1666 - Test for Flame Propagation Height of Electrical and Optical-Fiber Cables Installed Vertically in Shafts.
   2. 1685 - Vertical-Tray Fire-Propagation and Smoke-Release Test for Electrical and Optical-Fiber Cables.

1.3 DEFINITIONS

A. As specified in the Common Work Results for Electrical section and the Common Work Results for Process Control and Instrumentation Systems section.

B. Specific definition:
   1. N/Cm: Newtons per centimeter.
   2. OTLS: Optical Loss Test Set (Tier 1 test).
   3. OTDR: Optical Time Domain Reflectometer (Tier 2 test).

1.4 SYSTEM DESCRIPTION (NOT USED)

1.5 SUBMITTALS

A. Furnish submittals as specified in the Common Work Results for Electrical section.

B. Product data:
   1. Complete manufacturer's brochures that identify materials and options.
   2. Completed data sheets, including catalog number and source for determining catalog number.
   3. Manufacturer's installation instructions.
   4. Include the following:
      a. Manufacturer's data on testing equipment used on this project.
      b. Manufacturer's specifications and data sheets for all fiber types.
      c. Manufacturer's specifications and data sheets for all connectors, bulkheads, splicing kits, breakout devices, and appurtenances used connecting and terminating the fiber spans.
   5. Catalog data on all testing devices proposed for use plus certifications of accuracy, calibration, and traceability to standards of the NIST.
   6. Manufacturer's test procedures and quality assurance procedures:
      a. After review, the Engineer may require that additional tests be performed before installation.

C. Shop drawings:
   1. Interconnection cabling diagrams for the complete system including every fiber in each cable.
   2. Drawings indicating the locations of all pull boxes including pull box identifiers and lengths.
   3. Submit optical power budget calculations for all fiber segments. Include the following:
      a. Minimum transmit power of active devices.
      b. Minimum receive sensitivity.
      c. Available power, in dBm.
      d. Loss for each segment in dBm, including cable attenuation and connector losses. Use manufacturer's data for cable attenuation, at the wavelength to be used. Assume 0.5 dB per connector.
      e. Demonstrate that remaining power budget at each receiver is equal to or greater than 3.0 dBm.

D. Installation instructions:
   1. Submit a cable pulling and splicing work plan a minimum of 45 days before the planned initiation of cable pulling. The cable pulling and splicing work plan must be approved a minimum of 15 days before pulling cable. Include the following:
      a. Pull tension calculations.
      b. Detailed description of pull operation methods for all conduit runs.
      c. Tools and equipment to be used for cable installation and testing.
      d. Physical location of equipment setup and type.
      e. Exact locations of splice points.
      f. Safety and manual assist cable-pulling operations.
      g. Detailed schedule for pulling and testing cables.
      h. The name and qualifications of the supervisory personnel directly responsible for the installation of the conduit system.

i. Sample fiber optic cable test sheets.
j. All signed test sheet results.

E. Operation and maintenance manuals:
1. Compile completed test reports, instruction manuals, and manufacturer's information into the operating manuals and submitted in accordance with the Operation and Maintenance Data section.

F. Test reports:
1. Submit the results of all specified tests to the Engineer.
2. Submit 3 copies of all test reports showing the results of all tests specified herein or in the Field Electrical Acceptance Tests section:
a. Test forms shall include the following information at a minimum:
1) Test type.
2) Test location.
3) Test date.
4) Wavelength.
5) Index of refraction.
6) Cable identification.
7) Fiber type.
8) Fiber number.
9) Fiber color.
10) Result of the value of the tested parameter.
3. Furnish hard copy and electronic copy for all OTDR traces.
4. Submit certification that the fiber optic cable has passed each testing stage:
a. Submit separate documentation for each testing stage result.

G. Record documents:
1. Furnish updated electrical drawings, network diagrams, and fiber cable block diagrams at the end of construction and submit as Record Drawings.

H. Calculations:
1. Cable pulling calculations for all conduit runs:
a. Indicate on the submittal any additional pull boxes that are required, including pull box identifiers and a written description of the location.

1.6 QUALITY ASSURANCE

A. As specified in the Common Work Results for Electrical section.

B. Furnish all cable and appurtenances manufactured within 1 year of installation.

C. Proof test all optical fibers by the fiber manufacturer at a minimum load of 50 kpsi.

D. Provide 100 percent attenuation testing for all optical fibers:
1. Include with each cable reel the attenuation of each fiber.

E. Provide information on at least 5 successful fiber optic cable installations of comparable size and complexity in the past 3 years with name, address, and telephone number of facility owner, name of project with completion date, and type of conduit system and length of cable pulled.

1.7 DELIVERY, STORAGE, AND HANDLING

A. As specified in the Common Work Results for Electrical section.

B. Package the cable for shipment on wooden reels:
   1. Seal both ends of the cable to prevent the ingress of moisture.
   2. Place fiber cable assemblies on reels such that both cable ends are available for testing.
   3. Weatherproof cable reel markings shall include the following:
      a. Manufacturer.
      b. Date of manufacture.
      c. Shipping date.
      d. Cable identification.
      e. Cable configuration/fiber count.
      f. Cable length.
      g. Gross weight.
      h. Cable test date.
      i. Handling instructions.
      j. Direction to unreel.

1.8 PROJECT OR SITE CONDITIONS

A. As specified in the Common Work Results for Electrical section.

1.9 SEQUENCING

A. Testing:
   1. Perform testing of each fiber in each cable as follows:
      a. At the factory before shipment.
      b. At the project site upon delivery.
      c. After installation, before breakout and terminations.
      d. After installation is complete.
   2. Submit test reports following each set of tests as specified in this Section.

B. Notify the Engineer and Owner a minimum of 15 days before post-installation testing.

1.10 SCHEDULING

A. As specified in the Common Work Results for Electrical section.

1.11 WARRANTY

A. As specified in the Common Work Results for Electrical section.

1.12 SYSTEM START-UP (NOT USED)

1.13 OWNER'S INSTRUCTIONS (NOT USED)

1.14 MAINTENANCE (NOT USED)

PART 2 PRODUCTS

2.1 MANUFACTURERS

A. Acceptable manufacturers are indicated with each component type as listed in the remainder of this specification.

2.2 EXISTING PRODUCTS (NOT USED)

2.3 MATERIALS (NOT USED)

2.4 MANUFACTURED UNITS

A. General fiber cable requirements:
   1. Suitable for the installed environment.
   2. Color-coded fibers according to EIA/TIA-598.
   3. Color-coded buffer tubes according to EIA/TIA-598.
   4. Furnish buffer tubes of a single layer nylon construction or of a material with similar mechanical performance.
   5. Fillers may be included in the cable core to lend symmetry to the cable cross-section where needed.
   6. Apply binders with sufficient tension to secure the buffer tubes to the central member without crushing the buffer tubes:
      a. Provide binders that are:
         1) Non-hygroscopic.
         2) Non-wicking (or rendered so by the flooding compound).
         3) Dielectric with low shrinkage.
   7. Provide a minimum of 1 ripcord under the cable sheath.
   8. Provide the high tensile strength Aramid yarns, Kevlar, and/or fiberglass helically stranded evenly around the cable core:
      a. No metallic elements whatsoever are allowed in non-armored cable.
   9. The jacket or sheath shall be free of holes, splits, and blisters.
   10. Mark the jacket or sheath with:
      a. Manufacturer's name.
      b. The words "Optical Cable”.
      c. Year of manufacture.
      d. Sequential meter marks.
      e. Repeat markings every 1-meter.
      f. The actual length of the cable to be within 1 percent of the length marking.
      g. The marking must be in a contrasting color to the cable jacket.
      h. The height of the marking:
         1) Approximately 2.5 millimeters.
   11. The shipping, storage, and operating temperature range of the cable shall be -40 degrees Celsius to +70 degrees Celsius.
   12. General performance characteristics:
      a. The rated tensile load of the cables:
         1) Indoor/outdoor:
            a) Short term: 1,330 N.
            b) Long term: 400 N.
      b. Non-armored fiber optic cables: Compressive load withstand of 220 N/cm applied uniformly over the length of the cable.
      c. Armored fiber optic cables: Compressive load withstand of 440 N/cm applied uniformly over the length of the cable.
      d. The average increase in attenuation for the fibers: Less than or equal to 0.10 dB at 1,550 nm for a cable subjected to this load:
         1) With no measurable increase in attenuation after load removal.
      e. Test in accordance with FOTP-41, "Compressive Loading Resistance of Fiber Optic Cable,” except that the load must be applied at the rate of 3 millimeters to 20 millimeters per minute and maintained for 10 minutes.
      f. Capable of withstanding 25 cycles of mechanical flexing at a rate of 30 within 1 cycles/minute.
      g. The average increase in attenuation for the fibers: Less than or equal to 0.10 dB at 1,550 nm at the completion of the test.

h. For armored cables, any visible cracks causing separation of the armor and propagating more than 5 millimeters constitutes failure.
i. Outer cable jacket cracking or splitting observed under 10X times magnification, constitutes failure.

B. Indoor/outdoor cable:
1. Cable construction:
a. General:
1) Cable type: Indoor/Outdoor - Flame retardant, low smoke, zero halogen, UV resistant.
2) Fiber count: As indicated on the Drawings.
3) Fiber type: As indicated on the Drawings.
4) Buffer tube: Loose tube.
5) Armoring: None.
6) Waterproofing: Water blocking layer.
7) Strength member:
a) Loose tube: Utilize a central, nonmetallic strength member with a coefficient of thermal expansion similar to the fibers as the central anti-buckling member.
8) Approvals and listings: UL 1666 and UL 1685.
9) Design and test criteria: In accordance with ICEA S-104-696.
b. Testing:
1) All fibers in the cable:
a) Proof test of 100 kpsi.
b) Each optical fiber: Bellcore GR-409 strip force testing.
c) No gaps are allowed between the coating material and the buffer material visible under a 50-power microscope.
c. Outer jacket material:
1) Linear low-density polyethylene.
2) Meet all requirements of the NEC for use in all indoor/outdoor areas (excluding plenums) without being enclosed in conduit.
3) Flame retardant OFNR riser rated conforming to UL 1666.
4) Printed with all necessary UL marks and manufacturer identification.
5) Sequential printing of footage in 2-foot increments.
6) With a ripcord incorporated under the cable jacket.

C. Single mode fibers:
1. All fibers in the cable must be usable fibers and meet required specifications.
2. Each optical fiber shall consist of a doped silica core surrounded by a concentric silica cladding.
3. Single mode fiber characteristics:
a. Category: OS2 compliant with ITU-G.657.A1.
b. Jacket color: Yellow

D. Indoor/outdoor:

1. Loose tube:
a. Corning Cable Systems, Freedm®.
b. CommScope, LazrSPEED/TerraSPEED.

2.5 EQUIPMENT (NOT USED)

2.6 COMPONENTS (NOT USED)

2.7 ACCESSORIES

A. Patch cords:
   1. General:
      c. Connector types to match supplied equipment and the patch panel terminations.
      d. Maximum length of patch cords: 25 feet.
      e. Provide 2 spare patch cords (or 1 duplex patch cord) of each type used at each PLC or network cabinet.
      f. Factory assembled and optically tested.
      g. Provide mode-conditioning cords for multimode fibers operating at 1310 nm.
   2. Manufacturers: One of the following or equal:
      h. CommScope.
      i. Corning Cable Systems.

B. Fiber connectors:
   1. As specified in the Control Systems: Network Materials and Equipment section.

C. Fiber optic identification/warning tags:
   1. Black letters on orange or yellow background.
   2. UV resistant polyethylene or other suitable material.
      j. Manufacturers: The following or equal.
         1) Almetek.

2.8 MIXES (NOT USED)

2.9 FABRICATION (NOT USED)

2.10 FINISHES (NOT USED)

2.11 SOURCE QUALITY CONTROL (NOT USED)

PART 3 EXECUTION

3.1 EXAMINATION

A. Verify the condition of the conduit system before installation of the fiber optic cable or inner duct.

B. Pass a test mandrel through all fiber optic conduits prior to pulling fiber or installing inner duct.
   1. Run the mandrel in both directions.

C. Examine all materials and equipment before installation and verify they are free from physical damage and defects.

3.2 PREPARATION

A. Before fiber splicing terminating or testing activities, verify sufficient workspace is available to perform the activity without interferences from other trades.

B. Pre-installation test:
   1. Conduct pre-installation tests on all fiber optic cable.
   2. Upon arrival at the site:
      a. Inspect the cable and reel for damage.
      b. Test all fibers with an optical time domain reflectometer (OTDR) for fiber integrity.
      c. Verify that the fiber lengths are consistent with the cable manufacture.
      d. Verify that all traces yield no point discontinuities.
   3. Complete test sequence and obtain approval from the Engineer of submitted test results before cable installation:
      a. Replace any cable failing to meet the requirements of the required tests and test before installation.
   4. Submit copies of the test results to the Engineer within 5 days after the delivery to the site.

3.3 INSTALLATION

A. As specified in the Common Work Results for Electrical section.

B. Install fiber optic patch cords in open network trays or in dedicated conduits no longer than 25 feet in length.

C. Install all fiber optic system components in accordance with the recommendations of the manufacturer.

D. Install fiber optic cable in continuous lengths without intermediate splices, except where approved by the Engineer.

E. Installation:
   1. Utilize personnel certified by the manufacturer with specific knowledge of the cable manufacturer's recommended procedures:
      a. Schedule Engineer, 5 days before installation, to witness all cable installations.
   2. Properly attach the fiber optic cable’s strength elements to a 600-pound breakaway swivel containing tension or shear pins using Kellums pulling grips that are a minimum of 18 inches long.
   3. Certify that cable tensile limits do not exceed cable pull tension and bend limits using tension monitoring devices.

4. Leave an extra loop of fiber optic cable in each pull box.
5. Conform with the cable manufacturer's specifications, practices, and the following requirements:
    a. When power equipment is used to install fiber optic cables, use low speeds and do not exceed a rate of 30 meters per minute.
    b. Do not exceed the tensile and bending limitation for fiber optic cables under any circumstances.
    c. Use large diameter wheels, pulling sheaves, and cable guides to maintain the specified bending radius.
    d. Use commercial dynamometers or load cells to monitor pulling tension.
    e. A nonfreezing type of swivel inserted between the pulling line and cable pulling grip to prevent twisting under strain.
    f. All cable to be installed using a breakaway swivel.
6. Apply to all conduits a lubricant at each conduit ingress and egress location during the pull operation:
    a. Pour or pump lubricant into the end of the conduit at the feed location at a nominal application rate of 3 gallons per 1,000 feet of cable.
    b. If the conduit is open at intermediate locations, then apply the appropriate proportion of lubricant at each opening.
    c. Continuously lubricate the cable as it is being pulled by pouring or pumping the lubricant into the conduit at the feed location and at each intermediate location.
    d. Station workers at each intermediate location as required.
    e. Remove all excess lubricant that has collected.
    f. Remove and clean the surrounding area after cable installation.
7. Install using a hydraulic capstan or winch equipped with a recording running line dynamometer graph which measures and records pulling tensions:
    a. Use pulling equipment with “slip-load” capability to allow the winch to maintain a constant pulling force without taking up the winch line.
    b. Use pulling equipment equipped with a hydraulic bypass set so that a maximum tension of 600 pounds is not exceeded.
    c. Use only equipment designed to prevent a preset pulling tension from being exceeded.
    d. Fiber optic cable manufacturer to provide the pulling tension setpoint.
    e. If during the pulling operation excessive tension is detected, cease all operations and notify the Engineer.
8. Position the cable reel at the feed point in alignment with the raceway and in such a position that the cable can be passed from the top of the reel in a long, smooth bend into the raceway system:
    a. The use of a cable feeder is required, unless the cable is hand-pulled.
9. Supply all bull wheels, blocks, split wheels, cable feeders, and necessary equipment required to provide a clean and safe operation:
    a. The cable shall not be allowed to travel over any wheel or block that has a radius less than the minimum radius allowed by the cable manufacturer.
10. Minimize the use of snatch blocks and rollers to guide the cable into the conduit at the feed point:
    a. Slack feed by hand the cable into the feed point and raceway without the use of rollers.
11. Tend the cable reel at all times and turn by hand to provide the required cable slack:
    a. Under no circumstances shall the cable tension be allowed to turn the cable reel.
12. Use a rim roller, with a wheel radius greater than the minimum cable bending radius placed at the manhole or vault opening to prevent the cable from dragging on the manhole rim or steps.
13. Perform a continuous thorough visual inspection for flaws, breaks, and abrasions in the cable sheath as the cable leaves the reel, and maintain a slow pulling speed to permit this inspection.
14. Damage to the sheath or finish of the cable is cause for rejecting the cable:

15. Replace any cable damaged in any way during installation.
16. If the cable becomes damaged during installation, stop operations and notify the Engineer immediately:
    a. Engineer to determine whether to replace the entire reel of cable or to install a termination panel to eliminate the damaged section.
17. Document all pulls by a graph which is annotated with the following information:
    a. Reel number.
    b. Pull point ID.
    c. Date and time.
    d. Explanations for abnormalities in readings or interruptions.
    e. Sign-off by Contractor and Engineer.
18. Under no conditions shall the fiber optic cable be left exposed or unattended.
19. After the cables are installed and spliced:
    a. Rack the cables.
    b. Loosely secure in racked position with wire ties.
    c. Attach imprinted plastic coated cloth identification/warning tags to each cable in at least 2 locations in each handhole/manhole.
20. Armored fiber optic cables containing metallic members shall be grounded in accordance with NEC.

F. Splices:
1. Submit all splice locations to the Engineer for approval before installation of the fiber cables.
2. Provide field splices in a splice tray located in a waterproof splice enclosure:
    a. Manufacturers: The following or equal:
        2) Tyco/Raychem, FOSC style splice enclosure.
2. Loop the individual fibers a minimum of 1 full turn within the splice tray to avoid macro/micro bending.
3. After completion of cable terminations, neatly dress all cables.
4. Protect all splices with a thermal shrink sleeve.
5. Provide fusion type fiber optic cable splicing meeting the following requirements:
    a. Joins multimode or single mode fibers.
    b. Establishes a permanent fusion splice.
    c. Waterproof.
    d. Re-enterable, rearrangable, and reusable.
    e. Splice loss less than 0.10 dB.
    f. Protected by a splice enclosure.
6. Requirement for outdoor fiber splice enclosures:
    a. Seal.
    b. Bond.
    c. Anchor.
    d. Protect fiber optic cable splices.
    e. Stand-alone unit that does not require an outer enclosure.
    f. Provide for a maximum of 6 cable entries in a butt-end configuration.
    g. Used in aerial, underground, and direct buried applications.
7. Requirement for indoor fiber splice enclosures:
    a. Anchor.
    b. Protect fiber optic cable splices.
    c. Stand-alone unit that does not require an outer enclosure.
    d. Suitable for the minimum number of splices at that location plus additional capacity for reconfigurations.
8. Re-splice any splice that has a loss greater than 0.10 dB.
9. Leave a minimum of 20 feet of fiber optic cable at each end of splice.

G. Terminations:
1. Terminate all fiber inside a patch panel.
a. Direct landing to a switch, router hub, or PLC will not be allowed.
2. Terminate outdoor cables using a breakout kit that seals the cable and provides physical protection for the fiber strands.
3. Terminate indoor cables using breakout kits with field installed terminators.
4. Labeling:
a. Permanently label all cable terminations. Use labels produced by a wire printer using pressure sensitive polyester labels. Label patch panels as specified in the Identification for Electrical Systems section.

3.4 ERECTION, INSTALLATION, APPLICATION, CONSTRUCTION (NOT USED)

3.5 REPAIR/RESTORATION (NOT USED)

3.6 RE-INSTALLATION (NOT USED)

3.7 COMMISSIONING

A. Factory test:
10. Before shipment and while on the shipping reel, test 100 percent of all fibers for attenuation:
a. Copies of the results shall be:
1) Maintained on file.
2) Attached to the cable reel in a waterproof pouch.
3) Submitted before the delivery of the cable to the job site to Engineer for approval.
11. Conduct the flex test in accordance with FOTP-104 test condition I and III with a maximum sheave diameter of 20 times the cable OD.
12. Verify that the cable withstands 25 impact cycles with:
a. The average increase in attenuation for the fibers less than 0.20 dB at 1,550 nm.
b. No evidence of cracking or splitting.
c. Conduct the test in accordance with FOTP-25.
13. Certify that the cable withstands a tensile load of 2,700 N (600 pounds):
a. Without exhibiting an average increase in attenuation of greater than 0.10 dB.
b. Test in accordance with FOTP-33 using a maximum mandrel and sheave diameter of 560 millimeters.
c. Apply the load for 1 hour in Test Condition II.
14. Certify that the cable withstands a simulated lightning strike:
a. Peak value of the current pulse greater than 105kA.
b. Use a test current with a damped oscillatory maximum time-to-peak value of 15 µs (which corresponds to a minimum frequency of 16.7 kHz) and a maximum frequency of 30 kHz.
c. The time to half-value of the waveform envelope 40 to 70 µs.
d. Conduct the test in accordance with the FOTP-181.
e. In addition to the analysis criterion set forth in FOTP-181, the integrity of the buffer tubes (or analogous loose tube, i.e. core tube) and strength members must be intact after removal of the cable specimens from the test box.

3.8 FIELD QUALITY CONTROL

A. As specified in the Common Work Results for Electrical section.

B. General:
1. All test results shall meet or exceed manufacturer specifications:

a. Test each fiber of each cable for breaks, abnormalities, and overall attenuation characteristics.
b. Replace any fiber that does not meet or exceed manufacturer specifications.

2. Conduct post-installation tests of the fiber optic system in accordance with the Field Electrical Acceptance Tests section.
3. Pre-installation tests and post-installation tests to be witnessed and signed off by Engineer and Owner.
4. Perform OLTS test with equipment capable and calibrated to show anomalies of 0.1 dB as a minimum:
   a. Test multimode fibers at 850 nm and 1,300 nm.
   b. Test single mode fibers at 1,310 and 1,550 nm.
5. Perform OTDR tests on fiber cables less than 100 meters with the aid of a launch cable:
   a. Adjust OTDR pulse width settings to a maximum setting of 1/1000th of the cable length or 10 nanoseconds.

3.9 ADJUSTING (NOT USED)

3.10 CLEANING

A. Clean all fiber optic connectors after termination and before testing. After cleaning, cover all un-terminated connectors with a protective boot.

B. At the completion of construction, touch up the finish on all fiber patch panels and enclosures.

3.11 PROTECTION

A. As specified in the Common Work Results for Electrical section.

B. Protect the fiber system from physical damage and the encroachment of dust, before, during, and after installation.

3.12 SCHEDULES (NOT USED)

END OF SECTION

SECTION 16130

CONDUITS

PART 1 GENERAL

1.1 SUMMARY

A. Section includes:
1. Metallic conduits.
2. Nonmetallic conduits.
3. Conduit bodies.
4. Conduit fittings and accessories.
5. Conduit installation.

1.2 REFERENCES

A. As specified in the Common Work Results for Electrical section.

B. American National Standards Institute (ANSI):
1. C80.1 - Electrical Rigid Steel Conduit.
2. C80.3 - Steel Electrical Metallic Tubing.
3. C80.5 - Electrical Rigid Aluminum Conduit.
4. C80.6 - Electrical Intermediate Metal Conduit.

C. National Electrical Manufacturer's Association (NEMA):
1. RN-1 - Polyvinyl Chloride (PVC) Externally Coated Galvanized Rigid Steel Conduit and Intermediate Steel Conduit.
2. TC2 - Electrical Polyvinyl Chloride (PVC) Conduit.
3. TC3 - Polyvinyl Chloride (PVC) Fittings for Use with Rigid PVC Conduit and Tubing.
4. TC7 - Smooth-Wall Coilable Electrical Polyethylene Conduit.
5. TC13 - Electrical Nonmetallic Tubing.
6. TC14 - Reinforced Thermosetting Resin Conduit (RTRC) and Fittings.

D. Underwriters Laboratories (UL):
1. 1 - Standard for Flexible Metal Conduit.
2. 6 - Standard for Electrical Rigid Metal Conduit - Steel.
3. 6A - Standard for Electrical Rigid Metal Conduit - Aluminum, Red Brass, and Stainless Steel.
4. 360 - Standard for Liquidtight Flexible Steel Conduit.
5. 651 - Standard for Schedule 40, 80, Type EB and A Rigid PVC Conduit and Fittings.
6. 651B - Standard for Continuous Length HDPE Conduit.
7. 797 - Standard for Electrical Metallic Tubing - Steel.
8. 1242 - Standard for Electrical Intermediate Metal Conduit - Steel.
9. 1653 - Standard for Electrical Nonmetallic Tubing.
10. 1660 - Standard for Liquidtight Flexible Nonmetallic Conduit.
11. 1684 - Standard for Reinforced Thermosetting Resin Conduit (RTRC) and Fittings.

1.3 DEFINITIONS

A. As specified in the Common Work Results for Electrical section.

B. Specific definitions and abbreviations:

1. Conduit bodies: A separate portion of a conduit system that provides access through a removable cover to the interior of the system at a junction of 2 or more conduit sections. Includes, but not limited to, Shapes C, E, LB, T, X, etc.
2. Conduit fitting: An accessory that primarily serves a mechanical purpose. Includes, but not limited to, bushings, locknuts, hubs, couplings, reducers, etc.
3. GRC: Galvanized rigid steel conduit.
4. PCS: Polyvinyl chloride (PVC) coated rigid steel conduit.
5. EMT: Electrical metallic tubing.
6. PVC: Polyvinyl chloride rigid nonmetallic conduit.
7. SLT: Sealtight-liquidtight flexible conduit.
8. EFLX: Explosion proof flexible conduit.
9. RAC: Rigid aluminum conduit.
10. NPT: National pipe thread.

1.4 SUBMITTALS

A. Furnish submittals as specified in the Common Work Results for Electrical section.

B. Product data:
1. Furnish complete manufacturer's catalog sheets for every type and size of conduit, fitting, conduit body, and accessories to be used on the Project.
2. Furnish complete manufacturer's recommended special tools to be used for installation if required.

C. Certifications:
1. Furnish PVC-coated conduit manufacturer's certification for each installer.

D. Record Documents:
1. Incorporate all changes in conduit routing on electrical plan drawings.
2. Dimension underground and concealed conduits from building lines.
3. Furnish hard copy drawings.

1.5 QUALITY ASSURANCE

A. As specified in the Common Work Results for Electrical section.

B. All conduits, conduit bodies, and fittings shall be UL listed and labeled.

C. Every installer of PVC-coated metallic conduit shall be certified by the manufacturer for installation of the conduit.

1.6 DELIVERY, STORAGE, AND HANDLING

A. As specified in the Common Work Results for Electrical section.

B. Do not expose non-metallic conduit to direct sunlight.

C. Do not store conduit in direct contact with the ground.

D. Do not store aluminum conduit in contact with concrete.

1.7 PROJECT OR SITE CONDITIONS

A. As specified in the Common Work Results for Electrical section.

1.8 SEQUENCING

A. Before installing any conduit or locating any device box:
   1. Examine the complete set of Drawings and Specifications, and all applicable shop drawings.
   2. Verify all dimensions and space requirements and make any minor adjustments to the conduit system as required to avoid conflicts with the building structure, other equipment, or the work of other trades.

1.9 SCHEDULING (NOT USED)

1.10 WARRANTY

A. As specified in the Common Work Results for Electrical section.

1.11 SYSTEM START-UP

A. As specified in the Common Work Results for Electrical section.

1.12 OWNER'S INSTRUCTIONS (NOT USED)

1.13 MAINTENANCE (NOT USED)

PART 2 PRODUCTS

2.1 MANUFACTURERS

A. Galvanized rigid steel conduit:
   1. One of the following or equal:
      a. Western Tube and Conduit.
      b. Allied Tube and Conduit.
      c. Wheatland Tube Co.

B. PVC-coated rigid steel conduit:
   1. One of the following or equal:
      a. Robroy Ind.
      b. Ocal, Inc.
      c. Calbond.
      d. Allied.
      e. NEC, Inc. BlackGuard.

C. Sealtight-liquidtight flexible conduit:
   1. One of the following or equal:
      a. Southwire.
      b. AFC Cable Systems.
      c. Electri-Flex Co.
      d. Anaconda.

D. Explosion proof flexible conduit:
   1. One of the following or equal:
      a. Appleton.
      b. Crouse-Hinds.
      c. Hubbell Killark.

E. Conduit bodies:

1. One of the following or equal:
    a. Crouse-Hinds.
    b. Appleton.
    c. O-Z/Gedney.
    d. Ocal, Inc.
    e. Robroy Ind.
    f. Calbond.
    g. Carlon.

F. Joint compound:
    1. The following or equal:
        a. Thomas and Betts.

G. Galvanized rigid steel conduit expansion fittings:
    1. One of the following or equal:
        a. Crouse-Hinds.
        b. Appleton.
        c. O-Z/Gedney.

H. PVC-coated rigid steel conduit expansion fittings:
    1. One of the following or equal:
        a. Ocal, Inc.
        b. Robroy Ind.
        c. NEC, Inc. BlackGuard.

I. Conduit sleeve:
    1. One of the following or equal:
        a. Crouse-Hinds.
        b. Appleton.
        c. O-Z/Gedney.

J. Conduit seals:
    1. One of the following or equal:
        a. Appleton.
        b. Crouse-Hinds.
        c. O-Z/Gedney.

K. Conduit hangers and supports:
    1. As specified in the Hangers and Supports section.

L. Conduit through wall and floor seals:
    1. The following or equal:
        a. O-Z/Gedney:
            1) Type "WSK."
            2) Type “CSM.”

2.2 SYSTEM DESCRIPTION

A. Provide conduits, conduit bodies, fittings, junction boxes, and all necessary components, whether or not indicated on the Drawings, as required, to install a complete electrical raceway system.

2.3 EXISTING PRODUCTS (NOT USED)

2.4 MATERIALS (NOT USED)

2.5 MANUFACTURED UNITS (NOT USED)

2.6 EQUIPMENT (NOT USED)

2.7 COMPONENTS

A. GRC:
   1. All threads: NPT standard conduit threads with a 3/4-inch taper per foot:
      a. Running conduit threads are not acceptable.
   2. Hot-dip galvanized inside and out:
      a. Ensures complete coverage and heats the zinc and steel to a temperature that ensures the zinc alloys with the steel over the entire surface.
      b. Electro-galvanizing is not acceptable.
   3. Manufactured in accordance with:
      a. UL-6.
      b. ANSI C80.1.

B. PCS:
   1. The steel conduit, before PVC coating, shall be new, unused, hot-dip galvanized material, conforming to the requirements for Type GRC.
   2. Coated conduit NEMA Standard RN-1:
      a. The galvanized coating may not be disturbed or reduced in thickness during the cleaning and preparatory process.
   3. Factory-bonded PVC jacket:
      a. The exterior galvanized surfaces shall be coated with primer before PVC coating to ensure a bond between the zinc substrate and the PVC coating.
      b. Nominal thickness of the exterior PVC coating shall be 0.040 inch except where part configuration or application of the piece dictates otherwise.
      c. PVC coating on conduits and associated fittings shall have no sags, blisters, lumps, or other surface defects and shall be free of holes and holidays.
      d. The PVC adhesive bond on conduits and fittings shall be greater than the tensile strength of the PVC plastic coating:
         1) Confirm bond with certified test results.
   4. A urethane coating shall be uniformly and consistently applied to the interior of all conduits and fittings:
      a. Nominal thickness of 0.002 inch.
      b. Conduits having areas with thin or no coating are not acceptable.
      c. All threads shall be coated with urethane.
   5. The PVC exterior and urethane interior coatings applied to the conduits shall afford sufficient flexibility to permit field bending without cracking or flaking at temperature above 30 degrees Fahrenheit (-1 degree Celsius).
   6. PCS conduit bodies and fittings:
      a. Malleable iron.
      b. The conduit body, before PVC coating, shall be new, unused material and shall conform to appropriate UL standards.
      c. The PVC coating on the outside of conduit bodies shall be 0.040-inch thick and have a series of ribs to protect the coating from tool damage during installation.
      d. 0.002-inch interior urethane coating.
      e. Utilize the PVC coating as an integral part of the gasket design.
      f. Stainless steel cover screw heads shall be encapsulated with plastic to ensure corrosion protection.

g. A PVC sleeve extending 1 conduit diameter or 2 inches, whichever is less, shall be formed at each female conduit opening.
    1) The inside diameter of the sleeve shall be the same as the outside diameter of the conduit to be used.
    2) The sleeve shall provide a vapor- and moisture resistant seal at every connection.

C. SLT:
1. Temperature rated for use in the ambient temperature at the installed location but not less than the following:
    a. General purpose:
        1) Temperature range: -20 degrees Celsius to +80 degrees Celsius.
    b. Oil-resistant:
        1) Temperature range: -20 degrees Celsius to +60 degrees Celsius.
2. Sunlight-resistant, weatherproof, and watertight.
3. Manufactured from single strip steel, hot-dip galvanized on all 4 sides before conduit fabrication.
4. Strip steel spiral wound resulting in an interior that is smooth and clean for easy wire pulling.
5. Overall PVC jacket.
6. With integral copper ground wire, built in the core, in conduit trade sizes 1/2 inch through 1-1/4 inch.

D. EFLX:
1. Suitable for the hazardous Class and Group where installed:
    a. As specified in the Common Work Results for Electrical section.
2. Metallic braid shall provide continuous electrical path.
3. Stainless steel construction.
4. Provide fittings and unions as required for the installation.

E. PVC:
1. Extruded from virgin PVC compound:
    a. Schedule 40 unless otherwise specified.
    b. Schedule 80 extra-heavy wall where specified.
2. Rated for 90 degrees Celsius conductors or cable.
3. Rated for use in direct sunlight.

F. Conduit bodies:
1. Material consistent with conduit type:
    a. Malleable iron bodies and covers when used with Type GRC.
    b. Cast aluminum bodies and covers when used with Type RAC.
    c. PVC bodies and covers when used with Type PVC.
    d. PVC-coated malleable iron bodies and covers when used with Type PCS.
2. Conduit bodies to conform to Form 8, Mark 9, or Mogul design:
    a. Mogul design conforming to NEC requirements for bending space for large conductors for conduit trade sizes of 1 inch and larger with conductors #4 AWG and larger, or where required for wire-bending space.
3. Gasketed covers attached to bodies with stainless steel screws secured to threaded holes in conduit body.

2.8 ACCESSORIES

A. Connectors and fittings:
1. Manufactured with compatible materials to the corresponding conduit.

B. Insulated throat metallic bushings:

1. Construction:
    a. Malleable iron or zinc-plated steel when used with steel conduit.
    b. Aluminum when used with aluminum conduit.
    c. Positive metallic conduit end stop.
    d. Integrally molded non-combustible phenolic-insulated surfaces rated at 150 degrees Celsius.
    e. Use fully insulated bushings on nonmetallic conduit system made of high-impact 150 degrees Celsius rated non-combustible thermosetting phenolic.

C. Insulated grounding bushings:
    1. Construction:
        a. Malleable iron or steel, zinc-plated, with a positive metallic end stop.
        b. Integrally molded non-combustible phenolic-insulated surfaces rated at 150 degrees Celsius.
        c. Tin-plated copper grounding saddle for use with copper or aluminum conductors.

D. Electrical unions (Erickson Couplings):
    1. Construction:
        a. Malleable iron for use with steel conduit.
        b. Aluminum for use with aluminum conduit.
        c. Concrete tight, 3-piece construction.
        d. Rated for Class I Division 1 Group D in hazardous areas.

E. SLT fittings:
    1. Construction:
        a. Malleable iron.
        b. Furnished with locknut and sealing ring.
        c. Liquidtight, raintight, oiltight.
        d. Insulated throat.
        e. Furnish as straight, 45-degree elbows, and 90-degree elbows.
        f. Designed to prevent sleeving:
            1) Verify complete bonding of the raceway jacket to the plastic gasket seal.
        g. Equipped with grounding device to provide ground continuity irrespective of raceway core construction. Grounding device, if inserted into raceway and directly in contact with conductors, shall have rolled-over edges for sizes under 5 inches.
        h. Where terminated into a threadless opening using a threaded hub fitting, a suitable moisture-resistant/oil-resistant synthetic rubber gasket shall be provided between the outside of the box or enclosure and the fitting shoulder. Gasket shall be adequately protected by and permanently bonded to a metallic retainer.
    2. Corrosion-resistant and outdoor SLT fittings:
        a. Construction:
            1) PVC-coated liquidtight fittings with a bonded 0.040-inch thick PVC coating on the metal connector to form a seal around the SLT conduit.
            2) Insulated throat and an integral sealing ring.

F. Hubs for threaded attachment of steel conduit to sheet metal enclosures:
    1. Construction:
        a. Insulated throat.
        b. PVC-coated when used in corrosive areas.
        c. Bonding locknut.
        d. Recessed neoprene o-ring to ensure watertight and dusttight connector.
        e. 1/2-inch through 1-1/4-inch steel zinc electroplated.
        f. 1-1/2-inch through 6-inch malleable iron zinc plated.
        g. Aluminum with aluminum conduit.
    2. Usage:

a. All conduits in damp, wet, outdoor, and corrosive areas shall use threaded hubs for connections to sheet metal enclosures.

G. Sealing fittings:
1. Construction:
a. 40-percent wire fill capacity.
b. PVC-coated when used in corrosive areas.
c. Malleable ductile iron with steel conduit.
d. Aluminum with aluminum conduit.
e. Type EYDX where drains are required.
f. Type EYSX where drains are not required.
g. UL listed for use in Class I, Division 1, Groups A, B, C, D; Class I, Division 2, Groups A, B, C, D; and Class II, Divisions 1 and 2, Groups E, F, and G.
2. Sealing compound:
a. Fiber filler and cement as recommended by the sealing fitting manufacturer.
b. Approved for the conditions and use.
1) Not affected by surrounding atmosphere or liquids.
c. Melting point shall be 200 degrees Fahrenheit minimum.

H. PVC fittings:
1. Materials:
a. All devices shall be made of PVC, using the same materials as used for Type PVC conduit.
b. All metal hardware shall be stainless steel.

I. Through wall and floor seals:
1. Materials:
a. Body: Casting of malleable or ductile iron with a hot-dip galvanized finish Aluminum.
b. Grommet: Neoprene.
c. Pressure rings: PVC-coated steel.
d. Disc material: PVC-coated steel.

J. Expansion/deflection couplings:
1. Use to compensate for movement in any directions between 2 conduit ends where they connect.
2. Shall allow movement of 3/4 inch from the normal in all directions.
3. Shall allow angular movement for a deflection of 30 degrees from normal in any direction.
4. Constructed to maintain electrical continuity of the conduit system.
5. Materials:
a. End couplings: Bronze or galvanized ductile iron.
b. Sleeve: Neoprene.
c. Bands: Stainless steel.
d. Bonding jumper: Tinned copper braid.

K. Expansion couplings:
1. Shall allow for expansion and contraction of conduit:
a. Permitting 8-inch movement, 4 inches in either direction.
2. Constructed to maintain electrical continuity of the conduit system.
3. Materials:
a. Head: Malleable or ductile iron.
b. Sleeve: Steel.
c. Insulating bushing: Phenolic.
d. Finish: Hot-dip galvanized.
e. Aluminum when used with Type RAC.

f. PVC-coated when used with Type PCS.

L. Conduit markers:
1. As specified in the Identification for Electrical Systems section.

2.9 MIXES (NOT USED)

2.10 FABRICATION (NOT USED)

2.11 FINISHES (NOT USED)

2.12 SOURCE QUALITY CONTROL

A. As specified in the Common Work Results for Electrical section.

PART 3 EXECUTION

3.1 EXAMINATION (NOT USED)

3.2 PREPARATION (NOT USED)

3.3 INSTALLATION

A. As specified in the Common Work Results for Electrical section.

B. General:
1. Conduit routing:
a. The electrical drawings are diagrammatic in nature:
1) Install conduit runs as specified with schematic representation indicated on the Drawings and as specified.
2) Modify conduit runs to suit field conditions, as accepted by the Engineer:
a) Make changes in conduit locations that are consistent with the design intent but are dimensionally different, or routing to bypass obstructions.
b) Make changes in conduit routing due to the relocation of equipment.
3) The electrical drawings do not indicate all required junction boxes and pull boxes:
a) Provide junction boxes and pull boxes to facilitate wire pulling as required:
(1) To meet cable manufacturer’s pulling tension requirements.
(2) To limit total conduit bends between pull locations.
b) Install junction boxes and pull boxes at locations acceptable to the Engineer.
b. The Contractor is responsible for any deviations in general location, conduit size, routing, or changes to the conduit schedule without the express written approval or direction by the Engineer:
1) The Engineer is the sole source in determining whether the change is constituted as a deviation:
2) Perform any changes resulting in additional conduits, or extra work from such deviations.
3) Incorporate any deviations on the Record Documents.
2. Use only tools recommended by the conduit manufacturer for assembling the conduit system.

3. Provide adequate clearances from high-temperature surfaces for all conduit runs. Provide minimum clearances as follows:
    a. Clearance of 6 inches from surfaces 113 degrees Fahrenheit to 149 degrees Fahrenheit.
    b. Clearance of 12 inches from surfaces greater than 149 degrees Fahrenheit.
    c. Keep conduits at least 6 inches from the coverings on hot water and steam pipes, 18 inches from the coverings on flues and breechings, and 12 inches from fuel lines and gas lines.
    d. Where it is necessary to route conduits close to high-temperature surfaces, provide a high-reflectance thermal barrier between the conduit and the surface.
4. Support conduit runs on water-bearing walls a minimum of 7/8-inch away from wall on an accepted preformed channel:
    a. Do not run conduits within water-bearing walls unless otherwise indicated on the Drawings.
5. Do not install 1-inch or larger conduits in or through structural members unless approved by the Engineer.
6. Run conduits exposed to view parallel with or at right angles to structural members, walls, or lines of the building:
    a. Install straight and true conduit runs with uniform and symmetrical elbows, offsets, and bends.
    b. Make changes in direction with long radius bends or with conduit bodies.
7. Install conduits with total conduit bends between pull locations less than or equal to 270 degrees.
8. Route all exposed conduits to preserve headroom, access space and work space, and to prevent tripping hazards and clearance problems:
    a. Install conduit runs so that runs do not interfere with proper and safe operation of equipment and do not block or interfere with ingress or egress, including equipment-removal hatches.
    b. Route conduits to avoid drains or other gravity lines. Where conflicts occur, relocate the conduit as required.
9. When installing conduits through existing slabs or walls, make provisions for locating any possible conflicting items where the conduit is to penetrate. Use tone signal or X-ray methods to make certain that no penetrations will be made into the existing conduits, piping, cables, post-tensioning cables, etc.
10. Plug conduits brought into pull boxes, manholes, handholes, and other openings until used to prevent entrance of moisture.
11. Install conduits through wall and floor seals where indicated on the Drawings.
12. For existing and new 2-inch and larger conduit runs, snake conduits with a conduit cleaner equipped with a cylindrical mandrel of a diameter not less than 85 percent of nominal diameter of the conduit:
    a. Remove and replace conduits through which mandrel will not pass.
13. Provide all sleeves and openings required for the passage of electrical raceways or cables even when these openings or sleeves are not specifically indicated on the Drawings.
14. Install complete conduit systems before conductors are installed.
15. Provide metallic conduits terminating in transformer, switchgear, motor control center, or other equipment conduit windows with grounding bushings and ground with a minimum No. 6 AWG ground wire.
16. Underground conduits:
    a. Install underground conduits, including conduit runs below slabs-on-grade in concrete-reinforced duct bank construction:
        1) As specified in the Duct Banks section.
    b. Make underground conduit size transitions at handholes and manholes.
    c. Install spare conduits in underground duct banks towards top center of runs to allow for ease of installation of future cables as conduits enter underground manholes and handholes.

d. Seal around conduit penetrations of below grade walls with a mechanical seal.

C. Lighting and receptacle conduits:
1. Provide conduit runs for lighting and receptacle circuits, whether or not indicated on the Drawings:
2. Install conduits in accordance with the requirements of this Section unless otherwise indicated.
3. Minimum conduit size:
a. 3/4-inch for exposed conduits.
b. 1-inch for underground or in-slab conduits.
4. Provide conduit materials for the installed location as specified in the Common Work Results for Electrical section.

D. Hazardous areas:
1. As specified in the Common Work Results for Electrical section for hazardous areas and specific Class and Division.
2. As specified in the Hazardous Classified Area Construction section for hazardous area conduit installation requirements.

E. Conduit usage:
1. Exposed conduits:
a. Rigid conduit:
1) Install the rigid conduit type for each location as specified in the Common Work Results for Electrical section.
2) Minimum size: 3/4-inch.
b. Flexible conduit:
1) Use flexible conduit for final connections between rigid conduit and motors, vibrating equipment, instruments, control equipment, or where required for equipment servicing:
a) Use Type SLT with rigid metallic conduit.
b) Use Type EFLX in Class I Division 1 locations.
2) Minimum size: 3/4-inch:
a) 1/2 when required for connection to instruments.
3) Maximum length:
a) Fixed equipment:

Conduit Trade Size	Flexible Conduit Length (inch)
3/4	18
1	18
1-1/4	18
1-1/2	18
2	36
2-1/2	36
3	36
3-1/2	38
4	40

b) Removable instruments or hinged equipment:
(1) As required to allow complete removal or full movement without disconnecting or stressing the conduit.

2. Concrete-encased and embedded conduits:
    a. Straight runs and bends less than 45 degrees:
        1) Type PVC Schedule 40.
    b. Bends with total deflection greater than 45 degrees;
        1) PCS,
    c. Entering and exiting duct bank, underground or embedded conduit runs a minimum 12 inches above and below grade, finished floor, or entering equipment:
        1) PCS.
    d. Minimum size:
        1) 2-inch in duct banks.
        2) 1-inch for in-slab conduits.
        3) Provide conduit fittings to enlarge the conduit from the exposed size in the conduit schedule as required.
3. Direct-buried and sand-bedded duct bank conduits:
    a. Type PCS.
    b. Minimum size: 1-inch.
4. Below-slab conduits:
    a. Type PCS.
    b. Minimum size: 1-inch.
5. PVC-coated rigid metallic conduit:
    a. Use specifically manufactured or machined threading dies to manufacturer's specifications to accommodate the PVC jacket.
6. GRC:
    a. Conduit shall be cut square and reamed before threading.

F. Conduit joints and bends:
1. General:
    a. Where conduit is underground, under slabs on grade, exposed to the weather, or in NEMA Type 4 or NEMA Type 4X locations, make joints liquidtight.
    b. Keep bends and offsets in conduit runs to an absolute minimum.
    c. All bends shall be symmetrical.
    d. The following conduit systems shall use large-radius sweep elbows:
        1) Underground conduits.
        2) Conduits containing fiber optic cables.
    e. Provide large-radius factory-made bends for 1-1/4-inch trade size or larger.
    f. Make field bends with a radius of not less than the requirements found in the NEC:
        1) The minimum bending radius of the cable must be less than the radius of the conduit bend.
        2) Make all field bends with power bending equipment or manual benders specifically intended for the purpose:
            a) Make bends so that the conduit is not damaged and the internal diameter is not effectively reduced.
            b) For the serving utilities, make bends to meet their requirements.
    g. Replace all deformed, flattened, or kinked conduit.
2. Threaded conduit:
    a. Cut threads on rigid metallic conduit with a standard conduit-cutting die that provides a 3/4-inch per foot taper and to a length such that all bare metal exposed by the threading operation is completely covered by the couplings or fittings used. In addition, cut the lengths of the thread such that all joints become secure and wrench-tight just preceding the point where the conduit ends would butt together in couplings or where conduit ends would butt into the ends or shoulders of other fittings.
    b. Thoroughly ream conduit after threads have been cut to remove burrs.
    c. Use bushings or conduit fittings at conduit terminations.

d. On exposed conduits, repair scratches and other defects with galvanizing repair stick, Enterprise Galvanizing “Galvabar™,” or CRC “Zinc It.”
e. Coat conduit threads with an approved electrically conductive sealant and corrosion inhibitor that is not harmful to the conductor insulation:
1) Apply to the male threads and tighten joints securely.
2) Clean excess sealant from exposed threads after assembly.
f. Securely tighten all threaded connections.
g. Any exposed threaded surfaces must be cleaned and coated with a galvanizing solution so that all exposed surfaces have a galvanized protective coating.

3. PVC:
a. Use approved solvent-weld cement specifically manufactured for the purpose. Spray-type cement is not allowed.
b. Apply heat for bends so that conduit does not distort or discolor. Use a spring mandrel as required to ensure full inside diameter at all bends:
1) Utilize a heater specifically for PVC conduit as recommended by the conduit manufacturer.

G. Conduit sealing and drainage:
1. Conduit drainage and sealing other than required for hazardous and classified areas:
a. Provide sealing and drainage in vertical drops of long (in excess of 20 feet), exterior, above-grade conduit runs at the points at which the conduit enters buildings, switchgear, control panels, lighting panelboards, and other similar enclosures.
b. Provide seal fittings with drains in vertical drops directly above grade for exterior and above-grade conduit runs that are extended below grade.
c. Provide conduit seals with drains in areas of high humidity and rapidly changing temperatures:
1) Where portions of an interior raceway pass through walls, ceilings, or floors that separate adjacent areas having widely different temperatures.
d. Provide conduit seals similar to O-Z/Gedney (Type CSM) on all conduits between corrosive and non-corrosive areas.
e. Seal one end only of all underground conduits at highest point with O-Z/Gedney sealing (non-hazardous) filling, or equal.
2. Install seals with drains at any location along conduit runs where moisture may condense or accumulate. This requirement includes, but is not limited to, the following locations: control panels, junction boxes, pullboxes, or low points of the conduit.

H. Conduit supports:
1. General:
a. Provide appropriate hangers, supports, fasteners, and seismic restraints to suit applications:
1) As specified in the Hangers and Supports section.
2) Provide support materials consistent with the type of conduit being installed as specified in the Common Work Results for Electrical section.
b. Support conduit at the intervals required by the NEC.
c. Perforated strap and plumbers tape are not acceptable for conduit supports.
2. Conduit on concrete or masonry:
a. Use 1-hole malleable iron straps with metallic or plastic expansion anchors and screws or support from preset inserts.
b. Use preset inserts in concrete when possible.
c. Use pipe spacers (clamp backs) in wet locations.
3. Suspended conduit:
a. Use malleable-iron factory-made split-hinged pipe rings with threaded suspension rods sized for the weight to be carried (minimum 3/8-inch diameter), Kindorf, or equal.

b. For grouped conduits, construct racks with threaded rods and tiered angle iron or preformed channel cross members. Clamp each conduit individually to a cross member. Where rods are more than 2-feet long, provide rigid sway bracing.

4. Supports at structural steel members:
   a. Use beam clamps.
   b. Drilling or welding may be used only as specified or with approval of the Engineer.
5. PVC-coated rigid metal systems:
   a. Provide right-angle beam clamps and “U” bolts specially formed and sized to snugly fit the outside diameter of the coated conduit. Provide "U" bolts with PVC-encapsulated nuts that cover the exposed portions of the threads.
   b. Securely fasten exposed conduits with Type 316 stainless steel clamps or straps.

I. Expansion or expansion/deflection fittings:
1. General:
   a. Align expansion coupling with the conduit run to prevent binding.
   b. Follow manufacturer’s instructions to set the piston opening.
   c. Install expansion fittings across concrete expansion joints and at other locations where necessary to compensate for thermal or mechanical expansion and contraction.
   d. Furnish fittings of the same material as the conduit system.
2. For metallic conduit, provide expansion or expansion/deflection couplings, as appropriate, where:
   a. Install expansion fittings a minimum of every 200 feet in straight conduit runs.

J. Empty conduits:
1. Provide a polyethylene rope rated at 250 pounds tensile strength in each empty conduit more than 10 feet in length.
2. Seal ends of all conduits with approved, manufactured conduit seals, caps, or plugs immediately after installation:
   a. Keep ends sealed until immediately before pulling conductors.

K. Miscellaneous:
1. Seal roof penetrations for raceways and other items that penetrate the roof in accordance with roofing manufacturer’s instructions and as indicated on the Drawings.
2. Provide electrical unions at all points of union between ends of rigid conduit systems that cannot otherwise be coupled:
   a. Running threads and threadless couplings are not allowed.
3. Replace any conduits installed that the Engineer determines do not meet the requirements of this Specification.

3.4 ERECTION, INSTALLATION, APPLICATIONS, CONSTRUCTION (NOT USED)

3.5 REPAIR/RESTORATION (NOT USED)

3.6 RE-INSTALLATION (NOT USED)

3.7 COMMISSIONING (NOT USED)

3.8 FIELD QUALITY CONTROL

A. As specified in the Common Work Results for Electrical section.

3.9 ADJUSTING (NOT USED)

3.10 CLEANING (NOT USED)

3.11 PROTECTION

A. As specified in the Common Work Results for Electrical section.

3.12 SCHEDULES (NOT USED)

END OF SECTION

THIS PAGE INTENTIONALLY LEFT BLANK FOR DOUBLE SIDED PRINTING

SECTION 261330

DUCT BANKS

PART 1 GENERAL

1.01 SUMMARY

A. Section includes:
   1. Electrical underground duct banks.
   2. Duct bank installation requirements.

1.02 REFERENCES

A. As specified in the Common Work Results for Electrical section.

1.03 DEFINITIONS

A. As specified in the Common Work Results for Electrical section.

1.04 SYSTEM DESCRIPTION

A. Provide trenching, forming, spacers, conduit, concrete, backfill, and compaction necessary for the complete installation of the duct banks.

B. Provide concrete duct banks for all conduits installed below grade, on the site, below structures, or in contact with the earth, unless otherwise indicated on the Drawings.

1.05 SUBMITTALS

A. Furnish submittals as specified in the Submittal Procedures section and the Common Work Results for Electrical section.

B. Product data:
   1. PVC conduit spacers.
   2. Detectable underground marking tape.
   3. Pull line.

C. Shop drawings:
   1. Submit site plan drawings of duct banks including underground profiles indicating all underground utilities.
   2. For duct bank routings crossing under building footers or foundations alternative to designed routings indicated on the Drawings:
      a. Submit shop drawings detailing the new building footer crossing locations and plan drawings labeling all equipment to be installed on top of the new routing for approval by the project Structural Engineer.

1.06 QUALITY ASSURANCE

A. As specified in the Common Work Results for Electrical section.

1.07 DELIVERY, STORAGE, AND HANDLING

A. As specified in the Common Work Results for Electrical section.

1.08 PROJECT OR SITE CONDITIONS

A. As specified in the Common Work Results for Electrical section.

1.09 SEQUENCING

1.10 SCHEDULING (NOT USED)

1.11 WARRANTY

A. As specified in the Common Work Results for Electrical section.

1.12 SYSTEM START-UP

A. As specified in the Common Work Results for Electrical section.

1.13 OWNER'S INSTRUCTIONS (NOT USED)

1.14 MAINTENANCE (NOT USED)

PART 2 PRODUCTS

2.01 MANUFACTURERS

A. Conduit spacers:
   1. One of the following or equal:
      a. Carlon Snap-Loc.
      b. Cantex.
      c. Osburn Associates, Inc.

B. Detectable underground marking tape:
   1. One of the following or equal:
      a. Blackburn Manufacturing Co.
      b. Pro-Line Safety Products.
      c. Panduit.

C. Pull line:
   1. One of the following or equal:
      a. Arnco.
      b. Greenlee.
      c. Osburn Associates, Inc.

D. Duct seal:
   1. The following or equal:
      a. OZ Gedney type DUX.

2.02 EXISTING PRODUCTS (NOT USED)

2.03 MATERIALS

A. Provide conduit as specified in the Conduits section:
   1. Use duct suitable for use with 194 degree Fahrenheit rated conductors.

2.04 MANUFACTURED UNITS

A. Conduit spacers:
   1. Provide conduit spacers recommended by the conduit manufacturer or specified above.
   2. Saddle type.
   3. Non-metallic, non-corrosive, non-conductive.
   4. Interlocking type:
      a. Vertical interlocking.
      b. Horizontal interlocking.
   5. Suitable for concrete encasement.
   6. Molded-in rebar holder.
   7. Accommodates 2-inch through 6-inch conduit sizes.
   8. Relieves the conduit from both horizontal and vertical stresses.

B. Pull line:
   1. Minimum 1/4-inch wide, flat design.
   2. Polyester.
   3. Minimum pulling strength 1,200 pounds.

C. Detectable marking tape:
   1. Provide a detectable tape, locatable by a cable or metal detector from above the undisturbed grade.
   2. Aluminum core laminated between polyethylene film.
   3. 6-inch wide red tape imprinted with black lettering stating "CAUTION - BURIED ELECTRIC LINE BELOW" or equivalent.

D. Duct seal:
   1. Non-hardening sealing compound.
   2. Flexible, can be applied by hand.
   3. UL Listed for use with installed conductors.

2.05 EQUIPMENT (NOT USED)

2.06 COMPONENTS (NOT USED)

2.07 ACCESSORIES (NOT USED)

2.08 MIXES

A. Provide a red-oxide conduit encasement coloring agent.

2.09 FABRICATION (NOT USED)

2.10 FINISHES (NOT USED)

2.11 SOURCE QUALITY CONTROL (NOT USED)

PART 3 EXECUTION

3.01 EXAMINATION (NOT USED)

3.02 PREPARATION (NOT USED)

3.03 INSTALLATION

A. As specified in the Common Work Results for Electrical section.

B. Duct banks:
   1. Install duct banks encased in concrete at least 24 inches below finish grade, unless otherwise indicated on the Drawings.
   2. Damage minimization:
      a. Conduit should not be left exposed in an open trench longer than is necessary.
      b. Protect all underground duct banks against damage during pouring of concrete or backfilling.
   3. All plastic conduit fittings to be joined should be exposed to the same temperature conditions for a reasonable length of time before assembly.
   4. Provide No. 4/0 American Wire Gauge bare copper ground wire the entire length of duct bank and bond to the grounding system at each end of the duct bank.
   5. Install underground ducts to be self-draining:
      a. Slope duct banks away from buildings to manholes, handholes, or pullboxes.
      b. Slope duct banks uniformly from manholes, handholes, or pullboxes to manholes, handholes, or pullboxes or both ways from high points between manholes, handholes, or pullboxes.
      c. Slope a minimum of 1/4 inch per 10 feet.
   6. Where new duct banks join to existing manholes, handholes, or pullboxes, make the proper fittings and fabricate the concrete envelopes to ensure smooth durable transitions, as indicated on the Drawings.
   7. Install pull line in spare conduits:
      a. Provide adequate pull line at both ends of conduits to facilitate conductor pulling.
      b. Cap above ground spare conduit risers at each end with screw-on conduit caps.

C. Trenching:
   1. Trench must be uniformly graded with the bottom, rock free and covered with select material.
   2. Whenever possible, use the walls of the trench as forms for concrete encasement:
      a. Forms are required where the soil is not self-supporting.
   3. Avoid damaging existing ducts, conduits, cables, and other utilities.

D. Duct spacing:
   1. Separate conduits with manufactured plastic spacers using a minimum space between the outside surfaces of adjacent conduits of 2 inches, unless otherwise indicated on the Drawings:
      a. Separate medium voltage ducts a minimum of 7.5 inches on center.
   2. Install spacers to maintain uniform spacing of duct assembly a minimum of 4 inches above the bottom of the trench during concrete pour. Install spacers on 8-foot maximum intervals:
      a. Due to some distortion of conduit from heat, and other means, it may be necessary to install extra spacers within the duct bank:
         1) Install the intermediate set of spacers within normal required spacing to maintain the proper horizontal clearance:
            a) Clearance is required to allow the proper amount of concrete to infiltrate vertically among the duct to ensure proper protection.
   3. Spacers shall not be located at the center of a bend:
      a. Locate spacer in the tangent, free of the coupling on fabricated bends.
      b. Locate spacers midway between the tangent and the center bend on trench formed sweeps.

E. Terminating:
   1. Use bell ends in duct at entrances into cable vaults.
   2. Make conduit entrances into cable vaults tangential to walls of cable vault.
   3. Form trapezoidal transitions between duct bank and cable vaults as needed in order to ensure adequate cable bending radius for the duct bank-to-vault transition.
   4. Install duct seal in all conduits including spare conduits, at entrance to manholes/handholes, and building/equipment stub-ups. Form by hand to conduit and around cables to develop moisture barrier.
   5. New manhole or handhole applications, provide a single opening or “window” per duct bank, sized to accommodate the duct bank envelope.

F. Concrete:
   1. Provide nonferrous tie wires to prevent displacement of the conduits during pouring of concrete:
      a. Tie wire shall not act as a substitute for spacers.
   2. Install minimum 3-inch cover around conduit and rebar.
   3. Consolidation of encasement concrete around duct banks shall be by hand puddling, with no mechanical vibration.
   4. Conduit is subject to temperature rise. As concrete cures, allow the free end to expand by pouring the concrete from the center of the run or from one tie in point.

G. Marking tape:
   1. Install a detectable marking tape 12 inches above the duct bank the entire length of the duct bank.

3.04 ERECTION, INSTALLATION, APPLICATION, CONSTRUCTION (NOT USED)

3.05 REPAIR/RESTORATION (NOT USED)

3.06 RE-INSTALLATION (NOT USED)

3.07 COMMISSIONING (NOT USED)

3.08 FIELD QUALITY CONTROL

A. As specified in Section 16050 - Common Work Results for Electrical.

3.09 ADJUSTING (NOT USED)

3.10 CLEANING

A. Clean conduits of dirt and debris by use of an appropriately sized steel mandrel no less than 1/2 inch smaller than the inside diameter of the conduit.

3.11 PROTECTION

A. As specified in Section 16050 - Common Work Results for Electrical.

B. Provide shoring and pumping to protect the excavation and safety of workers.

C. Protect excavations with barricades as required by applicable safety regulations.

3.12 SCHEDULES (NOT USED)

END OF SECTION

THIS PAGE INTENTIONALLY LEFT BLANK FOR DOUBLE SIDED PRINTING

SECTION 261340

BOXES

PART 1 GENERAL

1.1 SUMMARY

A. Section includes:
   1. Device boxes.
   2. Raceway system boxes.

1.2 REFERENCES

A. As specified in the Common Work Results for Electrical section.

B. American Association of State Highway and Transportation Officials (AASHTO):
   1. Standard Specifications for Highway Bridges.

C. ASTM International (ASTM):
   1. A47 - Standard Specification for Ferritic Malleable Iron Castings.
   2. D149 - Standard Test Method for Dielectric Breakdown Voltage and Dielectric Strength of Solid Electrical Insulating Materials at Commercial Power Frequencies.
   3. D495 - Standard Test Method for High-Voltage, Low-Current, Dry Arc Resistance of Solid Electrical Insulation.
   4. D570 - Standard Test Method for Water Absorption of Plastics.
   5. D648 - Standard Test Method for Deflection Temperature of Plastics Under Flexural Load in the Edgewise Position.
   6. D790 - Standard Test Methods for Flexural Properties of Unreinforced and Reinforced Plastics and Electrical Insulating Materials.
   7. D792 - Standard Test Methods for Density and Specific Gravity (Relative Density) of Plastics by Displacement.

D. Joint Industry Conference (JIC).

E. Underwriters Laboratories, Inc. (UL):
   1. 94 - Standard for Tests for Flammability of Plastic Materials for Parts in Devices and Appliances.

1.3 DEFINITIONS

A. As specified in the Common Work Results for Electrical section.

B. Specific definitions:
   1. Arcing parts: Circuit breakers, motor controllers, switches, fuses, or any device intended to interrupt current during its operation.
   2. Raceway system boxes: Boxes that are used for wire and cable pullboxes, conduit junction boxes, or terminal boxes.

1.4 SYSTEM DESCRIPTION

A. Provide outlet boxes for devices such as switches, receptacles, telephone and computer jacks, security systems, junction, and pullboxes for use in the raceway systems, etc.

B. Provide boxes as indicated on the Drawings or as needed to complete the raceway installation.

1.5 SUBMITTALS

A. Furnish submittals as specified in the Common Work Results for Electrical section.

B. Product data:
   1. Manufacturer.
   2. Materials.
   3. Dimensions:
      a. Height.
      b. Width.
      c. Depth.
      d. Weight.
      e. NEMA rating.
   4. Conduit entry locations.
   5. Catalog cut sheets.
   6. Installation instructions.

C. Shop drawings:
   1. Include identification and sizes of pullboxes.

1.6 QUALITY ASSURANCE

A. As specified in the Common Work Results for Electrical section.

B. Regulatory requirements:
   1. Outlet boxes shall comply with all applicable standards of:
      a. JIC.
      b. NEC.
      c. NEMA.
      d. UL.

1.7 DELIVERY, STORAGE, AND HANDLING

A. As specified in the Common Work Results for Electrical section.

1.8 PROJECT OR SITE CONDITIONS

A. As specified in the Common Work Results for Electrical section.

1.9 SEQUENCING

A. As specified in the Common Work Results for Electrical.

1.10 SCHEDULING (NOT USED)

1.11 WARRANTY

A. As specified in the Common Work Results for Electrical section.

1.12 SYSTEM START-UP

A. As specified in the Common Work Results for Electrical section.

1.13 OWNER'S INSTRUCTIONS (NOT USED)

1.14 MAINTENANCE (NOT USED)

PART 2 PRODUCTS

2.1 MANUFACTURERS

A. One of the following or equal:
   1. Cast device boxes:
      a. Appleton.
      b. Crouse - Hinds.
      c. OZ/Gedney.
   2. Stainless steel enclosures:
      a. Hoffman.
      b. Stahlin.
      c. Rittal.

2.2 EXISTING PRODUCTS (NOT USED)

2.3 MATERIALS (NOT USED)

2.4 MANUFACTURED UNITS

A. Cast device boxes:
   1. Construction:
      a. With internal green ground screw.
      b. Furnished with a suitable gasketed cover.
      c. With integral cast mounting lugs when surface mounted.
      d. Conduit sizes range from 3/4 inch to 1 inch.
      e. Tapered threaded hubs with integral bushing.
   2. Malleable iron boxes:
      a. Conforming to ASTM A47 Grade 32510.

B. Plastic coated cast device boxes:
   1. Construction:
      a. With internal green ground screw.
      b. Furnished with a suitable gasketed cover.
      c. With integral cast mounting lugs when surface mounted.
      d. Conduit sizes range from 3/4 inch to 1 inch.
      e. Double coated with a nominal 0.002-inch (2 mil) urethane on both the interior and exterior before application of PVC coating.
      f. With a minimum 0.040-inch (40 mil) PVC coating bonded to exterior.
      g. With pressure sealing sleeve to protect the connection with conduit.

C. Class I Division 1 areas:
   1. Provide boxes designed and listed for Class I Division 1 locations and group type atmosphere in which they will be used:
      a. The approval ratings must be permanently marked on each item.

D. Class I, Division 2 areas:
   1. For boxes not containing arcing parts:
      a. As specified in the Common Work Results for Electrical section.
      b. Pressed metal boxes are not allowed.
   2. For boxes containing arching parts provide:
      a. Boxes designed and listed for Class I Division 1 locations and group type atmosphere in which they will be used:
         1) The approval ratings must be permanently marked on each item.

3. Cast iron Cast copper - free aluminum box and cover.
4. Precision machined flame path between box and cover with neoprene o-ring.
5. For applications requiring hinged cover, provide flexible hinge mounting either left or right side.
6. External flange.
7. Provisions for mounting pan.
8. Ground lug.
9. Stainless steel:
    a. NEMA Type 4X:
        1) Boxes in locations subject to flooding or temporary submersion:
            a) NEMA Type 6.
    b. Fabricated from 14-gauge Type 316 stainless steel.
    c. All seams continuously welded.
    d. Door:
        1) Rolled lip around 3 sides.
        2) Attached to enclosure by means of a continuous stainless steel hinge and pin.
    e. Neoprene door gasket to provide a watertight seal:
        1) Attached with an adhesive.
        2) Retained by a retaining strip.
    f. Fabricate all external removable hardware for clamping the door to the enclosure body from heavy gauge stainless steel:
        1) With a hasp and staple for padlocking.
    g. Provide large enclosures with door and body stiffeners for extra rigidity.
    h. No holes or knockouts.
    i. Finish:
        1) Brushed.
    j. Stainless steel external mounting brackets when surface mounted.

2.5 EQUIPMENT (NOT USED)

2.6 COMPONENTS (NOT USED)

2.7 ACCESSORIES

A. Fasteners:
    1. Electroplated or stainless steel in boxes with wiring devices.
    2. Screws, nuts, bolts, and other threaded fasteners:
        a. Stainless steel.

B. Provide breather and drain fittings where appropriate.

C. Internal panels:
    1. Provide internal panels where required for mounting of terminal strips or other equipment.
    2. With plated steel shoulder studs.
    3. Steel with white polyester powder finish.

2.8 MIXES (NOT USED)

2.9 FABRICATION (NOT USED)

2.10 FINISHES (NOT USED)

2.11 SOURCE QUALITY CONTROL (NOT USED)

PART 3 EXECUTION

3.1 EXAMINATION (NOT USED)

3.2 PREPARATION (NOT USED)

3.3 INSTALLATION

A. As specified in the Common Work Results for Electrical section.

B. General:
1. Provide materials and construction suitable for environmental conditions at the location of the box as specified in the Common Work Results for Electrical section.
2. Provide outlet box materials to match the conduit system:
   a. GRC - Cast ferrous boxes.
   b. PCS - PVC coated cast ferrous boxes.
   c. PVC - PVC boxes.
3. Solid type gang boxes:
   a. For more than 2 devices.
   b. For barriered outlets.
4. Support all wall mounted NEMA Type 4 or NEMA Type 4X boxes to maintain a minimum of 7/8-inch free air space between the back of the enclosure and the wall:
   a. Use machined spacers to maintain air space; built-up washers are not acceptable.
   b. Use stainless steel or nylon materials for spacers.
5. Use cast malleable iron boxes when box must support other devices.
6. Boxes serving luminaires or devices:
   a. Use as pullboxes wherever possible.
7. Fit all cast boxes and pressed steel boxes for flush mounting in concrete with cast, malleable box covers and gaskets.
8. In terminal boxes, furnish terminals as indicated on the Drawings, with a minimum of 50 percent spare terminals:
   a. Furnish wireways for discrete and analog/DC wiring.
   b. Separate analog wiring from 120 V discrete or power wiring.
9. Size boxes in accordance with NEC requirements and to provide sufficient room for the future components and cables indicated on the Drawings.
10. For fire-rated construction, provide materials and installation for use in accordance with the listing requirements of the classified construction.

C. Outlet boxes:
1. Locate outlet boxes as indicated on the Drawings:
   a. Adjust locations so as not to conflict with structural requirements or other trades.
2. Use deep threaded-hub malleable iron or aluminum boxes:
   a. In hazardous areas.
   b. Where exposed to the weather.
   c. In unheated areas.
   d. Where subject to mechanical damage:
      1) Defined as exposed boxes less than 10 feet above the floor.
   e. To act as a pullbox for conductors in a conduit system.
   f. Accommodate wiring devices.
3. Use deep threaded-hub plastic coated malleable iron boxes in corrosive and NEMA Type 4X area and when the conduit system is PVC coated steel.
4. Outlet boxes may be used as junction boxes wherever possible.

D. Pullboxes and junction boxes:
1. Size pullboxes in accordance with NEC requirements and to provide sufficient room for any future conduits and cables as indicated on the Drawings.

2. Install pullboxes such that access to them is not restricted.

E. For boxes not indicated:
   1. Provide types and mountings as required to suit the equipment and that will be consistent with the conduit system and environmental conditions as indicated in the Common Work Results for Electrical section.
   2. Outlet, switch, and junction boxes for flush-mounting in general purpose locations:
      a. One-piece, galvanized, pressed steel.
   3. Ceiling boxes for flush mounting in concrete:
      a. Deep, galvanized, pressed steel.
   4. Outlet, switch, and junction boxes where surface mounted in exposed locations:
      a. Cast ferrous boxes with mounting lugs, zinc or cadmium plating finish.
   5. Outlet, control station, and junction boxes for installation in corrosive locations:
      a. Fiberglass reinforced polyester, stainless steel, or plastic coated steel to match the conduit system.
      b. Furnished with mounting lugs.

F. Hazardous locations:
   1. All metallic boxes, fittings, and joints shall utilize threaded connections to the conduit system.
   2. All threaded connections shall be wrench tightened so that at least 5 threads are fully engaged.
   3. Conduits entering and exiting metallic boxes in Class I Division 2 areas shall utilize approved grounding bushings to bond the conduits together.
   4. Provide the following types of conduit bodies and boxes:
      a. Malleable iron bodies and boxes with GRC or IMC conduit systems.
      b. PVC coated conduit bodies and boxes with PCS conduit systems.

3.4 ERECTION, INSTALLATION, APPLICATION, CONSTRUCTION (NOT USED)

3.5 REPAIR/RESTORATION (NOT USED)

3.6 REINSTALLATION (NOT USED)

3.7 COMMISSIONING

A. As specified in the Commissioning section.

3.8 FIELD QUALITY CONTROL

A. As specified in the Common Work Results for Electrical section.

3.9 ADJUSTING (NOT USED)

3.10 CLEANING

A. As specified in the Common Work Results for Electrical section.

3.11 PROTECTION

A. As specified in the Common Work Results for Electrical section.

3.12 SCHEDULES (NOT USED)

END OF SECTION

SECTION 261360

WIREWAY

PART 1 GENERAL

1.1 SUMMARY

A. Section includes:
1. Wireway systems as indicated on the Drawings.

1.2 REFERENCES

A. As specified in the Common Work Results for Electrical section.

B. National Electrical Manufacturers Association (NEMA):
1. ICS-6 - Industrial Control and Systems: Enclosures.

C. Underwriter's Laboratories (UL):
1. Article 870 - Wireways, Auxiliary Gutters, and Associated Fittings.

1.3 DEFINITIONS

A. As specified in the Common Work Results for Electrical section.

1.4 SYSTEM DESCRIPTION

A. System includes horizontal and/or vertical straight runs of wireway, fittings, covers, splices, barriers, and related accessory and supports:
1. Connected to form a complete system.

1.5 SUBMITTALS

A. Furnish submittals as specified in the Common Work Results for Electrical section.

B. Product data:
1. Technical information:
a. Catalog cut sheets.
b. Wireway construction and materials.
c. Maximum loading and span.
d. NEMA enclosure type.
2. Dimensions:
a. Width.
b. Depth.
3. Weight of wireway sections and fittings.
4. Complete bill of materials.
5. Manufacturer's installation instructions.

C. Shop drawings:
1. Provide complete details and scaled drawings for the layout of the installed wireway system showing all components and proposed mounting details.

D. Calculations:

1. Provide cross sectional area and fill calculations.
    a. Cross sectional area and fill shall be in accordance with the NEC.
2. Provide structural calculations to ensure that the installed system meets all structural, seismic as specified in the Common Work Results for Electrical section, wind as specified in the Common Work Results for Electrical Requirements section at the Project Site with respect to support and mounting:
    a. Stamped by a professional engineer licensed in the state where the Project is being constructed.

1.6 QUALITY ASSURANCE

A. As specified in the Common Work Results for Electrical section.

B. Manufacturer qualifications:
    1. Member of NEMA for the manufacturer of wireway systems and fittings of types and capacities required.

C. Wireway shall be UL listed and labeled.

1.7 DELIVERY, STORAGE, AND HANDLING

A. As specified in the Common Work Results for Electrical section.

1.8 PROJECT OR SITE CONDITIONS

A. As specified in the Common Work Results for Electrical section.

1.9 SEQUENCING

A. The Drawings indicate the general route of the wireway systems. Data presented on those drawings are as accurate as preliminary surveys and planning can determine until final equipment selection is made.

B. Specifications and Drawings are for assistance and guidance but exact routing, locations, distances, and levels will be governed by actual field conditions. Make field surveys as part of the work before ordering material.

1.10 SCHEDULING (NOT USED)

1.11 WARRANTY

A. As specified in the Common Work Results for Electrical section.

1.12 SYSTEM START-UP

A. As specified in the Common Work Results for Electrical section.

1.13 OWNER’S INSTRUCTIONS (NOT USED)

1.14 MAINTENANCE (NOT USED)

PART 2 PRODUCTS

2.1 MANUFACTURERS

A. Metallic wireway:
1. One of the following or equal:
   a. B-Line.
   b. Hoffman.
   c. Hammond.
   d. Rittal Electromate.

B. Non-metallic wireway:
1. One of the following or equal:
   a. Hoffman.
   b. Carlon.

2.2 EXISTING PRODUCTS (NOT USED)

2.3 MATERIALS (NOT USED)

2.4 MANUFACTURED UNITS (NOT USED)

2.5 EQUIPMENT

A. Provide wireways as indicated on the Drawings with respect to:
1. Type (lay-in or feed-through or trough).
2. Dimensions.
3. NEMA enclosure rating.
4. Wireway material.

2.6 COMPONENTS

A. Fittings:
1. Elbows, tees, and crossings:
   a. Of the same materials and construction as the straight runs.
2. Expansion fittings:
   a. Provide flexible or sliding fittings.

B. Covers:
1. Hinged on one side.

2.7 ACCESSORIES

A. Mounting hardware:
1. As specified in the Common Work Results for Electrical section.

2.8 MIXES (NOT USED)

2.9 FABRICATIONS (NOT USED)

2.10 FINISHES (NOT USED)

2.11 SOURCE QUALITY CONTROL

A. Manufactured in accordance with NEMA ICS-6.

PART 3 EXECUTION

3.1 EXAMINATION

A. Verify all dimensions and route before ordering wireway:
   1. Make all necessary field measurements.
   2. Coordinate with all subcontractors and suppliers to determine structural dimensions and equipment dimensions to avoid all potential conflicts with other systems.

3.2 PREPARATION (NOT USED)

3.3 INSTALLATION

A. As specified in the Common Work Results for Electrical section.

B. Install the wireway per the manufacturer's guidelines and submitted installation instructions to meet the seismic and wind requirements at the project site.

C. General:
   1. Install in straight runs as much as possible, minimizing the number of turns.
   2. Expansion fittings:
      a. Install as recommended by the manufacturer to accommodate thermal expansion.
      b. Install where wireway crosses structural expansion joints.
   3. Fittings:
      a. Not all fittings are indicated on the Drawings:
         1) Provide all fittings required to suit the installation.
   4. Wireway supports:
      a. Support wireway in accordance with manufacturer's instructions and as required by the seismic conditions.
      b. Support bracket spacing shall meet the requirements of the wireway manufacturer, and NEC.
      c. Provide wireway supports with channels under the entire width of wireway.
      d. Secure wireway to supports with manufacturer-approved fittings.
   5. Mounting:
      a. Oriented to allow hinged doors to be opened minimum 90 degrees.
      b. Oriented to allow safe access to doors for maintenance and future installations.
   6. Wiring installation:
      a. In accordance the NEC.
      b. Begin wiring installation only after the complete raceway system is installed.
      c. Verify that all wireway surfaces and accessories are smooth, free from burrs or sharp edges.
      d. Only install wiring that is UL listed for wireway use.
   7. Wall penetrations:
      a. Terminate wireway on both sides of penetration, and penetrate wall via conduits:
         1) Seal all open spaces inside and around conduits where they penetrate building exterior walls or fire-rated walls.
         2) Fill spare conduits with sealing compound.
         3) Provide sealing material in accordance with all applicable codes and regulations.

3.4 ERECTION, INSTALLATION, APPLICATION, AND CONSTRUCTION (NOT USED)

3.5 REPAIR/RESTORATION (NOT USED)

3.6 PRE-INSTALLATION (NOT USED)

3.7 COMMISSIONING

A. As specified in the Commissioning section.

3.8 FIELD QUALITY CONTROL

A. As specified in the Common Work Results for Electrical section.

B. Inspect entire wireway system for the following:
   1. Secure anchoring.
   2. Proper supports.
   3. Burrs or sharp edges.
   4. Sufficient clearance from ducts and piping, especially hot pipes.

3.9 ADJUSTING (NOT USED)

3.10 CLEANING

A. As specified in the Common Work Results for Electrical section.

3.11 PROTECTION

A. As specified in the Common Work Results for Electrical section.

3.12 SCHEDULES (NOT USED)

END OF SECTION

THIS PAGE INTENTIONALLY LEFT BLANK FOR DOUBLE SIDED PRINTING

SECTION 261400

WIRING DEVICES

PART 1 GENERAL

1.1 SUMMARY

A. Section includes:
   1. Switches.
   2. Receptacles.
   3. Plates.

1.2 REFERENCES

A. As specified in the Common Work Results for Electrical section.

B. Federal Specifications (FS):
   1. W-C 596 - Connector, Electrical, Power, General Specification for.
   2. W-S 896/2 - Switches, Toggle (Toggle and Lock), Flush Mounted (General Specification).

C. National Electrical Manufacturers Association (NEMA):
   1. WD1 - General Color Requirements for Wiring Devices.
   2. ICS 5 - Industrial Control and Systems, Control Circuit and Pilot Devices.
   3. OS1 - Sheet-Steel Outlet Boxes, Device Boxes, Covers and Box Supports.
   4. WD6 - Wiring Devices Dimensional Specifications.

D. Telecommunications Industry Association:
   1. T568A - Eight-position jack pin/pair assignment.
   2. T568B - Optional eight-position jack pin/pair assignment.

E. Underwriters Laboratories, Inc. (UL):
   1. 20 - General Use Snap Switches.
   2. 498 - Standard for Attachment Plugs and Receptacles.
   3. 514D - Cover Plates for Flush-Mounted Wiring Devices.
   4. 943 - Ground-Fault Circuit-Interrupters.
   5. 1472 - Solid State Dimming Controls.

1.3 DEFINITIONS

A. As specified in the Common Work Results for Electrical section.

B. Specific definitions:
   1. GFCI: Ground fault circuit interrupter.

1.4 SYSTEM DESCRIPTION

A. Switches, receptacles, and plates as indicated on the Drawings wired and operable to form a complete system.

1.5 SUBMITTALS

A. Furnish submittals as specified in the Common Work Results for Electrical section.

B. Product data:
   1. Catalog cut sheets.

C. Shop drawings:
   1. Engraving schedule:
      a. Furnish complete engraving schedule for engraved nameplates.

1.6 QUALITY ASSURANCE

A. As specified in the Common Work Results for Electrical section.

B. Wiring devices shall be UL listed and labeled.

1.7 DELIVERY, STORAGE, AND HANDLING

A. As specified in the Common Work Results for Electrical section.

1.8 PROJECT OR SITE CONDITIONS

A. As specified in the Common Work Results for Electrical section.

1.9 SEQUENCING (NOT USED)

1.10 SCHEDULING (NOT USED)

1.11 WARRANTY

A. As specified in the Common Work Results for Electrical section.

1.12 SYSTEM START-UP

A. As specified in the Common Work Results for Electrical section.

1.13 OWNER'S INSTRUCTIONS (NOT USED)

1.14 MAINTENANCE (NOT USED)

PART 2 PRODUCTS

2.1 MANUFACTURERS

A. Switches:
   1. One of the following or equal:
      a. Hubbell.
      b. Leviton.
      c. Cooper Wiring Devices.
   2. Switches for hazardous areas:
      a. One of the following or equal:
         1) Appleton.
         2) Crouse-Hinds.

B. Receptacles:
    1. General purpose receptacles:
        a. One of the following or equal:
            1) Hubbell.
            2) Leviton.
            3) Cooper Wiring Devices.
    2. Receptacles for hazardous areas:
        a. One of the following or equal:
            1) Crouse-Hinds.
            2) Appleton.

C. Plates:
    1. General location:
        a. One of the following or equal:
            1) Legrand.
            2) Cooper Wiring Devices.
    2. Wet or corrosive areas:
        a. One of the following or equal:
            1) Hubbell.
            2) Cooper Wiring Devices.
            3) Thomas and Betts.
            4) Pass and Seymour.
    3. In-use covers:
        a. One of the following or equal:
            1) TayMac.
            2) Cooper Wiring Devices.
            3) Pass and Seymour.
            4) Thomas and Betts.

2.2 EXISTING PRODUCTS (NOT USED)

2.3 MATERIALS (NOT USED)

2.4 MANUFACTURED UNITS

A. Switches:
    1. General:
        a. 120-277 VAC.
        b. 20 ampere.
        c. Listed in accordance with UL 20.
        d. Designed and constructed in accordance with FS W-S-896/2.
        e. Back and side wired unless otherwise indicated.
        f. Integral grounding terminal.
        g. Totally enclosed:
            1) Color-coded body with color corresponding to ampere rating.
        h. Provide switches with the operator style and contact arrangement as indicated on the Drawings and as required for proper operation.
        i. Color:
            1) Ivory in finished areas.
            2) Brown in all other areas.
    2. General purpose switches:
        a. Toggle type.
    3. Switches for office areas:
        a. Rocker type.
        b. Rectangular.
    4. Switches for use with photocell:

a. Maintained contact.
b. 2 circuit.
c. 3 position:
1) Center off.

5. Switches for hazardous areas:
a. Suitable for use in Class I Division 1 and Class I Division 2 locations.
b. Factory sealed.
c. Through-feed or dead-end as required.

B. Receptacles:
1. General purpose receptacles:
a. Single or duplex as indicated on the Drawings.
b. 125 VAC.
c. 20 ampere or as indicated on the Drawings.
d. NEMA Type 5-20R configuration for 20 ampere receptacles.
e. Other NEMA configurations as indicated on the Drawings.
f. Listed in accordance with UL 498.
g. Designed and constructed in accordance with FS W-C-596.
h. Back and side wired.
i. 1-piece, rivet-less mounting strap.
j. Color:
1) Ivory in finished areas.
2) Brown in all other areas.
3) Orange when powered by a UPS.

2. Ground fault interrupter receptacles (GFCI):
a. 125 VAC.
b. 20 ampere.
c. Trip level 4-6 milliamperes.
d. Individual and feed through protection.
e. UL 943 and UL 498 listed.
f. NEMA Type 5-20R configuration.
g. For damp or wet locations:
1) Weather resistant, in accordance with UL 498.

3. Receptacles for hazardous areas:
a. 125 VAC.
b. 20 ampere.
c. Factory sealed.
d. Single receptacle.
e. 2-wire, 3-pole.
f. Grounded through extra pole and shell.
g. Dead-front construction.
h. Interlocked to prevent plug from being withdrawn until circuit has been broken.

C. Plates:
1. General location:
a. Type 302 or 304 stainless steel.
b. Brushed satin finish.
c. Minimum thickness: 0.032 inches.
d. Rectangular or square shape.
e. Engraving:
1) Engrave each switch plate with the following:
a) Area served.
b) Panelboard and Circuit.
2) Engrave each receptacle plate with the following:
a) Panelboard and Circuit.
3) Treat engraving to improve visibility.

4) Characters shall be block letter pantograph engraved with a minimum character height of 1/8-inch.

f. Coordinate the number of gangs, number, and type of openings with the specific location.

2. Outdoor and wet areas requiring NEMA Type 4 or NEMA Type 4X enclosures:
   a. General:
      1) UL listed for wet locations.
      2) Gasketed.
      3) Die cast metal:
         a) Match material to box material.
   b. Switches:
      1) Lever operated:
         a) Provide toggle switch.
   c. Receptacles:
      1) Weather proof in-use cover:
         a) Die cast metal construction with electrostatic powder coating for corrosion resistance.
         b) Gasketed.
         c) Lockable.
         d) UL listed and in accordance with NEC.
3. Corrosive areas:
   a. Neoprene.
   b. Gasketed.
   c. Weatherproof.

2.5 EQUIPMENT (NOT USED)

2.6 COMPONENTS (NOT USED)

2.7 ACCESSORIES (NOT USED)

2.8 MIXES (NOT USED)

2.9 FABRICATION (NOT USED)

2.10 FINISHES (NOT USED)

2.11 SOURCE QUALITY CONTROL (NOT USED)

PART 3 EXECUTION

3.1 EXAMINATION (NOT USED)

3.2 PREPARATION (NOT USED)

3.3 INSTALLATION

A. As specified in the Common Work Results for Electrical section.

B. Mounting heights:
   1. Process and production areas:
      a. Switches and receptacles 48 inches from finished floor to top of plate.
   2. Offices and finished areas:
      a. Switches: 48 inches from finished floor to top of plate.

b. Receptacles: 18 inches from finished floor to center of plate.

C. Receptacles:
1. Provide GFCI receptacles as indicated on the Drawings.
a. Provide weather resistant GFCI receptacles in all wet or damp areas.
1) As specified in the Common Work Results for Electrical section.
2. Mount non-weatherproof receptacles vertically:
a. Ground slot down.
3. Mount weatherproof receptacles horizontally:
a. Neutral slot up.
4. 3-phase receptacles shall be consistent with respect to phase connection at the receptacle terminals. Correct errors in phasing at the source and not the receptacle.

D. Ensure all plates make a firm seal with wall for recessed mounted devices:
1. Outside edges of plates parallel with building lines.

3.4 ERECTION, INSTALLATION, APPLICATION, CONSTRUCTION (NOT USED)

3.5 REPAIR/RESTORATION (NOT USED)

3.6 REINSTALLATION (NOT USED)

3.7 COMMISSIONING

A. As specified in the Commissioning section.

3.8 FIELD QUALITY CONTROL

A. As specified in the Common Work Results for Electrical section.

3.9 ADJUSTING (NOT USED)

3.10 CLEANING (NOT USED)

3.11 PROTECTION

A. As specified in the Common Work Results for Electrical section.

3.12 SCHEDULES (NOT USED)

END OF SECTION

SECTION 261500

LOW VOLTAGE WIRE CONNECTIONS

PART 1 GENERAL

1.1 SUMMARY

A. Section includes:
1. Wire connecting devices.
2. Terminations.
3. Splices.

1.2 REFERENCES

A. As specified in the Common Work Results for Electrical section.

B. ASTM International (ASTM):
1. D3005 - Standard Specification for Low-Temperature Resistant Vinyl Chloride Plastic Pressure-Sensitive Electrical Insulating Tape.

C. CSA International (CSA):
1. C22.2 - No.197-M1983 (R2208) - PVC Insulating Tape.

D. Underwriters Laboratories, Inc. (UL):
1. 510 - Standard for Polyvinyl Chloride, Polyethylene, and Rubber Insulating Tape.

1.3 DEFINITIONS

A. As specified in the Common Work Results for Electrical section.

1.4 SYSTEM DESCRIPTION

A. Provide a complete system of wiring connectors, terminators, fittings, etc. for a complete wiring system suitable for the cables and conductors used.

1.5 SUBMITTALS

A. Furnish submittals as specified in the Common Work Results for Electrical section.

B. Product data:
1. Catalog cut sheets.
2. Installation instructions.

1.6 QUALITY ASSURANCE

A. As specified in the Common Work Results for Electrical section.

B. All materials shall be UL listed.

1.7 DELIVERY, STORAGE, AND HANDLING

A. As specified in the Common Work Results for Electrical section.

1.8 PROJECT OR SITE CONDITIONS

A. As specified in the Common Work Results for Electrical section.

1.9 SEQUENCING (NOT USED)

1.10 SCHEDULING (NOT USED)

1.11 WARRANTY

A. As specified in the Common Work Results for Electrical section.

1.12 SYSTEM START-UP

A. As specified in the Common Work Results for Electrical section.

1.13 OWNER'S INSTRUCTIONS (NOT USED)

1.14 MAINTENANCE (NOT USED)

PART 2 PRODUCTS

2.1 MANUFACTURERS

A. Manufacturers for each type of technology are specified with the equipment in this Section.

2.2 EXISTING PRODUCTS (NOT USED)

2.3 MATERIALS (NOT USED)

2.4 MANUFACTURED UNITS (NOT USED)

2.5 EQUIPMENT

A. Control connections:
   1. Use insulated ring type wire terminators for connections to all screw terminals:
      a. With chamfered/funneled terminal barrel entry.
      b. Deep internal serrations.
      c. Long barrel design to reduce electrical resistance and increased insulator-barrel surface area to ensure that the insulator remains in contact with the barrel.
      d. Electroplated-tin copper conductor.
      e. Manufacturers: The following or equal:
         1) Thomas and Betts, Stakon.
   2. For process equipment connections work from manufacturer's drawings.

B. Joints, splices, taps, and connections:
   1. 600-volt conductors:
      a. Use solderless connectors.
      b. Use only plated copper alloy connectors or lugs:
         1) Aluminum connectors or lugs are not acceptable for copper conductors.
      c. Under those specific conditions where aluminum conductors have been allowed or are specified then the connectors for aluminum conductors shall be specifically designed for that purpose.

d. For wire Number 10 AWG and smaller use compression splice caps, with insulating caps:
    1) Manufacturers: The following or equal:
        a) Buchanan, 2006S or 2011S, with 2007 or 2014 insulating caps.
e. For wire Number 8 AWG and larger, use heavy duty copper compression connectors:
    1) Manufacturers: One of the following or equal:
        a) Burndy.
        b) Thomas and Betts.
f. Heat shrink tubing:
    1) Suitable for indoors, outdoors, overhead, direct burial or submerged applications.
    2) Minimum shrink ratio: 4 to 1.
    3) Continuous operating temperature: -55 degrees Celsius to 110 degrees Celsius.
    4) Internally applied adhesive sealant.
    5) Cross-linked polyolefin:
        a) Manufacturers: One of the following or equal:
            (1) 3M, ITCSN.
            (2) Thomas & Betts, Shrink-Kon.

2. Instrumentation class cable splices:
    a. Suitable for indoor, outdoors, weather exposed, direct buried, or submersed applications.
    b. Utilizing an epoxy, polyurethane, and re-enterable compounds.
    c. For use with shielded or unshielded plastic- and rubber-jacketed, signal, control, and power cables rated up to 1 kilovolt.
    d. Two-part mold body with tongue and groove seams and built in spacer webbing.
    e. Manufacturers: The following or equal:
        1) 3M, Scotchcast 72-N.

C. Insulating tape:
1. General purpose insulating tape:
    a. Minimum 7 mil vinyl tape.
    b. Suitable for application in an ambient of -18 degrees Celsius (0 degrees Fahrenheit).
    c. Operating range up to 105 degrees Celsius (220 degrees Fahrenheit).
    d. Flame retardant, hot- and cold- weather resistant, UV resistant.
    e. For use as a primary insulation for wire cable splices up to 600 VAC.
    f. Meeting and complying with:
        1) ASTM D3005 Type I.
        2) UL 510.
        3) CSA C22.2.
    g. Manufacturers: The following or equal:
        1) 3M, Scotch Number Super 33+.
2. General-purpose color-coding tape:
    a. Minimum 7 mil vinyl tape.
    b. Suitable for application on PVC and polyethylene jacketed cables.
    c. For use indoors and outdoors in weather protected enclosures.
    d. Available with the following colors:
        1) Red.
        2) Yellow.
        3) Blue.
        4) Brown.
        5) Gray.
        6) White.
        7) Green.

8) Orange.
9) Violet.

e. For use as phase identification, marking, insulating, and harnessing.

f. Meeting and complying with:
1) UL 510.
2) CSA C22.2.

g. Manufacturers: The following or equal:
1) 3M, Scotch Number 35.

2.6 COMPONENTS (NOT USED)

2.7 ACCESSORIES (NOT USED)

2.8 MIXES (NOT USED)

2.9 FABRICATION (NOT USED)

2.10 FINISHES (NOT USED)

2.11 SOURCE QUALITY CONTROL (NOT USED)

PART 3 EXECUTION

3.1 EXAMINATION (NOT USED)

3.2 PREPARATION (NOT USED)

3.3 INSTALLATION

A. As specified in the Common Work Results for Electrical section.

B. Load connections:
1. Connect loads to the circuits as indicated. Color-code all branch circuits as specified in Section 16123 - 600-Volt or Less Wires and Cables.

C. Zero to 600-volt systems:
1. Make all connections with the proper tool and die as specified by the device manufacturer.
2. Use only tooling and dies manufactured by the device manufacturer.
3. Insulate all connections and splices with Scotch 33+ tape and Scotchfill, or pre-molded plastic covers, or heat shrink tubing and caps.
4. Number all power and control wires before termination.

D. Motor connections (600 volts and below):
1. Terminate all leads and wires with compression type ring lugs.
2. Terminations on all motor leads, including leads that are connected together to accommodate the motor voltage, and the machine wires entering the motor terminal box from the power source, shall have ring type compression lugs.
3. Cover bolted connectors with a heat shrinkable, cross-linked polyolefin material formed as a single opening boot:
a. In damp and wet locations, use a complete kit containing mastic that shall seal out moisture and contamination.
b. Shrink cap with low heat as recommended by manufacturer.
4. Wire markers shall be readable after boot installation.

5. Manufacturers: The following or equal:
   a. Raychem, MCK.

3.4 ERECTION, INSTALLATION, APPLICATION, CONSTRUCTION (NOT USED)

3.5 REPAIR/RESTORATION (NOT USED)

3.6 RE-INSTALLATION (NOT USED)

3.7 COMMISSIONING

A. As specified in the Commissioning section.

3.8 FIELD QUALITY CONTROL

A. As specified in the Common Work Results for Electrical section.

3.9 ADJUSTING (NOT USED)

3.10 CLEANING (NOT USED)

3.11 PROTECTION

A. As specified in the Common Work Results for Electrical section.

3.12 SCHEDULES (NOT USED)

END OF SECTION

THIS PAGE INTENTIONALLY LEFT BLANK FOR DOUBLE SIDED PRINTING

SECTION 262100

UTILITY COORDINATION

PART 1 GENERAL

1.1 SUMMARY

A. Section includes:
   1. Coordination with the utility companies to provide service.
   2. Contractor's responsibilities for connecting to utilities and providing utility service to the facilities.
   3. Descriptions of utility services required.

1.2 REFERENCES

A. As specified in the Common Work Results for Electrical section.

1.3 DEFINITIONS

A. As specified in the Common Work Results for Electrical section.

1.4 SYSTEM DESCRIPTION

A. Electrical service:
   1. Provide all Work and materials and bear all costs for providing temporary construction power and the permanent electrical service, including but not limited to:
      a. All Work and materials not provided by the electric utility.
      b. All permits and fees required by the electric utility.
   2. Provide electrical ducts, raceways, conductors and connections indicated on the Drawings, and all other Work and materials required for a complete electrical service, including but not limited to the following:
      a. Electrical service conduits and conductors from the point of electric utility connection to the service entrance equipment.
      b. Metering conduits from the instrument transformers to the meter.

B. Telephone service:
   1. Provide all Work and materials and bear all costs for the telephone service during construction:
      a. All permits and fees required by the telephone utility.
   2. Provide the telephone entrance conduit(s) from the terminal pole/pedestal to the telephone board, and all other Work and materials required for a complete telephone service.

C. General:
   1. Coordinate and obtain inspections and final installation approval from the serving utilities and other authorities having jurisdiction.

1.5 SUBMITTALS

A. Furnish submittals as specified in the Common Work Results for Electrical section.

B. Certification:

1. Submit certification that the intended installation has been coordinated with the utility companies.
2. Include a narrative description of the utility's requirements and points of connection, names and telephone numbers for contacts at the utilities.

1.6 QUALITY ASSURANCE

A. As specified in the Common Work Results for Electrical section.

B. Materials and equipment used in performance of Electrical Work shall be listed or labeled by UL, or other equivalent recognized independent testing laboratory, for the class of service intended.

1.7 DELIVERY, STORAGE, AND HANDLING (NOT USED)

1.8 PROJECT OR SITE CONDITIONS

A. As specified in the Common Work Results for Electrical section.

1.9 SEQUENCING (NOT USED)

1.10 SCHEDULING

A. General:
1. Before start of Site Work, make arrangements for temporary telephone and electrical service as required.

B. Electrical systems:
1. Before bidding, the electrical contractor shall contact the utilities to determine the Work and materials that will be required from the Contractor, and all fees and permits that will be required, so that all utility systems furnished by the Contractor will be included in the bid.
2. Coordinate Work with Engineer to minimize downtime of existing operating equipment and electrical distribution systems and to preclude unsafe operation:
   a. Notify Owner 10 days before power interruptions.
   b. Coordinate downtime with Owner and local electric utility.
3. Before commencing Work, coordinate electric service entrance requirements with local electric utility to ensure that the installation will be complete as specified in these Contract Documents:
   a. Ensure power transformer size, electrical characteristics, and location are consistent with the design and service voltage provided by the electric utility coordinated with other trades.
   b. Arrange for utility revenue meter.
   c. Coordinate installation of metering CTs and PTs furnished by the electric utility.
   d. Pay any charges required by the electric utility for connection and turn-on.

C. Telephone systems:
1. Before commencing Work, coordinate complete telephone service:
   a. Verify compliance with telephone utility requirements.
   b. Verify exact location of each service point and type of service.
   c. Pay any charges required by the telephone utility for connection and turn-on.
2. Coordinate complete telephone line connections at locations indicated on the Drawings with the local telephone utility.

D. Before commencing Site Work, coordinate underground conduit installations with other Work to eliminate conflicts and avoid interferences with other underground systems.

1.11 WARRANTY

A. As specified in the Common Work Results for Electrical section.

1.12 SYSTEM START-UP

A. As specified in the Common Work Results for Electrical section.

1.13 OWNER'S INSTRUCTIONS (NOT USED)

1.14 MAINTENANCE (NOT USED)

PART 2 PRODUCTS

2.1 MANUFACTURERS (NOT USED)

2.2 EXISTING PRODUCTS (NOT USED)

2.3 MATERIALS

A. Furnish materials in accordance with the applicable requirements of the utilities and as specified in these Specifications.

2.4 MANUFACTURED UNITS (NOT USED)

2.5 EQUIPMENT

A. Furnish equipment in accordance with the applicable requirements of the utilities and as specified in these Specifications.

2.6 COMPONENTS (NOT USED)

2.7 ACCESSORIES (NOT USED)

2.8 MIXES (NOT USED)

2.9 FABRICATION (NOT USED)

2.10 FINISHES (NOT USED)

2.11 SOURCE QUALITY CONTROL (NOT USED)

PART 3 EXECUTION

3.1 EXAMINATION (NOT USED)

3.2 PREPARATION (NOT USED)

3.3 INSTALLATION

A. As specified in the Common Work Results for Electrical section.

3.4 ERECTION, INSTALLATION, APPLICATION, CONSTRUCTION (NOT USED)

3.5 REPAIR/RESTORATION (NOT USED)

3.6 RE-INSTALLATION (NOT USED)

3.7 COMMISSIONING

A. As specified in the Commissioning section.

3.8 FIELD QUALITY CONTROL

A. As specified in the Common Work Results for Electrical section.

3.9 ADJUSTING (NOT USED)

3.10 CLEANING

A. As specified in the Common Work Results for Electrical section.

3.11 PROTECTION

A. As specified in the Common Work Results for Electrical section.

3.12 SCHEDULES (NOT USED)

END OF SECTION

SECTION 262620

VARIABLE FREQUENCY DRIVES 0.50 - 50 HORSEPOWER

PART 1 GENERAL

1.1 SUMMARY

A. Section includes:
   1. Variable frequency drives (VFD) 0.5 to 50 horsepower for control of NEMA Design B squirrel cage induction motors.
   2. **NOTE: SIZE ALL VFD'S AT 125% OF APPROVED MOTOR NAMEPLATE FLA**

1.2 REFERENCES

A. As specified in the Common Work Results for Electrical section.

B. International Organization for Standardization (ISO):
   1. 9001 - Quality Management Systems - Requirements.

C. National Electrical Manufacturers Association (NEMA):
   1. MGI, Part 31 – Motors with higher peak voltage capability.

D. Underwriters' Laboratories (UL):
   1. 508A - Standard for Safety for Industrial Control Panels.
   2. 508C - Standard for Power Conversion Equipment.
   3. 845 - Standard for Motor Control Centers.

1.3 DEFINITIONS

A. As specified in the Common Work Results for Electrical section.

B. Specific definitions:
   1. Point of common coupling: the point of common coupling for all harmonic calculation and field measurements for both voltage and current distortions is defined as the closest directly connected bus supplying power to the VFD.

1.4 SYSTEM DESCRIPTION

A. Design requirements:
   1. Each VFD system consists of all components required to meet the performance, protection, safety, testing, and certification criteria of this Section.
   2. The VFD system:
      a. Is a fully integrated package.
      b. Includes all material necessary to interconnect all VFD system elements, even if shipped separately.
   3. Coordinate bearing protection methods with the supplier of the driven equipment.

B. Any modifications to a standard product necessary to meet this Section shall be made only by the VFD manufacturer:
   1. Each VFD shall be completely factory pre-wired, assembled, and then tested as a complete system by the VFD manufacturer to ensure a properly coordinated, fully integrated drive system.

2. The VFD shall be capable of operating standard NEMA Design B motors. It is the responsibility of the VFD manufacturer to ensure that the drive will not damage motor insulation due to high carrier frequency, reflected wave, dv/dt or other drive electrical characteristics based upon the installed conditions:
    a. Provide equipment necessary to mitigate potential damage to motor insulation.
    b. Motors as specified in the Low Voltage Motors up to 500 Horsepower section.

C. Performance:
1. Operating envelope:
    a. Speed and torque requirements:
        1) Provide a variable torque or constant torque VFD as required by the driven load.
        2) The VFD shall be capable of producing a variable alternating voltage/frequency output to provide continuous operation over the 40 to 200 percent (25 to 120 hertz) speed range.
    b. Current requirements:
        1) Full rated current output on a continuous basis.
        2) Variable torque VFD:
            a) Minimum 110 percent current overload for 1 minute.
        3) Constant torque VFD:
            a) Minimum 150 percent current overload for 1 minute.
2. Minimum VFD system efficiency:
    a. 96 percent when operating at the rated kW output.
    b. VFD system efficiency shall be calculated as follows:

D.

$$\text{Efficiency (\%)} = \frac{\text{Power (Load)}}{\text{Power (Supply)}} \text{ x } 100$$

E. Power (Load) is the total power measured at the output terminals of the drive system, including VFD, output filters, or transformers. Power (Supply) is the total power measured at the input terminals of the VFD including input filters, line reactors, isolation transformers, harmonic distortion attenuation equipment and auxiliary equipment (e.g., controls, fans) for complete system operation.

1. Total power factor:
    a. Minimum of 0.96 lagging across the entire speed range.
    b. At no speed shall the VFD have a leading power factor.
2. Frequency accuracy:
    a. Minimum of within 0.01 percent.
3. Speed regulation:
    a. Minimum of within 0.5 percent across the entire speed range.

1.5 SUBMITTALS

A. Furnish submittals as specified in the Common Work Results for Electrical section:
1. Custom prepared by the VFD manufacturer and specific for the equipment furnished.

B. Product data:
1. Manufacturer of the VFD.
2. Manufacturer of all components of the VFD.
3. Dimensions:
    a. Height.
    b. Width.
    c. Depth.
    d. Weight.
4. Nameplate schedule.
5. Bill of material.

6. Ratings:
    a. Voltage.
    b. Phase.
    c. Input current.
    d. Output current.
    e. Interrupting rating.
    f. Momentary current rating.
7. List of recommended spare parts.
8. Catalog cut sheets for major components.
9. Design data:
    a. Efficiency and power factor values.
    b. Certification that the drive is sized for the full nameplate motor horsepower and current of the driven load at the installed altitude and ambient temperature.
    c. Certification that based upon VFD design, cable length to motor, and motor dielectric insulation level that the VFD will not damage motor insulation due to carrier frequency, reflected wave, dv/dt, or other VFD produced characteristics.
    d. Certification that all electronic circuits and printed circuit boards are conformally coated.
10. For equipment installed in structures designated as seismic design category C, D, E, or F submit the following as specified in the Common Work Results for Electrical section:
    a. Manufacturer’s statement of seismic qualification with substantiating test data.
    b. Manufacturer’s special seismic certification with substantiating test data.

C. Shop drawings:
1. Complete plan and elevation drawings showing:
    a. All dimensions.
    b. Panel, sub-panel, and component layout indexed to the bill of material.
    c. Conduit connections.
2. Block diagram showing the basic control and protection systems specifying the protection, control, trip and alarm functions, the reference signals and commands and the auxiliary devices.
3. Complete schematic, wiring and interconnection diagrams showing connections to both internal and external devices:
    a. Include terminal number and wire numbers.
4. Complete single-line and 3-line diagrams including, but not limited to, circuit breakers, motor circuit protectors, contactors, instrument transformers, meters, relays, timers, control devices, and other equipment comprising the complete system:
    a. Clearly indicate device electrical ratings on the drawings.

D. Installation instructions:
1. Detail the complete installation of the equipment including rigging, moving, and setting into place.
2. For equipment installed in structures designated as seismic design category A or B:
    a. Provide manufacturer’s installation instructions and anchoring details for connecting equipment to supports and structures.
3. For equipment installed in structures designated as seismic design category C, D, E, or F:
    a. Provide project-specific installation instructions and anchoring details based on support conditions and requirements to resist seismic and wind loads as specified in the Common Work Results for Electrical section.
    b. Submit anchoring drawings with supporting calculations.
    c. Drawings and calculations shall be stamped by a professional engineer registered in the state where the Project is being constructed.

E. Operation and maintenance manuals:

1. Spare parts list with supplier names and part numbers.
2. Startup and commissioning instructions and data.
3. Operating manuals:
    a. Submit operating instructions and a maintenance manual presenting full details for care and maintenance of each model of VFD provided under this Contract.
4. Operating instructions:
    a. Written descriptions detailing the operational functions of all controls on the front panel.
5. Maintenance manual:
    a. Furnish maintenance manuals with instructions covering all details pertaining to care and maintenance of all equipment as well as identifying all parts.
    b. Manuals shall include, but are not limited to the following:
        1) Adjustment and test instructions covering the steps involved in the initial test, adjustment, and start-up procedures.
        2) Detailed control instructions which outline the purpose and operation of every control device used in normal operation.
        3) All schematic wiring and external diagrams:
            a) Furnish drawings in a reduced 11-inch by 17-inch format that are fully legible at that size.

F. Test forms and reports:
1. Submit complete factory acceptance test procedures and all forms used during the test.

G. Manufacturer’s Certificate of Installation and Functionality Compliance.

H. Manufacturer’s field reports:
1. Report listing the setting of all VFD adjustable parameters and their values after start-up.

I. Record Documents:
1. Certified Record Documents of equipment with information listed above.

1.6 QUALITY ASSURANCE

A. As specified in the Common Work Results for Electrical section.

B. Qualifications:
1. Any third-party certification, safety or protection requirements shall be applied to the VFD system as a whole. Certification or protection of system elements or individual components by themselves is not acceptable.
2. VFDs shall be UL 508C listed and labeled:
    a. UL 508C for individual units.
    b. UL 508A for VFD systems in control panels.
    c. UL 845 for VFD systems in motor control centers.
3. Variable frequency drives shall be manufactured by the VFD manufacturer at its own facility which shall have a quality assurance program that is certified in conformance with ISO 9001.

1.7 DELIVERY, STORAGE, AND HANDLING

A. As specified in the Common Work Results for Electrical section.

B. Ship the VFDs and associated equipment to the job site on a dedicated air ride vehicle that will allow the Contractor to utilize on site off loading equipment:
1. VFDs shall be delivered to the site preassembled and wired.

C. Furnish temporary equipment heaters within the VFD to prevent condensation from forming.

1.8 PROJECT OR SITE CONDITIONS

A. As specified in the Common Work Results for Electrical section.

1.9 SEQUENCING

A. Conduct factory acceptance test and submit certified test results for Engineer's review.

B. Ship equipment to project site after successful completion of factory acceptance test.

C. Assemble equipment in the field.

D. Conduct field acceptance test and submit results for Engineer's review.

E. Submit Manufacturers Certificate of Installation and Functionality Compliance.

F. Conduct Owner's training sessions.

G. Commissioning and process start-up as specified in the Commissioning section.

1.10 SCHEDULING

A. As specified in the Common Work Results for Electrical section.

1.11 WARRANTY

A. As specified in the Common Work Results for Electrical section.

1.12 SYSTEM START-UP

A. As specified in the Common Work Results for Electrical section.

B. The VFD manufacturer shall be responsible for start-up of the VFDs in the presence of the equipment suppliers, Contractor, Engineer, and Owner.

1.13 OWNERS INSTRUCTIONS (NOT USED)

1.14 MAINTENANCE

A. Spare parts:
   1. The following spare parts shall be furnished:
      a. 1 set of all power and control fuses for each VFD.
      b. One complete main control key pad for each type and rated size of VFD.
      c. 1 spare fan for each VFD unit.
      d. 2 sets of ventilation filters for each VFD unit (if applicable in VFD cabinet louvers).
      e. 1 set of thyristors or power electronics for each type and rated size of VFD.
      f. Any special dedicated tools for emergency service and troubleshooting.
      g. All hardware and software required for configuration, maintenance, troubleshooting, and inquiry of all drive parameters.

PART 2 PRODUCTS

2.1 MANUFACTURERS

A. One of the following or equal:
1. Eaton.
2. Allen-Bradley.
3. Siemens-Robicon.
4. Schneider Electric.
5. General Electric.
6. ABB.

2.2 EXISTING PRODUCTS (NOT USED)

2.3 MATERIALS (NOT USED)

2.4 MANUFACTURED UNITS (NOT USED)

2.5 EQUIPMENT

A. General:
1. Sinusoidal pulse width modulated (PWM) type drive.
a. 6-pulse insulated gate bipolar transistor (IGBT) power section.
b. Microprocessor based controls.
c. Line and load reactors.

B. Ratings:
1. Voltage:
a. Input voltage as indicated on the Drawings.

C. Operational features:
1. Protective features:
a. Provide the following minimum protective features:
1) Motor overload protection.
2) Instantaneous overcurrent.
3) Instantaneous overvoltage.
4) Undervoltage.
5) Power unit overtemperature.
6) Phase loss.
7) VFD output short circuit.
2. Control mode:
a. Operation in either a constant volts/hertz or sensorless vector mode:
1) The control mode selectable using the programming keypad.
3. Frequency control:
a. Minimum of 3 selectable skip frequencies with adjustable bandwidths.
b. Programmable minimum frequency.
c. Programmable maximum frequency.
4. Acceleration/deceleration:
a. Separately adjustable acceleration and deceleration rates:
1) Each rate adjustable from 0.01 to 1,800 seconds.
5. Spinning load:
a. The VFD shall be capable of determining the speed and direction of a spinning load, “catch” the load and accelerate or decelerate it without damage to the load.
6. Programmable loss of signal:
a. Upon loss of speed reference the VFD shall be programmable to either:
1) Stop.

2) Maintain current speed.
3) Default to pre-selected speed.

7. Power interrupt ride-through:
   a. The VFD shall be capable of continuous operation in the event of a power loss of 5 cycles or less.
8. Inputs/Outputs:
   a. Manufacturer's standard number the following:
      1) Analog inputs:
         a) Configurable as either 0 to 10 volts or 4 to 20 milliamperes.
      2) Analog outputs:
         a) Programmable 4 to 20 milliamperes isolated.
      3) Discrete inputs:
         a) Programmable.
      4) Discrete outputs:
         a) Programmable.
         b) Form C relay contacts.
      5) Potentiometer 3-wire input.
   b. Provide additional inputs/outputs as required to meet the control functions indicated on the Drawings.
9. Communications:
   a. Provide each VFD with a EtherNet i/P Modbus TCP communications interface module.
10. Diagnostics:
    a. Store a minimum of 4 fault conditions in non-volatile memory on a first in-first out basis.
    b. Operational parameters stored at the time of the fault:
       1) Operating frequency.
       2) Drive status.
       3) Power mode.
    c. Fault memory accessible via RS-232, RS-422, or RS-485.
11. Automatic restart:
    a. User selectable automatic restart feature allowing the VFD to restart following a momentary power failure or other VFD fault:
       1) Programmable for up to 9 restart attempts.
       2) Adjustable time delay between restart attempts.

2.6 COMPONENTS

A. Enclosure:
   1. NEMA Type 12 or motor control center as indicated on the Drawings.
   2. Provide cooling devices required to maintain the VFD within the manufacturer's specified temperature limits for the Project conditions:
      a. Provide cooling device failure alarm.

B. Power disconnect:
   1. Flange-mounted thermal magnetic circuit breaker.
   2. Lockable in the OFF position.

C. Input Reactor:
   1. 5 percent input line reactor.

D. Keypad:
   1. Provide each VFD with a keypad for programming and control.
   2. Keypad requirements:
      a. Password security to protect drive parameters.
      b. Mounted on the door of the motor control center.

c. Back-lit LCD:
    1) Minimum of 2 lines with a minimum of 16 characters per line.
d. Programming and display features language: English.
e. Capable of displaying the following parameters:
    1) Speed (percent).
    2) Output current (amperes).
    3) Output frequency (hertz).
    4) Input voltage.
    5) Output voltage.
    6) Total 3-phase kilowatt.
    7) Kilowatt-hour meter.
    8) Elapsed run time meter.
    9) Revolutions per minute.
    10) Direct current bus voltage.

3. In addition to all keys required for programming, provide the following controls on the keypad:
    a. Auto/manual selector.
    b. Start pushbutton.
    c. Stop pushbutton.
    d. Jog pushbutton.
    e. Speed increment.
    f. Speed decrement.
    g. Forward/reverse selector.
    h. Run LED indicator.
    i. Program LED indicator.
    j. Fault LED indicator.
4. Provide the VFD with the hardwired controls as indicated on the Drawings.

E. Control power transformer:
1. Furnish a control power transformer mounted and wired inside the VFD enclosure.
2. With primary and secondary fusing.
3. Sized to power all VFD controls and options as well as any external devices indicated on the Drawings including the motor winding heater.

2.7 ACCESSORIES

A. Metal oxide varistors:
1. Provide protection for the VFD against:
    a. Line transients: 5,000 volt peak minimum.
    b. Line to ground transients: 7,000 peak minimum.

B. Conformal coating:
1. Provide conformal coating material applied to electronic circuitry and printed circuit boards to act as a protection against moisture, dust, temperature extremes, and chemicals such as H_2S and chlorine.

2.8 MIXES (NOT USED)

2.9 FABRICATION (NOT USED)

2.10 FINISHES

A. Enclosure finish shall be manufacturer’s standard gray.

2.11 SOURCE QUALITY CONTROL (NOT USED)

PART 3 EXECUTION

3.1 EXAMINATION (NOT USED)

3.2 PREPARATION (NOT USED)

3.3 INSTALLATION

A. As specified in the Common Work Results for Electrical section.

B. Install the equipment in accordance with the accepted installation instructions and anchorage details to meet the seismic and wind load requirements at the Project site.

C. General:
1. Furnish all cables, conduit, lugs, bolts, expansion anchors, sealants, and other accessories needed to complete the installation of the VFD (free-standing or within motor control center).
2. Assemble and install the VFD in the locations and with the layouts indicated on the Drawings.
3. Perform work in accordance with manufacturer's instructions and shop drawings.
4. Furnish components and equipment as required to complete the installation.
5. Replace any hardware lost or damaged during the installation or handling to provide a complete installation.
6. Install free-standing enclosures on a raised concrete housekeeping pad:
   a. Provide structural leveling channels in accordance with the manufacturer's recommendations to provide proper alignment of the units.
   b. Weld and/or bolt the VFD frame to the leveling channels.
7. Provide openings in top or bottom of the VFD (free-standing or within motor control center) enclosure for conduit only, no additional openings will be allowed:
   a. Improperly cut holes will require that the entire panel be replaced:
      1) No hole closers or patches will be allowed.
8. Bundle circuits together and terminate in each unit:
   a. Tie with nylon wire ties.
   b. Label all wires at each end with wire numbers shown on the approved control drawings.
   c. All connections to and from the VFD (free-standing or within motor control center) enclosure must be made via terminal blocks.

3.4 ERECTION, INSTALLATION, APPLICATION, CONSTRUCTION (NOT USED)

3.5 REPAIR/RESTORATION (NOT USED)

3.6 RE-INSTALLATION (NOT USED)

3.7 COMMISSIONING

A. As specified in the Commissioning section.

B. Source testing (Factory Acceptance Tests):
1. Owner and Engineer will witness the Factory Acceptance Test as specified in the Common Work Results for Electrical section.
2. General:

a. Incoming inspection of components and raw materials based on strategic supplier base and experience.
b. All VFDs furnished under this Section shall be tested and inspected as specified below. Testing of VFDs based on sampling plans is not allowed.
c. The testing procedures specified are the minimum acceptable requirements. The manufacturer may perform additional tests at its discretion.

3. Failure of any component during testing requires repair of the faulted component and complete retest.
4. Tests:
   a. Perform manufacturer's standard factory acceptance tests.

C. Provide Manufacturer’s Certificate of Installation and Functionality Compliance as specified in the Commissioning section.

D. Owner training:
   1. As specified in the Common Work Results for Electrical section.

3.8 FIELD QUALITY CONTROL

A. As specified in the Common Work Results for Electrical section.

B. Provide the services of a VFD manufacturer representative for startup assistance and training:
   1. Inspection and field adjustment:
      a. Supervise the following and submit written certification that the equipment and controls have been properly installed, aligned, adjusted, and readied for operation.
   2. Startup field testing:
      a. Provide technical direction for testing, checkout, and startup of the VFD equipment in the field.
      b. Under no circumstances are any portions of the drive system to be energized without authorization from the manufacturer's representative.

3.9 ADJUSTING

A. Make all adjustments as necessary and recommended by the manufacturer, Engineer, or testing firm.

B. Provide the services of a VFD manufacturer factory technician to make all drive parameters and protective device settings:
   1. Protective device settings provided by the VFD manufacturer in accordance with the manufacturer of the driven equipment requirements.
   2. Provide documentation of VFD settings included but not limited to:
      a. Minimum speed.
      b. Maximum speed.
      c. Skip speeds.
      d. Current limit.
      e. Acceleration time.
      f. Deceleration time.

3.10 CLEANING

A. As specified in the Common Work Results for Electrical section.

3.11 PROTECTION

A. As specified in the Common Work Results for Electrical section.

3.12 SCHEDULES (NOT USED)

END OF SECTION

THIS PAGE INTENTIONALLY LEFT BLANK FOR DOUBLE SIDED PRINTING

SECTION 262650

REDUCED HARMONIC VARIABLE FREQUENCY DRIVES

PART 1 GENERAL

1.1 SUMMARY

A. Section includes:
1. Reduced harmonic 18 pulse or active front end, variable frequency drives (VFD), 60 to 500 horsepower for control of standard NEMA Design B squirrel cage induction motors.
2. **NOTE: SIZE ALL VFD'S AT 125% OF APPROVED MOTOR NAMEPLATE FLA**

1.2 REFERENCES

A. As specified in the Common Work Results for Electrical section.

B. National Electrical Manufacturers Association (NEMA).

C. Underwriters' Laboratories (UL):
1. 50 – Standards for Enclosures for Electrical Equipment.
2. 508A – Standard for Safety for Industrial Control Panels.

1.3 DEFINITIONS

A. As specified in the Common Work Results for Electrical section.

B. Specific Definitions
1. VFD: Variable Frequency Drive.
2. AFE: Active Front End.
3. IGBT: Insulated Gate Bipolar Transistor.

1.4 SYSTEM DESCRIPTION

A. Design requirements:
1. Each VFD system shall consist of all components required to meet the performance, protection, safety, testing and certification criteria of this Section.
2. The VFD system:
   a. Is a fully integrated package.
   b. Includes all material necessary to interconnect VFD system elements, even if shipped separately.
3. Any modifications to a standard product necessary to meet this Section shall be made only by the VFD manufacturer.
4. Each VFD shall be completely factory pre-wired, assembled and then tested as a complete package by the VFD manufacturer to ensure a properly coordinated, fully integrated drive system.
5. The VFD shall be capable of operating standard NEMA Design B motors. It is the responsibility of the VFD manufacturer to ensure that the drive will not damage motor insulation due to high carrier frequency, reflected wave, dv/dt or other drive electrical characteristics:
   a. The VFD manufacturer shall furnish equipment necessary to mitigate potential damage to motor insulation.
   b. Coordinate bearing protection methods with the supplier of the driven equipment.
   c. Motors as specified in the Low Voltage Motors section up to 500 Horsepower.

B. Performance:
1. Operating envelope:
a. Speed and torque requirements:
1) Provide a variable torque or constant torque VFD as required by the driven load.
2) The VFD shall be capable of producing a variable alternating voltage/frequency output to provide continuous operation over the 40 to 110 percent (25 to 66 hertz) speed range.
b. Current requirements:
1) Provide 100 percent of rated output current on a continuous basis.
2) Variable torque VFD :
a) Minimum 110 percent current overload for 1 minute.
3) Constant torque VFD :
a) Minimum 150 percent current overload for 1 minute.
2. Harmonics:
a. The VFD shall meet the following distortion limits at 2 percent line voltage unbalance measured at the input terminals of the VFD:
1) Voltage harmonics: The maxmimum allowable total harmonic distortion, THD, for each VFD shall not exceed 5 percent.
2) Current harmonics: The maximum allowable total harmonic current distortion limit, TDD, for each VFD shall not exceed 5 percent as measured at the input terminals of the VFD system.
3. Efficiency:
a. VFD system minimum efficiency shall be 93 percent at rated kilowatt output of the VFD. VFD system efficiency shall be calculated as follows:

$$Efficiency\ (\%) = \frac{Power\ (Load)}{Power\ (Supply)}\ x\ 100$$

b. Power:
1) Load power is the total 3-phase power measured at the output terminals of the drive system, including the output filter.
2) Supply power is the total power measured at the input terminals of the VFD including phase shifting transformer or active front end components and auxiliary equipment (e.g., controls, fans) for complete system operation.
4. Total power factor:
a. Minimum of 0.96 lagging across the entire speed range.
b. Under no operating conditions shall the VFD have a leading power factor.
5. Frequency accuracy:
a. Minimum of within 0.01 percent.
6. Speed regulation:
a. Minimum of within 0.5 percent across the entire speed range.
7. Capable of working with all available power sources (utility and on-site generation) and with all new and existing VFDs.

1.5 SUBMITTALS

A. Furnish submittals as specified in the Common Work Results for Electrical section:
1. Custom prepared by the VFD manufacturer and specific for the equipment furnished.

B. Product data:
1. Manufacturer of the VFD.
2. Manufacturer of all components of the VFD.
3. Dimensions:
a. Height.

b. Width.
c. Depth.

4. Weight.
5. Nameplate schedule.
6. Bill of material.
7. Ratings:
   a. Voltage.
   b. Phase.
   c. Input current.
   d. Output current.
   e. Interrupting rating.
   f. Momentary current rating.
8. Catalog cut sheets for major components.
9. Surge protection data.
10. Design data:
    a. Efficiency and power factor values.
    b. Certification that the drive is sized for the full nameplate motor horsepower and current (at rated RPM) of the driven load at the installed altitude.
    c. Certification that based upon VFD design, cable length to motor, and motor dielectric insulation level that the VFD will not damage motor insulation due to carrier frequency, reflected wave, dv/dt, or other VFD produced characteristics.
    d. Certification that all electronic circuits and printed circuit boards are conformably coated.
    e. Certification that the VFD will operate with all power sources (including alternate utilities and on-site generation when applicable).
11. List of recommended spare parts.
12. For equipment installed in structures designated as seismic design category C, D, E, or F submit the following as specified in the Common Work Results for Electrical section:
    a. Manufacturer’s statement of seismic qualification with substantiating test data.
    b. Manufacturer’s special seismic certification with substantiating test data.

C. Shop drawings:
1. Complete plan and elevation drawings showing:
   a. All dimensions.
   b. Panel, sub-panel and component layout indexed to the bill of material.
   c. Conduit connections.
   d. Required clearance around equipment.
2. Block diagram showing the basic control and protection systems identifying the protection, control, trip and alarm functions, the reference signals and commands and the auxiliary devices.
3. Complete schematic, wiring and interconnection diagrams showing connections to both internal and external devices:
   a. Wiring diagrams shall include terminal number and wire numbers.
4. Complete 1-line and 3-line diagrams including, but not limited to, circuit breakers, motor circuit protectors, contactors, instrument transformers, meters, relays, timers, control devices, and other equipment comprising the complete system:
   a. Device electrical ratings shall be clearly indicated on the Drawings.

D. Certifications:
1. Certification letter from the VFD manufacturer stating that the VFD(s) are capable of operating with all new and existing sources (utility sources and on-site generation).
2. Certification letter from the VFD manufacturer stating that the VFD(s) are capable of operating with all new and existing VFDs on site.

E. Installation instructions:

1. Detail the complete installation of the equipment including rigging, moving, and setting into place.
2. For equipment installed in structures designated as seismic design category A or B:
    a. Provide manufacturer's installation instructions and anchoring details for connecting equipment to supports and structures.
3. For equipment installed in structures designated as seismic design category C, D, E, or F:
    a. Provide project-specific installation instructions and anchoring details based on support conditions and requirements to resist seismic and wind loads as specified in the Common Work Results for Electrical section.
    b. Submit anchoring drawings with supporting calculations.
    c. Drawings and calculations shall be stamped by a professional engineer registered in the state where the Project is being constructed.

F. Test forms and reports:
1. Submit complete factory acceptance test procedures and all forms used during the test.
    a. For VFD units less than 250 horsepower, provide certified test results for the actual VFD being furnished or prototype units. For VFD units 250 horsepower and larger, provide certified test results for the actual VFD being furnished.
    b. Provide the following certified test reports:
        1) Efficiency at rated power output and output frequency of 60 hertz.
        2) Power factor at 0 percent, 25 percent, 50 percent, 75 percent, and 100 percent speed.
        3) Harmonics at the input terminals of the VFD at 100 percent speed and 100 percent load.
            a) Voltage distortion: Measure individual harmonics up to and including the 50th harmonic and total harmonic distortion.
            b) Current distortion: Measure individual harmonics up to and including the 50th harmonic and total demand distortion.
    c. Submit complete field acceptance test procedures and all forms used during the test:
        1) Certification that the actual measured harmonic distortion for both voltage and current is within the specification limits at the installed site.
        2) Certification that the actual measured peak voltage at the motor terminations is less than 90 percent of the motor insulation dielectric withstand level.

G. Record documents:
1. Certified record documents of all equipment with information listed above.

H. Manufacturer's field reports:
1. Certification letter from the VFD manufacturer that the VFD(s) has been inspected and installed in accordance with the manufacturer's requirements.
2. Report listing the setting of all VFD adjustable parameters and their values after start-up.
3. Certification letter from the VFD manufacturer stating that the VFD(s) are programmed to avoid system resonances when connected to high impedances sources like standby generator.

I. Operation and maintenance manuals:
1. Spare parts list with supplier names and part numbers.
2. Start-up and commissioning instructions and data.
3. Complete bill of material indexed to the drawings, identifying the catalog or part numbers, manufacturer, and quantities of components of the VFD system.
4. Operating manuals:

a. Submit operating instructions and a maintenance manual presenting full details for care and maintenance of each model of VFD provided under this Contract.

5. Operating instructions:
   a. The written descriptions shall detail the operational functions of all controls on the front panel including keypad functions and parameters.
6. Maintenance manual:
   a. Furnish maintenance manuals with instructions covering all details pertaining to care and maintenance of all equipment as well as identifying all parts.
   b. Manuals shall include but are not limited to the following:
      1) Adjustment and test instructions covering the steps involved in the initial test, adjustment and start-up procedures.
      2) Detailed control instructions that outline the purpose and operation of every control device used in normal operation.
      3) All schematic wiring and external diagrams:
         a) Furnish drawings in a fully legible reduced 11-inch by 17-inch format.

1.6 QUALITY ASSURANCE

A. As specified in the Common Work Results for Electrical section.

B. Qualifications:
1. Any third party certification, safety or protection requirements shall be applied to the VFD system as a whole. Certification or protection of system elements or individual components by themselves is not acceptable.
2. VFDs shall be UL 508C listed and labeled.
3. VFD systems (packaged VFD panels) shall be UL 508A listed and labeled.
4. VFDs shall be manufactured by the VFD manufacturer at its own facility, which shall have a quality assurance program that is certified in accordance with ISO 9001.

1.7 DELIVERY, STORAGE, AND HANDLING

A. As specified in the Common Work Results for Electrical section.

B. Ship VFDs to the job site on a dedicated air ride vehicle that will allow the Contractor to utilize on site off-loading equipment:
1. VFDs shall be delivered to the site pre-assembled and wired.
2. Ship each VFD with 2 tamperproof accelerometers that record the maximum shock and vibration experienced by the VFD during shipping and handling.

C. Furnish temporary equipment heaters within the VFD to prevent condensation from forming.

1.8 PROJECT OR SITE CONDITIONS

A. As specified in the Common Work Results for Electrical section.

1.9 SEQUENCING

A. Conduct factory acceptance test and submit certified test results for Engineer’s review.

B. Ship equipment to Project Site after successful completion of factory acceptance test.

C. Assemble equipment in the field.

D. Conduct field acceptance tests including harmonic testing and submit results for Engineer’s review.

1. All utility power sources and on-site generation shall be installed and operable for field test.

E. Submit manufacturer's certification that equipment has been properly installed and is fully functional for Engineer's review.

F. Conduct Owner's training sessions.

G. Commissioning and process start-up as specified in the Commissioning section.

1.10 SCHEDULING

A. As specified in the Common Work Results for Electrical section.

1.11 WARRANTY

A. As specified in the Common Work Results for Electrical section.

1.12 SYSTEM START-UP

A. As specified in the Common Work Results for Electrical section.

B. The VFD manufacturer shall be responsible for start-up of the VFDs in the presence of the equipment suppliers, Contractor, Engineer, and Owner.

1.13 OWNERS INSTRUCTIONS (NOT USED)

1.14 MAINTENANCE

A. As specified in the Common Work Results for Electrical section.

B. Maintenance service: Manufacturer shall describe the field service system available to support the proposed VFD system. As a minimum describe:
   1. Type of technical support available (e.g., system engineering and technician).
   2. Location of field service personnel.
   3. Field service daily rates in dollars per hour and dollars per day.
   4. Guaranteed response times to service requests.

C. Spare parts:
   1. The following spare parts shall be furnished:
      a. Any special dedicated tools for emergency service and troubleshooting.
      b. All hardware and software required for configuration, maintenance, troubleshooting and inquiry of all drive parameters.

PART 2 PRODUCTS

2.1 MANUFACTURERS

A. One of the following or equal:
   1. Eaton.
   2. Allen-Bradley.
   3. Schneider-Electric.
   4. ABB.

2.2 EXISTING PRODUCTS (NOT USED)

2.3 MATERIALS (NOT USED)

2.4 MANUFACTURED UNITS (NOT USED)

2.5 EQUIPMENT

A. General:
1. Sinusoidal pulse width modulated, (PWM), voltage source type drive shall consist of the following:
   a. Rectifier section.
   b. Direct current link with capacitors.
   c. Insulated gate bipolar transistor (IGBT), inverter section.
   d. Microprocessor based controls.
   e. Output filter.
2. Rectifier section:
   a. Provide VFDs with either an 18-pulse rectifier section or an active front end:
   b. 18-pulse rectifier:
      1) Integral phase shifting auto-transformer:
         a) Converts 3-phase utility power to 3 sets of 3 power circuits with each set phase shifted and powering its own 3-phase bridge rectifier.
      2) Minimum 18-pulse diode rectifier section consisting of 3 three-phase bridge rectifiers.
         a) Specifically designed as a system to share currents between the bridges to within 1 percent.
   c. Active front end rectifier:
      1) IGBT based converter module.
         a) Six IGBTs minimum.
      2) Inductor/capacitor/inductor, LCL, harmonic filter.
         a) Low pass filter.
         b) The filter shall be disconnected from the line when the VFD is off.

B. Ratings:
1. Voltage:
   a. Input voltage: 480 Volts plus or minus 10 percent, 3-phase, 3-wire, 60 hertz.
   b. Solidly grounded.
2. Short-circuit rating:
   a. 65 kA RMS symmetrical.

C. Operational features:
1. Protective features:
   a. Annunciated at the keypad and available via network connection.
   b. Include the following protective features:
      1) Motor overload protection.
      2) Instantaneous overcurrent.
      3) Instantaneous overvoltage.
      4) Undervoltage.
      5) Power unit overtemperature.
      6) Phase loss.
      7) VFD output short circuit.
      8) VFD output ground fault.
      9) Blown fuse with blown fuse indication.
      10) IGBT protection.
      11) Cooling fan failure.
      12) Component failure.
2. Control mode:

a. The VFD shall operate in a either a constant volts/hertz or sensorless vector mode. Selectable using the programming keypad.

3. Frequency control:
   a. Minimum of 3 selectable skip frequencies with adjustable bandwidths.
   b. Programmable minimum frequency.
   c. Programmable maximum frequency.
4. Acceleration/Deceleration:
   a. Separately adjustable acceleration and deceleration rates.
   b. Each rate shall be adjustable from 0.01 to 1,800 seconds.
5. Spinning load:
   a. Capable of determining the speed and direction of a spinning load, “catch” the load and accelerate or decelerate it without damage to the load.
6. Programmable loss of signal:
   a. Upon loss of reference speed signal the VFD shall be programmable to either stop, maintain current speed, or default to preselected speed.
7. Power interrupt ride through:
   a. Capable of continuous operation in the event of a power loss of 5 cycles or less.
8. Hardwired inputs and outputs:
   a. Manufacturer’s standard number the following:
      1) Analog inputs:
         a) Configurable as either 0 to 10 volts or 4 to 20 milliamperes.
      2) Analog outputs:
         a) Programmable 4 to 20 milliamperes isolated.
      3) Discrete inputs:
         a) Programmable.
      4) Discrete outputs:
         a) Programmable.
         b) Form C relay contacts.
      5) Potentiometer 3-wire input.
   b. Provide additional inputs and outputs as required to meet the control functions indicated on the Drawings.
9. Communications:
   a. Provide each VFD with a EtherNet i/P communications interface module.
   b. The use of gateways is not acceptable.
   c. Control and monitoring of the bypass starter shall be available over the communications network.
   d. All protocols shall be certified by the governing authority.
10. Real-time clock:
   a. Capable of providing time-stamped events.
   b. Set locally or via a remote controller.
   c. Programable for day, month, year, local time zones in hours, minutes and seconds.
11. Diagnostics:
   a. Minimum of 4 fault conditions in memory on a first in - first out basis.
   b. Time stamped.
   c. Operating frequency, drive status and power mode shall also be stored at the time of the fault.
   d. Fault memory shall be maintained in the event of a power outage.
   e. The fault memory shall be accessible via RS-232, RS-422 or RS-485.
12. Automatic restart:
   a. User selectable, automatic restart feature allowing the VFD to restart following a momentary power failure or other VFD fault:
      1) Programmable for up to 9 automatic restart attempts with an adjustable time delay between restart attempts.

2.6 COMPONENTS

A. Enclosure:
   1. NEMA Type 12.
   2. Provide cooling devices required to maintain the VFD within the manufacturer's specified temperature limits for the Project conditions:
      a. Provide cooling device alarm.

B. Power disconnect:
   1. Flange mounted thermal magnetic circuit breaker:
      a. Lockable in the OFF position.

C. Phase shifting transformer:
   1. Auto-transformer.
   2. Integral part of the VFD assembly and factory mounted and wired within the VFD enclosure.
   3. Embedded thermal protection.
   4. Rated for rectifier duty.
   5. Copper or aluminum windings with 180-degree Celsius insulation.

D. Keypad:
   1. Furnished with a keypad for programming and control.
   2. Password security to protect drive parameters.
   3. Mounted on the door of the VFD.
   4. Back-lit LCD with a minimum of 2 lines of a minimum of 16 characters each.
   5. Programming and display features language: English.
   6. Capable of displaying the following parameters:
      a. Speed (percent).
      b. Input current (amperes).
      c. Output current (amperes).
      d. Output frequency (hertz).
      e. Input voltage.
      f. Output voltage.
      g. Total 3-phase kilowatt.
      h. Kilowatt hour meter.
      i. Elapsed run time meter.
      j. Revolutions per minute.
      k. Direct current bus voltage.
   7. In addition to all keys required for programming, the keypad shall have the following:
      a. Automatic/Manual selector.
      b. Start pushbutton.
      c. Stop pushbutton.
      d. Jog pushbutton.
      e. Speed increment.
      f. Speed decrement.
      g. Forward/Reverse selector.
      h. RUN indicator.
      i. PROGRAM indicator.
      j. FAULT indicator.
      k. DRIVE READY indicator.
      l. Diagnostics.
   8. Provide the VFD with the hardwired controls indicated on the Drawings.

E. Control power transformer:
   1. Furnish a control power transformer mounted and wired inside the drive enclosure:
      a. Primary and secondary fusing.

2. Size the transformer to supply power to all VFD controls and options as well as any external devices indicated on the Drawings including the motor winding heater.

2.7 ACCESSORIES

A. Surge protection:
1. Metal oxide varistors:
a. Provide protection for the VFD against:
1) Line transients: 5,000 volt peak minimum.
2) Line to ground transients: 7,000 peak minimum.

B. Conformal coating:
1. Provide conformal coating material applied to electronic circuitry and printed circuit boards to act as protection against moisture, dust, temperature extremes, and chemicals such as H_2S and chlorine.

C. Air filters:
1. Mounted on the outside of the VFD enclosure:
a. Replaceable without requiring that the VFD be turned off or the door opened.
2. Located on the front or top of the VFD enclosure.
a. Side or rear mounted air filters are not acceptable.

2.8 MIXES (NOT USED)

2.9 FABRICATION (NOT USED)

2.10 FINISHES

A. Enclosure finish shall be manufacturer's standard gray.

2.11 SOURCE QUALITY CONTROL (NOT USED)

PART 3 EXECUTION

3.1 EXAMINATION (NOT USED)

3.2 PREPARATION (NOT USED)

3.3 INSTALLATION

A. As specified in the Common Work Results for Electrical section.

B. Install the equipment in accordance with the accepted installation instructions and anchorage details to meet the seismic and wind load requirements at the Project site.

C. General:
1. Furnish all cables, conduit, lugs, bolts, expansion anchors, sealants, and other accessories needed to complete installation of the VFD (free-standing or within motor control center).
2. Assemble and install the VFD in the locations and with the layouts indicated on the Drawings.
3. Perform Work in accordance with the manufacturer's instructions and shop drawings.
4. Furnish components, and equipment as required to complete the installation.
5. Replace any hardware lost or damaged during the installation or handling to provide a complete installation.

6. Install free-standing enclosures on a raised concrete housekeeping pad:
    a. Provide structural leveling channels in accordance with the manufacturer's recommendations to provide proper alignment of the units.
    b. Weld and/or bolt the VFD frame to the leveling channels.
7. Provide openings in top or bottom of the VFD (free-standing or within motor control center) enclosure for conduit only, no additional openings will be allowed:
    a. Improperly cut holes will require that the entire panel be replaced:
        1) No hole closers or patches will be allowed.
8. Bundle circuits together and terminate in each unit:
    a. Tie with nylon wire ties. As specified in the 600-Volt or Less Wires and Cables section.
    b. Label all wires at each end with wire numbers shown on the approved Control Drawings.
    c. All connections to and from the VFD (free-standing or within motor control center) enclosure must be made via terminal blocks.

3.4 ERECTION, INSTALLATION, APPLICATION, CONSTRUCTION (NOT USED)

3.5 REPAIR/RESTORATION (NOT USED)

3.6 RE-INSTALLATION (NOT USED)

3.7 COMMISSIONING

A. Factory testing:
1. Owner and Engineer will witness the factory acceptance test as specified in the Common Work Results for Electrical section.
2. General:
    a. All VFDs furnished under this Section shall be tested and inspected as specified below.
    b. The testing procedures specified are the minimum acceptable requirements. The manufacturer may perform additional tests at its discretion.
3. Failure of any component during testing requires replacement of the faulted component and a complete retest.
4. Testing sequence:
    a. Submit a detailed test procedure for the VFD factory test:
        1) A minimum of 8 weeks in advance of the proposed testing date.
        2) No tests shall be performed until the test procedure is reviewed and accepted by the Engineer.
5. Component tests:
    a. Preliminary inspection:
        1) Verify that all components are correct.
        2) Verify that all connections are properly torqued.
    b. Printed circuit boards:
        1) Test each printed circuit board per the manufacturer's standard testing procedure.
    c. Wiring:
        1) Control and power wiring continuity verified point-to-point.
        2) Hi-pot power and control wiring at manufacturer's recommended levels.
        3) Verify ground bond resistance.
    d. Load testing:
        1) No load testing in accordance with the manufacturer's standard factory test procedure.
        2) Full load testing:

a) Test each VFD and all control logic with a representative motor or dynamometer load to simulate field operation conditions at 25 percent, 50 percent, and 100 percent full load current.
b) Tests shall be conducted in a manner in which the inverter (IGBT) section supplies all the output power (kw) of the VFD system. Control strategies using a contactor or other means of bypassing the VFD when operating at the line frequency shall not be permitted.
c) Tests shall be conducted using a minimum output frequency of 60 hertz, and a minimum switching frequency of 2.5 kHz.

B. Owner training:
1. As specified in the Commissioning section and the Common Work Results for Electrical section.

3.8 FIELD QUALITY CONTROL

A. As specified in the Common Work Results for Electrical section.

B. Provide the services of a VFD manufacturer representative for start-up assistance and training:
1. Inspection and field adjustment:
a. Supervise the following and submit written certification that the equipment and controls have been properly installed, aligned, adjusted, and readied for operation.
2. Start-up field testing:
a. Provide technical direction for testing, checkout, and startup of the VFD equipment in the field.
b. Under no circumstances are any portions of the drive system to be energized without authorization from the manufacturer's representative.
c. Compliance with the following specified parameters shall be verified by the VFD manufacturer:
1) Motor terminal voltage:
a) Make field measurements at the motor connection box.
b) Make measurements of the full speed range of the VFD.
c) Make measurements with a recording type oscilloscope.
2) Harmonics:
a) Make field measurements at the input terminals of the VFD with and without the VFD in operation.
b) Make measurements with a recording type harmonic analyzer displaying individual and total harmonic currents and voltages:
(1) Record currents and voltages for a minimum of 10 minutes.
(2) Analyzers using snapshots are not acceptable.
d. All utility sources and on-site generation shall be operational for start-up field testing.

3.9 ADJUSTING

A. Make all adjustments as necessary and recommended by the manufacturer, Engineer, or testing firm.

B. Provide the services of a VFD manufacturer factory technician to make all drive parameter and protective device settings:
1. Protective device settings provided by the VFD manufacturer in accordance with the manufacturer of the driven equipment requirements.
2. Provide documentation of VFD settings included but not limited to:
a. Minimum speed.

b. Maximum speed.
c. Skip speeds.
d. Current limit.
e. Acceleration time.
f. Deceleration time.
g. Carrier frequency.

3.10 CLEANING

A. As specified in the Common Work Results for Electrical section.

3.11 PROTECTION

A. As specified in the Common Work Results for Electrical section.

3.12 SCHEDULES (NOT USED)

END OF SECTION

THIS PAGE INTENTIONALLY LEFT BLANK FOR DOUBLE SIDED PRINTING

SECTION 262720

DRY-TYPE TRANSFORMERS

PART 1 GENERAL

1.1 SUMMARY

A. Section includes:
   1. Enclosed dry-type transformers:
      a. Rated 1 to 1,000 kilovolt-amperes, single and 3-phase.
      b. Primary voltage 600 volts and below.

1.2 REFERENCES

A. As specified in the Common Work Results for Electrical section.

B. Institute of Electrical and Electronics Engineers (IEEE):
   1. 389 - IEEE Recommended Practice for Testing Electronics Transformers and Inductors.
   2. C57.12.01 - IEEE Standard General Requirements for Dry-Type Distribution and Power Transformers Including Those with Solid Cast and/or Resin Encapsulated Windings.
   3. C57.96 - IEEE Guide for Loading Dry-Type Distribution and Power Transformers.

C. National Electrical Manufacturers Association (NEMA):
   1. 250 - Enclosures for Electrical Equipment (1000 V Maximum).

D. Underwriters Laboratory (UL):
   1. 1561 - Standard for Dry-Type General Purpose and Power Transformers.

E. U.S. Department of Energy (DOE):
   1. 10 CFR Part 431 - Energy Efficiency Program for Certain Commercial and Industrial Equipment.

1.3 DEFINITIONS

A. As specified in the Common Work Results for Electrical section.

B. NEMA:
   1. Type 2 enclosure in accordance with NEMA 250.
   2. Type 3R enclosure in accordance with NEMA 250.

1.4 SYSTEM DESCRIPTIONS

A. Provide 3-phase or 1-phase, 60 hertz dry-type with voltage ratings, kilovolt-ampere capacities, and connections as indicated on the Drawings:
   1. Transformers shall provide full capacity at the Project elevation and environmental conditions as specified in the Common Work Results for Electrical section after all derating factors have been applied.
   2. Suitable for continuous operation at full rating with normal life expectancy in accordance with IEEE C57.96.

1.5 SUBMITTALS

A. Furnish submittals as specified in the Common Work Results for Electrical section.

B. Product data:
   1. Catalog cut sheets.
   2. Nameplate data.
   3. Dimensions:
      a. Height.
      b. Width.
      c. Depth.
   4. Inrush current.
   5. Insulation system and temperature constraints.
   6. Number and rating of taps.
   7. Sound levels.
   8. Connection diagrams:
      a. Primary.
      b. Secondary.
   9. BIL rating.
   10. Required clearances.
   11. Percent impedance.
   12. Efficiency.
   13. Certification of full capacity capability at the Project elevation and ambient conditions.
   14. For equipment installed in structures designated as seismic design category C, D, E, or F submit the following as specified in the Common Work Results for Electrical section:
      a. Manufacturer's statement of seismic qualification with substantiating test data.
      b. Manufacturer's special seismic certification with substantiating test data.

C. Installation instructions:
   1. Detail the complete installation of the equipment including rigging, moving, and setting into place.
   2. For equipment installed in structures designated as seismic design category A or B:
      a. Provide manufacturer's installation instructions and anchoring details for connecting equipment to supports and structures.
   3. For equipment installed in structures designated as seismic design category C, D, E, or F:
      a. Provide project-specific installation instructions and anchoring details based on support conditions and requirements to resist seismic and wind loads as specified in the Common Work Results for Electrical section.
      b. Submit anchoring drawings with supporting calculations.
      c. Drawings and calculations shall be stamped by a professional engineer registered in the state where the Project is being constructed.

1.6 QUALITY ASSURANCE

A. As specified in the Common Work Results for Electrical section.

1.7 DELIVERY, STORAGE, AND HANDLING

A. As specified in the Common Work Results for Electrical section.

1.8 PROJECT OR SITE CONDITIONS

A. As specified in the Common Work Results for Electrical section.

1.9 SEQUENCING (NOT USED)

1.10 SCHEDULING (NOT USED)

1.11 WARRANTY

A. As specified in the Common Work Results for Electrical section.

1.12 SYSTEM START-UP

A. As specified in the Common Work Results for Electrical section.

1.13 OWNER'S INSTRUCTIONS (NOT USED)

1.14 MAINTENANCE (NOT USED)

PART 2 PRODUCTS

2.1 MANUFACTURERS

A. One of the following or equal:
   1. General Electric.
   2. Jefferson.
   3. Schneider Electric.
   4. Eaton.
   5. ABB.

2.2 EXISTING PRODUCTS (NOT USED)

2.3 MATERIALS

A. Cores:
   1. Non-aging, grain-oriented silicon steel.
   2. Magnetic flux densities below the saturation point.

B. Windings:
   1. High-grade magnet wire.
   2. Impregnated assembly with non-hydroscopic, thermo-setting varnish:
      a. Cured to reduce hot-spots and seal out moisture.
   3. Material electrical grade:
      a. Copper.

2.4 MANUFACTURED UNITS (NOT USED)

2.5 EQUIPMENT

A. General:
   1. 10 kilovolts BIL for 600-volt class windings.
   2. Sound levels, in accordance with IEEE 389 test conditions, not to exceed:

Kilovolt-Amperes Range	Audible Sound Level (db)
1-9	40
10-50	45
51-150	50
151-300	55
301-500	60
501-700	62
701-1000	64

   3. Taps:
      a. 15 kilovolt-amperes and less:
         1) Two 5 percent full capacity primary taps below rated voltage.

b. 25 kilovolt-amperes and larger:
1) Four 2.5 percent full capacity primary taps below rated voltage.
2) Two 2.5 percent full capacity primary taps above rated voltage.
c. Operated by a tap changer handle or tap jumpers accessible through a panel.
4. Terminals:
a. UL listed for either copper or aluminum conductors.
b. Rated for 75 degrees Celsius.
5. Daily overload capacities, at rated voltage and without reduction in life, in accordance with IEEE C57.96.

B. Transformers less than 15 kilovolt-amperes:
1. Insulation class: 185 degrees Celsius.
2. Temperature rise: 115 degrees Celsius.

C. Energy efficient transformers 15 kilovolt-amperes and larger:
1. Insulation class: 220 degrees Celsius.
2. Temperature rise: 80115150 degrees Celsius, except as noted below:
a. 150-degree Celsius rise for dry-type transformers located in motor control centers.
3. Efficiency:
a. In accordance with DOE 10 CFR Part 431.

D. Enclosures:
1. Heavy gauge steel:
a. Outdoor: Moisture and water resistant with rodent screens over all openings and in a weather-protected enclosure, NEMA Type 3R.
b. Indoor: NEMA Type 2.
2. Louvers to limit coil temperature rise to the value stated above, and case temperature rise to 50 degrees Celsius.
3. Built-in vibration dampeners to isolate the core and coils from the enclosure:
a. Neoprene vibration pads and sleeves.

2.6 COMPONENTS (NOT USED)

2.7 ACCESSORIES

A. Nameplates:
1. Non-corrosive metal or UL listed non-metallic:
a. Stamped, engraved or printed with the following information:
1) Phases.
2) Frequency.
3) Kilovolt-ampere rating.
4) Voltage ratings.
5) Temperature rise.
6) Impedance.
7) Insulation class.
8) BIL rating.
9) Connection diagram.
10) Weight.
11) Manufacturer.
12) The identification “transformer”.
13) Classes of cooling.
14) Tap voltage(s).
15) Vector diagram.

2.8 MIXES (NOT USED)

2.9 FABRICATION (NOT USED)

2.10 FINISHES

A. Finish to consist of de-greasing, phosphate cleaning, and an electrodeposited manufacturer's standard gray enamel rust-inhibiting paint.

2.11 SOURCE QUALITY CONTROL (NOT USED)

PART 3 EXECUTION

3.1 EXAMINATION (NOT USED)

3.2 PREPARATION (NOT USED)

3.3 INSTALLATION

A. As specified in the Common Work Results for Electrical section.

B. Install the equipment in accordance with the accepted installation instructions and anchorage details to meet the seismic and wind load requirements at the Project site.

C. General:
1. Floor, wall, platform, motor control center, packaged power supply, or roof mounted, as indicated on the Drawings.
2. Install where not in direct contact with building structure.
3. Install on single layer vibration pad under the entire mounting surface.
    a. Manufacturers: The following or equal:
        1) Korfund.
4. Make any necessary connections to the enclosure with liquidtight flexible conduit having neoprene gaskets and insulated ground bushings.
5. Ground the enclosure:
    a. To an equipment ground conductor in the conduit.
    b. To the facility grounding electrode system.
6. Floor mounted transformers:
    a. Install transformers on a housekeeping pads.
    b. Install transformers with adequate space from walls or other enclosures for proper ventilation in accordance with the manufacturer's recommendations.

3.4 ERECTION, INSTALLATION, APPLICATIONS, CONSTRUCTION (NOT USED)

3.5 REPAIR/RESTORATION (NOT USED)

3.6 RE-INSTALLATION (NOT USED)

3.7 COMMISSIONING

A. As specified in the Commissioning section.

B. Factory tests:
1. Applied voltage test to each winding and from each winding to the core:
    a. 600-volt class winding 4.5 kilovolt.
2. Induced voltage test at 2 times normal voltage and 400 hertz for 1,080 cycles.
3. Voltage ratio and polarity.
4. Sound level, performed in a test room with ambient sound level not exceeding 24 db.
5. Perform all tests in accordance with UL 1561.

3.8 FIELD QUALITY CONTROL

A. As specified in the Common Work Results for Electrical section.

3.9 ADJUSTING

A. Set the transformer taps as required to obtain nominal output voltage on the secondary terminals.

3.10 CLEANING

A. As specified in the Common Work Results for Electrical section.

3.11 PROTECTION

A. As specified in the Common Work Results for Electrical section.

3.12 SCHEDULES (NOT USED)

END OF SECTION

SECTION 262850

SURGE PROTECTIVE DEVICES

PART 1 GENERAL

1.1 SUMMARY

A. Section includes:
1. High-energy surge protective devices.

1.2 REFERENCES

A. As specified in the Common Work Results for Electrical section.

B. Institute of Electrical and Electronics Engineers (IEEE):
1. C62.41.1 - Guide on the Surge Environment in Low-Voltage (1000 V and less) AC Power Circuits.
2. C62.41.2 - Recommended Practice on Characterization of Surges in Low-Voltage (1000 V and Less) AC Power Circuits.
3. C62.45 - Recommended Practice on Surge Testing for Equipment Connected to Low-Voltage (1000 V and Less) AC Power Circuits.
4. C62.62- Standard Test Specifications for Surge Protective Devices (SPDs) for Use on the Load Side of the Service Equipment in Low Voltage (1000 V and less) AC Power Circuits.

C. National Electrical Manufacturers Association (NEMA):
1. 250 - Enclosures for Electrical Equipment (1000 V Maximum).

D. Underwriters Laboratory:
1. 1449, 4th Edition, Standard for Surge Protective Devices.

1.3 DEFINITIONS

A. As specified in the Common Work Results for Electrical section.

B. NEMA:
1. Type 1 enclosure in accordance with NEMA 250.
2. Type 4 enclosure in accordance with NEMA 250.
3. Type 4X enclosure in accordance with NEMA 250.
4. Type 12 enclosure in accordance with NEMA 250.

C. Specific definitions:
1. SPD: Surge protective device.
2. SAD: Silicon avalanche diode.
3. MOV: Metal oxide varistor.
4. MCOV: Maximum continuous operating voltage.
5. I_n: Nominal discharge current.
6. VPR: Voltage protection rating.
7. SCCR: Short circuit current rating.

1.4 SUBMITTALS

A. Furnish submittals as specified in the Common Work Results for Electrical section.

B. Product data:
   1. Furnish complete product data confirming detailed compliance or exception statements to all provisions of this Section.
   2. Manufacturer's catalog cut sheets indicating:
      a. Manufacturer and model numbers.
      b. Ratings of each SPD including but not limited to:
         1) Short circuit current rating.
         2) Nominal discharge current.
         3) Maximum continuous operating voltage.
         4) Voltage protection rating.
         5) System voltage.
         6) System frequency.
         7) Surge current capacity.
   3. Submit independent test data from a nationally recognized testing laboratory verifying the following:
      a. Overcurrent protection.
      b. UL 1449.

C. Shop drawings:
   1. Provide electrical and mechanical drawings by the manufacturer that detail:
      a. Unit dimensions.
      b. Weights.
      c. Components.
      d. Field connection locations.
      e. Mounting provisions.
      f. Connection details.
      g. Wiring diagram.

D. Operation and maintenance manuals:
   1. Provide the manufacturer's manual with installation, start-up, spare parts lists, and operating instructions for the specified system.

1.5 QUALITY ASSURANCE

A. As specified in the Common Work Results for Electrical section.

B. Provide SPD units that are designed, manufactured, tested and installed in compliance with the following codes and standards:
   1. Institute of Electrical and Electronics Engineers (IEEE C62.41.1, C62.41.2, C62.45, C62.62).
   2. Federal Information Processing Standards Publication 94 (FIBS PUB 94).
   3. National Electrical Manufacturer Association.
   4. National Fire Protection Association (NFPA 20, 75 and 780).
   5. National Electric Code (NFPA 70).
   6. Underwriters Laboratories (UL 1449 4th Edition and UL 1283).
   7. International Electrotechnical Commission (IEC 801).

1.6 DELIVERY, STORAGE, AND HANDLING

A. As specified in the Common Work Results for Electrical section.

1.7 PROJECT OR SITE CONDITIONS

A. As specified in the Common Work Results for Electrical section.

1.8 SEQUENCING

A. Coordinate with and provide SPD equipment to the electrical equipment manufacturer before final assembly and factory testing.

1.9 SCHEDULING (NOT USED)

1.10 WARRANTY

A. As specified in the Common Work Results for Electrical section.

B. Extended warranty:
   1. Furnish a manufacturer’s full 5-year parts and labor warranty from date of shipment against any part failure when installed in compliance with manufacturer's written instructions, UL listing requirements, and any applicable national, state, or local electrical codes.
   2. Warranty shall include:
      a. Direct, factory trained employees must be available within 48 hours for assessment of the problem.
      b. A 24-hour toll-free 800-number for warranty support.

1.11 SYSTEM START-UP

A. As specified in the Common Work Results for Electrical section.

1.12 OWNER'S INSTRUCTIONS (NOT USED)

1.13 MAINTENANCE (NOT USED)

PART 2 PRODUCTS

2.1 MANUFACTURERS

A. One of the following or equal:
   1. Liebert.
   2. Eaton.
   3. Schneider Electric.
   4. General Electric.

2.2 SYSTEM DESCRIPTION

A. Surge protective devices as an integral component of the electrical equipment or externally mounted as indicated on the Drawings.

2.3 EXISTING PRODUCTS (NOT USED)

2.4 MATERIALS (NOT USED)

2.5 MANUFACTURED UNITS

A. Provide Type 1 or Type 2 SPD units as required for the locations indicated on the Drawings.

B. Electrical requirements:
   1. SPD ratings are to be consistent with the nominal system operating voltage, phase, and configuration as indicated on the Drawings.
   2. MCOV:

a. For the SPD and all components in the suppression path (including all MOVs, SADs, and selenium cells): Greater than 115 percent of the nominal system operating voltage.

3. Operating frequency:
   a. 47 to 63 hertz.
4. SCCR:
   a. 65 kAIC minimum, but not less than the equipment it is connected to as indicated on the Drawings.
   b. The SCCR shall be marked on the SPD in accordance with UL 1449 and the NEC.
5. Nominal discharge current I_n:
   a. 20 kA.
6. Maximum VPR:

Modes	240/120	208Y/120	480Y/277	480V
L-N, L-G, N-G	900	900	1,500	1,500
L-L	1,200	1,200	2000	2,000

7. Peak surge current:
   a. Service entrance locations:
      1) 240 kA per phase minimum.
      2) 120 kA per mode minimum.
   b. Branch locations:
      1) 120 kA per phase, minimum.
      2) 60 kA per mode minimum.

C. Protection modes:
1. Provide SPD protection modes as follows:
   a. Line to Neutral (L-N) where applicable.
   b. Line to Ground (L-G).
   c. Neutral to Ground (N-G), where applicable.

D. Environmental requirements:
1. Storage temperature:
   a. -40 degrees to 122 degrees Fahrenheit.
2. Operating temperature:
   a. 32 degrees to 140 Fahrenheit.
3. Relative humidity:
   a. 5 percent to 95 percent.
4. Audible noise:
   a. Less than 45 dBa at 5 feet (1.5 m).
5. Operating altitude:
   a. Zero to 12,000 feet above sea level.

E. Provide surge protective devices that are suitable for application in IEEE C62.41.1, C62.41.2 Category A, B and C3 environments, as tested to IEEE C62.45.

2.6 EQUIPMENT (NOT USED)

2.7 COMPONENTS

A. Enclosure:
1. Located in electrical equipment as indicated on the Drawings.
2. External mounting:
   a. NEMA Type 4X enclosure:
      1) No ventilation openings.

b. Hinged cover requiring a tool for internal access.
c. Internal drawing pocket.
d. All monitoring indications must be visible without opening the door.

B. Internal connections:
1. Provide low impedance copper plates for intra-unit connections:
a. Attach surge modules using bolted connections to the plates for low impedance connections.
2. Size all connections, conductors, and terminals for the specified surge current capacity.

C. Surge diversion modules:
1. MOV:
a. Where multiple MOVs are used in parallel, utilize computer matched MOVs to within 1 volt variance and tested for manufacturer's defects.

D. Overcurrent protection:
1. Individually fuse all components, including suppression, filtering, and monitoring components:
a. Rated to allow maximum specified nominal discharge current capacity.
b. Overcurrent protection that limits specified surge currents is not acceptable.

E. Connections:
1. Provide terminals to accommodate wire sizes up to #2 AWG.

2.8 ACCESSORIES

A. Unit status indicators:
1. Provide red and green solid-state indicators, with printed labels, on the front cover to redundantly indicate on-line unit status:
a. The absence of the green light and the presence of the red light indicate that surge protection is reduced and service is needed to restore full operation.
b. Indicates the status of protection on each mode or phase.

B. Dry contacts for remote monitoring:
1. Electrically isolated Form C dry contacts (1 A/125 VAC) for remote monitoring of system integrity, and indication of under voltage, phase and/or power loss.

C. Provide an audible alarm which activates under any fault condition.
1. Provide an alarm On/Off switch to silence the alarm.
2. A visible LED will confirm whether alarm is On or Disabled.
3. Locate both switches and the audible alarm on the unit’s front cover.

D. Provide an integral disconnect switch located in-line with the SPD enclosure:
1. External manual operator.
2. The switch shall disconnect all ungrounded circuit conductors from the SPD.
3. The integral disconnect switch shall be capable of withstanding, without failure, the maximum published surge current magnitude and short circuit current without failure or damage to the switch.

E. Interconnection cable:
1. Interconnect the SPD to the power system using a manufacturer furnished assembly of low impedance coaxial cables installed in flexible conduit.
2. Cable designed to transmit transients with minimal voltage drop.
3. UL listed.

2.9 MIXES (NOT USED)

2.10 FABRICATION (NOT USED)

2.11 FINISHES (NOT USED)

2.12 SOURCE QUALITY CONTROL

A. Permanently affix surge rating to the SPD.

B. Perform manufacturer’s standard factory test:
   1. Perform testing in accordance with UL 1449.

PART 3 EXECUTION

3.1 EXAMINATION (NOT USED)

3.2 PREPARATION (NOT USED)

3.3 INSTALLATION

A. As specified in the Common Work Results for Electrical section.

B. Follow the manufacturer's recommended installation practices and comply with all applicable codes.

C. Special techniques:
   1. Install the SPD with as short and straight conductors including ground conductor as practically possible:
      a. Twist the input conductors together to reduce input conductor inductance.
   2. Interconnect the SPD to the power system using a manufacturer supplied interconnection cable consisting of low impedance coaxial cables installed in a flexible conduit.
   3. Do not subject SPD to insulation resistance testing.

3.4 ERECTION, INSTALLATION, APPLICATION, CONSTRUCTION (NOT USED)

3.5 REPAIR/RESTORATION (NOT USED)

3.6 RE-INSTALLATION (NOT USED)

3.7 COMMISSIONING

A. As specified in the Commissioning section.

3.8 FIELD QUALITY CONTROL

A. As specified in the Field Electrical Acceptance Tests section.

3.9 ADJUSTING (NOT USED)

3.10 CLEANING (NOT USED)

3.11 PROTECTION

A. As specified in the Common Work Results for Electrical section.

3.12 SCHEDULES (NOT USED)

END OF SECTION

SECTION 262900

ELECTRICAL POWER MONITORING

PART 1 GENERAL

1.1 SUMMARY

A. Section includes:
   1. Power meters.

1.2 REFERENCES

A. As specified in the Common Work Results for Electrical section.

B. American National Standard Institute (ANSI):
   1. C12.20 - Electricity Meters - 0.2 and 0.5 Accuracy Classes.

C. Institute of Electrical and Electronics Engineers (IEEE):
   1. C57.13.6 - Standard for High Accuracy Instrument Transformers.

1.3 DEFINITIONS

A. As specified in the Common Work Results for Electrical section.

B. Specific definitions:
   1. FS - Full Scale.
   2. RDG - Of Reading.
   3. SSM - Solid State Multifunction Power Meter.
   4. THD - Total Harmonic Distortion.

1.4 SYSTEM DESCRIPTION (NOT USED)

1.5 SUBMITTALS

A. Furnish submittals as specified in the Common Work Results for Electrical section.

B. Product data:
   1. Power meter data including but not limited to:
      a. Power requirements.
      b. Communications protocols.
      c. Input/outputs.
      d. Dimensions.
      e. Measurement functions.
      f. Front panel controls.
      g. Display characteristics.

C. Operation and maintenance manuals:
   1. Descriptive and technical bulletins and sales aids edited to reflect only the equipment to be provided and covering each of the components in the system.
   2. A maintenance section including all instruction leaflets and technical data necessary to setup, change setup and maintain the power meters.
   3. Original licensed copies of all software and software manuals.

1.6 QUALITY ASSURANCE

A. As specified in the Common Work Results for Electrical section.

1.7 DELIVERY, STORAGE, AND HANDLING

A. As specified in the Common Work Results for Electrical section.

1.8 PROJECT OR SITE CONDITIONS

A. As specified in the Common Work Results for Electrical section.

1.9 SEQUENCING (NOT USED)

1.10 SCHEDULING (NOT USED)

1.11 WARRANTY

A. As specified in the Common Work Results for Electrical.

1.12 SYSTEM START-UP

A. As specified in the Common Work Results for Electrical section.

1.13 OWNER'S INSTRUCTIONS (NOT USED)

1.14 MAINTENANCE (NOT USED)

PART 2 PRODUCTS

2.1 MANUFACTURERS

A. One of the following or equal:
   1. Allen-Bradley.
   2. Eaton.
   3. General Electric.
   4. Schneider Electric.

2.2 EXISTING PRODUCTS (NOT USED)

2.3 MATERIALS (NOT USED)

2.4 MANUFACTURED UNITS (NOT USED)

2.5 EQUIPMENT (NOT USED)

2.6 COMPONENTS

A. Power meters:
   1. Power meter type 1 (SSM1) device which shall include at a minimum:
      a. Individual phase currents, plus or minus 0.5 percent FS.
      b. Phase-to-phase and phase-to-neutral voltages, plus or minus 0.5 percent FS.
      c. Watts, VARs, VA, plus or minus 1 percent FS.
      d. Watt-hours, VAR-hours, VA-hours, plus or minus 1 percent FS.

e. PF (apparent and displacement), plus or minus 2 percent FS.
f. Frequency, plus or minus 1 percent hertz.
g. Demand:
    1) Ampere, plus or minus 0.5 percent full scale.
    2) Watt, VAR, VA, plus or minus 1 percent full scale.
h. Minimum and maximum values:
    1) Volts (L-L), volts (L-N), current, watts, VARS, VA.
    2) Power factor:
        a) Apparent.
        b) Displacement.
        c) Frequency.
i. Synch-input kilowatts utility.
j. LCD with LED backlight.

2.7 ACCESSORIES

A. Current transformers:
1. Ring type current transformers:
    a. Suitable for service within low or medium voltage equipment as indicated on the Drawings.
    b. Designed to have a mechanical and thermal rating to withstand short-circuit current, stresses, and heating effects equal to the rating of the equipment of the application.
2. Current ratio: As indicated on the Drawings, for use as a guideline:
3. Rated in accordance with IEEE C57.13.6 with accuracy of the current transformers suitable for relay accuracy class and rated for 200 percent burden for the required connected devices.
4. Identify polarity with standard marking or symbols.
5. Capable of carrying rated primary current continuously without damage.
6. Install secondary wiring from current transformers in a suitable wiring trough, or conduit to proper short-circuiting type terminal blocks for connection to relays, instruments, and other devices.

B. Potential transformers:
1. Indoor dry type, single-phase, 60 hertz, with a minimum thermal capacity of not less than 400 volt-amperes at 55 Celsius rise above 40 Celsius ambient.
2. Accuracy classification determined in accordance with IEEE C57.13.6, suitable for relay accuracy class, and 200 percent burden, for the required connected devices, with the secondary voltage 120 volts.
3. Insulation levels as required for the equipment system voltage but not less than:
    a. 600 VAC, 10 kV BIL for 480 VAC systems.
    b. 5.6 KV, 60 kV BIL for 2300 and 4160 VAC systems.
    c. 15.5 KV, 110 kV BIL for 12.47 kV and 13.2 kV systems.
4. Identify polarity with standard markings or symbols.
5. Connect transformer secondary to potential buses as required.
6. Protect medium voltage potential transformers on the primary side with medium voltage current-limiting fuses.
7. Protect low voltage potential transformers on the primary side and secondary side with current-limiting fuses.
8. Mount medium voltage potential transformers in a separate compartment on a drawout device which, when in the FULLY WITHDRAWN position, disconnects both primary and secondary terminals of the transformer and grounds the primary potential fuses.

2.8 MIXES (NOT USED)

2.9 FABRICATION (NOT USED)

2.10 FINISHES (NOT USED)

2.11 SOURCE QUALITY CONTROL (NOT USED)

PART 3 EXECUTION

3.1 EXAMINATION (NOT USED)

3.2 PREPARATION (NOT USED)

3.3 INSTALLATION

A. As specified in the Common Work Results for Electrical section.

B. Install power meters in the electrical equipment as indicated on the Drawings.

3.4 ERECTION, INSTALLATION, APPLICATION, CONSTRUCTION (NOT USED)

3.5 REPAIR/RESTORATION (NOT USED)

3.6 RE-INSTALLATION (NOT USED)

3.7 COMMISSIONING

A. As specified in the Commissioning section.

3.8 FIELD QUALITY CONTROL

A. As specified in the Common Work Results for Electrical section.

3.9 ADJUSTING (NOT USED)

3.10 CLEANING

A. As specified in the Common Work Results for Electrical section.

3.11 PROTECTION

A. As specified in the Common Work Results for Electrical section.

3.12 SCHEDULES (NOT USED)

END OF SECTION

SECTION 263050

ELECTRICAL SYSTEM STUDIES

PART 1 GENERAL

1.1 SUMMARY

A. Section includes:
1. Short-circuit fault analysis study.
2. Protective device coordination study.
3. Arc-flash hazard study.

1.2 REFERENCES

A. As specified in the Common Work Results for Electrical section.

B. Institute of Electrical and Electronics Engineers (IEEE):
1. 1584 - IEEE Guide for Specification of Scope and Deliverable Requirements for an Arc-Flash Hazard Calculations Study in Accordance with IEEE Std 1584(TM).

C. National Fire Protection Association (NFPA).

1.3 DEFINITIONS

A. As specified in the Common Work Results for Electrical section.

1.4 SYSTEM DESCRIPTION

A. General study requirements:
1. Scope:
a. The short-circuit fault analysis, protective device coordination, and arc-flash hazard studies shall include all new and existing equipment in the power distribution system including, but not limited to:
1) Utility equipment.
2) Switchgear.
3) Switchboards.
4) Generators.
5) Transformers:
a) Including all dry-type transformers.
6) Motor control centers.
7) Freestanding variable frequency drives and starters.
8) Disconnect switches.
9) Motors.
10) Panelboards:
a) Including all 240- and 208-volt systems.
11) Vendor control panels.
12) HVAC equipment.
b. Study scenarios:
1) The studies shall include all possible electrical system configurations, for example:
a) Operation on normal (utility) source.
b) Operation on generator source.

c) Main-breakers closed, tie-breaker open.
d) Either main-breaker open, tie-breaker closed.

2. Obtain, for all equipment, the required data for preparation of the study including, but not limited to:
   a. Transformer kilovolt-ampere (kVA) and impedances.
   b. Generator impedances.
   c. Generator decrement curves.
   d. Bus withstand ratings.
   e. Cable and bus data.
   f. Protective device taps, time dials, instantaneous pickups, and time-delay settings.
3. Obtain the Electric Utility information on the minimum and maximum available fault current, minimum and maximum utility impedances, utility protective device settings including manufacturer and model number, interrupting ratings, X/R ratios, and model information one level above the point of connection:
   a. Utility tolerances and voltage variations.
4. The individual performing the studies shall visit the site and collect all necessary field data in order to perform and complete comprehensive electrical system studies.
5. Obtain equipment layouts and configurations from the manufacturer's final submittal requirements and project layout drawings as required.
6. Bus and conductor data:
   a. Use impedances of the actual installed or specified conductors, unless otherwise indicated.
   b. Use cable and bus impedances calculated at 25 degrees Celsius, unless otherwise indicated.
   c. Use 600-volt cable reactance based on typical dimensions of actual installed or specified conductors, unless otherwise indicated.
   d. Use bus withstand values for all equipment having buses.
   e. Use medium-voltage cable reactances based on typical dimensions of shielded cables with 133-percent insulation levels, unless otherwise indicated.
7. Motors:
   a. Each motor shall be individually modeled:
      1) Grouping of motors for fault contribution current is not acceptable.
   b. Motors with variable frequency drives may be assumed to have no contribution to fault current.
8. Use the equipment, bus, and device designations as indicated on the Drawings for all studies.

B. Short-circuit fault analysis study additional requirements:
   1. The short-circuit fault analysis shall be performed and submitted in 2 phases:
      a. Initial short-circuit fault analysis:
         1) Based on the Contract Documents and Electric Utility information.
         2) The initial short-circuit fault analysis study shall indicate the estimated available short-circuit current at the line side terminals of each piece of equipment covered by the scope of the study.
         3) Provide a list of assumptions used in the initial study.
      b. Final short-circuit fault analysis:
         1) The final short-circuit fault analysis shall modify the initial analysis as follows:
            a) Utilize the actual equipment provided on the project.
            b) Utilize conductor lengths based on installation.
   2. Calculate 3-phase bolted fault, line-to-line fault, line-to-ground fault, double line-to-ground fault, short-circuit 1/2 cycle momentary symmetrical and asymmetrical RMS, 1-1/2 to 4 cycle interrupting symmetrical RMS, and 30-cycle steady-state short-circuit current values at each piece of equipment in the distribution system.

3. Evaluate bus bracing, short-circuit ratings, fuse interrupting capacity and circuit-breaker-adjusted interrupting capacities against the fault currents, and calculate X/R values:
    a. Identify and document all devices and equipment as either inadequate or acceptable.
4. Calculate line-to-ground and double line-to-ground momentary short-circuit values at all buses having ground-fault devices.
5. Provide calculation methods, assumptions, one-line diagrams, and source impedance data, including utility X/R ratios, typical values, recommendations, and areas of concern.

C. Protective device coordination study additional requirements:
1. Furnish protective device settings for all functions indicated on the Drawings including, but not limited to:
    a. Current.
    b. Voltage:
        1) Provide settings for all voltage relays based upon actual utility and generator tolerances and specifications.
    c. Frequency:
        1) Provide settings for all frequency relays based upon actual utility and generator tolerances and specifications.
    d. Negative sequence.
    e. Reverse power.
    f. Machine protection functions:
        1) Provide settings for all motor and generator protective relays based on the manufacturer's recommended protection requirements.
2. Provide log-log form time-current curves (TCCs) graphically indicating the coordination proposed for the system:
    a. Include with each TCC a complete title and one-line diagram with legend identifying the specific portion of the system covered by the particular TCC:
        1) Typical TCCs for identical portions of the system, such as motor circuits, are acceptable as allowed by the Engineer.
    b. Include a detailed description of each protective device identifying its type, function, manufacturer, and time-current characteristics:
        1) These details can be included on the TCC.
    c. Include a detailed description of each protective device tap, time dial, pickup, instantaneous, and time delay settings:
        1) These details can be included on the TCC.
3. TCCs shall include all equipment in the power distribution system where required to demonstrate coordination. Include utility relay and fuse characteristics, medium-voltage equipment protective relay and fuse characteristics, low-voltage equipment circuit breaker trip device characteristics, transformer characteristics, motor and generator characteristics, and characteristics of other system load protective devices:
    a. Include all devices down to the largest branch circuit and largest feeder circuit breaker in each motor control center, main breaker in branch panelboards, and fused disconnect switches.
    b. Provide ground fault TCCs with all adjustable settings for ground fault protective devices.
    c. Include manufacturing tolerances and damage bands in plotted fuse and circuit breaker characteristics.
    d. On the TCCs, show transformer full load currents, transformer magnetizing inrush, ANSI transformer withstand parameters, and transformer damage curves.
    e. Cable damage curves.
    f. Terminate device characteristic curves at a point reflecting the maximum symmetrical or asymmetrical fault current to which the device is exposed based on the short-circuit fault analysis study.

g. Coordinate time interval medium-voltage relay characteristics with upstream and downstream devices to avoid nuisance tripping.

4. Site generation: When site generation (including cogeneration, standby, and emergency generators) is part of the electrical system, include phase and ground coordination of the generator protective devices:
   a. Show the generator decrement curve and damage curve along with the operating characteristic of the protective devices.
5. Suggest modifications or additions to equipment rating or settings in a tabulated form.

D. Arc-flash hazard study additional requirements:
1. Include the calculated arc-flash boundary and incident energy (calories/square centimeter) at each piece of equipment in the distribution system:
   a. Perform study with 15 percent arcing fault variation as defined by IEEE 1584.
   b. Perform arc-flash calculations at minimum and maximum utility fault contributions.
   c. Perform arc-flash calculations for both the line side and load side of the switchgear, switchboard, motor control center, and panelboard main breakers.
   d. Perform arc-flash calculations for all short-circuit scenarios with all motors on for 3 to 5 cycles and with all motors off.
   e. Protective device clearing time shall be limited to 2 seconds, maximum.
2. Provide executive summary of the study results:
   a. Provide summary based upon worst case results.
3. Provide a detailed written discussion and explanation of the tabulated outputs:
   a. Include all scenarios.
4. Provide alternative device settings to allow the Owner to select the desired functionality of the system:
   a. Minimize the arc-flash energy by selective trip and time settings for equipment maintenance purposes.
   b. Identify the arc-flash energy based upon the criteria of maintaining coordination and selectivity of the protective devices.

E. By virtue of the fact that this is a professional study, the Owner reserves the right to modify the requirements of the study to comply with its operational requirements. The protective device coordination study and the arc-flash hazard study shall be modified based on the results of the meetings with the Owner.

1.5 SUBMITTALS

A. Furnish submittals as specified in the Common Work Results for Electrical section.

B. Initial studies and reports:
1. Include the following in the initial short-circuit current report:
   a. List of all devices included in the studies.
   b. A description of all operating scenarios.
   c. Form and format of arc-flash labels.

C. Final studies and reports:
1. Format and quantity:
   a. Provide 6 bound copies of all final reports.
   b. Provide 3 complete sets of electronic files on CD or DVD media, including the electrical system model(s), configuration files, custom libraries, and any other files used to perform the studies and produce the reports. Also provide an electronic version of the bound reports in PDF format.
2. Include the sections below in the final report:
   a. Copies of correspondence and data obtained from the electric utility company.
   b. Letter certifying the inspection and verification of existing equipment.
   c. One-line diagrams:

1) The following information shall be included at a minimum:
    a) Motor horsepower.
    b) Transformer data:
        (1) kVA.
        (2) Configuration.
    c) Cable data:
        (1) Insulation.
        (2) Size.
        (3) Length.
2) One-line diagrams shall be fully legible at 11-inch by 17-inch size.

d. Include in the short-circuit fault analysis study:
1) Descriptions, purpose, basis, assumptions, recommendations, and scope of the study.
2) Normal system connections and those that result in maximum fault conditions.
3) Tabulation of circuit breaker, fuse, and other protective device ratings compared to maximum calculated short-circuit duties.
4) Fault current calculations for the cases run including a definition of terms and guide for interpretation of computer software printouts.

e. Protective device coordination study shall include:
1) Descriptions, purpose, basis, assumptions, recommendations, and scope of the study.
2) List all requirements used in the selection and setting criteria for any protective devices.
3) TCCs graphically indicating the coordination proposed for the system on log-log graphs.
4) Tabulation of relay, fuse, circuit breaker, and other protective devices in graphical form with a one-line diagram to display area coordination.
5) Where coordination could not be achieved, an explanation shall be included in the report to support the statement along with recommendations to improve coordination. Recommended equipment modifications or settings shall be in a tabulated form.

f. Include in the arc-flash hazard study:
1) Descriptions, purpose, basis, assumptions, recommendations, and scope of the study.
2) Normal system connections and those that result in maximum arc-flash conditions.
3) Arc-flash raw data, calculations, and assumptions.
4) Arc-flash label data:
    a) Identifying the content of each label.
    b) Identifying the location of each label.

D. Certification:
1. Submit written certification, sealed and signed by the professional engineer conducting the study, equipment supplier, and electrical subcontractor stating that the data used in the study is correct.

E. Submit the credentials of the individual(s) performing the study and the individual in responsible charge of the study.

1.6 QUALITY ASSURANCE

A. As specified in the Common Work Results for Electrical section.

B. Qualifications of the entity responsible for electrical system studies:

1. The studies shall be performed, stamped, and signed by a professional engineer registered in the state where the project is located.
2. A minimum of 5 years of experience in power system analysis is required for the individual in responsible charge of the studies.
3. The short-circuit fault analysis, protective device coordination, and arc-flash hazard studies shall be performed with the aid of a digital computer program:
    a. Point-to-point calculations are not acceptable.

1.7 DELIVERY, STORAGE, AND HANDLING (NOT USED)

1.8 PROJECT/SITE CONDITIONS (NOT USED)

1.9 SEQUENCING

A. Site visit to gather data on the existing facility systems for all studies:
    1. Make multiple trips as required to obtain all data for the short-circuit fault analysis, protection device coordination, and arc flash hazard studies.

B. Submit the initial short-circuit fault analysis study before submittal of any electrical equipment.

C. Initial electrical system study meeting.

D. Submit the preliminary short-circuit fault analysis, protective device coordination, and arc-flash hazard studies.

E. Second electrical system study meeting for preliminary results.

F. Final arc-flash meeting and final short-circuit fault analysis, protective device coordination, and arc-flash hazard studies.

G. Label equipment with approved arc-flash labels.

H. Owner’s training.

1.10 SCHEDULING (NOT USED)

1.11 WARRANTY (NOT USED)

1.12 SYSTEM START-UP (NOT USED)

1.13 OWNER’S INSTRUCTIONS (NOT USED)

1.14 MAINTENANCE (NOT USED)

PART 2 PRODUCTS

2.1 MANUFACTURERS

A. Electrical system study software: One of the following or equal:
    1. Operation Technology, Inc., ETAP.
    2. SKM Systems Analysis, Powertools.
    3. Power Analytics Corp., Paladin DesignBase.

2.2 EXISTING PRODUCTS (NOT USED)

2.3 MATERIALS (NOT USED)

2.4 MANUFACTURED UNITS (NOT USED)

2.5 EQUIPMENT (NOT USED)

2.6 COMPONENTS

A. Arc-flash hazard labels:
   1. Dimensions:
      a. Minimum 5 inches by 3.5 inches.
   2. Materials:
      a. Polyester with polyvinyl polymer over-laminate.
      b. Self-adhesive.
      c. Resistant to:
         1) UV.
         2) Chemicals and common cleaning solvents.
         3) Scuffing.
         4) Wide temperature changes.
   3. Contents:
      a. Short-circuit bus identification.
      b. Calculated incident energy (calories/square centimeter) range:
         1) Based on worst-case study results.
      c. Arc-flash protection boundary.
      d. Shock hazard boundary:
         1) The Contractor may provide separate labels for indication of the shock hazard boundary.
   4. Color scheme:
      a. For locations above 40 calories/square centimeter:
         1) White label with red “DANGER” strip across the top.
         2) Black lettering.
      b. For locations below 40 calories/square centimeter:
         1) White label with orange “WARNING” strip across the top.
         2) Black lettering.

2.7 ACCESSORIES (NOT USED)

2.8 MIXES (NOT USED)

2.9 FABRICATION (NOT USED)

2.10 FINISHES (NOT USED)

2.11 SOURCE QUALITY CONTROL (NOT USED)

PART 3 EXECUTION

3.1 EXAMINATION (NOT USED)

3.2 PREPARATION (NOT USED)

3.3 INSTALLATION

A. As specified in the Common Work Results for Electrical section.

B. Install all arc-flash hazard labels:
   1. Install labels at all locations required by NFPA, ANSI, or IEEE standards.
   2. At a minimum, install labels in the following locations:
      a. The front of each main or incoming service compartment.
      b. The front of each low-voltage switchgear section.
      c. The front of each medium-voltage circuit breaker door.
      d. The front of each accessible auxiliary or conductor compartment.
      e. Each accessible rear or side vertical section.
      f. Each motor control center vertical section.
      g. Each panelboard covered by the study.
      h. Each control panel, individual starter or VFD, or other equipment covered by the scope of the study.
   3. Install labels prior to equipment energization.

C. Adjust protective device settings per final study prior to equipment energization.
   1. Devices that require power for configuration may be set during energization, but before any subfed loads are energized.
   2. Ensure that settings for upstream equipment are set prior to energizing downstream devices.

3.4 ERECTION, INSTALLATION, APPLICATION, AND CONSTRUCTION (NOT USED)

3.5 REPAIR/RESTORATION (NOT USED)

3.6 RE-INSTALLATION (NOT USED)

3.7 COMMISSIONING

3.8 FIELD QUALITY CONTROL

A. As specified in the Common Work Results for Electrical section.

B. The individual performing the arc-flash hazard study shall direct the installation of the arc-flash hazard labels:
   1. Remove and replace any improperly applied labels.
   2. Repair the equipment finish damaged by removal of any label.
   3. Install labels level or plumb across the entire dimension of the label.

3.9 ADJUSTING (NOT USED)

3.10 CLEANING (NOT USED)

3.11 PROTECTION (NOT USED)

3.12 SCHEDULES (NOT USED)

END OF SECTION

SECTION 263213.5

ENGINE GENERATOR

PART 1 GENERAL

1.1 Summary

A This section includes the following items from a single supplier:
1. Engine Generator Set.
2. Enclosure
3. Related Accessories as specified

B Related Requirements
1. It is the intent of this specification to secure an engine-driven generator set that has been prototype tested, factory built, production-tested, and site-tested together with all accessories necessary for a complete installation as shown on the plans and drawings and specified herein.
2. Any exceptions to the published specifications shall be subject to the approval of the engineer and submitted minimum 10 days prior to the closing of the bid with a line by line summary description of all the items of compliance, any items that have been are omitted or have been taken exception to, and a complete description of all deviations.
3. It is the intent of this specification to secure a generator set system that has been tested during design verification, in production, and at the final job site. The generator set will be a commercial design and will be complete with all of the necessary accessories for complete installation as shown on the plans, drawings, and specifications herein. The equipment supplied shall meet the requirements of the National Electrical Code and applicable local codes and regulations.
4. All equipment shall be new and of current production by an international, power system manufacturer of generators, transfer switches, and paralleling switchgear. The manufacturer shall be a supplier of a complete and coordinated system. There will be single-source responsibility for warranty, parts, and service through a factory-authorized representative with factory-trained technicians.

1.2 Submittals

A Action Submittals
1. Product Data
   a The submittal shall include prototype test certification and specification sheets showing all standard and optional accessories to be supplied; schematic wiring diagrams, dimension drawings, and interconnection diagrams identifying by terminal number each required interconnection between the generator set, the transfer switch, and the remote annunciator panel if it is included elsewhere in these specifications.

B Informational Submittal
1. Certificates
   a The generator set shall be listed to UL 2200 or submitted to an independent third-party certification process to verify compliance as installed.

C Closeout Submittal
1. Maintenance Contracts
2. Operation and Maintenance Data
3. Warranty Documentation
4. Record Documentation

1.3 Quality Assurance

A Regulatory Agency
1. The generator set shall conform to the requirements of the following codes and standards:

   a CSA C22.2, No. 14-M91 Industrial Control Equipment.
   b EN50082-2, Electromagnetic Compatibility-Generic Immunity Requirements, Part 2: Industrial.

c EN55011, Limits and Methods of Measurement of Radio Interference Characteristics of Industrial, Scientific and Medical Equipment.
d IEC8528 part 4, Control Systems for Generator Sets.
e IEC Std 61000-2 and 61000-3 for susceptibility, 61000-6 radiated and conducted electromagnetic emissions.
f IEEE446 Recommended Practice for Emergency and Standby Power Systems for Commercial and Industrial Applications.
g NFPA 70, National Electrical Code, Equipment shall be suitable for use in systems in compliance to Article 700, 701, and 702.
h NFPA 99, Essential Electrical Systems for Health Care Facilities.
i NFPA 110, Emergency and Standby Power Systems. The generator set shall meet all requirements for Level 1 systems. Level 1 prototype tests required by this standard shall have been performed on a complete and functional unit. Component level type tests will not substitute for this requirement.

2. Qualifications
a The equipment shall be produced by a manufacturer who is ISO 9001 certified for the design, development, production and service of its complete product line.
b The power system shall be produced by a manufacturer who has produced this type of equipment for a period of at least 10 years and who maintains a service organization available twenty-four hours a day throughout the year.

3. Manufacturers
a The power system shall be furnished by a single manufacturer who shall be responsible for the design, coordination, and testing of the complete system. The entire system shall be installed as shown on the plans, drawings, and specifications herein.
b The basis of design is a Kohler model 600REOZVB. If the supplier wishes to propose equivalent equipment, all additional costs associated with re-engineering and mechanical & electrical modifications to the installation will be at the contractor's expense. The contractor must also supply the details below with his proposal:
- A line-by-line clarification of the specification marked with "D" for deviation; "E" for exception, and "C" for comply
- The weight & outline dimensions of the proposed equipment.

Upon request, the manufacturer shall provide a notarized letter certifying compliance with all of the requirements of this specification. The certification shall identify, by serial number(s), the equipment involved. No exceptions to the specifications shall be allowed or included in the certification.

1.4 Warranty

A Manufacturer's Warranty

1. The generator set shall include a standard warranty covering one (1) year or 2000 hours, whichever occurs first, to guarantee against defective material and workmanship in accordance with the manufacturer's published warranty from the date of initial startup.
2. The generator set manufacturer and its distributor shall maintain a 24-hour parts and service organization. This organization shall regularly engage in maintenance contract programs to perform preventive maintenance and service on equipment similar to that specified. A service agreement shall be available and shall include system operation under simulated operating conditions; adjustment to the generator set, transfer switch, and switchgear controls as required, and certification in the owner's maintenance log of repairs made and functional tests performed on all systems.

PART 2 PRODUCTS

2.1 Equipment

A Equipment
1. The generator set shall be a Kohler model 600REOZVB with a 5M4030 alternator (or Cummins/CAT equal). It shall provide 750 kVA and 600 kW when operating at 277/480 volts, 60

Hz, 0.80 power factor. The generator set shall be capable of a 130°C Standby rating while operating in an ambient condition of less than or equal to 77 °F and a maximum elevation of 500 ft above sea level. The standby rating shall be available for the duration of the outage.

B Engine
1. The minimum 16.12 liter displacement engine shall deliver a minimum of 903 HP at a governed engine speed of 1800 rpm, and shall be equipped with the following:
   a. Electronic isochronous governor capable of 0.25% steady-state frequency regulation
   b. 24-volt positive-engagement solenoid shift-starting motors
   c. 80-ampere automatic battery charging alternator with a solid-state voltage regulation
   d. Positive displacement, full-pressure lubrication oil pump, cartridge oil filters, dipstick, and oil drain
   e. Dry-type replaceable air cleaner elements for normal applications
   f. Engine-driven or electric fuel-transfer pump including fuel filter and electric solenoid fuel shutoff valve capable of lifting fuel
   g. The turbocharged engine shall be fueled by diesel
   h. The engine shall have a minimum of 6 cylinders and be liquid-cooled
2. The engine shall be EPA certified from the factory
3. The generator must accept rated load in one-step.

C Cooling System
1. The engine shall be liquid-cooled by a closed loop, unit mounted radiator rated to operate the generator set at full load at an ambient temperature of 50 degrees C (122 degrees F). The radiator fan and other rotating engine parts shall be guarded against accidental contact.

D Standard Air Cleaner
1. The air cleaner shall provide engine air filtration which meets the engine manufacturer's specifications under typical operating conditions.

E Battery
1. Each genset requires a quantity of two BCI group 8D batteries which must meet the engine manufactures' specifications for the ambient conditions specified in Part 1 Project Conditions and shall comply with the NFPA requirements for engine cranking cycles. Each battery shall be rated according to SAE Standards J-537 with a minimum cold cranking amp of 950 amps and a minimum reserve capacity of 430 Minutes at 80F. The battery must contain two handles to aid in lifting and the case must be constructed of polypropylene to resist breakage and extend service life. Removable cell covers shall be provided to allow for checking of electrolyte specific gravity.
2. Battery rack and battery cables capable of holding the manufacturer's recommended batteries shall be supplied.

F Housing
1. Level 2 Sound Attenuated Enclosure
   a The generator set shall be supplied with a Level 2 Sound Attenuated Enclosure, providing a sound level of 76 dB(A) while the generator is operating at 100% load at 7 meters (23 feet) using acoustic insulation and acoustic-lined inlet hoods, and using acoustic insulation and acoustic-lined inlet hoods, constructed from a minimum of 0.125 inch thick formed heavy duty aluminum panels. The acoustic insulation used shall meet UL 94 HF1 flammability classification. The enclosure shall be manufactured from bolted panels to facilitate service, future modifications, or field replacement. The enclosure shall use external vertical air inlet and outlet hoods with 90 degree angles to discharge air up and reduce noise. The enclosure shall have an integral rodent guard and skid end caps and shall have bracing to meet 241 kph (150 mph) wind loading.
   b The enclosure components and skid shall be cleaned with a two-stage alkaline cleaning process to remove grease, grit, and grime from parts. Components shall then be subjected to a Zirconium-based conversion coating process to prepare the metal for electrocoat (e-coat) adhesion. All enclosure parts shall receive an 100% epoxy primer electrocoat (e-coat) with high-edge protection. Following the e-coat process, the parts shall be finish coated with powder baked paint for superior finish, durability, and appearance with a Power ArmorTM industrial finish that provides heavy duty durability in harsh conditions, and is fade-, scratch- and corrosion-resistant.
   c The enclosure must surpass a 3,000 hour salt spray corrosion test per ASTM B-1117.
   d Enclosures will be finished in the manufacturer's standard color.

e The enclosures shall allow the generator set to operate at full load in an ambient temperature of 50°C with no additional derating of the electrical output of the generator set.
f Enclosures shall be equipped with sufficient side and end doors to allow access for operation, inspection, and service of the unit and all options. Minimum requirements are two doors per side. When the generator set controller faces the rear of the generator set, an additional rear facing door is required. Access to the controller and main line circuit breaker shall meet the requirements of the National Electric Code.
g Doors shall be fitted with hinges, hardware, and the doors shall be removable.
h Doors shall be equipped with lockable latches. Locks shall be keyed alike. Door locks shall be recessed to minimize potential of damage to door/enclosure.
i A duct between the radiator and air outlet shall be provided to prevent re-circulation of hot air.
j The complete exhaust system shall be internal to the enclosure.
k The critical silencer shall be fitted with a tailpipe and rain cap.

G Fuel oil storage
1. Double Wall Secondary Containment Sub-base Fuel Tank
a The generator set shall be supplied with a sub-base fuel tank of sufficient capacity to hold a minimum of 25 hours of fuel at 100% loading. No less than 1033 gallons of diesel fuel.
b The sub-base fuel system shall be listed under UL 142, subsection entitled Special Purpose Tanks EFVT category, and will bear their mark of UL Approval according to their particular classification.
c The above ground steel secondary containment rectangular tank for use as a sub base for diesel generators is manufactured and intended to be installed in accordance with the Flammable and Combustible Liquids Code—NFPA 30, the Standard for Installation and Use of Stationary Combustible Engine and Gas Turbines—NFPA 37, and Emergency and Standby Power Systems—NFPA 110.
d The primary tank shall be rectangular in shape and constructed in clam shell fashion to ensure maximum structural integrity and allow the use of a full throat fillet weld.
e Steel Channel Support System. Reinforced steel box channel for generator support, with a load rating of 5,000 lbs. per generator mounting hole location. Full height gussets at either end of channel and at generator mounting holes shall be utilized.
f Exterior Finish. The sub-base tank exterior finish shall be Power Armor PlusTM, a polyurea-textured rubberized coating.
g Normal venting shall be sized in accordance with the American Petroleum Institute Standard No 2000, Venting Atmospheric and Low Pressure Storage Tanks not less than 1-1/4" (3 cm.) nominal inside diameter.
h The emergency vent opening shall be sized to accommodate the total capacity of both normal and emergency venting and shall be not less than that derived from NFPA 30, table 2-8, and based on the wetted surface area of the tank. The wetted area of the tank shall be calculated on the basis of 100 percent of the primary tank. The vent is to be spring-pressure operated: opening pressure is 0.5/psig and full opening pressure is 2.5 psig. The emergency relief vent is to be sized to accommodate the total venting capacity of both normal and emergency vents.
i There shall be a 2" NPT opening within the primary tank and lockable manual fill cap.
j A direct reading, UL listed, magnetic fuel level gauge with a hermetically sealed, vacuum tested dial, to eliminate fogging, shall be provided.
k A float switch for remote or local annunciation of a (50% standard) low fuel level condition shall be supplied.

H Controller
1. APM402 Generator Set Controller

a. The generator set controller shall be a microprocessor based control system that will provide automatic starting, system monitoring, and protection. The controller system shall also provide local monitoring and remote monitoring. The control system shall be capable of PC based updating of all necessary parameters, firmware, and software.
b. The controller shall be mounted on the generator set and shall have integral vibration isolation. The controller shall be prototype and reliability tested to ensure operation in the conditions encountered.

2. Codes and Standards

    a. The generator set controller shall meet NFPA 110 Level 1 requirements and shall include an integral alarm horn as required by NFPA.
    b. The controller shall meet NFPA 99 and NEC requirements.
    c. The controller shall be UL 508 listed.

3. Applicability

    a. The controller shall be a standard offering in the manufacturer's controller product line.
    b. The controller shall support 12-volt and 24volt starting systems.
    c. The controller's environmental specification shall be: -40°C to 70°C operating temperature range and 5-95% humidity, non-condensing.
    d. The controller shall mount on the generator or remotely within 40 feet with viewable access.

4. Controller Buttons, Display and Components

    a. The generator set controller shall include the following features and functions:
        1. Push button Master Control buttons. The buttons shall be tactile-feel membrane with an indicator light to initiate the following functions:
            a. Run Mode: When in the run mode the generator set shall start as directed by the operator.
            b. Off/Reset Mode: When in the Off/Reset mode the generator set shall stop, the reset shall reset all faults, allowing for the restarting of the generator set after a shutdown.
            c. Auto Mode: When in Auto the mode the generator set shall be ready to accept a signal from a remote device.
        2. Emergency Stop Switch. The remote stop switch shall be red in color with a "mushroom" type head. Depressing the stop button will immediately stop the generator set and lockout the generator set for any automatic remote starting.
        3. Push Button/Rotary Selector dial. This dial shall be used for selection of all Menus and sub-menus. Rotating the dial moves you through the menus, pushing the dial selects the menu and function/features in that menu. Pushing the button selects the feature/function and sub-menus.
        4. Digital Display. The digital display shall be alphanumeric, with 2 lines of data and approximately 24 charters. The display shall have back lighting for ease of operator use in high and low light conditions. The display shall display status of all faults and warnings. The display shall also display any engine faults. While the generator set is running, the display shall scroll all-important information across the screen for ease of operator use. The scroll can be stopped by pushing the rotary dial. The display shall fall asleep when the generator set is not running and will wake-up when the generator set starts or the rotary dial is depressed.
        5. Fault Light. The controller shall have an annunciator fault light that glows red for faults and yellow for warnings. These faults and warnings shall be displayed in the digital display. The fault light will also glow yellow when not in AUTO.
        6. Alarm Horn. The controller shall provide an alarm horn that sounds when any faults or warnings are present. The horn shall also sound when the controller is not in the AUTO mode.
        7. Alarm Silence/Lamp Test Button. When this button is depressed, it shall test all controller lamps. This button will also silence the alarm horn when the unit is not AUTO.
        8. USB Connection. The controller shall have a USB connection on the face of the controller. This connection shall allow for updating of all software and firmware. This port shall also allow for all servicing of generator set parameters, fault diagnostics and viewing of all controller information via use a laptop computer.
        9. Dedicated user inputs. The controller shall have dedicated inputs for remote emergency stop switch, remote 2-wire star for transfer switch and auxiliary

shutdown.

10. The controller shall have auto resettable circuit protection integral on the circuit board.

5. System Controller Monitoring and Status Features and Functions

a. The generator controller shall display and monitor the following engine and alternator functions and allow adjustments of certain parameters at the controller:
    1. Overview menu
        a. Active shutdowns and warnings shall be displayed if present and without the need of operator interface
        b. Engine runtime with total hours
        c. Average line to line voltage
        d. Coolant temperature
        e. Fuel level or pressure
        f. Oil pressure
        g. Battery voltage
        h. Software version
        i. Frequency
        j. Average current
    2. Engine metering menu.
        a. Engine speed
        b. Oil pressure
        c. Coolant temperature
        d. Battery voltage
    3. Generator metering menu.
        a. Total power in VA
        b. Total power in W
        c. Rated power % used
        d. Voltage L-L and L-N for all phases
        e. Current L1, L2, L3
        f. Frequency
    4. Generator set information.
        a. Generator set model number
        b. Generator set serial number
        c. Controller set number
    5. Generator set run time.
        a. Engine run time total hours
        b. Engine loaded total hours
        c. Number of engine starts
        d. Total energy in kW
    6. Generator set system
        a. System voltage
        b. System frequency 50/60Hz
        c. System phase, single/three phase
        d. Power rating kW
        e. Amperage rating
        f. Power type standby/prime
        g. Measurement units, metric/English units adjustable
        h. Alarm silence, always or auto only
    7. Generator set calibration, the following are adjustable at the controller.
        a. Voltage L-L and L-N all phases
        b. Current L1, L2, L3
        c. Reset all calibrations
    8. Voltage regulation, +/-0.5% regulation, the following is adjustable at the controller.
        a. Voltage Adjustable +/- 10%
    9. Digital and Analog Inputs and outputs
        a. Displays settings and status
    10. Event Log

a. Stores event history, up to 1000 events

6. Controller Engine control features and functions

   a. Automatic restart - the controller has automatic restart feature that initiates the start routine and re-crank after a failed start attempt.
   b. Cyclic cranking - the controller shall have programmable cyclic cranking
   c. Engine starting aid - the controller shall have the capability of providing control for an optional engine starting aid.
   d. The control system shall include time delays for engine start and cool down.
   e. The control system shall interface with the engine ECM and display engine fault codes and warnings. The ECM shall also include sender failure monitoring to help distinguish between failed senders and actual failure conditions.
   f. The controller shall monitor and display engine governor functions with include steady state and transient frequency monitoring

7. Controller Alternator control features and functions

   a. Integrated hybrid voltage regulator. The system shall have integral microprocessor based voltage regulator system that provides +/- 5% voltage regulation, no-load to full load with three phase sensing. The system is prototype tested and control variation of voltage to frequency. The voltage regulator shall be adjustable at the controller with maximum +/- 10% adjustable of nominal voltage.
   b. AC output voltage regulator adjustment. The system shall allow for adjustment of the integral voltage regulator with maximum of +/- 10% adjustment of the system voltage.
   c. Alternator thermal overload protection. The system shall have integral alternator overload and short circuit protection matched to each alternator for the particular voltage and phase configuration.
   d. Power metering. The controller digitally displays power metering of kW and kVA.

8. Other control features and functions

   a. Event logging. The controller keeps a record of up to 1000 events, for warning and shutdown faults. This fault information becomes a stored record of systems events and can be reset.
   b. Historical data logging. The controller total number of generator set successful start shall be recorded and displayed.
   c. Programmable access. The control system shall include a USB port that gives service technicians the ability to provide software and firmware upgrades. The system shall also be capable of allowing setting of all critical parameters using the service software and a laptop computer. All parameters and setting should be capable to being stored on a laptop for future upgrades of printing for analysis.

9. Generator Set Warning, Shutdown Alarm and Status

   a. The generator set shall have alarms and status indication lamps that show non-automatic status and warning and shutdown conditions. The controller shall indicate with a warning lamp and or alarm and on the digital display screen any shutdown, warning or engine fault condition that exists in the generator set system. The following alarms and shutdowns shall exist as a minimum:
      1. Engine functions
         a. Critical high fuel level (alarm)
         b. ECM communication loss (shutdown)
         c. ECM diagnostics (alarm & shutdown)
         d. Engine overspeed (shutdown)
         e. Engine start aid active
         f. Engine under speed (shutdown)
         g. Fuel tank leak (alarm & shutdown)
         h. High DC battery voltage (alarm)

i. High coolant temperature (alarm & shutdown)
j. High fuel level (alarm)
k. Low DC battery voltage (alarm)
l. Low coolant level (shutdown)
m. Low coolant temperature (alarm)
n. Low cranking voltage (alarm)
o. Low engine oil level (alarm & shutdown)
p. Low fuel level (alarm & shutdown)
q. Low fuel pressure (alarm)
r. Low oil pressure (alarm & shutdown)
s. No coolant temperature signal (shutdown)
t. No oil pressure signal (shutdown)
u. Overcrank (shutdown)
v. Speed sensor fault (alarm)

2. Generator functions
   a. AC sensing loss over & under current (alarm & shutdown)
   b. Alternator protection (shutdown)
   c. Ground fault input (alarm)
   d. kW overload (shutdown)
   e. Locked rotor (shutdown)
   f. Over-frequency (shutdown)
   g. Over AC voltage (shutdown)
   h. Under-frequency (shutdown)
   i. Under AC voltage (shutdown)
   j. Emergency stop (shutdown)
3. Other General functions
   a. Battery charger fault (alarm)
   b. Common fault (shutdown)
   c. Common warning (alarm)
   d. Master switch not in auto (alarm)
   e. Generator running
   f. Input/Output fault (alarm)
4. The generator set controller shall also be capable of meeting all necessary NFPA 110 level 1 requirements that include several of the above along with; EPS supplying load, Master switch “not in auto”, and contacts for local and remote common alarm.

10. Communications

a. The controller shall communicate with the ECM for control, monitoring, diagnosis, and meet SAE J1939 standards
b. Kohler proprietary RBUS communication shall be available.
c. A RBUS shall be able to monitor and alter parameters, and start or stop a generator.
d. The controller shall have the capability to communicate to a personal computer (IBM or compatible) and appropriate application software
e. A variety of connections shall be available based on requirements:
   1. A single control connection to a PC via USB
   2. Internet connection via Ethernet
f. Generator and transfer switch controls shall be equipped with communications modules capable of connecting to the same communication network.

I Generator Overcurrent and Fault Protection

1. The generator shall be provided with a factory installed, 100% rated line circuit breaker rated at 1000 amperes that is UL489 listed. Line circuit breakers shall be sized for the rated ampacity of the loads served by the breaker per the NEC.
2. The circuit breaker(s) shall incorporate an electronic trip unit
3. Load side lugs shall be provided from the factory.

J Alternator

1. The alternator shall be salient-pole, brushless, 2/3-pitch, with 4 bus bar provision for external connections, self-ventilated, with drip-proof construction and amortisseur rotor windings, and skewed for smooth voltage waveform. The ratings shall meet the NEMA standard (MG1-32.40) temperature rise limits. The insulation shall be class H per UL1446 and the varnish shall be a vacuum pressure impregnated, fungus resistant epoxy. Temperature rise of the rotor and stator shall be limited to 130°C Standby. The PMG based excitation system shall be of brushless construction controlled by a digital, three phase sensing, solid- state, voltage regulator. The AVR shall be capable of proper operation under severe nonlinear loads and provide individual adjustments for voltage range, stability and volts-per-hertz operations. The AVR shall be protected from the environment by conformal coating. The waveform harmonic distortion shall not exceed 5% total RMS measured line-to-line at full rated load. The TIF factor shall not exceed 50.
2. The alternator shall have a maintenance-free bearing, designed for 40000 hour B10 life. The alternator shall be directly connected to the flywheel housing with a semi-flexible coupling between the rotor and the flywheel.
3. The generator shall be inherently capable of sustaining at least 300% of rated current for at least 10 seconds under a 3-phase symmetrical short circuit without the addition of separate current-support devices.
4. Motor starting performance and voltage dip determinations shall be based on the complete generator set. The generator set shall be capable of supplying 2200 LRKVA for starting motor loads with a maximum instantaneous voltage dip of 35%, as measured by a digital RMS transient recorder in accordance with IEEE Standard 115. Motor starting performance and voltage dip determination that does not account for all components affecting total voltage dip, i.e., engine, alternator, voltage regulator, and governor will not be acceptable. As such, the generator set shall be prototype tested to optimize and determine performance as a generator set system.

K Vibration Isolation
1. Vibration isolators shall be provided between the engine-alternator and heavy-duty steel base.

2.2 Accessories

A. The generator set shall be supplied with a 10-ampere automatic float/equalize battery charger capable of charging both lead-acid and ni-cad type batteries, with the following features:
   i. Automatic 3-stage float to equalization charge
   ii. Voltage regulation of 1% from no to full load over 10% AC input line voltage variations
   iii. Battery charging current Ammeter and battery voltage voltmeter with 5% full-scale accuracy
   iv. LED lamp for power ON indication
   v. Current limited during engine cranking, short circuit, and reverse polarity conditions
   vi. Temperature compensated for ambient temperatures for -40°C to 60°C
   vii. Alarm circuit board featuring alarm contacts for low battery voltage, high battery voltage, and battery charger malfunction.
   viii. UL 1012 Listed
   ix. CSA Certified
B. Battery rack and battery cables capable of holding the manufacturer's recommended batteries shall be supplied.
C. The air cleaner restriction indicator shall indicate the need for maintenance of the air cleaners.
D. The exhaust piping shall be gas proof, seamless, stainless steel, flexible exhaust bellows and includes the flex exhaust tube and the mounting hardware.
E. Block Heater - The block heater shall be thermostatically controlled, 4,000 watt, 208 VAC, to maintain manufacturers recommended engine coolant temperature to meet the start-up requirements of NFPA 99 and NFPA 110, Level 1.
F. Supply flexible fuel lines to provide a flexible connection between the engine fuel fittings and the fuel supply tank piping and for the fuel return lines from the injector pump per engine manufacturer’s recommendations. Flex line shall have a protective steel wire braid to protect the hose from abrasion.
G. Input/Output Module Board -- Generator controller shall be provided with board providing two analog or digital inputs and 5 digital outputs.

2.3 Source Quality Control

A. Non-Conforming Work

1. To ensure that the equipment has been designed and built to the highest reliability and quality standards, the manufacturer and/or local representative shall be responsible for three separate tests: design prototype tests, final production tests, and site tests.

a. **Design Prototype Tests.** Components of the emergency system, such as the engine/generator set, transfer switch, and accessories, shall not be subjected to prototype tests because the tests are potentially damaging. Rather, similar design prototypes and preproduction models shall be subject to the following tests:
   i. Maximum power (kW)
   ii. Maximum motor starting (kVA) at 35% instantaneous voltage dip.
   iii. Alternator temperature rise by embedded thermocouple and/or by resistance method per NEMA MG1-32.6.
   iv. Governor speed regulation under steady-state and transient conditions.
   v. Voltage regulation and generator transient response.
   vi. Harmonic analysis, voltage waveform deviation, and telephone influence factor.
   vii. Three-phase short circuit tests.
   viii. Alternator cooling air flow.
   ix. Torsional analysis to verify that the generator set is free of harmful torsional stresses.
   x. Endurance testing.

b. **Final Production Tests.** Each generator set shall be tested under varying loads with guards and exhaust system in place. Tests shall include:
   i. Single-step load pickup
   ii. Safety shutdown device testing
   iii. Rated Power @ 0.8 PF
   iv. Maximum power
   v. Upon request, a witness test, or a certified test record sent prior to shipment.

c. **Site Tests.** The manufacturer's distribution representative shall perform an installation check, startup, and building load test. The engineer, regular operators, and the maintenance staff shall be notified of the time and date of the site test. The tests shall include:
   i. Fuel, lubricating oil, and antifreeze shall be checked for conformity to the manufacturer's recommendations, under the environmental conditions present and expected.
   ii. Accessories that normally function while the set is standing by shall be checked prior to cranking the engine. These shall include: block heaters, battery chargers, alternator strip heaters, remote annunciators, etc.
   iii. Generator set startup under test mode to check for exhaust leaks, path of exhaust gases outside the building, cooling air flow, movement during starting and stopping, vibration during operation, normal and emergency line-to-line voltage and frequency, and phase rotation.
   iv. Automatic start by means of a simulated power outage to test remote-automatic starting, transfer of the load, and automatic shutdown. Prior to this test, all transfer switch timers shall be adjusted for proper system coordination. Engine coolant temperature, oil pressure, and battery charge level along with generator set voltage, amperes, and frequency shall be monitored throughout the test.
   v. Load bank testing. The test shall consist of four hours of continuous operation using a portable resistive load bank. Adjust the load bank load to provide one half hour each at zero load, 25 percent, 50 percent, and 75 percent of full load. Followed by two hours of operation at rated standby load. Furnish the portable load bank, all connecting cables, metering equipment, and other equipment or devices required to perform the on-site testing. During the test, readings shall be taken every 15 minutes showing % load, voltage, amps, oil pressure, water temperature, and battery charge.

END OF SECTION

SECTION 263213.6

AUTOMATIC TRANSFER SWITCH

PART 1 GENERAL

1.1 Summary

A This section includes the following items from a single supplier:
1. Automatic transfer switch

B Related Requirements
1. It is the intent of this specification to secure an automatic transfer switch that has been prototype tested, factory built, production-tested, and site-tested together with all accessories necessary for a complete installation as shown on the plans and drawings and specified herein.
2. Any exceptions to the published specifications shall be subject to the approval of the engineer and submitted minimum 10 days prior to the closing of the bid with a line by line summary description of all the items of compliance, any items that have been are omitted or have been taken exception to, and a complete description of all deviations.
3. It is the intent of this specification to secure an automatic transfer switch that has been tested during design verification, in production, and at the final job site. The automatic transfer switch will be a commercial design and will be complete with all of the necessary accessories for complete installation as shown on the plans, drawings, and specifications herein. The equipment supplied shall meet the requirements of the National Electrical Code and applicable local codes and regulations.
4. All equipment shall be new and of current production by an international, power system manufacturer of generators, transfer switches, and paralleling switchgear. The manufacturer shall be a supplier of a complete and coordinated system. There will be single-source responsibility for warranty, parts, and service through a factory-authorized representative with factory-trained technicians.

1.2 Submittals

A Action Submittals
1. Product Data
   a The submittal shall include specification sheets showing all standard and optional accessories to be supplied; schematic wiring diagrams, dimension drawings, and interconnection diagrams identifying by terminal number each required interconnection between the generator set, the transfer switch, and the remote annunciator panel if it is included elsewhere in these specifications.
2. Shop Drawings

B Closeout Submittals
1. Operation And Maintenance Data
2. Warranty Documentation

1.3 Quality Assurance

A Regulatory Agency
1. The automatic transfer switch shall conform to the requirements of the following codes and standards:
   a UL 1008 - Standard for Transfer Switch Equipment
   b IEC 947-6-1 Low-voltage Switchgear and Control gear; Multifunction equipment; Automatic Transfer Switching EquipmentEN55011, Limits and Methods of Measurement of Radio Interference Characteristics of Industrial, Scientific and Medical Equipment.
   c NFPA 70 - National Electrical Code
   d NFPA 99 - Essential Electrical Systems for Health Care Facilities

e NFPA 110 - Emergency and Standby Power Systems
f IEEE Standard 446 - IEEE Recommended Practice for Emergency and Standby Power Systems for Commercial and Industrial Applications
g NEMA Standard ICS 10-2005, Electromechanical AC Transfer Switch Equipment.
h EN61000-4-4 Fast Transient Immunity Severity Level 4
i EN61000-4-5 Surge Immunity Class 4 (voltage sensing and programmable inputs only)
j IEEE 472 (ANSI C37.90A) Ring Wave Test
k IEC Specifications for EMI/EMC Immunity (CISPR 11, IEC 1000-4-2, IEC 1000-4-3, IEC 1000-4-4, IEC 1000-4-5, IEC 1000-4-6, IEC 1000-4-8, IEC 1000-4-11)
l CSA C22.2 No. 178 certification

2. Qualifications
   a The automatic transfer switch shall be produced by a manufacturer who is ISO 9001 certified for the design, development, production and service of its complete product line.
   b A manufacturer who has produced this type of equipment for a period of at least 10 years and who maintains a service organization available twenty-four hours a day throughout the year shall produce the automatic transfer switch.

3. Manufacturers
   a The automatic transfer switch shall be furnished by a single manufacturer who shall be responsible for the design, coordination, and testing of the complete system. The entire system shall be installed as shown on the plans, drawings, and specifications herein.
   b The manufacturer shall maintain a national service organization of employing personnel located throughout the contiguous United States. The Service center's personnel must be factory trained and must be on call 24 hours a day, 365 days a year.
   c The manufacturer shall maintain records of each switch, by serial number, for a minimum of 20 years.

1.4 Field or Site Conditions

A Ambient Conditions
1. Automatic transfer switch shall operate in the following conditions without any damage to the unit or its loads.
   a Ambient Temperature: -4 to 158 Degrees F
   b Relative Humidity: 5% to 95% noncondensing

1.5 Warranty or Bond

A Manufacturer's Warranty
1. The ATS shall include a standard warranty covering one (1) year to guarantee against defective material and workmanship in accordance with the manufacturer's published warranty from the date of initial startup.
2. The ATS manufacturer and its distributor shall maintain a 24-hour parts and service organization. This organization shall regularly engage in maintenance contract programs to perform preventive maintenance and service on equipment similar to that specified. A service agreement shall be available and shall include system operation under simulated operating conditions; adjustment to the generator set, transfer switch, and switchgear controls as required, and certification in the owner's maintenance log of repairs made and functional tests performed on all systems.

PART 2 PRODUCTS

2.1 Equipment

A Equipment
1. Furnish and install an automatic transfer switches system(s) with 3-Pole / 4-Wire, Solid Neutral, 2000 Amps, 480V/60Hz. The transfer switch shall have a withstand current rating of 65kAIC. Each automatic transfer shall consist of an inherently double throw power transfer switch

mechanism and a microprocessor controller to provide automatic operation. ATS shall be able to completely disconnect power from the site with the single push of a single button or a single throw of a single switch. All transfer switches and controllers shall be the products of the same manufacturer.

B Manufacturer

1. The basis of design is a Kohler model KEP-DMTC-2000S-TQ. If the supplier wishes to propose equivalent equipment as manufactured by Russelectric, all additional costs associated with re-engineering and mechanical & electrical modifications to the installation will be at the contractor's expense. The contractor must also supply the details below with his proposal:
    - A line-by-line clarification of the specification marked with "D" for deviation; "E" for exception, and "C" for comply.
    - The weight & outline dimensions of the proposed equipment.
2. Upon request, the manufacturer shall provide a notarized letter certifying compliance with all of the requirements of this specification. No exceptions to the specifications shall be allowed or included in the certification.

C Construction

1. The transfer switch shall be electrically operated and mechanically held with double throw construction, and operated by a momentarily energized solenoid-driven mechanism.
2. All transfer switch sizes shall use only one type of main operator for ease of maintenance and commonality of parts.
3. The switch shall be positively locked and unaffected by momentarily outages, so that contact pressure is maintained at a constant value and contact temperature rise is minimized for maximum reliability and operating life.
4. All main contacts shall be silver composition. Switches rated 600 amperes and above shall have segmented, blow-on construction for high withstand and close-on capability and be protected by separate arcing contacts.
5. Inspection of all contacts shall be possible from the front of the switch without disassembly of operating linkages and without disconnection of power conductors. Switches rated 800 amperes and higher shall have front removable and replaceable contacts. All stationary and moveable contacts shall be replaceable without removing power conductors and/or bus bars.
6. Designs utilizing components of molded-case circuit breakers, contactors, or parts thereof, which are not intended for continuous duty, repetitive switching or transfer between two active power sources, are not acceptable.
7. For two and three pole switches, where neutral conductors are to be solidly connected as shown on the plans, a neutral conductor plate with fully rated AL-CU pressure connectors shall be provided.
8. For four pole switches with a switching neutral, where neutral conductors must be switched as shown on the plans, the contactor shall be provided with fully rated switched neutral transfer contacts. Overlapping neutral contacts may be used as an alternative.

D Enclosure

3. The ATS shall be furnished in a NEMA 3R enclosure.
4. All standard door mounted switches and indicating LEDs shall be integrated into a flush-mounted, interface membrane or equivalent in the enclosure door for easy viewing & replacement. The panel shall be capable of having a manual locking feature to allow the user to lockout all membrane mounted control switches to prevent unauthorized tampering. This cover shall be mounted with hinges and have a latch that may be padlocked. The membrane panel shall be suitable for mounting by others when furnished on open type units.

2.2 Operation

A Controls

1. A four line, 20 character LCD display and dynamic 4 button keypad shall be an integral part of the controller for viewing all available data and setting desired operational parameters. Operational parameters shall also be available for viewing and control through the communications interface port or USB. The following parameters shall only be adjustable via a password protected programming on the controller:

a Nominal line voltage and frequency
b Single or three phase sensing
c Operating parameter protection
d Transfer operating mode configuration (Standard transition, Programmed transition, or Closed transition)

B Voltage and Frequency

1. Voltage (all phases) and frequency on both the normal and emergency sources shall be continuously monitored, with the following pickup, dropout, and trip setting capabilities (values shown as % of nominal unless otherwise specified):

	Parameter	Dropout/Trip	Pickup/Reset
a	Under voltage	75 to 98%	85 to 100%
b	Over voltage	106 to 135%	95 to 100% of trip
c	Under frequency	95 to 99%	80 to 95%
d	Over frequency	01 to 115%	105 to 120%
e	Voltage unbalance	5 to 20%	3 to 18%

2. Repetitive accuracy of all settings shall be within ± 0.5% over an operating temperature range of -20°C to 70°C.
3. An adjustable dropout time for transient voltage and frequency excursions shall be provided. The time delays shall be 0.1 to 9.9 seconds for voltage and .1 to 15 seconds for frequency.
4. Voltage and frequency settings shall be field adjustable in 1% increments either locally with the display and keypad, remotely via the communications interface port or USB.
5. The controller shall be capable of sensing the phase rotation of both the normal and emergency sources. The source shall be considered unacceptable if the phase rotation is not the preferred rotation selected (ABC or BAC). Unacceptable phase rotation shall be indicated on the LCD; the service required LED and the annunciation through the communication protocol and dry contacts. In addition, the phase rotation sensing shall be capable of being disabled, if required.
6. The controller shall be capable of detecting a single phasing condition of a source, even though a voltage may be regenerated by the load. This condition is a loss of phase and shall be considered a failed source.
7. Source status screens shall be provided for both normal & emergency to provide digital readout of voltage on all 3 phases (phase to phase and phase to neutral), frequency, and phase rotation.

C Time Delays

1. An adjustable time delay of 0 to 6 seconds shall be provided to override momentary normal source outages and delay all transfer and engine starting signals. Capability shall be provided to extend this time delay to 60 minutes by providing an external 12 or 24 VDC power supply.
2. A time delay shall be provided on transfer to the emergency source, adjustable from 0 to 60 minutes, for controlled timing of transfer of loads to emergency.
3. A time delay shall be provided on re-transfer to normal. The time delays shall be adjustable from 0 to 60 minutes. Time delay shall be automatically bypassed if the emergency source fails and the normal source is acceptable.
4. A time delay shall be provided on shut down of engine generator for cool down, adjustable from 0 to 60 minutes.
5. A time delay activated output signal shall also be provided to drive external relay(s) for selective load disconnect and reconnect control. The controller shall be capable of controlling a maximum of 9 individual output time delays to step loads on after a transfer occurs. Each output may be individually programmed for their own time delay of up to 60 minutes. Each sequence shall be independently programmed for transferring from normal to emergency and transferring from emergency to normal.
6. All time delays shall be adjustable in 1 second increments.
7. All time delays shall be adjustable by using the display and keypad, with a remote device connected to the communications interface port or USB.
8. Each time delay shall be identified and a dynamic countdown shall be shown on the display. Active time delays can be viewed with a remote device connected to the communications interface port or USB.

D Additional Features

1. The controller shall have 3 levels of security. Level 1 shall allow monitoring of settings and parameters only. The Level 1 shall be capable of restricted with the use of a lockable cover. Level 2 shall allow test functions to be performed and Level 3 shall allow setting of all parameters.
2. The display shall provide for the test functions, allowed through password security. The test function shall be load, no load or auto test. The auto test function shall request an elapsed time for test. At the completion of this time delay the test shall be automatically ended and a retransfer sequence shall commence. All loaded tests shall be immediately ended and retransfer shall occur if the emergency source fails and the normal source is acceptable.
3. A contact closure shall be provided for a low-voltage engine start signal. The start signal shall prevent dry cranking of the engine by requiring the generator set to reach proper output, and run for the duration of the cool down setting, regardless of whether the normal source restores before the load is transferred.
4. Auxiliary contacts shall be provided consisting of a minimum of two contacts, closed when the ATS is connected to the normal source and two contacts closed, when the ATS is connected to the emergency source.
5. LED indicating lights shall be provided; one to indicate when the ATS is connected to the normal source (green) and one to indicate when the ATS is connected to the emergency source (red).
6. LED indicating lights shall be provided and energized by controller outputs. The lights shall provide true source availability of the normal (green) and emergency sources (red), as determined by the voltage, frequency and phase rotation sensing trip and reset settings for each source.
7. A membrane switch shall be provided on the membrane panel to test all indicating lights and display when pressed.
8. Provide the ability to select “commit/no commit to transfer" to determine whether the load should be transferred to the emergency generator if the normal source restores before the generator is ready to accept the load.
9. Terminals shall be provided for a remote contact which opens to signal the ATS to transfer to emergency and for remote contacts which closes to inhibit transfer to emergency and/or retransfer to normal. Both of these inhibit signals can be activated through the keypad, communications interface port or USB. A “not-in-auto" LED shall indicate anytime the controller is inhibiting transfer from occurring.
10. The programmed transition feature shall control the transfer so that mechanism is placed in a load disconnect position for an adjustable period of time, giving motor and transformer loads and opportunity to decay to acceptable levels. The programmed transition feature shall be specifically designed for and be the product of the ATS manufacturer. The programmed transition setting shall be capable of being enabled or disabled from the user interface, communications interface port of USB. The controller shall include a built-in time delay for programmed transition operation. This time shall be adjustable from the user interface. The default value shall be 1 second and shall be adjustable from 0 to 60 minutes.
11. A time based load control feature shall be available to allow the prioritized addition and removal of loads based during transfer. This feature may be enabled for either or both sources. The user shall be able to control up to nine loads with independent timing sequences for pre and post transfer delays in either direction of transfer.
12. The controller shall provide 2 inputs for external controls that can be programmed from the following values:
    a Common fault, Remote test, Inhibit transfer, Low battery voltage, Peak shave, Time delay bypass, Load shed forced to OFF position (Programmed transition only)
13. The controller shall provide two form "C" contact outputs rated for up to 12A @ 240VAC or 2A @ 480VAC that can be programmed from the following values:
    a Aux switch open, Transfer switch aux contact fault, Alarm silenced, Alarm active, I/O communication loss, Contactor position, Exercise active, Test mode active, Fail to transfer, Fail to acquire standby source, Source available, Phase rotation error, Not in automatic mode, Common alarm, In phase monitor sync, Load bank control active, Load control active, Maintenance mode active, Non-emergency transfer, Fail to open/close, Loss of phase, Over/under voltage, Over/under frequency, Voltage unbalance, Start signal, Peak shave active, Preferred source supplying load, Standby source supplying load
14. The controller shall be capable of expanding the number of inputs and outputs with additional modules.
15. Optional input/output modules shall be furnished which mount on the inside of the enclosure to facilitate ease of connections.

16. Engine Exerciser - The controller shall provide an internal engine exerciser. The engine exerciser shall allow the user to program up to 21 different exercise routines based on a calendar mode. For each routine, the user shall be able to:
    a. Enable or disable the routine
    b. Enable or disable transfer of the load during routine.
    c. Set the start time, time of day, day of week, week of month (1st, 2nd, 3rd, 4th, alternate or every)
    d. Set the duration of the run.
    e. At the end of the specified loaded exercise duration the switch shall transfer the load back to normal and run the generator for the specified cool down period. All loaded exercises shall be immediately ended and retransfer shall occur if the standby source fails. The next exercise period shall be displayed on the main screen with the type of exercise, time and date. The type of exercise and the time remaining shall be display when the exercise is active. It shall be possible of ending the exercise event with a single button push.
17. Date and time - The date shall automatically adjust for leap year and the time shall have the capability of automatically adjusting for daylight saving and standard times.
18. System Status - The controller shall have a default display the following on:
    a. System status
    b. Date, time and type of the next exercise event
    c. Average voltage of the preferred and standby sources
    d. Scrolling through the displays shall indicate the following:
        1) Line to line and line to neutral voltages for both sources
        2) Frequency of each source
        3) Single or three phase operation
        4) Type of transition
        5) Preferred source
        6) Commit or no commit modes of operation
        7) Source/source mode
        8) In phase monitor enable/disable
        9) Phase rotation
        10) Date and time
19. Controllers that require multiple screens to determine system status or display “coded" system status messages, which must be explained by references in the operator’s manual, are not permissible.
20. Self-Diagnostics - The controller shall contain a diagnostic screen for the purpose of detecting system errors. This screen shall provide information on the status input signals to the controller which may be preventing load transfer commands from being completed.
21. Communications Interface - The controller shall be capable of interfacing, through a standard communication with a network of transfer switches and generators. It shall be able to be connected via an RS-485 serial communication (up to 4000 ft. direct connect or multi-drop configuration). This module shall allow for seamless integration of existing or new communication transfer devices and generators.
22. The transfer switch shall also be able to interface to 3rd party applications using Modbus RTU open standard protocols utilizing Modbus register maps. Proprietary protocols shall not be acceptable.
23. The controller shall contain a USB port for use with a software diagnostic application available to factory authorized personnel for downloading the controller’s parameters and settings; exercise event schedules; maintenance records and event history. The application can also adjust parameters on the controller.
24. Data Logging - The controller shall have the ability to log data and to maintain the last 2000 events, even in the event of total power loss. The following events shall be time and date stamped and maintained in a non-volatile memory. The controller shall be able to display up to the last 99 events. The remaining events shall be accessible via the communications interface port or USB.
    a. Event Logging
        1) Data, date and time indication of any event
    b. Statistical Data
        1) Total number of transfers*
        2) Total number of fail to transfers*
        3) Total number of transfers due to preferred source failure*

4) Total number of minutes of operation*
5) Total number of minutes in the standby source*
6) Total number of minutes not in the preferred source*
7) Normal to emergency transfer time
8) Emergency to normal transfer time
9) System start date
10) Last maintenance date
11) * The statistical data shall be held in two registers. One register shall contain data since start up and the second register shall contain data from the last maintenance reset.

25. External DC Power Supply - An optional provision shall be available to connect up to two external 12/24 VDC power supply to allow the LCD and the door mounted control indicators to remain functional when both power sources are dead for extended periods of time. This module shall contain reverse battery connection indication and circuit protection.

2.3 Service Entrance Switch

A. A two position disconnect switch shall be provided to disconnect the normal source and inhibit during maintenance or emergency.
   i. The controller shall display SERVICE DISCONNECT
   ii. Further transfer in inhibited after transfer to Emergency
B. Molded case circuit breakers (MCCB) shall be 80% rated. Molded case switches (MCSW) shall be 100% rated. Insulated case circuit breakers and insulated case switches shall be 100% rated.
C. The transfer switch mechanism shall provide a simple means of manual operation using only components, which are permanently affixed, in the operating position.
D. The unit shall permit manual operation of the transfer switch while the system is energized and carrying rated load. Transfer switches, which require all sources of power to be de-energized prior to manual load transferring, shall not be acceptable.
E. A control circuit isolation plug shall be provided to isolate all control circuitry inside the transfer switch to facilitate maintenance procedures. When isolated, there shall be no voltage present on the control circuitry.
F. Cable Connections: Provision shall be made to terminate all incoming and outgoing power cables and grounding conductors. Connections shall be via screw type cable lugs.
G. The Power Switching units shall be fix-mounted, utilize fully enclosed contacts and their withstand/closing rating shall be equal to or exceed the required withstand rating of the complete mechanism.
H. The service entrance rated automatic transfer switch shall automatically transfer the load to the generator supply in the event of a utility supply failure and return the load to the utility supply upon restoration. The transfer switch shall incorporate and isolating mechanism and over current protection on the utility supply to allow operation s the main services disconnect in accordance with NEC requirements. The transfer switch power switching devices shall be mechanically and electrically interlocked to prevent the utility and generator supplies from being interconnected.
I. Insulated Case Circuit Breaker Service Entrance Rated Transfer Switches
   i. The normal connection shall be provided with an electronic trip, 100% rated insulated case breaker with a 2000 amp current rating.

2.4 Accessories

A. Padlockable User Interface Cover. The user interface cover shall protect the controller user interface from the environment.
B. Controller Disconnect Switch. A Logic disconnect switch shall be mounted inside the enclosure, and shall disconnect power to controller without disconnecting the load. The logic disconnect switch shall disconnect utility power to the controller during maintenance and service without disconnecting power to the load. The switch has two positions, auto and disconnect. The disconnect position shall disconnect the voltage sensing leads for the utility source (A, B, C, N). It is assumed that the user shall disable the generator by placing the controller in the OFF position.
C. Programmable Exerciser. A programmable exerciser shall be supplied to allow programming of up to 56 on/off events.
D. Standard I/O Module. The standard I/O Module shall have two programmable inputs and six programmable outputs.

a. Inputs Available 2
   i. Contact Closure
   ii. Current 5mA Max.
   iii. Connection Type Terminal Strip
   iv. Wire Size #14-24 AWG
   v. Max Distance 700 feet
b. Outputs Available 6
   i. Contact Type Form C (SPDT)
   ii. Contact Rating 2A @ 30VDC, 500mA @ 125VAC
   iii. Connection Type Terminal Strip
   iv. Wire Size #14-24

E. Alarm Module. The alarm module shall be 90dB audible alarm; any alarm function can be programmed to trigger the audible alarm, with external alarm connection. The audible alarm can be set to sound under selected fault conditions through setup on the user interface. The other options that can be activated with the alarm board are the Chicago alarm option, Preferred Source selection and the Supervised Transfer Control Switch.

2.5 Source Quality Control

A Test and Inspection

1. Upon request, the manufacturer shall provide a notarized letter certifying compliance with all of the requirements of this specification including compliance with the above codes and standards. The certification shall identify, by serial number(s), the equipment involved. No exceptions to the specifications, other than those stipulated at the time of the submittal, shall be included in the certification.
2. The ATS manufacturer shall be certified to ISO 9001 International Quality Standard and the manufacturer shall have third party certification verifying quality assurance in design/development, production, installation and servicing in accordance with ISO 9001.

END OF SECTION

SECTION 26 32 13.1

ENGINE GENERATOR

PART 1 GENERAL

1.1 Summary

A This section includes the following items from a single supplier:
1. Engine Generator Set.
2. Enclosure
3. Related Accessories as specified

B Related Requirements
1. It is the intent of this specification to secure an engine-driven generator set that has been prototype tested, factory built, production-tested, and site-tested together with all accessories necessary for a complete installation as shown on the plans and drawings and specified herein.
2. Any exceptions to the published specifications shall be subject to the approval of the engineer and submitted minimum 10 days prior to the closing of the bid with a line by line summary description of all the items of compliance, any items that have been are omitted or have been taken exception to, and a complete description of all deviations.
3. It is the intent of this specification to secure a generator set system that has been tested during design verification, in production, and at the final job site. The generator set will be a commercial design and will be complete with all of the necessary accessories for complete installation as shown on the plans, drawings, and specifications herein. The equipment supplied shall meet the requirements of the National Electrical Code and applicable local codes and regulations.
4. All equipment shall be new and of current production by an international, power system manufacturer of generators, transfer switches, and paralleling switchgear. The manufacturer shall be a supplier of a complete and coordinated system. There will be single-source responsibility for warranty, parts, and service through a factory-authorized representative with factory-trained technicians.

1.2 Submittals

A Action Submittals
1. Product Data
   a The submittal shall include prototype test certification and specification sheets showing all standard and optional accessories to be supplied; schematic wiring diagrams, dimension drawings, and interconnection diagrams identifying by terminal number each required interconnection between the generator set, the transfer switch, and the remote annunciator panel if it is included elsewhere in these specifications.

B Informational Submittal
1. Certificates
   a The generator set shall be listed to UL 2200 or submitted to an independent third-party certification process to verify compliance as installed.

C Closeout Submittal
1. Maintenance Contracts
2. Operation and Maintenance Data
3. Warranty Documentation
4. Record Documentation

1.3 Quality Assurance

A Regulatory Agency
1. The generator set shall conform to the requirements of the following codes and standards:

   a CSA C22.2, No. 14-M91 Industrial Control Equipment.
   b EN50082-2, Electromagnetic Compatibility-Generic Immunity Requirements, Part 2: Industrial.

c EN55011, Limits and Methods of Measurement of Radio Interference Characteristics of Industrial, Scientific and Medical Equipment.
d IEC8528 part 4, Control Systems for Generator Sets.
e IEC Std 61000-2 and 61000-3 for susceptibility, 61000-6 radiated and conducted electromagnetic emissions.
f IEEE446 Recommended Practice for Emergency and Standby Power Systems for Commercial and Industrial Applications.
g NFPA 70, National Electrical Code, Equipment shall be suitable for use in systems in compliance to Article 700, 701, and 702.
h NFPA 99, Essential Electrical Systems for Health Care Facilities.
i NFPA 110, Emergency and Standby Power Systems. The generator set shall meet all requirements for Level 1 systems. Level 1 prototype tests required by this standard shall have been performed on a complete and functional unit. Component level type tests will not substitute for this requirement.

2. Qualifications
a The equipment shall be produced by a manufacturer who is ISO 9001 certified for the design, development, production and service of its complete product line.
b The power system shall be produced by a manufacturer who has produced this type of equipment for a period of at least 10 years and who maintains a service organization available twenty-four hours a day throughout the year.

3. Manufacturers
a The power system shall be furnished by a single manufacturer who shall be responsible for the design, coordination, and testing of the complete system. The entire system shall be installed as shown on the plans, drawings, and specifications herein.
b The basis of design is a Kohler model 15REOZK. If the supplier wishes to propose equivalent equipment as manufactured by Caterpillar, all additional costs associated with re-engineering and mechanical & electrical modifications to the installation will be at the contractor's expense. The contractor must also supply the details below with his proposal:

- A line-by-line clarification of the specification marked with "D" for deviation; "E" for exception, and "C" for comply.
- The weight & outline dimensions of the proposed equipment.

Upon request, the manufacturer shall provide a notarized letter certifying compliance with all of the requirements of this specification. No exceptions to the specifications shall be allowed or included in the certification.

1.4 Warranty

A Manufacturer's Warranty

1. The generator set shall include a standard warranty covering one (1) year or 2000 hours, whichever occurs first, to guarantee against defective material and workmanship in accordance with the manufacturer's published warranty from the date of initial startup.
2. The generator set manufacturer and its distributor shall maintain a 24-hour parts and service organization. This organization shall regularly engage in maintenance contract programs to perform preventive maintenance and service on equipment similar to that specified. A service agreement shall be available and shall include system operation under simulated operating conditions; adjustment to the generator set, transfer switch, and switchgear controls as required, and certification in the owner's maintenance log of repairs made and functional tests performed on all systems.

PART 2 PRODUCTS

2.1 Equipment

A Equipment

1. The generator set shall be a Kohler model 15REOZK with a 4D5.6 alternator. It shall provide 18.8 kVA and 15 kW when operating at 277/480 volts, 60 Hz, 0.80 power factor. The generator set shall be capable of a 130°C Standby rating while operating in an ambient condition of less than or equal to 77 °F and a maximum elevation of 500 ft above sea level. The standby rating shall be available for the duration of the outage.

B Engine
1. The minimum 1.9 liter displacement engine shall deliver a minimum of 28 HP at a governed engine speed of 1800 rpm, and shall be equipped with the following:
    a. Electronic isochronous governor capable of 0.25% steady-state frequency regulation
    b. 12-volt positive-engagement solenoid shift-starting motors
    c. 50-ampere automatic battery charging alternator with a solid-state voltage regulation
    d. Positive displacement, full-pressure lubrication oil pump, cartridge oil filters, dipstick, and oil drain
    e. Dry-type replaceable air cleaner elements for normal applications
    f. Engine-driven or electric fuel-transfer pump including fuel filter and electric solenoid fuel shutoff valve capable of lifting fuel
    g. The turbocharged engine shall be fueled by diesel
    h. The engine shall have a minimum of 4 cylinders and be liquid-cooled
2. The engine shall be EPA certified from the factory
3. The generator must accept rated load in one-step.

C Cooling System
1. The engine shall be liquid-cooled by a closed loop, unit mounted radiator rated to operate the generator set at full load at an ambient temperature of 50 degrees C (122 degrees F). The radiator fan and other rotating engine parts shall be guarded against accidental contact.

D Standard Air Cleaner
1. The air cleaner shall provide engine air filtration which meets the engine manufacturer's specifications under typical operating conditions.

E Battery
1. Each genset requires a quantity of one group 24 batteries which must meet the engine manufactures' specifications for the ambient conditions specified in Part 1 Project Conditions and shall comply with the NFPA requirements for engine cranking cycles. Each battery shall be rated according to SAE Standards J-537 with a minimum cold cranking amp of 650 amps and a minimum reserve capacity of 430 Minutes at 80F. The battery must contain two handles to aid in lifting and the case must be constructed of polypropylene to resist breakage and extend service life. Removable cell covers shall be provided to allow for checking of electrolyte specific gravity.
2. Battery rack and battery cables capable of holding the manufacturer's recommended batteries shall be supplied.

F Housing
1. Level 2 Sound Attenuated Enclosure
a The generator set shall be supplied with a Level 2 Sound Attenuated Enclosure, providing a sound level of 64.4 dB(A) while the generator is operating at 100% load at 7 meters (23 feet) using acoustic insulation and acoustic-lined inlet hoods, and using acoustic insulation and acoustic-lined inlet hoods, constructed from a minimum of 0.125 inch thick formed heavy duty aluminum panels. The acoustic insulation used shall meet UL 94 HF1 flammability classification. The enclosure shall be manufactured from bolted panels to facilitate service, future modifications, or field replacement. The enclosure shall use external vertical air inlet and outlet hoods with 90 degree angles to discharge air up and reduce noise. The enclosure shall have an integral rodent guard and skid end caps and shall have bracing to meet 241 kph (150 mph) wind loading.
b The enclosure components and skid shall be cleaned with a two-stage alkaline cleaning process to remove grease, grit, and grime from parts. Components shall then be subjected to a Zirconium-based conversion coating process to prepare the metal for electrocoat (e-coat) adhesion. All enclosure parts shall receive an 100% epoxy primer electrocoat (e-coat) with high-edge protection. Following the e-coat process, the parts shall be finish coated with powder baked paint for superior finish, durability, and appearance with a Power ArmorTM industrial finish that provides heavy duty durability in harsh conditions, and is fade-, scratch- and corrosion-resistant.

c The enclosure must surpass a 3,000 hour salt spray corrosion test per ASTM B-1117.
d Enclosures will be finished in the manufacturer's standard color.
e The enclosures shall allow the generator set to operate at full load in an ambient temperature of 50°C with no additional derating of the electrical output of the generator set.
f Enclosures shall be equipped with sufficient side and end doors to allow access for operation, inspection, and service of the unit and all options. Minimum requirements are two doors per side. When the generator set controller faces the rear of the generator set, an additional rear facing door is required. Access to the controller and main line circuit breaker shall meet the requirements of the National Electric Code.
g Doors shall be fitted with hinges, hardware, and the doors shall be removable.
h Doors shall be equipped with lockable latches. Locks shall be keyed alike. Door locks shall be recessed to minimize potential of damage to door/enclosure.
i A duct between the radiator and air outlet shall be provided to prevent re-circulation of hot air.
j The complete exhaust system shall be internal to the enclosure.
k The critical silencer shall be fitted with a tailpipe and rain cap.

G Fuel oil storage
1. Double Wall Secondary Containment Sub-base Fuel Tank
a The generator set shall be supplied with a sub-base fuel tank of sufficient capacity to hold a minimum of 24 hours of fuel at 100% loading.
b The sub-base fuel system shall be listed under UL 142, subsection entitled Special Purpose Tanks EFVT category, and will bear their mark of UL Approval according to their particular classification.
c The above ground steel secondary containment rectangular tank for use as a sub base for diesel generators is manufactured and intended to be installed in accordance with the Flammable and Combustible Liquids Code—NFPA 30, the Standard for Installation and Use of Stationary Combustible Engine and Gas Turbines—NFPA 37, and Emergency and Standby Power Systems—NFPA 110.
d The primary tank shall be rectangular in shape and constructed in clam shell fashion to ensure maximum structural integrity and allow the use of a full throat fillet weld.
e Steel Channel Support System. Reinforced steel box channel for generator support, with a load rating of 5,000 lbs. per generator mounting hole location. Full height gussets at either end of channel and at generator mounting holes shall be utilized.
f Exterior Finish. The sub-base tank exterior finish shall be Power Armor PlusTM, a polyurea-textured rubberized coating.
g Normal venting shall be sized in accordance with the American Petroleum Institute Standard No 2000, Venting Atmospheric and Low Pressure Storage Tanks not less than 1-1/4" (3 cm.) nominal inside diameter.
h The emergency vent opening shall be sized to accommodate the total capacity of both normal and emergency venting and shall be not less than that derived from NFPA 30, table 2-8, and based on the wetted surface area of the tank. The wetted area of the tank shall be calculated on the basis of 100 percent of the primary tank. The vent is to be spring-pressure operated: opening pressure is 0.5/psig and full opening pressure is 2.5 psig. The emergency relief vent is to be sized to accommodate the total venting capacity of both normal and emergency vents.
i There shall be a 2" NPT opening within the primary tank and lockable manual fill cap.
j A direct reading, UL listed, magnetic fuel level gauge with a hermetically sealed, vacuum tested dial, to eliminate fogging, shall be provided.
k A float switch for remote or local annunciation of a (50% standard) low fuel level condition shall be supplied.

H Controller
1. APM402 Generator Set Controller

a. The generator set controller shall be a microprocessor based control system that will provide automatic starting, system monitoring, and protection. The controller system shall also provide local monitoring and remote monitoring. The control system shall be capable of PC based updating of all necessary parameters, firmware, and software.
b. The controller shall be mounted on the generator set and shall have integral vibration isolation. The controller shall be prototype and reliability tested to ensure operation in

the conditions encountered.

2. Codes and Standards

    a. The generator set controller shall meet NFPA 110 Level 1 requirements and shall include an integral alarm horn as required by NFPA.
    b. The controller shall meet NFPA 99 and NEC requirements.
    c. The controller shall be UL 508 listed.

3. Applicability

    a. The controller shall be a standard offering in the manufacturer's controller product line.
    b. The controller shall support 12-volt and 24volt starting systems.
    c. The controller's environmental specification shall be: -40°C to 70°C operating temperature range and 5-95% humidity, non-condensing.
    d. The controller shall mount on the generator or remotely within 40 feet with viewable access.

4. Controller Buttons, Display and Components

    a. The generator set controller shall include the following features and functions:
        1. Push button Master Control buttons. The buttons shall be tactile-feel membrane with an indicator light to initiate the following functions:
            a. Run Mode: When in the run mode the generator set shall start as directed by the operator.
            b. Off/Reset Mode: When in the Off/Reset mode the generator set shall stop, the reset shall reset all faults, allowing for the restarting of the generator set after a shutdown.
            c. Auto Mode: When in Auto the mode the generator set shall be ready to accept a signal from a remote device.
        2. Emergency Stop Switch. The remote stop switch shall be red in color with a "mushroom" type head. Depressing the stop button will immediately stop the generator set and lockout the generator set for any automatic remote starting.
        3. Push Button/Rotary Selector dial. This dial shall be used for selection of all Menus and sub-menus. Rotating the dial moves you through the menus, pushing the dial selects the menu and function/features in that menu. Pushing the button selects the feature/function and sub-menus.
        4. Digital Display. The digital display shall be alphanumeric, with 2 lines of data and approximately 24 charters. The display shall have back lighting for ease of operator use in high and low light conditions. The display shall display status of all faults and warnings. The display shall also display any engine faults. While the generator set is running, the display shall scroll all-important information across the screen for ease of operator use. The scroll can be stopped by pushing the rotary dial. The display shall fall asleep when the generator set is not running and will wake-up when the generator set starts or the rotary dial is depressed.
        5. Fault Light. The controller shall have an annunciator fault light that glows red for faults and yellow for warnings. These faults and warnings shall be displayed in the digital display. The fault light will also glow yellow when not in AUTO.
        6. Alarm Horn. The controller shall provide an alarm horn that sounds when any faults or warnings are present. The horn shall also sound when the controller is not in the AUTO mode.
        7. Alarm Silence/Lamp Test Button. When this button is depressed, it shall test all controller lamps. This button will also silence the alarm horn when the unit is not AUTO.
        8. USB Connection. The controller shall have a USB connection on the face of the controller. This connection shall allow for updating of all software and firmware. This port shall also allow for all servicing of generator set parameters, fault diagnostics and viewing of all controller information via use a laptop computer.
        9. Dedicated user inputs. The controller shall have dedicated inputs for remote

emergency stop switch, remote 2-wire star for transfer switch and auxiliary shutdown.

10. The controller shall have auto resettable circuit protection integral on the circuit board.

5. System Controller Monitoring and Status Features and Functions

a. The generator controller shall display and monitor the following engine and alternator functions and allow adjustments of certain parameters at the controller:
    1. Overview menu
        a. Active shutdowns and warnings shall be displayed if present and without the need of operator interface
        b. Engine runtime with total hours
        c. Average line to line voltage
        d. Coolant temperature
        e. Fuel level or pressure
        f. Oil pressure
        g. Battery voltage
        h. Software version
        i. Frequency
        j. Average current
    2. Engine metering menu.
        a. Engine speed
        b. Oil pressure
        c. Coolant temperature
        d. Battery voltage
    3. Generator metering menu.
        a. Total power in VA
        b. Total power in W
        c. Rated power % used
        d. Voltage L-L and L-N for all phases
        e. Current L1, L2, L3
        f. Frequency
    4. Generator set information.
        a. Generator set model number
        b. Generator set serial number
        c. Controller set number
    5. Generator set run time.
        a. Engine run time total hours
        b. Engine loaded total hours
        c. Number of engine starts
        d. Total energy in kW
    6. Generator set system
        a. System voltage
        b. System frequency 50/60Hz
        c. System phase, single/three phase
        d. Power rating kW
        e. Amperage rating
        f. Power type standby/prime
        g. Measurement units, metric/English units adjustable
        h. Alarm silence, always or auto only
    7. Generator set calibration, the following are adjustable at the controller.
        a. Voltage L-L and L-N all phases
        b. Current L1, L2, L3
        c. Reset all calibrations
    8. Voltage regulation, +/-0.5% regulation, the following is adjustable at the controller.
        a. Voltage Adjustable +/- 10%
    9. Digital and Analog Inputs and outputs
        a. Displays settings and status

10. Event Log
    a. Stores event history, up to 1000 events

6. Controller Engine control features and functions

    a. Automatic restart - the controller has automatic restart feature that initiates the start routine and re-crank after a failed start attempt.
    b. Cyclic cranking - the controller shall have programmable cyclic cranking
    c. Engine starting aid - the controller shall have the capability of providing control for an optional engine starting aid.
    d. The control system shall include time delays for engine start and cool down.
    e. The control system shall interface with the engine ECM and display engine fault codes and warnings. The ECM shall also include sender failure monitoring to help distinguish between failed senders and actual failure conditions.
    f. The controller shall monitor and display engine governor functions with include steady state and transient frequency monitoring

7. Controller Alternator control features and functions

    a. Integrated hybrid voltage regulator. The system shall have integral microprocessor based voltage regulator system that provides +/- 5% voltage regulation, no-load to full load with three phase sensing. The system is prototype tested and control variation of voltage to frequency. The voltage regulator shall be adjustable at the controller with maximum +/- 10% adjustable of nominal voltage.
    b. AC output voltage regulator adjustment. The system shall allow for adjustment of the integral voltage regulator with maximum of +/- 10% adjustment of the system voltage.
    c. Alternator thermal overload protection. The system shall have integral alternator overload and short circuit protection matched to each alternator for the particular voltage and phase configuration.
    d. Power metering. The controller digitally displays power metering of kW and kVA.

8. Other control features and functions

    a. Event logging. The controller keeps a record of up to 1000 events, for warning and shutdown faults. This fault information becomes a stored record of systems events and can be reset.
    b. Historical data logging. The controller total number of generator set successful start shall be recorded and displayed.
    c. Programmable access. The control system shall include a USB port that gives service technicians the ability to provide software and firmware upgrades. The system shall also be capable of allowing setting of all critical parameters using the service software and a laptop computer. All parameters and setting should be capable to being stored on a laptop for future upgrades of printing for analysis.

9. Generator Set Warning, Shutdown Alarm and Status

    a. The generator set shall have alarms and status indication lamps that show non-automatic status and warning and shutdown conditions. The controller shall indicate with a warning lamp and or alarm and on the digital display screen any shutdown, warning or engine fault condition that exists in the generator set system. The following alarms and shutdowns shall exist as a minimum:
        1. Engine functions
            a. Critical high fuel level (alarm)
            b. ECM communication loss (shutdown)
            c. ECM diagnostics (alarm & shutdown)
            d. Engine overspeed (shutdown)
            e. Engine start aid active
            f. Engine under speed (shutdown)
            g. Fuel tank leak (alarm & shutdown)

h. High DC battery voltage (alarm)
i. High coolant temperature (alarm & shutdown)
j. High fuel level (alarm)
k. Low DC battery voltage (alarm)
l. Low coolant level (shutdown)
m. Low coolant temperature (alarm)
n. Low cranking voltage (alarm)
o. Low engine oil level (alarm & shutdown)
p. Low fuel level (alarm & shutdown)
q. Low fuel pressure (alarm)
r. Low oil pressure (alarm & shutdown)
s. No coolant temperature signal (shutdown)
t. No oil pressure signal (shutdown)
u. Overcrank (shutdown)
v. Speed sensor fault (alarm)

2. Generator functions
   a. AC sensing loss over & under current (alarm & shutdown)
   b. Alternator protection (shutdown)
   c. Ground fault input (alarm)
   d. kW overload (shutdown)
   e. Locked rotor (shutdown)
   f. Over-frequency (shutdown)
   g. Over AC voltage (shutdown)
   h. Under-frequency (shutdown)
   i. Under AC voltage (shutdown)
   j. Emergency stop (shutdown)
3. Other General functions
   a. Battery charger fault (alarm)
   b. Common fault (shutdown)
   c. Common warning (alarm)
   d. Master switch not in auto (alarm)
   e. Generator running
   f. Input/Output fault (alarm)
4. The generator set controller shall also be capable of meeting all necessary NFPA 110 level 1 requirements that include several of the above along with; EPS supplying load, Master switch “not in auto”, and contacts for local and remote common alarm.

10. Communications

a. The controller shall communicate with the ECM for control, monitoring, diagnosis, and meet SAE J1939 standards
b. Kohler proprietary RBUS communication shall be available.
c. A RBUS shall be able to monitor and alter parameters, and start or stop a generator.
d. The controller shall have the capability to communicate to a personal computer (IBM or compatible) and appropriate application software
e. A variety of connections shall be available based on requirements:
   1. A single control connection to a PC via USB
   2. Internet connection via Ethernet
f. Generator and transfer switch controls shall be equipped with communications modules capable of connecting to the same communication network.

I Generator Overcurrent and Fault Protection

1. The generator shall be provided with a factory installed, 80% rated line circuit breaker rated at 30 amperes that is UL489 listed. Line circuit breakers shall be sized for the rated ampacity of the loads served by the breaker per the NEC.
2. The circuit breaker(s) shall incorporate a thermo-magnetic trip unit.
3. When GFI is required per the NEC, additional neutrals shall be factory installed, and the alarm indication shall be integrated with the other generator set alarms.

4. Barriers to provide segregation of wiring from an emergency source to emergency loads from all other wiring and equipment, if required by the NEC, shall be provided.

J Alternator

1. The alternator shall be salient-pole, brushless, 2/3-pitch, with 4 bus bar provision for external connections, self-ventilated, with drip-proof construction and amortisseur rotor windings, and skewed for smooth voltage waveform. The ratings shall meet the NEMA standard (MG1-32.40) temperature rise limits. The insulation shall be class H per UL1446 and the varnish shall be a vacuum pressure impregnated, fungus resistant epoxy. Temperature rise of the rotor and stator shall be limited to 130°C Standby. The PMG based excitation system shall be of brushless construction controlled by a digital, three phase sensing, solid- state, voltage regulator. The AVR shall be capable of proper operation under severe nonlinear loads and provide individual adjustments for voltage range, stability and volts-per-hertz operations. The AVR shall be protected from the environment by conformal coating. The waveform harmonic distortion shall not exceed 5% total RMS measured line-to-line at full rated load. The TIF factor shall not exceed 50.
2. The alternator shall have a maintenance-free bearing, designed for 40000 hour B10 life. The alternator shall be directly connected to the flywheel housing with a semi-flexible coupling between the rotor and the flywheel.
3. The generator shall be inherently capable of sustaining at least 300% of rated current for at least 10 seconds under a 3-phase symmetrical short circuit without the addition of separate current-support devices.
4. Motor starting performance and voltage dip determinations shall be based on the complete generator set. The generator set shall be capable of supplying 75 LRKVA for starting motor loads with a maximum instantaneous voltage dip of 35%, as measured by a digital RMS transient recorder in accordance with IEEE Standard 115. Motor starting performance and voltage dip determination that does not account for all components affecting total voltage dip, i.e., engine, alternator, voltage regulator, and governor will not be acceptable. As such, the generator set shall be prototype tested to optimize and determine performance as a generator set system.

K Vibration Isolation

1. Vibration isolators shall be provided between the engine-alternator and heavy-duty steel base.

2.2 Accessories

A. The generator set shall be supplied with a 6-ampere automatic float/equalize battery charger capable of charging both lead-acid and gel-cell type batteries, with the following features:
   i. Automatic 3-stage float to equalization charge
   ii. 1% steady-state voltage regulation from no load to full load over 10% AC input line voltage variation
   iii. Indicator LED lamps for charge state indication (bulk charge/absorption/float)
   iv. Ambient temperature operating range: -40°C to 70°C
   v. Potting for durability and waterproofing
   vi. Short-circuit and reverse polarity protection
   vii. UL 1236 listed
   viii. UL 2200 compliant
   ix. CSA certified
   x. Ring terminals for battery connection
B. Battery rack and battery cables capable of holding the manufacturer's recommended batteries shall be supplied.
C. The air cleaner restriction indicator shall indicate the need for maintenance of the air cleaners.
D. The exhaust piping shall be gas proof, seamless, stainless steel, flexible exhaust bellows and includes the flex exhaust tube and the mounting hardware.
E. Block Heater - The block heater shall be thermostatically controlled, 600 watt, 110-120 VAC, to maintain manufacturers recommended engine coolant temperature to meet the start-up requirements of NFPA 99 and NFPA 110, Level 1.
F. Supply flexible fuel lines to provide a flexible connection between the engine fuel fittings and the fuel supply tank piping and for the fuel return lines from the injector pump per engine manufacturer’s recommendations. Flex line shall have a protective steel wire braid to protect the hose from abrasion.

G. Input/Output Module Board -- Generator controller shall be provided with board providing two analog or digital inputs and 5 digital outputs.
H. The generator set shall be provided with a run relay which shall provide a three-pole, double-throw relay with 10-amp/ 250 VAC contacts to indicate that the generator is running. The run relay dry contacts can be used for energizing or de-energizing customer devices while the generator is running (e.g. louvers, indicator lamps, etc.)

2.3 Source Quality Control

A. Non-Conforming Work

1. To ensure that the equipment has been designed and built to the highest reliability and quality standards, the manufacturer and/or local representative shall be responsible for three separate tests: design prototype tests, final production tests, and site tests.

a. **Design Prototype Tests.** Components of the emergency system, such as the engine/generator set, transfer switch, and accessories, shall not be subjected to prototype tests because the tests are potentially damaging. Rather, similar design prototypes and preproduction models shall be subject to the following tests:
   i. Maximum power (kW)
   ii. Maximum motor starting (kVA) at 35% instantaneous voltage dip.
   iii. Alternator temperature rise by embedded thermocouple and/or by resistance method per NEMA MG1-32.6.
   iv. Governor speed regulation under steady-state and transient conditions.
   v. Voltage regulation and generator transient response.
   vi. Harmonic analysis, voltage waveform deviation, and telephone influence factor.
   vii. Three-phase short circuit tests.
   viii. Alternator cooling air flow.
   ix. Torsional analysis to verify that the generator set is free of harmful torsional stresses.
   x. Endurance testing.

b. **Final Production Tests.** Each generator set shall be tested under varying loads with guards and exhaust system in place. Tests shall include:
   i. Single-step load pickup
   ii. Safety shutdown device testing
   iii. Rated Power @ 0.8 PF
   iv. Maximum power
   v. Upon request, a witness test, or a certified test record sent prior to shipment.

c. **Site Tests.** The manufacturer's distribution representative shall perform an installation check, startup, and building load test. The engineer, regular operators, and the maintenance staff shall be notified of the time and date of the site test. The tests shall include:
   i. Fuel, lubricating oil, and antifreeze shall be checked for conformity to the manufacturer's recommendations, under the environmental conditions present and expected.
   ii. Accessories that normally function while the set is standing by shall be checked prior to cranking the engine. These shall include: block heaters, battery chargers, alternator strip heaters, remote annunciators, etc.
   iii. Generator set startup under test mode to check for exhaust leaks, path of exhaust gases outside the building, cooling air flow, movement during starting and stopping, vibration during operation, normal and emergency line-to-line voltage and frequency, and phase rotation.
   iv. Automatic start by means of a simulated power outage to test remote-automatic starting, transfer of the load, and automatic shutdown. Prior to this test, all transfer switch timers shall be adjusted for proper system coordination. Engine coolant temperature, oil pressure, and battery charge level along with generator set voltage, amperes, and frequency shall be monitored throughout the test.
   v. Load bank testing. The test shall consist of four hours of continuous operation using a portable resistive load bank. Adjust the load bank load to provide one half hour each at zero load, 25 percent, 50 percent, and 75

percent of full load. Followed by two hours of operation at rated standby load. Furnish the portable load bank, all connecting cables, metering equipment, and other equipment or devices required to perform the on-site testing. During the test, readings shall be taken every 15 minutes showing % load, voltage, amps, oil pressure, water temperature, and battery charge.

END OF SECTION

THIS PAGE INTENTIONALLY LEFT BLANK FOR DOUBLE SIDED PRINTING

SECTION 263213.2
ENGINE GENERATOR

PART 1 GENERAL

1.1 Summary

A This section includes the following items from a single supplier:
1. Engine Generator Set.
2. Enclosure
3. Related Accessories as specified

B Related Requirements
1. It is the intent of this specification to secure an engine-driven generator set that has been prototype tested, factory built, production-tested, and site-tested together with all accessories necessary for a complete installation as shown on the plans and drawings and specified herein.
2. Any exceptions to the published specifications shall be subject to the approval of the engineer and submitted minimum 10 days prior to the closing of the bid with a line by line summary description of all the items of compliance, any items that have been are omitted or have been taken exception to, and a complete description of all deviations.
3. It is the intent of this specification to secure a generator set system that has been tested during design verification, in production, and at the final job site. The generator set will be a commercial design and will be complete with all of the necessary accessories for complete installation as shown on the plans, drawings, and specifications herein. The equipment supplied shall meet the requirements of the National Electrical Code and applicable local codes and regulations.
4. All equipment shall be new and of current production by an international, power system manufacturer of generators, transfer switches, and paralleling switchgear. The manufacturer shall be a supplier of a complete and coordinated system. There will be single-source responsibility for warranty, parts, and service through a factory-authorized representative with factory-trained technicians.

1.2 Submittals

A Action Submittals
1. Product Data
   a The submittal shall include prototype test certification and specification sheets showing all standard and optional accessories to be supplied; schematic wiring diagrams, dimension drawings, and interconnection diagrams identifying by terminal number each required interconnection between the generator set, the transfer switch, and the remote annunciator panel if it is included elsewhere in these specifications.

B Informational Submittal
1. Certificates
   a The generator set shall be listed to UL 2200 or submitted to an independent third party certification process to verify compliance as installed.
2. Test and Evaluation Reports

C Closeout Submittal
1. Maintenance Contracts
2. Operation And Maintenance Data
3. Warranty Documentation
4. Record Documentation

1.3 Quality Assurance

A Regulatory Agency
1. The generator set shall conform to the requirements of the following codes and standards:

a CSA C22.2, No. 14-M91 Industrial Control Equipment.
b EN50082-2, Electromagnetic Compatibility-Generic Immunity Requirements, Part 2: Industrial.
c EN55011, Limits and Methods of Measurement of Radio Interference Characteristics of Industrial, Scientific and Medical Equipment.
d IEC8528 part 4, Control Systems for Generator Sets.
e IEC Std 61000-2 and 61000-3 for susceptibility, 61000-6 radiated and conducted electromagnetic emissions.
f IEEE446 Recommended Practice for Emergency and Standby Power Systems for Commercial and Industrial Applications.
g NFPA 70, National Electrical Code, Equipment shall be suitable for use in systems in compliance to Article 700, 701, and 702.
h NFPA 99, Essential Electrical Systems for Health Care Facilities.
i NFPA 110, Emergency and Standby Power Systems. The generator set shall meet all requirements for Level 1 systems. Level 1 prototype tests required by this standard shall have been performed on a complete and functional unit. Component level type tests will not substitute for this requirement.

2. Qualifications
   a The equipment shall be produced by a manufacturer who is ISO 9001 certified for the design, development, production and service of its complete product line.
   b The power system shall be produced by a manufacturer who has produced this type of equipment for a period of at least 10 years and who maintains a service organization available twenty-four hours a day throughout the year.
3. Manufacturers
   a The power system shall be furnished by a single manufacturer who shall be responsible for the design, coordination, and testing of the complete system. The entire system shall be installed as shown on the plans, drawings, and specifications herein.
   b The basis of design is a Kohler model 1750REOZMD. If the supplier wishes to propose equivalent equipment as manufactured by Caterpillar, all additional costs associated with re-engineering and mechanical & electrical modifications to the installation will be at the contractor's expense. The contractor must also supply the details below with his proposal:

- • A line-by-line clarification of the specification marked with "D" for deviation; "E" for exception, and "C" for comply.
- • The weight & outline dimensions of the proposed equipment.

Upon request, the manufacturer shall provide a notarized letter certifying compliance with all of the requirements of this specification. No exceptions to the specifications shall be allowed or included in the certification.

1.4 Warranty

A. Manufacturer's Warranty
1. The generator set shall include a standard warranty covering one (1) year or 2000 hours, whichever occurs first, to guarantee against defective material and workmanship in accordance with the manufacturer's published warranty from the date of initial startup.
2. The generator set manufacturer and its distributor shall maintain a 24-hour parts and service organization. This organization shall regularly engage in maintenance contract programs to perform preventive maintenance and service on equipment similar to that specified. A service agreement shall be available and shall include system operation under simulated operating conditions; adjustment to the generator set, transfer switch, and switchgear controls as required, and certification in the owner's maintenance log of repairs made and functional tests performed on all systems.

PART 2 PRODUCTS

2.1 Equipment

A Equipment

1. The generator set shall be a Kohler model 1750REOZMD with a 7M4056 alternator. It shall provide 2188 kVA and 1750 kW when operating at 277/480 volts, 60 Hz, 0.80 power factor. The generator set shall be capable of a 130°C Standby rating while operating in an ambient condition of less than or equal to 77 °F and a maximum elevation of 500 ft above sea level. The standby rating shall be available for the duration of the outage.

B Engine

1. The minimum 65.4 liter displacement engine shall deliver a minimum of 2923 HP at a governed engine speed of 1800 rpm, and shall be equipped with the following:
    a. Electronic isochronous governor capable of 0.25% steady-state frequency regulation
    b. 24-volt positive-engagement solenoid shift-starting motor
    c. 30-ampere automatic battery charging alternator with a solid-state voltage regulation
    d. Positive displacement, full-pressure lubrication oil pump, cartridge oil filters, dipstick, and oil drain
    e. Dry-type replaceable air cleaner elements for normal applications
    f. Engine-driven or electric fuel-transfer pump including fuel filter and electric solenoid fuel shutoff valve capable of lifting fuel
    g. The turbocharged engine shall be fueled by diesel
    h. The engine shall have a minimum of 4 cylinders and be liquid-cooled
2. The engine shall be EPA certified from the factory
3. The generator must accept rated load in one-step.

C Cooling System

1. The engine shall be liquid-cooled by a closed loop, unit mounted radiator rated to operate the generator set at full load at an ambient temperature of 50 degrees C (122 degrees F). The radiator fan and other rotating engine parts shall be guarded against accidental contact.

D Standard Air Cleaner

1. The air cleaner shall provide engine air filtration which meets the engine manufacturer's specifications under typical operating conditions.

E Battery

1. Each genset requires a maintenance free battery which must meet the engine manufactures' specifications for the ambient conditions specified in Part 1 Project Conditions and shall comply with the NFPA requirements for engine cranking cycles. This battery shall be rated according to SAE Standards J-537 with a minimum cold cranking amp of 1150 amps and a minimum reserve capacity of 120 Minutes at 80F. The battery plates shall be constructed of a Calcium-Lead alloy to provide long waterless operation and extended battery life. The battery must contain a handle to aid in lifting and the case must be constructed of polypropylene to resist breakage and extend service life.
2. Battery rack and battery cables capable of holding the manufacturer's recommended batteries shall be supplied.

F Housing

1. Level 2 Sound Attenuated Enclosure

a The generator set shall be supplied with a Sound Attenuated Enclosure, providing a sound pressure of 80.5 dB(A) while the generator is operating at 100% load at 7 meters (23 feet) – free field – using acoustic insulation and acoustic-lined inlet hoods, constructed from a minimum of 0.125 inch thick formed heavy duty aluminum panels. The acoustic insulation used shall meet

UL 94 HF1 flammability classification. The enclosure shall be manufactured from bolted panels to facilitate service, future modifications, or field replacement. The enclosure shall use external vertical air inlet and outlet hoods with 90 degree angles to discharge air up and reduce noise. The enclosure shall have an integral rodent guard and skid end caps and shall have bracing to meet 241 kph (150 mph) wind loading.

b The enclosure components and skid shall be cleaned with a two-stage alkaline cleaning process to remove grease, grit, and grime from parts. Components shall then be subjected to a Zirconium-based conversion coating process to prepare the metal for electrocoat (e-coat) adhesion. All enclosure parts shall receive an 100% epoxy primer electrocoat (e-coat) with high-edge protection. Following the e-coat process, the parts shall be finish coated with powder baked paint for superior finish, durability, and appearance with a Power ArmorTM industrial finish that provides heavy duty durability in harsh conditions, and is fade-, scratch- and corrosion-resistant.

c The enclosure must surpass a 3,000 hour salt spray corrosion test per ASTM B-1117.

d Enclosures will be finished in the manufacturer's standard color.

e The enclosures shall allow the generator set to operate at full load in an ambient temperature of 50°C with no additional derating of the electrical output of the generator set.

f Enclosures shall be equipped with sufficient side and end doors to allow access for operation, inspection, and service of the unit and all options. Minimum requirements are two doors per side. When the generator set controller faces the rear of the generator set, an additional rear facing door is required. Access to the controller and main line circuit breaker shall meet the requirements of the National Electric Code.

g Doors shall be fitted with hinges, hardware, and the doors shall be removable.

h Doors shall be equipped with lockable latches. Locks shall be keyed alike. Door locks shall be recessed to minimize potential of damage to door/enclosure.

i A duct between the radiator and air outlet shall be provided to prevent re-circulation of hot air.

j The complete exhaust system shall be internal to the enclosure.

k The critical silencer shall be fitted with a tailpipe and rain cap.

l The generator set enclosure shall be furnished with the battery charger wired into the load center.

m Basic Electrical Panel –The generator set enclosure shall be furnished with a load center 120/208VAC single phase, 100 amp max w/ main and 12 branch circuits. (1) switch control, (3) AC lights vapor tight and gasketed, and (2) duplex GFI receptacles.

n The generator set enclosure shall be furnished with the block heater wired into the load center.

G Fuel oil storage

1. Double Wall Secondary Containment Sub-base Fuel Tank

a The generator set shall be supplied with a sub-base fuel tank of sufficient capacity to hold a minimum of 24 hours of fuel at 100% loading. No less than 4150 gallons of diesel fuel.

b The sub-base fuel system shall be listed under UL 142, subsection entitled Special Purpose Tanks EFVT category, and will bear their mark of UL Approval according to their particular classification.

c The above ground steel secondary containment rectangular tank for use as a sub base for diesel generators is manufactured and intended to be installed in accordance with the Flammable and Combustible Liquids Code—NFPA 30, the Standard for Installation and Use of Stationary Combustible Engine and Gas Turbines—NFPA 37, and Emergency and Standby Power Systems—NFPA 110.

d The primary tank shall be rectangular in shape and constructed in clam shell fashion to ensure maximum structural integrity and allow the use of a full throat fillet weld.

e Steel Channel Support System. Reinforced steel box channel for generator support, with a load rating of 5,000 Ibs. per generator mounting hole location. Full height gussets at either end of channel and at generator mounting holes shall be utilized.

f Exterior Finish. The sub-base tank exterior finish shall be Power Armor PlusTM, a polyurea-textured rubberized coating.

g Normal venting shall be sized in accordance with the American Petroleum Institute Standard No 2000, Venting Atmospheric and Low Pressure Storage Tanks not less than 1-1/4" (3 cm.) nominal inside diameter.

h The emergency vent opening shall be sized to accommodate the total capacity of both normal and emergency venting and shall be not less than that derived from NFPA 30, table 2-8, and based on the wetted surface area of the tank. The wetted area of the tank shall be calculated on the basis of 100 percent of the primary tank. The vent is to be spring-pressure operated: opening pressure is 0.5/psig and full opening pressure is 2.5 psig. The emergency relief vent is to be sized to accommodate the total venting capacity of both normal and emergency vents.

i There shall be a 2" NPT opening within the primary tank and lockable manual fill cap.

j A direct reading, UL listed, magnetic fuel level gauge with a hermetically sealed, vacuum tested dial, to eliminate fogging, shall be provided.

k A float switch for remote or local annunciation of a (50% standard) low fuel level condition shall be supplied.

H Controller

1. Advanced Power Management 603 (APM603) Generator Set Controller
   a. The generator set controller shall be a microprocessor-based control system that will provide automatic starting, system monitoring, and protection.
   b. The controller shall be mounted on the generator set and shall have integral vibration isolation. The controller shall be prototype and reliability tested to ensure operation in the conditions encountered.
2. Codes and Standards
   a. The generator set controller shall meet NFPA 110 Level 1 requirements and shall include an integral alarm horn as required by NFPA.
   b. The controller shall meet NFPA 99 and NEC requirements.
   c. The controller shall be UL 6200 recognized.
   d. The controller shall meet ASTM B117 (salt spray test).
3. Applicability
   a. The controller shall be a standard offering in the manufacturer's controller product line.
   b. The controller's environmental specification shall be: -40°C to 70°C operating temperature range and 5-95% humidity, non-condensing.
   c. The controller front face shall meet an environmental rating of IP65 when mounted properly on the generator.
4. Controller Buttons, Display, and Components
   a. The generator set controller shall include the following features and functions:
      1 Master Control Push Buttons – the buttons shall be tactile-feel membrane with an indicator light to initiate the following functions:
         1. Run Mode – when in Run mode the generator set shall start.
         2. Off/Reset Mode – when in Off/Reset mode, the generator set shall not accept any remote start commands and shall be capable of resetting all faults, allowing for the restarting of the generator set after a shutdown.
         3. Auto Mode – when in Auto mode, the generator set shall be ready to accept a signal from a remote device.
      2 Control Panel shall include:
         1. Emergency Stop Switch – the latch type stop switch shall be red in color with a “mushroom” type head. Depressing the stop button will immediately stop the generator set and lockout the generator set for any automatic remote starting.
      3 Display – the display shall be a 7.5” TFT color touchscreen.
      4 Fault Light – the controller shall have an annunciator fault light that glows red for

faults and yellow for warnings. The warning light will also illuminate when not in Auto.

5 Alarm Horn – the controller shall provide an alarm horn that sounds when any faults or warnings are present. The horn shall also sound when the controller is not in the Auto mode.

6 Alarm Silence/Lamp Test Button – when this button is held, it shall test all controller lamps. This button will also silence the alarm horn when the unit is not Auto or has a fault.

7 USB Connection – the controller shall have a USB connection port for a storage device that is accessible on the front of the control panel without having to open any electrical enclosure panels on the generator. This connection shall allow for updating of all software and firmware. This connection shall allow for downloading of controller parameter settings and the event log. This connection shall allow for data logging storage. This connection shall allow the ability to capture screenshots.

8 Mini-USB Connection – the controller shall have a mini-USB connection port for a PC connection that is accessible on the front of the control panel without having to open any electrical enclosure panels on the generator. This connection shall allow a certified technician to service the generator controller using a dedicated PC program. The program shall allow for servicing of generator set parameters, faults diagnostics and viewing of controller information. The program shall allow for uploading of software and firmware as well as downloading of parameter settings and the event log.

5. The controller shall have three user level access
    a. User Level – no password required, and user can view all metered values and settings
    b. Operator Level – password required to adjust settings that do not impact the generator
    c. Technician Level – password required to adjust all settings
6. Overview and Favorites
    a. Overview – User shall be able to customize up to 16 gauges for a personalized Home screen that will allow for immediate access to site specific critical data.
    b. Favorites – User shall be able to create their own menu set up with parameters for easy viewing.
7. Load Management
    a. Programmable outputs included to command the connect and disconnect of loads based on generator or paralleling system state:
        1 Under frequency
        2 Start up
        3 Generators online
        4 Priority demands
    b. Supports up to 16 loads per system
        1 Can be used on a single generator system
        2 Can be combined in a paralleling system for a total system load control capability
    c. Simplified load management system view from any generator controller in the system
    d. Load control requires the 4 input/15output module (see available options)
8. Controller Engine Control Features and Functions
    a. User-programmable time delay for engine start.
    b. User-programmable time delay engine cool down.
    c. Capability to start and run at user-adjustable idle speed during warm-up for a selectable time-period until engine reaches preprogrammed temperature, or as supported by ECM (Engine Control Module) equipped engine.
    d. The idle function including engine cooldown at idle speed.
    e. Real-time clock and calendar for time stamping of events.
    f. Output with adjustable timer for an ether injection starting system.
    g. Programmable cyclic cranking that can adjust on time, off time, and number of cycles.
9. Controller Alternator Control Features and Functions

a. Patented High-speed RMS Digital Voltage Regulation – the system shall have integral microprocessor-based voltage regulator system that provides +/- 0.25% voltage regulation no-load to full load with three phase sensing. A separate voltage regulator is not acceptable. The digital voltage regulator shall be applicable to single- or three-phase systems. The system shall be prototype tested and control variation of voltage to frequency. The voltage regulator shall be adjustable at the controller with maximum +/-10% adjustable of nominal voltage.
b. Alternator Thermal Overload Protection – the system shall have integral alternator overload and short circuit protection matched to each alternator for the particular voltage and phase configuration.
c. Overcurrent Protective Device– the system shall have a thermal trip, instantaneous trip and maintenance mode per NEC240.87.

10. Other Control Features and Functions
    a. Event Logging – the controller keeps a record of up to 3,000 events with date and time locally for warning and shutdown faults. This event log can be downloaded onto a USB storage device or onto a PC through the service program.
        1 Event Snapshot – the control system shall capture 15 seconds of critical data around the time a fault or warning. This data shall be viewable on the controller and downloadable.
    b. Data Logging – the controller shall allow customized parameters to be logged based on a start trigger from the controller interface.
        1 The parameters are selectable from all monitored parameters.
        2 The sample period shall be configurable from 1 second to 2 hours.
        3 The collected data shall be stored on the controller or on a USB storage device plugged into the control panel.
        4 The collected data shall be displayed on the screen and available for analysis.
11. Control Monitoring Requirements
    a. The generator set shall have alarms and status indication lamps that show non-automatic status, warning, and shutdown conditions. The controller shall indicate with a warning lamp and or alarm and on the digital display screen any shutdown, warning, or engine fault condition that exists in the generator set system. The following alarms and shutdowns shall exist as a minimum:
        1 All monitored functions must be viewable on the control panel display
        2 The following generator set functions shall be monitored:
            1. All output voltages - single phase, three phase, line to line, and line to neutral, 0.25% accuracy
            2. All single phase and three phase currents, 0.25% accuracy
            3. Output frequency, 0.25% accuracy
            4. Power factor by phase with leading/lagging indication
            5. Total instantaneous kilowatt loading and kilowatts per phase, 0.5% accuracy
            6. kVARS total and per phase, 0.5% accuracy
            7. kVA total and per phase, 0.5% accuracy
            8. kW hours
            9. A display of percent generator set duty level (actual kW loading divided by the kW rating)
        3 Engine parameters listed below shall be monitored: (*are adjustable)
            1. Engine Speed*
            2. Oil Pressure
            3. Coolant Temperature
            4. Runtime Hours
            5. Fuel Pressure
            6. Fuel Consumption Rate
        4 Operational records shall be stored in the control beginning at system startup
            1. Total Run Time Hours

2. Total Loaded Hours
3. Total Unloaded Hours
4. Total kW Hours
5. Controller Hours
6. Controller Run Time Hours
7. ECM Run Time Hours
8. Number of Starts
9. Number of Crank Attempts
10. Last Crank Duration
11. Last Start Runtime Duration
12. Last Start Time of Day
13. Last Start Date (Day)
14. Last Start Date (Month)
15. Last Start Date (Year)
16. Last Stop Time of Day
17. Last Stop Date (Day)
18. Last Stop Date (Month)
19. Last Stop Date (Year)

5 The following operational records shall be resettable for maintenance purposes:
1. Total Run Time Since Maintenance
2. Loaded Hours Since Maintenance
3. Unloaded Hours Since Maintenance
4. kW Hours Since Maintenance
5. Reset Maintenance Records

6 For maintenance and service purposes, the controller shall store and display on demand the information:
1. Generator Model
2. Generator Serial Number
3. ECM Serial Number
4. Alternator Part Number
5. Engine Model Number
6. Engine Serial Number
7. Controller Serial Number
8. Firmware Version

7 The controller shall support a variety of maintenance parameters including:
1. Last Start Time o Day
2. ScreenshotCount
3. ECM Runtime Hours
4. Controller Runtime Hours
5. Last Stop Date (Month)
6. Last Start Time of Day
7. Last Stop Date (Day)
8. Last Start Date (Day)
9. Number of Starts
10. Last Stop Time of Day
11. Last Stop Time of Day
12. Controller Hours
13. Number of Crank Attempts
14. Last Crank Duration
15. Last Start Runtime Duration
16. Last Start Time of Day
17. Last Start Time of Day
18. Last Start Date (Month)
19. Last Start Date (Year)

20. Last Stop Time of Day
21. Last Stop Time of Day
22. Last Stop Date (Year)

12. Generator Set Warning, Shutdown Alarm and Status
    a. The generator set shall have alarms and status indication lamps that show Non-Automatic Status, Warning, and Shutdown conditions. The controller shall indicate with a warning lamp and/or alarm, and on the digital display screen any shutdown, warning, or engine fault condition that exists in the generator set system. The following alarms and shutdowns shall exist as a minimum:
        1 OverCrank Shutdown
        2 UnderFrequency Shutdown
        3 OverFrequency Shutdown
        4 OverPower Shutdown
        5 Low Oil Pressure Shutdown
        6 High Coolant Temperature Shutdown
        7 Local Emergency Stop Shutdown
        8 Remote Emergency Stop Shutdown
        9 OverSpeed Shutdown
        10 Loss ECM Comms Shutdown
        11 ECM Mismatch Shutdown
        12 High Oil Temperature Shutdown
        13 Alternator Protection Shutdown
        14 Protective Relay Shutdown OverPower
        15 Protective Relay Shutdown OverCurrent
        16 Protective Relay Shutdown Reverse VAR
        17 Protective Relay Shutdown ReversePower
        18 UnderVoltage Shutdown (L-L, L-N, each phase)
        19 OverVoltage Shutdown (L-L, L-N, each phase)
        20 OverCurrent Shutdown
        21 Excitation Overvoltage Shutdown
        22 Low Fuel Level Shutdown
        23 Low Coolant Level Shutdown
        24 Generator Over Power Shutdown
    b. Conditions resulting in generator warning (generator will continue to operate):
        1 UnderFrequency Warning
        2 OverFrequency Warning
        3 OverPower Warning
        4 Low Oil Pressure Warning
        5 Low Coolant Temperature Warning
        6 High Coolant Temperature Warning
        7 Low Battery Voltage Warning
        8 High Battery Voltage Warning
        9 Battery Charger Fault Warning
        10 High Oil Temperature Warning
        11 GFCI Warning
        12 UnderVoltage Warning (L-L, L-N, each phase)
        13 Overvoltage Warning (L-L, L-N, each phase)
        14 OverCurrent Warning
        15 High Fuel Level Warning
        16 Low Fuel Level Warning
        17 Critically Low Fuel Level Warning
        18 Generator Over Power Warning

13. Inputs and Outputs
    a. Standard Dedicated User Inputs – the controller shall have dedicated inputs for:

1 Two-Wire Input
1. Remote Engine Start
2 Digital Input
1. Auxiliary Fault (Shutdown)
2. Auxiliary Warning
3. Battery Charger Fault
4. Breaker Close
5. Breaker Trip
6. Coolant Temperature
7. Excitation Over Voltage
8. Fuel Level
9. Fuel Leak Alarm
10. Low Fuel Level Switch
11. Ground Fault Relay
12. Remote Emergency Stop
13. Local Emergency Stop
3 Analog Voltage Input – Scalable Up To +- 10 VDC
1. Speed Bias
2. Voltage Bias

b. Standard Dedicated User Outputs – the controller shall have dedicated inputs for:
1 Relay Driver Output
1. Run
2. Crank
3. Horn
4. Common Failure
5. Common Warning
6. High Coolant Temperature
7. Close Breaker
8. Trip Breaker

c. Optional Configurable User Inputs and Outputs
1 User Configurable Inputs
1. 2 Analog, 0-5 VDC
2. 4 Dry Contact Digital
2 User Configurable Relay Outputs
1. 14 NO/NC Relays
2. 1 Common Fault Relay

d. PLC-like capability for applying logic to customize generator system behavior.

14. Communications
a. CAN
1 If the generator set engine is equipped with an ECM, the controller shall communicate with the ECM for control, monitoring, diagnosis, and meet SAE J1939 standards.

b. Modbus®
1 Non-isolated for RSA III
2 Isolated for Modbus devices
3 Isolated for paralleling communication
4 RJ45 for Modbus TCP, SNMP, and BACnet

c. Simple Network Management Protocol (SNMP)
1 Industry standard SNMP communication shall be available.
2 The controller shall support SNMP communication via an RJ-45 Ethernet connection.

d. BACnet®
1 Industry standard BACnet® communication shall be available.
2 The controller shall support BACnet® communication via an RJ-45 Ethernet

connection.

e. Communication Connections
    1 All communication connections shall be accessible in a dedicated customer connection area that is separated from factory wiring into the controller to prevent field connections from interfering with factory wiring.
    2 The controller shall not require any additional hardware to support Modbus®, SNMP or BACnet® communication.

15. Paralleling
    a. The controller shall be capable of paralleling with other generators with the same controller through a dedicated communication network between the controllers and onboard paralleling capabilities.
    b. The controller shall support paralleling up to eight generators on a common bus.
    c. The controller shall support paralleling a single generator with utility using kW, kVAR, and Power Factor settings.
    d. Synchronization
        1 The controller shall support onboard synchronization to allow matching of voltage, frequency and phase before closing a circuit breaker or contactor to connect the generator to the bus.
        2 The controller shall use first-on logic to determine which generator will close to the dead bus first.
        3 The controller shall support 3 common forms of synchronizing, Automatic (synch and close breaker), Sync-check (synch-no closure) and Permissive (no active synch, allow manual close if in synch).
        4 The controller shall announce a fail to synch fault when synchronization is not achieved within the programmed time delay.
        5 The controller shall actively maintain synchronizing efforts to achieve synchronization even after the time delay has expired.
        6 The controller shall be capable of actively displaying the synchronizing parameter values for both the generator and the bus when synchronizing; voltage, frequency and phase.
        7 The controller shall be capable of displaying the phase rotation (ABC or CBA) for both the generator and the bus and prevent closure to the bus when phase rotation does not match the generator.
    e. Load Sharing
        1 The controller shall actively share real and reactive power amongst all generators on the common bus, on a per-unit or percentage basis.
        2 The controller shall support soft load and unload of the generator.
        3 The controller shall be capable of operating with droop control.
    f. Circuit Breaker/Contactor Control
        1 The controller shall be capable of operating a circuit breaker or contactor to apply electricity to the parallel electrical bus.
        2 The controller system shall have a normally closed contact (fail safe) that will keep the breaker tripped until such conditions are met to allow closure.
        3 The controller system shall have a normally open contact to provide an energizing signal to close the circuit breaker.
        4 The controller system shall have normally open contact for control of a contactor.
        5 The controller will announce a Fail to Close warning when closure is not detected after 1 closure attempt.
        6 The controller will announce a First on Fail warning when closure is not detected after 1 closure attempt when closing to a dead bus.
        7 The controller will announce a Close Attempts Fault when the number of attempts exceeds the setting (max attempts).
        8 The controller will monitor current to detect a failure to open the generator circuit breaker.

9 The controller will keep the generator running until the generator circuit breaker is seen open in order to keep the bus live to prevent other devices from closing to this bus without synchronizing.

16. Generator Management
    a. Allows the start and stop of generators based on load demand or state of other generators including:
        1. Start Power
        2. Stop Power
        3. Start Accumulator
        4. Stop Accumulator
        5. Total Online Capacity
        6. Total Available Capacity
        7. Total Bus Power
        8. Total Bus Capacity
        9. Negotiated Order
        10. Stopped by Gen Management
        11. Start Command
    b. The controller shall have a programmable disconnect point (kW) below which point the controller shall automatically trip the generator circuit breaker.
17. Protective Relays
    a. The controller shall provide a standard set of protective relay functions with programmable limits and time delays
        1 Over Voltage (59)
            1. User adjustable range – 100% to 130%
            2. User adjustable range time delay – 0 to 120 seconds
        2 Under Voltage (27)
            1. User adjustable range – 70% to 100%
            2. User adjustable time delay – 0 to 120 seconds
        3 Over Frequency (81O)
            1. User adjustable range – 100% to 140%
            2. User adjustable time delay – 0 to 120 seconds
        4 Reverse Power (32R)
            1. User adjustable range – 0% to 50%
            2. User adjustable time delay – 0 to 120 seconds
        5 Over Power (32O)
            1. User adjustable range – 90% to 150%
            2. User adjustable time delay – 0 to 120 seconds
        6 Loss of Field (40 Reverse VARS)
            1. User adjustable range – 10% to 100%
            2. User adjustable time delays – 0 to 120 seconds
        7 Over Current with Voltage Range
            1. User adjustable range – 100% to 200%
            2. User adjustable time delay – 0 to 120 seconds

I Generator Overcurrent and Fault Protection

1. The generator shall be provided with a factory installed, 100% rated line circuit breaker rated at 3000 amperes that is UL489 listed. Line circuit breakers shall be sized for the rated ampacity of the loads served by the breaker per the NEC.
2. The circuit breaker(s) shall incorporate an electronic trip unit.
3. When GFI is required per the NEC, additional neutrals shall be factory installed, and the alarm indication shall be integrated with the other generator-set alarms.
4. Barriers to provide segregation of wiring from an emergency source to emergency loads from all other wiring and equipment, if required by the NEC, shall be provided.

J Alternator

1. The alternator shall be salient-pole, brushless, 2/3-pitch, with 4 bus bar provision for external connections, self-ventilated, with drip-proof construction and amortisseur rotor windings, and skewed for smooth voltage waveform. The ratings shall meet the NEMA standard (MG1-32.40) temperature rise limits. The insulation shall be class H per UL1446 and the varnish shall be a vacuum pressure impregnated, fungus resistant epoxy. Temperature rise of the rotor and stator shall be limited to 130°C Standby. The PMG based excitation system shall be of brushless construction controlled by a digital, three phase sensing, solid- state, voltage regulator. The AVR shall be capable of proper operation under severe nonlinear loads and provide individual adjustments for voltage range, stability and volts-per-hertz operations. The AVR shall be protected from the environment by conformal coating. The waveform harmonic distortion shall not exceed 5% total RMS measured line-to-line at full rated load. The TIF factor shall not exceed 50.
2. The alternator shall have a maintenance-free bearing, designed for 40000 hour B10 life. The alternator shall be directly connected to the flywheel housing with a semi-flexible coupling between the rotor and the flywheel.
3. The generator shall be inherently capable of sustaining at least 300% of rated current for at least 10 seconds under a 3-phase symmetrical short circuit without the addition of separate current-support devices.
4. Motor starting performance and voltage dip determinations shall be based on the complete generator set. The generator set shall be capable of supplying 7200 LRKVA for starting motor loads with a maximum instantaneous voltage dip of 35%, as measured by a digital RMS transient recorder in accordance with IEEE Standard 115. Motor starting performance and voltage dip determination that does not account for all components affecting total voltage dip, i.e., engine, alternator, voltage regulator, and governor will not be acceptable. As such, the generator set shall be prototype tested to optimize and determine performance as a generator set system.

K Vibration Isolation

1. Vibration isolators shall be provided between the engine-alternator and heavy-duty steel base.

2.2 Accessories

A. The generator set shall be supplied with a 10-ampere automatic float/equalize battery charger capable of charging both lead-acid and ni-cad type batteries, with the following features:
   i. Automatic 3-stage float to equalization charge
   ii. Voltage regulation of 1% from no to full load over 10% AC input line voltage variations
   iii. Battery charging current Ammeter and battery voltage voltmeter with 5% full-scale accuracy
   iv. LED lamp for power ON indication
   v. Current limited during engine cranking, short circuit, and reverse polarity conditions
   vi. Temperature compensated for ambient temperatures for -40°C to 60°C
   vii. Alarm circuit board featuring alarm contacts for low battery voltage, high battery voltage, and battery charger malfunction.
   viii. UL 1012 Listed
   ix. CSA Certified
B. Battery rack and battery cables capable of holding the manufacturer's recommended batteries shall be supplied.
C. The air cleaner restriction indicator shall indicate the need for maintenance of the air cleaners.
D. The generator set shall be furnished with rodent guards to prevent rodent intrusion and protect internal components.
E. The generator set shall be supplied with a common failure relay to provide means of signaling fault and/or shutdown conditions.
   i. The common failure relay shall remotely signal auxiliary faults, emergency stop, high engine temperature, low oil pressure, overcrank, and over speed via one single-pole, double-throw relay with 10 amps at 120 VAC contacts.

ii. The relay contacts shall be gold flashed to allow use of low current draw devices (100ma @ 28VDC min.).
iii. Once energized the relay shall remain latched until the system is reset by the main controller switch.

F. The generator set shall be provided with a run relay which shall provide a three-pole, double-throw relay with 10-amp/ 250 VAC contacts to indicate that the generator is running. The run relay dry contacts can be used for energizing or de-energizing customer devices while the generator is running (e.g. louvers, indicator lamps, etc.)

G. 10-Relay Dry Contact Kit. The controller shall be provided with a 10-Relay dry contact kit with ten programmable for-C contact for remote indication of digital conditions and alarms.

H. The exhaust piping shall be gas proof, seamless, stainless steel, flexible exhaust bellows and includes the flex exhaust tube and the mounting hardware.

I. Block Heater - The block heater shall be thermostatically controlled, 9,000 watt, 208 VAC - single phase, to maintain manufacturers recommended engine coolant temperature to meet the start-up requirements of NFPA 99 and NFPA 110, Level 1.

J. Supply flexible fuel lines to provide a flexible connection between the engine fuel fittings and the fuel supply tank piping and for the fuel return lines from the injector pump per engine manufacturer's recommendations. Flex line shall have a protective steel wire braid to protect the hose from abrasion.

2.3 Source Quality Control

A. Non-Conforming Work

1. To ensure that the equipment has been designed and built to the highest reliability and quality standards, the manufacturer and/or local representative shall be responsible for three separate tests: design prototype tests, final production tests, and site tests.

a. **Design Prototype Tests.** Components of the emergency system, such as the engine/generator set, transfer switch, and accessories, shall not be subjected to prototype tests because the tests are potentially damaging. Rather, similar design prototypes and preproduction models shall be subject to the following tests:

i. Maximum power (kW)
ii. Maximum motor starting (kVA) at 35% instantaneous voltage dip.
iii. Alternator temperature rise by embedded thermocouple and/or by resistance method per NEMA MG1-32.6.
iv. Governor speed regulation under steady-state and transient conditions.
v. Voltage regulation and generator transient response.
vi. Harmonic analysis, voltage waveform deviation, and telephone influence factor.
vii. Three-phase short circuit tests.
viii. Alternator cooling air flow.
ix. Torsional analysis to verify that the generator set is free of harmful torsional stresses.
x. Endurance testing.

b. **Final Production Tests.** Each generator set shall be tested under varying loads with guards and exhaust system in place. Tests shall include:

i. Single-step load pickup
ii. Safety shutdown device testing
iii. Rated Power @ 0.8 PF
iv. Maximum power
v. Upon request, a witness test, or a certified test record sent prior to shipment.

c. **Site Tests.** The manufacturer's distribution representative shall perform an installation check, startup, and building load test. The engineer, regular operators, and the maintenance staff shall

be notified of the time and date of the site test. The tests shall include:

i. Fuel, lubricating oil, and antifreeze shall be checked for conformity to the manufacturer's recommendations, under the environmental conditions present and expected.

ii. Accessories that normally function while the set is standing by shall be checked prior to cranking the engine. These shall include: block heaters, battery chargers, alternator strip heaters, remote annunciators, etc.

iii. Generator set startup under test mode to check for exhaust leaks, path of exhaust gases outside the building, cooling air flow, movement during starting and stopping, vibration during operation, normal and emergency line-to-line voltage and frequency, and phase rotation.

iv. Automatic start by means of a simulated power outage to test remote-automatic starting, transfer of the load, and automatic shutdown. Prior to this test, all transfer switch timers shall be adjusted for proper system coordination. Engine coolant temperature, oil pressure, and battery charge level along with generator set voltage, amperes, and frequency shall be monitored throughout the test.

v. Load bank testing. The test shall consist of four hours of continuous operation using a portable resistive load bank. Adjust the load bank load to provide one half hour each at zero load, 25 percent, 50 percent, and 75 percent of full load. Followed by two hours of operation at rated standby load. Furnish the portable load bank, all connecting cables, metering equipment, and other equipment or devices required to perform the on-site testing. During the test, readings shall be taken every 15 minutes showing % load, voltage, amps, oil pressure, water temperature, and battery charge.

END OF SECTION

THIS PAGE INTENTIONALLY LEFT BLANK FOR DOUBLE SIDED PRINTING

SECTION 263213.3
AUTOMATIC TRANSFER SWITCH

PART 1 GENERAL

1.1 Summary

A This section includes the following items from a single supplier:
1. Automatic transfer switch
2. Related Accessories as specified

B Related Requirements
1. It is the intent of this specification to secure an automatic transfer switch that has been prototype tested, factory built, production-tested, and site-tested together with all accessories necessary for a complete installation as shown on the plans and drawings and specified herein.
2. Any exceptions to the published specifications shall be subject to the approval of the engineer and submitted minimum 10 days prior to the closing of the bid with a line by line summary description of all the items of compliance, any items that have been are omitted or have been taken exception to, and a complete description of all deviations.
3. It is the intent of this specification to secure an automatic transfer switch that has been tested during design verification, in production, and at the final job site. The automatic transfer switch will be a commercial design and will be complete with all of the necessary accessories for complete installation as shown on the plans, drawings, and specifications herein. The equipment supplied shall meet the requirements of the National Electrical Code and applicable local codes and regulations.
4. All equipment shall be new and of current production by an international, power system manufacturer of generators, transfer switches, and paralleling switchgear. The manufacturer shall be a supplier of a complete and coordinated system. There will be single-source responsibility for warranty, parts, and service through a factory-authorized representative with factory-trained technicians.

1.2 Submittals

A Action Submittals
1. Product Data
   a The submittal shall include specification sheets showing all standard and optional accessories to be supplied; schematic wiring diagrams, dimension drawings, and interconnection diagrams identifying by terminal number each required interconnection between the generator set, the transfer switch, and the remote annunciator panel if it is included elsewhere in these specifications.

B Closeout Submittals
1. Operation And Maintenance Data
2. Warranty Documentation

1.3 Quality Assurance

A Regulatory Agency
1. The automatic transfer switch shall conform to the requirements of the following codes and standards:
   a UL 1008 - Standard for Transfer Switch Equipment
   b IEC 947-6-1 Low-voltage Switchgear and Control gear; Multifunction equipment; Automatic Transfer Switching EquipmentEN55011, Limits and Methods of Measurement of Radio Interference Characteristics of Industrial, Scientific and Medical Equipment.
   c NFPA 70 - National Electrical Code

d NFPA 99 - Essential Electrical Systems for Health Care Facilities
e NFPA 110 - Emergency and Standby Power Systems
f IEEE Standard 446 - IEEE Recommended Practice for Emergency and Standby Power Systems for Commercial and Industrial Applications
g NEMA Standard ICS 10-2005, Electromechanical AC Transfer Switch Equipment.
h EN61000-4-4 Fast Transient Immunity Severity Level 4
i EN61000-4-5 Surge Immunity Class 4 (voltage sensing and programmable inputs only)
j IEEE 472 (ANSI C37.90A) Ring Wave Test
k IEC Specifications for EMI/EMC Immunity (CISPR 11, IEC 1000-4-2, IEC 1000-4-3, IEC 1000-4-4, IEC 1000-4-5, IEC 1000-4-6, IEC 1000-4-8, IEC 1000-4-11)
l CSA C22.2 No. 178 certification

2. Qualifications
   a The automatic transfer switch shall be produced by a manufacturer who is ISO 9001 certified for the design, development, production and service of its complete product line.
   b A manufacturer who has produced this type of equipment for a period of at least 10 years and who maintains a service organization available twenty-four hours a day throughout the year shall produce the automatic transfer switch.

3. Manufacturers
   a The automatic transfer switch shall be furnished by a single manufacturer who shall be responsible for the design, coordination, and testing of the complete system. The entire system shall be installed as shown on the plans, drawings, and specifications herein.
   b The manufacturer shall maintain a national service organization of employing personnel located throughout the contiguous United States. The Service center's personnel must be factory trained and must be on call 24 hours a day, 365 days a year.
   c The manufacturer shall maintain records of each switch, by serial number, for a minimum of 20 years.
   d The basis of design is a Kohler model KCP-AMTC-0150S. If the supplier wishes to propose equivalent equipment as manufactured by Russelectric, all additional costs associated with re-engineering and mechanical & electrical modifications to the installation will be at the contractor's expense. The contractor must also supply the details below with his proposal:
      - A line-by-line clarification of the specification marked with "D" for deviation; "E" for exception, and "C" for comply.
      - The weight & outline dimensions of the proposed equipment.
   e Upon request, the manufacturer shall provide a notarized letter certifying compliance with all of the requirements of this specification. No exceptions to the specifications shall be allowed or included in the certification.

1.4 Warranty or Bond

A Manufacturer's Warranty

1. The ATS shall include a standard warranty covering one (1) year, to guarantee against defective material and workmanship in accordance with the manufacturer's published warranty from the date of initial startup.
2. The ATS manufacturer and its distributor shall maintain a 24-hour parts and service organization. This organization shall regularly engage in maintenance contract programs to perform preventive maintenance and service on equipment similar to that specified. A service agreement shall be available and shall include system operation under simulated operating conditions; adjustment to the generator set, transfer switch, and switchgear controls as required, and certification in the owner's maintenance log of repairs made and functional tests performed

on all systems.

PART 2 PRODUCTS

2.1 Equipment

A Equipment

1. Furnish and install an automatic transfer switches system(s) with 3-Pole/4-Wire, Solid Neutral, 150 Amps, 480V/60Hz. Each automatic transfer shall consist of an inherently double throw power transfer switch mechanism and a microprocessor controller to provide automatic operation. All transfer switches and controllers shall be the products of the same manufacturer.

B Manufacturer

1. Automatic transfer switches shall be Kohler Any Breaker Rated - Programmed Transition KCP-AMTC-0150S. Any alternate shall be submitted for approval to the consulting engineer at least 10 days prior to bid date.

C Construction

1. The transfer switch shall be electrically operated and mechanically held with double throw construction, and operated by a momentarily energized solenoid-driven mechanism.
2. All transfer switch sizes shall use only one type of main operator for ease of maintenance and commonality of parts.
3. The switch shall be positively locked and unaffected by momentarily outages, so that contact pressure is maintained at a constant value and contact temperature rise is minimized for maximum reliability and operating life.
4. All main contacts shall be silver composition. Switches rated 600 amperes and above shall have segmented, blow-on construction for high withstand and close-on capability and be protected by separate arcing contacts.
5. Inspection of all contacts shall be possible from the front of the switch without disassembly of operating linkages and without disconnection of power conductors. Switches rated 800 amperes and higher shall have front removable and replaceable contacts. All stationary and moveable contacts shall be replaceable without removing power conductors and/or bus bars.
6. Designs utilizing components of molded-case circuit breakers, contactors, or parts thereof, which are not intended for continuous duty, repetitive switching or transfer between two active power sources, are not acceptable.
7. For two and three pole switches, where neutral conductors are to be solidly connected as shown on the plans, a neutral conductor plate with fully rated AL-CU pressure connectors shall be provided.
8. For four pole switches with a switching neutral, where neutral conductors must be switched as shown on the plans, the contactor shall be provided with fully rated switched neutral transfer contacts. Overlapping neutral contacts may be used as an alternative.

D Enclosure

3. The ATS shall be furnished in a NEMA 3R enclosure.
4. All standard door mounted switches and indicating LEDs shall be integrated into a flush-mounted, interface membrane or equivalent in the enclosure door for easy viewing & replacement. The panel shall be capable of having a manual locking feature to allow the user to lockout all membrane mounted control switches to prevent unauthorized tampering. This cover shall be mounted with hinges and have a latch that may be padlocked. The membrane panel shall be suitable for mounting by others when furnished on open type units.

2.2 Operation

A Controls

1. A four line, 20 character LCD display and dynamic 4 button keypad shall be an integral part of the controller for viewing all available data and setting desired operational parameters. Operational parameters shall also be available for viewing and control through the communications interface port or USB. The following parameters shall only be adjustable via a password protected programming on the controller:
   a Nominal line voltage and frequency
   b Single or three phase sensing
   c Operating parameter protection
   d Transfer operating mode configuration (Standard transition, Programmed transition, or Closed transition)

B Voltage and Frequency

1. Voltage (all phases) and frequency on both the normal and emergency sources shall be continuously monitored. Voltage on both normal and emergency sources and frequency on the emergency sources shall be adjustable with the following pickup, dropout, and trip setting capabilities (values shown as % of nominal unless otherwise specified):

	Parameter	Dropout/Trip	Pickup/Reset
a	Under voltage	75 to 98%	85 to 100%
b	Over voltage	06 to 135%	95 to 100% of trip
c	Under frequency	95 to 99%	80 to 95%
d	Over frequency	01 to 115%	105 to 120%
e	Voltage unbalance	5 to 20%	3 to 18%

2. Repetitive accuracy of all settings shall be within ± 0.5% over an operating temperature range of -20°C to 70°C.
3. An adjustable dropout time for transient voltage and frequency excursions shall be provided. The time delays shall be 0.1 to 9.9 seconds for voltage and .1 to 15 seconds for frequency.
4. Voltage and frequency settings shall be field adjustable in 1% increments either locally with the display and keypad, remotely via the communications interface port or USB.
5. The controller shall be capable of sensing the phase rotation of both the normal and emergency sources. The source shall be considered unacceptable if the phase rotation is not the preferred rotation selected (ABC or BAC). Unacceptable phase rotation shall be indicated on the LCD; the service required LED and the annunciation through the communication protocol and dry contacts. In addition, the phase rotation sensing shall be capable of being disabled, if required.
6. The controller shall be capable of detecting a single phasing condition of a source, even though a voltage may be regenerated by the load. This condition is a loss of phase and shall be considered a failed source.
7. Source status screens shall be provided for both normal & emergency to provide digital readout of voltage on all 3 phases (phase to phase and phase to neutral), frequency, and phase rotation.

C Time Delays

1. An adjustable time delay of 0 to 6 seconds shall be provided to override momentary normal source outages and delay all transfer and engine starting signals. Capability shall be provided to extend this time delay to 60 minutes by providing an external 12 or 24 VDC power supply.
2. A time delay shall be provided on transfer to the emergency source, adjustable from 0 to 60 minutes, for controlled timing of transfer of loads to emergency.
3. A time delay shall be provided on re-transfer to normal. The time delays shall be adjustable from 0 to 60 minutes. Time delay shall be automatically bypassed if the emergency source fails and the normal source is acceptable.
4. A time delay shall be provided on shut down of engine generator for cool down, adjustable from 0 to 60 minutes.
5. A time delay activated output signal shall also be provided to drive external relay(s) for selective load disconnect and reconnect control. The controller shall be capable of controlling a maximum of 9 individual output time delays to step loads on after a transfer occurs. Each output may be

individually programmed for their own time delay of up to 60 minutes. Each sequence shall be independently programmed for transferring from normal to emergency and transferring from emergency to normal.

6. All time delays shall be adjustable in 1 second increments.
7. All time delays shall be adjustable by using the display and keypad, with a remote device connected to the communications interface port or USB.
8. Each time delay shall be identified and a dynamic countdown shall be shown on the display. Active time delays can be viewed with a remote device connected to the communications interface port or USB.

D Additional Features

1. The controller shall have 3 levels of security. Level 1 shall allow monitoring of settings and parameters only. The Level 1 shall be capable of restricted with the use of a lockable cover. Level 2 shall allow test functions to be performed and Level 3 shall allow setting of all parameters.
2. The display shall provide for the test functions, allowed through password security. The test function shall be load, no load or auto test. The auto test function shall request an elapsed time for test. At the completion of this time delay the test shall be automatically ended and a retransfer sequence shall commence. All loaded tests shall be immediately ended and retransfer shall occur if the emergency source fails and the normal source is acceptable.
3. A contact closure shall be provided for a low-voltage engine start signal. The start signal shall prevent dry cranking of the engine by requiring the generator set to reach proper output, and run for the duration of the cool down setting, regardless of whether the normal source restores before the load is transferred.
4. Auxiliary contacts shall be provided consisting of a minimum of two contacts, closed when the ATS is connected to the normal source and two contacts closed, when the ATS is connected to the emergency source.
5. LED indicating lights shall be provided; one to indicate when the ATS is connected to the normal source (green) and one to indicate when the ATS is connected to the emergency source (red).
6. LED indicating lights shall be provided and energized by controller outputs. The lights shall provide true source availability of the normal (green) and emergency sources (red), as determined by the voltage, frequency and phase rotation sensing trip and reset settings for each source.
7. A membrane switch shall be provided on the membrane panel to test all indicating lights and display when pressed.
8. Provide the ability to select “commit/no commit to transfer" to determine whether the load should be transferred to the emergency generator if the normal source restores before the generator is ready to accept the load.
9. Terminals shall be provided for a remote contact which opens to signal the ATS to transfer to emergency and for remote contacts which closes to inhibit transfer to emergency and/or retransfer to normal. Both of these inhibit signals can be activated through the keypad, communications interface port or USB. A “not-in-auto" LED shall indicate anytime the controller is inhibiting transfer from occurring.
10. The programmed transition feature shall control the transfer so that mechanism is placed in a load disconnect position for an adjustable period of time, giving motor and transformer loads an opportunity to decay to acceptable levels. The programmed transition feature shall be specifically designed for and be the product of the ATS manufacturer. The programmed transition setting shall be capable of being enabled or disabled from the user interface, communications interface port or USB. The controller shall include a built-in time delay for programmed transition operation. This time shall be adjustable from the user interface. The default value shall be 1 second and shall be adjustable from 0 to 60 minutes.
11. A time based load control feature shall be available to allow the prioritized addition and removal of loads based during transfer. This feature may be enabled for either or both sources. The user shall be able to control up to nine loads with independent timing sequences for pre and post transfer delays in either direction of transfer.

12. The controller shall provide 2 inputs for external controls that can be programmed from the following values:
    a Common fault, Remote test, Inhibit transfer, Low battery voltage, Peak shave, Time delay bypass, Load shed forced to OFF position (Programmed transition only)
13. The controller shall provide two form "C" contact outputs rated for up to 12A @ 240VAC or 2A @ 480VAC that can be programmed from the following values:
    a Aux switch open, Transfer switch aux contact fault, Alarm silenced, Alarm active, I/O communication loss, Contactor position, Exercise active, Test mode active, Fail to transfer, Fail to acquire standby source, Source available, Phase rotation error, Not in automatic mode, Common alarm, In phase monitor sync, Load bank control active, Load control active, Maintenance mode active, Non-emergency transfer, Fail to open/close, Loss of phase, Over/under voltage, Over/under frequency, Voltage unbalance, Start signal, Peak shave active, Preferred source supplying load, Standby source supplying load
14. The controller shall be capable of expanding the number of inputs and outputs with additional modules.
15. Optional input/output modules shall be furnished which mount on the inside of the enclosure to facilitate ease of connections.
16. Engine Exerciser - The controller shall provide an internal engine exerciser. The engine exerciser shall allow the user to program up to 21 different exercise routines based on a calendar mode. For each routine, the user shall be able to:
    a Enable or disable the routine
    b Enable or disable transfer of the load during routine.
    c Set the start time, time of day, day of week, week of month (1st, 2nd, 3rd, 4th, alternate or every)
    d Set the duration of the run.
    e At the end of the specified loaded exercise duration the switch shall transfer the load back to normal and run the generator for the specified cool down period. All loaded exercises shall be immediately ended and retransfer shall occur if the standby source fails. The next exercise period shall be displayed on the main screen with the type of exercise, time and date. The type of exercise and the time remaining shall be display when the exercise is active. It shall be possible of ending the exercise event with a single button push.
17. Date and time - The date shall automatically adjust for leap year and the time shall have the capability of automatically adjusting for daylight saving and standard times.
18. System Status - The controller shall have a default display the following on:
    a System status
    b Date, time and type of the next exercise event
    c Average voltage of the preferred and standby sources
    d Scrolling through the displays shall indicate the following:
        i) Line to line and line to neutral voltages for both sources
        ii) Frequency of each source
        iii) Load current for each phase
        iv) Single or three phase operation
        v) Type of transition
        vi) Preferred source
        vii) Commit or no commit modes of operation
        viii) Source/source mode
        ix) In phase monitor enable/disable
        x) Phase rotation
        xi) Date and time
19. Controllers that require multiple screens to determine system status or display “coded" system status messages, which must be explained by references in the operator’s manual, are not permissible.
20. Self-Diagnostics - The controller shall contain a diagnostic screen for the purpose of detecting system errors. This screen shall provide information on the status input signals to the controller which may be preventing load transfer commands from being completed.

21. Communications Interface - The controller shall be capable of interfacing, through a standard communication with a network of transfer switches and generators. It shall be able to be connected via an RS-485 serial communication (up to 4000 ft. direct connect or multi-drop configuration). This module shall allow for seamless integration of existing or new communication transfer devices and generators.
22. The transfer switch shall also be able to interface to 3rd party applications using Modbus RTU open standard protocols utilizing Modbus register maps. Proprietary protocols shall not be acceptable.
23. The controller shall contain a USB port for use with a software diagnostic application available to factory authorized personnel for downloading the controller's parameters and settings; exercise event schedules; maintenance records and event history. The application can also adjust parameters on the controller.
24. Data Logging - The controller shall have the ability to log data and to maintain the last 2000 events, even in the event of total power loss. The following events shall be time and date stamped and maintained in a non-volatile memory. The controller shall be able to display up to the last 99 events. The remaining events shall be accessible via the communications interface port or USB.
    a Event Logging
        i) Data, date and time indication of any event
    b Statistical Data
        i) Total number of transfers*
        ii) Total number of fail to transfers*
        iii) Total number of transfers due to preferred source failure*
        iv) Total number of minutes of operation*
        v) Total number of minutes in the standby source*
        vi) Total number of minutes not in the preferred source*
        vii) Normal to emergency transfer time
        viii) Emergency to normal transfer time
        ix) System start date
        x) Last maintenance date
        xi) * The statistical data shall be held in two registers. One register shall contain data since start up and the second register shall contain data from the last maintenance reset.
25. External DC Power Supply - An optional provision shall be available to connect up to two external 12/24 VDC power supply to allow the LCD and the door mounted control indicators to remain functional when both power sources are dead for extended periods of time. This module shall contain reverse battery connection indication and circuit protection.

2.3 Accessories

A. Padlockable User Interface Cover. The user interface cover shall protect the controller user interface from the environment.
B. Controller Disconnect Switch. A Logic disconnect switch shall be mounted inside the enclosure, and shall disconnect power to controller without disconnecting the load. The logic disconnect switch shall disconnect utility power to the controller during maintenance and service without disconnecting power to the load. The switch has two positions, auto and disconnect. The disconnect position shall disconnect the voltage sensing leads for the utility source (A, B, C, N). It is assumed that the user shall disable the generator by placing the controller in the OFF position.
C. Standard I/O Module. The standard I/O Module shall have two programmable inputs and six programmable outputs.
    i. Inputs Available 2
        1. Contact Closure
        2. Current 5mA Max.
        3. Connection Type Terminal Strip
        4. Wire Size #14-24 AWG

5. Max Distance 700 feet

ii. Outputs Available 6

1. Contact Type Form C (SPDT)
2. Contact Rating 2A @ 30VDC, 500mA @ 125VAC
3. Connection Type Terminal Strip
4. Wire Size #14-24

2.4 Source Quality Control

A Test and Inspection

1. Upon request, the manufacturer shall provide a notarized letter certifying compliance with all of the requirements of this specification including compliance with the above codes and standards. The certification shall identify, by serial number(s), the equipment involved. No exceptions to the specifications, other than those stipulated at the time of the submittal, shall be included in the certification.
2. The ATS manufacturer shall be certified to ISO 9001 International Quality Standard and the manufacturer shall have third party certification verifying quality assurance in design/development, production, installation and servicing in accordance with ISO 9001.

END OF SECTION

SECTION 263213.4
AUTOMATIC TRANSFER SWITCH

PART 1 GENERAL

1.1 Summary

A This section includes the following items from a single supplier:
1. Automatic transfer switch

B Related Requirements
1. It is the intent of this specification to secure an automatic transfer switch that has been prototype tested, factory built, production-tested, and site-tested together with all accessories necessary for a complete installation as shown on the plans and drawings and specified herein.
2. Any exceptions to the published specifications shall be subject to the approval of the engineer and submitted minimum 10 days prior to the closing of the bid with a line by line summary description of all the items of compliance, any items that have been are omitted or have been taken exception to, and a complete description of all deviations.
3. It is the intent of this specification to secure an automatic transfer switch that has been tested during design verification, in production, and at the final job site. The automatic transfer switch will be a commercial design and will be complete with all of the necessary accessories for complete installation as shown on the plans, drawings, and specifications herein. The equipment supplied shall meet the requirements of the National Electrical Code and applicable local codes and regulations.
4. All equipment shall be new and of current production by an international, power system manufacturer of generators, transfer switches, and paralleling switchgear. The manufacturer shall be a supplier of a complete and coordinated system. There will be single-source responsibility for warranty, parts, and service through a factory-authorized representative with factory-trained technicians.

1.2 Submittals

A Action Submittals
1. Product Data
   a The submittal shall include specification sheets showing all standard and optional accessories to be supplied; schematic wiring diagrams, dimension drawings, and interconnection diagrams identifying by terminal number each required interconnection between the generator set, the transfer switch, and the remote annunciator panel if it is included elsewhere in these specifications.
2. Shop Drawings

B Closeout Submittals
1. Operation And Maintenance Data
2. Warranty Documentation

1.3 Quality Assurance

A Regulatory Agency
1. The automatic transfer switch shall conform to the requirements of the following codes and standards:
   a UL 1008 - Standard for Transfer Switch Equipment

b IEC 947-6-1 Low-voltage Switchgear and Control gear; Multifunction equipment; Automatic Transfer Switching EquipmentEN55011, Limits and Methods of Measurement of Radio Interference Characteristics of Industrial, Scientific and Medical Equipment.
c NFPA 70 - National Electrical Code
d NFPA 99 - Essential Electrical Systems for Health Care Facilities
e NFPA 110 - Emergency and Standby Power Systems
f IEEE Standard 446 - IEEE Recommended Practice for Emergency and Standby Power Systems for Commercial and Industrial Applications
g NEMA Standard ICS 10-2005, Electromechanical AC Transfer Switch Equipment.
h EN61000-4-4 Fast Transient Immunity Severity Level 4
i EN61000-4-5 Surge Immunity Class 4 (voltage sensing and programmable inputs only)
j IEEE 472 (ANSI C37.90A) Ring Wave Test
k IEC Specifications for EMI/EMC Immunity (CISPR 11, IEC 1000-4-2, IEC 1000-4-3, IEC 1000-4-4, IEC 1000-4-5, IEC 1000-4-6, IEC 1000-4-8, IEC 1000-4-11)
l CSA C22.2 No. 178 certification

2. Qualifications
   a The automatic transfer switch shall be produced by a manufacturer who is ISO 9001 certified for the design, development, production and service of its complete product line.
   b A manufacturer who has produced this type of equipment for a period of at least 10 years and who maintains a service organization available twenty-four hours a day throughout the year shall produce the automatic transfer switch.

3. Manufacturers
   a The automatic transfer switch shall be furnished by a single manufacturer who shall be responsible for the design, coordination, and testing of the complete system. The entire system shall be installed as shown on the plans, drawings, and specifications herein.
   b The manufacturer shall maintain a national service organization of employing personnel located throughout the contiguous United States. The Service center's personnel must be factory trained and must be on call 24 hours a day, 365 days a year.
   c The manufacturer shall maintain records of each switch, by serial number, for a minimum of 20 years.
   d The basis of design is a Kohler model KEP-DMTC-4000S-TQ. If the supplier wishes to propose equivalent equipment as manufactured by Russelectric, all additional costs associated with re-engineering and mechanical & electrical modifications to the installation will be at the contractor's expense. The contractor must also supply the details below with his proposal:
      - A line-by-line clarification of the specification marked with "D" for deviation; "E" for exception, and "C" for comply.
      - The weight & outline dimensions of the proposed equipment.
   e Upon request, the manufacturer shall provide a notarized letter certifying compliance with all of the requirements of this specification. No exceptions to the specifications shall be allowed or included in the certification

1.4 Field or Site Conditions

A Ambient Conditions
1. Automatic transfer switch shall operate in the following conditions without any damage to the unit or its loads.
   a Ambient Temperature: -4 to 158 Degrees F
   b Relative Humidity: 5% to 95% noncondensing

1.5 Warranty or Bond

A Manufacturer’s Warranty

1. The ATS shall include a standard warranty covering one (1) year to guarantee against defective material and workmanship in accordance with the manufacturer's published warranty from the date of initial startup.
2. The ATS manufacturer and its distributor shall maintain a 24-hour parts and service organization. This organization shall regularly engage in maintenance contract programs to perform preventive maintenance and service on equipment similar to that specified. A service agreement shall be available and shall include system operation under simulated operating conditions; adjustment to the generator set, transfer switch, and switchgear controls as required, and certification in the owner's maintenance log of repairs made and functional tests performed on all systems.

PART 2 PRODUCTS

2.1 Equipment

A Equipment

1. Furnish and install an automatic transfer switches system(s) with 3-Pole / 4-Wire, Solid Neutral, 4000 Amps, 480V/60Hz. Each automatic transfer shall consist of an inherently double throw power transfer switch mechanism and a microprocessor controller to provide automatic operation. All transfer switches and controllers shall be the products of the same manufacturer.

B Manufacturer

1. Automatic transfer switches shall be Kohler Service Entrance Rated - Programmed Transition KEP-DMTC-4000S-TQ. Any alternate shall be submitted for approval to the consulting engineer at least 10 days prior to bid date.

C Construction

1. The transfer switch shall be electrically operated and mechanically held with double throw construction, and operated by a momentarily energized solenoid-driven mechanism.
2. All transfer switch sizes shall use only one type of main operator for ease of maintenance and commonality of parts.
3. The switch shall be positively locked and unaffected by momentarily outages, so that contact pressure is maintained at a constant value and contact temperature rise is minimized for maximum reliability and operating life.
4. All main contacts shall be silver composition. Switches rated 600 amperes and above shall have segmented, blow-on construction for high withstand and close-on capability and be protected by separate arcing contacts.
5. Inspection of all contacts shall be possible from the front of the switch without disassembly of operating linkages and without disconnection of power conductors. Switches rated 800 amperes and higher shall have front removable and replaceable contacts. All stationary and moveable contacts shall be replaceable without removing power conductors and/or bus bars.
6. Designs utilizing components of molded-case circuit breakers, contactors, or parts thereof, which are not intended for continuous duty, repetitive switching or transfer between two active power sources, are not acceptable.
7. For two and three pole switches, where neutral conductors are to be solidly connected as shown on the plans, a neutral conductor plate with fully rated AL-CU pressure connectors shall be provided.
8. For four pole switches with a switching neutral, where neutral conductors must be switched as shown on the plans, the contactor shall be provided with fully rated switched neutral transfer contacts. Overlapping neutral contacts may be used as an alternative.

D Enclosure

1. The ATS shall be furnished in a NEMA 3R enclosure.
2. All standard door mounted switches and indicating LEDs shall be integrated into a flush-mounted, interface membrane or equivalent in the enclosure door for easy viewing & replacement. The panel shall be capable of having a manual locking feature to allow the user to lockout all membrane mounted control switches to prevent unauthorized tampering. This cover shall be mounted with hinges and have a latch that may be padlocked. The membrane panel shall be suitable for mounting by others when furnished on open type units.

2.2 Operation

A Controls

1. A four line, 20 character LCD display and dynamic 4 button keypad shall be an integral part of the controller for viewing all available data and setting desired operational parameters. Operational parameters shall also be available for viewing and control through the communications interface port or USB. The following parameters shall only be adjustable via a password protected programming on the controller:
   a Nominal line voltage and frequency
   b Single or three phase sensing
   c Operating parameter protection
   d Transfer operating mode configuration (Standard transition, Programmed transition, or Closed transition)

B Voltage and Frequency

1. Voltage (all phases) and frequency on both the normal and emergency sources shall be continuously monitored, with the following pickup, dropout, and trip setting capabilities (values shown as % of nominal unless otherwise specified):

	Parameter	Dropout/Trip	Pickup/Reset
a	Under voltage	75 to 98%	85 to 100%
b	Over voltage	106 to 135%	95 to 100% of trip
c	Under frequency	95 to 99%	80 to 95%
d	Over frequency	01 to 115%	105 to 120%
e	Voltage unbalance	5 to 20%	3 to 18%

2. Repetitive accuracy of all settings shall be within ± 0.5% over an operating temperature range of -20°C to 70°C.
3. An adjustable dropout time for transient voltage and frequency excursions shall be provided. The time delays shall be 0.1 to 9.9 seconds for voltage and .1 to 15 seconds for frequency.
4. Voltage and frequency settings shall be field adjustable in 1% increments either locally with the display and keypad, remotely via the communications interface port or USB.
5. The controller shall be capable of sensing the phase rotation of both the normal and emergency sources. The source shall be considered unacceptable if the phase rotation is not the preferred rotation selected (ABC or BAC). Unacceptable phase rotation shall be indicated on the LCD; the service required LED and the annunciation through the communication protocol and dry contacts. In addition, the phase rotation sensing shall be capable of being disabled, if required.
6. The controller shall be capable of detecting a single phasing condition of a source, even though a voltage may be regenerated by the load. This condition is a loss of phase and shall be considered a failed source.
7. Source status screens shall be provided for both normal & emergency to provide digital readout of voltage on all 3 phases (phase to phase and phase to neutral), frequency, and phase rotation.

C Time Delays

1. An adjustable time delay of 0 to 6 seconds shall be provided to override momentary normal source outages and delay all transfer and engine starting signals. Capability shall be provided to extend this time delay to 60 minutes by providing an external 12 or 24 VDC power supply.

2. A time delay shall be provided on transfer to the emergency source, adjustable from 0 to 60 minutes, for controlled timing of transfer of loads to emergency.
3. A time delay shall be provided on re-transfer to normal. The time delays shall be adjustable from 0 to 60 minutes. Time delay shall be automatically bypassed if the emergency source fails and the normal source is acceptable.
4. A time delay shall be provided on shut down of engine generator for cool down, adjustable from 0 to 60 minutes.
5. A time delay activated output signal shall also be provided to drive external relay(s) for selective load disconnect and reconnect control. The controller shall be capable of controlling a maximum of 9 individual output time delays to step loads on after a transfer occurs. Each output may be individually programmed for their own time delay of up to 60 minutes. Each sequence shall be independently programmed for transferring from normal to emergency and transferring from emergency to normal.
6. All time delays shall be adjustable in 1 second increments.
7. All time delays shall be adjustable by using the display and keypad, with a remote device connected to the communications interface port or USB.
8. Each time delay shall be identified and a dynamic countdown shall be shown on the display. Active time delays can be viewed with a remote device connected to the communications interface port or USB.

D Additional Features

1. The controller shall have 3 levels of security. Level 1 shall allow monitoring of settings and parameters only. The Level 1 shall be capable of restricted with the use of a lockable cover. Level 2 shall allow test functions to be performed and Level 3 shall allow setting of all parameters.
2. The display shall provide for the test functions, allowed through password security. The test function shall be load, no load or auto test. The auto test function shall request an elapsed time for test. At the completion of this time delay the test shall be automatically ended and a retransfer sequence shall commence. All loaded tests shall be immediately ended and retransfer shall occur if the emergency source fails and the normal source is acceptable.
3. A contact closure shall be provided for a low-voltage engine start signal. The start signal shall prevent dry cranking of the engine by requiring the generator set to reach proper output, and run for the duration of the cool down setting, regardless of whether the normal source restores before the load is transferred.
4. Auxiliary contacts shall be provided consisting of a minimum of two contacts, closed when the ATS is connected to the normal source and two contacts closed, when the ATS is connected to the emergency source.
5. LED indicating lights shall be provided; one to indicate when the ATS is connected to the normal source (green) and one to indicate when the ATS is connected to the emergency source (red).
6. LED indicating lights shall be provided and energized by controller outputs. The lights shall provide true source availability of the normal (green) and emergency sources (red), as determined by the voltage, frequency and phase rotation sensing trip and reset settings for each source.
7. A membrane switch shall be provided on the membrane panel to test all indicating lights and display when pressed.
8. Provide the ability to select “commit/no commit to transfer" to determine whether the load should be transferred to the emergency generator if the normal source restores before the generator is ready to accept the load.
9. Terminals shall be provided for a remote contact which opens to signal the ATS to transfer to emergency and for remote contacts which closes to inhibit transfer to emergency and/or retransfer to normal. Both of these inhibit signals can be activated through the keypad, communications interface port or USB. A “not-in-auto" LED shall indicate anytime the controller is inhibiting transfer from occurring.
10. The programmed transition feature shall control the transfer so that mechanism is placed in a load disconnect position for an adjustable period of time, giving motor and transformer loads and

opportunity to decay to acceptable levels. The programmed transition feature shall be specifically designed for and be the product of the ATS manufacturer. The programmed transition setting shall be capable of being enabled or disabled from the user interface, communications interface port of USB. The controller shall include a built-in time delay for programmed transition operation. This time shall be adjustable from the user interface. The default value shall be 1 second and shall be adjustable from 0 to 60 minutes.

11. A time based load control feature shall be available to allow the prioritized addition and removal of loads based during transfer. This feature may be enabled for either or both sources. The user shall be able to control up to nine loads with independent timing sequences for pre and post transfer delays in either direction of transfer.
12. The controller shall provide 2 inputs for external controls that can be programmed from the following values:
    a. Common fault, Remote test, Inhibit transfer, Low battery voltage, Peak shave, Time delay bypass, Load shed forced to OFF position (Programmed transition only)
13. The controller shall provide two form "C" contact outputs rated for up to 12A @ 240VAC or 2A @ 480VAC that can be programmed from the following values:
    a. Aux switch open, Transfer switch aux contact fault, Alarm silenced, Alarm active, I/O communication loss, Contactor position, Exercise active, Test mode active, Fail to transfer, Fail to acquire standby source, Source available, Phase rotation error, Not in automatic mode, Common alarm, In phase monitor sync, Load bank control active, Load control active, Maintenance mode active, Non-emergency transfer, Fail to open/close, Loss of phase, Over/under voltage, Over/under frequency, Voltage unbalance, Start signal, Peak shave active, Preferred source supplying load, Standby source supplying load
14. The controller shall be capable of expanding the number of inputs and outputs with additional modules.
15. Optional input/output modules shall be furnished which mount on the inside of the enclosure to facilitate ease of connections.
16. Engine Exerciser - The controller shall provide an internal engine exerciser. The engine exerciser shall allow the user to program up to 21 different exercise routines based on a calendar mode. For each routine, the user shall be able to:
    a. Enable or disable the routine
    b. Enable or disable transfer of the load during routine.
    c. Set the start time, time of day, day of week, week of month (1st, 2nd, 3rd, 4th, alternate or every)
    d. Set the duration of the run.
    e. At the end of the specified loaded exercise duration the switch shall transfer the load back to normal and run the generator for the specified cool down period. All loaded exercises shall be immediately ended and retransfer shall occur if the standby source fails. The next exercise period shall be displayed on the main screen with the type of exercise, time and date. The type of exercise and the time remaining shall be display when the exercise is active. It shall be possible of ending the exercise event with a single button push.
17. Date and time - The date shall automatically adjust for leap year and the time shall have the capability of automatically adjusting for daylight saving and standard times.
18. System Status - The controller shall have a default display the following on:
    a. System status
    b. Date, time and type of the next exercise event
    c. Average voltage of the preferred and standby sources
    d. Scrolling through the displays shall indicate the following:
        1) Line to line and line to neutral voltages for both sources
        2) Frequency of each source
        3) Single or three phase operation
        4) Type of transition
        5) Preferred source
        6) Commit or no commit modes of operation

7) Source/source mode
8) In phase monitor enable/disable
9) Phase rotation
10) Date and time

19. Controllers that require multiple screens to determine system status or display “coded" system status messages, which must be explained by references in the operator’s manual, are not permissible.
20. Self-Diagnostics - The controller shall contain a diagnostic screen for the purpose of detecting system errors. This screen shall provide information on the status input signals to the controller which may be preventing load transfer commands from being completed.
21. Communications Interface - The controller shall be capable of interfacing, through a standard communication with a network of transfer switches and generators. It shall be able to be connected via an RS-485 serial communication (up to 4000 ft. direct connect or multi-drop configuration). This module shall allow for seamless integration of existing or new communication transfer devices and generators.
22. The transfer switch shall also be able to interface to 3rd party applications using Modbus RTU open standard protocols utilizing Modbus register maps. Proprietary protocols shall not be acceptable.
23. The controller shall contain a USB port for use with a software diagnostic application available to factory authorized personnel for downloading the controller’s parameters and settings; exercise event schedules; maintenance records and event history. The application can also adjust parameters on the controller.
24. Data Logging - The controller shall have the ability to log data and to maintain the last 2000 events, even in the event of total power loss. The following events shall be time and date stamped and maintained in a non-volatile memory. The controller shall be able to display up to the last 99 events. The remaining events shall be accessible via the communications interface port or USB.

a Event Logging
1) Data, date and time indication of any event

b Statistical Data
1) Total number of transfers*
2) Total number of fail to transfers*
3) Total number of transfers due to preferred source failure*
4) Total number of minutes of operation*
5) Total number of minutes in the standby source*
6) Total number of minutes not in the preferred source*
7) Normal to emergency transfer time
8) Emergency to normal transfer time
9) System start date
10) Last maintenance date
11) * The statistical data shall be held in two registers. One register shall contain data since start up and the second register shall contain data from the last maintenance reset.

25. External DC Power Supply - An optional provision shall be available to connect up to two external 12/24 VDC power supply to allow the LCD and the door mounted control indicators to remain functional when both power sources are dead for extended periods of time. This module shall contain reverse battery connection indication and circuit protection.

2.3 Service Entrance Switch

A. A two position disconnect switch shall be provided to disconnect the normal source and inhibit during maintenance or emergency.
   i. The controller shall display SERVICE DISCONNECT
   ii. Further transfer in inhibited after transfer to Emergency

B. Molded case circuit breakers (MCCB) shall be 80% rated. Molded case switches (MCSW) shall be 100% rated. Insulated case circuit breakers and insulated case switches shall be 100% rated.
C. The transfer switch mechanism shall provide a simple means of manual operation using only components, which are permanently affixed, in the operating position.
D. The unit shall permit manual operation of the transfer switch while the system is energized and carrying rated load. Transfer switches, which require all sources of power to be de-energized prior to manual load transferring, shall not be acceptable.
E. A control circuit isolation plug shall be provided to isolate all control circuitry inside the transfer switch to facilitate maintenance procedures. When isolated, there shall be no voltage present on the control circuitry.
F. Cable Connections: Provision shall be made to terminate all incoming and outgoing power cables and grounding conductors. Connections shall be via screw type cable lugs.
G. The Power Switching units shall be fix-mounted, utilize fully enclosed contacts and their withstand/closing rating shall be equal to or exceed the required withstand rating of the complete mechanism.
H. The service entrance rated automatic transfer switch shall automatically transfer the load to the generator supply in the event of a utility supply failure and return the load to the utility supply upon restoration. The transfer switch shall incorporate and isolating mechanism and over current protection on the utility supply to allow operation s the main services disconnect in accordance with NEC requirements. The transfer switch power switching devices shall be mechanically and electrically interlocked to prevent the utility and generator supplies from being interconnected.
I. Insulated Case Circuit Breaker Service Entrance Rated Transfer Switches
    i. The normal connection shall be provided with an electronic trip, 100% rated insulated case breaker with a 4000 amp current rating.
J. The ATS shall be able to completely disconnect power from the site with the single push of a single button or a single throw of a single switch.

2.4 Accessories

A. Padlockable User Interface Cover. The user interface cover shall protect the controller user interface from the environment.
B. Controller Disconnect Switch. A Logic disconnect switch shall be mounted inside the enclosure, and shall disconnect power to controller without disconnecting the load. The logic disconnect switch shall disconnect utility power to the controller during maintenance and service without disconnecting power to the load. The switch has two positions, auto and disconnect. The disconnect position shall disconnect the voltage sensing leads for the utility source (A, B, C, N). It is assumed that the user shall disable the generator by placing the controller in the OFF position.
C. Programmable Exerciser. A programmable exerciser shall be supplied to allow programming of up to 56 on/off events.
D. Surge Protection Device (SPD). A SPD shall be provided for protection of the normal source supply. The SPD shall be provided with replaceable cartridges to allow replacement of components without disconnecting the normal source supply. A 90dB audible alarm shall be provided as standard. A terminal block for remote contacts shall be provided. The SPD shall provide L-L, L-N, L-G, and N-G lines protection. LED status indicators shall be available on the face of the device to indicate operational state. The SPD device shall be listed to UL 1449, Edition 3.
E. Standard I/O Module. The standard I/O Module shall have two programmable inputs and six programmable outputs.
    a. Inputs Available 2
        i. Contact Closure
        ii. Current 5mA Max.
        iii. Connection Type Terminal Strip
        iv. Wire Size #14-24 AWG
        v. Max Distance 700 feet
    b. Outputs Available 6

i. Contact Type Form C (SPDT)
ii. Contact Rating 2A @ 30VDC, 500mA @ 125VAC
iii. Connection Type Terminal Strip
iv. Wire Size #14-24

2.5 Source Quality Control

A Test and Inspection

1. Upon request, the manufacturer shall provide a notarized letter certifying compliance with all of the requirements of this specification including compliance with the above codes and standards. The certification shall identify, by serial number(s), the equipment involved. No exceptions to the specifications, other than those stipulated at the time of the submittal, shall be included in the certification.
2. The ATS manufacturer shall be certified to ISO 9001 International Quality Standard and the manufacturer shall have third party certification verifying quality assurance in design/development, production, installation and servicing in accordance with ISO 9001.

END OF SECTION

THIS PAGE INTENTIONALLY LEFT BLANK FOR DOUBLE SIDED PRINTING

SECTION 264110

DISCONNECT SWITCHES

PART 1 GENERAL

1.1 SUMMARY

A. Section includes:
   1. Fusible and non-fusible disconnect switches.

1.2 REFERENCES

A. As specified in the Common Work Results for Electrical section.

B. National Electric Manufacturer's Association (NEMA):
   1. 250 - Enclosures for Electrical Equipment.
   2. KS 1-2001 - Enclosed and Miscellaneous Distribution Equipment Switches (600 Volts Maximum).

C. Underwriters Laboratories Inc. (UL):
   1. 20 - General-Use Snap Switches.
   2. 98 - Enclosed and Dead-Front Switches.
   3. 508 - Standard for Industrial Control Equipment.

1.3 DEFINITIONS

A. As specified in the Common Work Results for Electrical section.

B. Specific definitions:
   1. Safety switches and disconnect switches are to be considered synonymous.

1.4 SYSTEM DESCRIPTION

A. Provide heavy-duty type disconnect switches as indicated on the Drawings and specified in the Contract Documents.

B. Provide disconnect switches with the number of poles, voltage, current, short circuit, and horsepower ratings as required by the load and the power system.

1.5 SUBMITTALS

A. Furnish submittals as specified in the Common Work Results for Electrical section.

B. Product data:
   1. Manufacturer.
   2. Manufacturer's specifications and description.
   3. Ratings:
      a. Voltage.
      b. Current.
      c. Horsepower.
      d. Short circuit rating.
   4. Fused or non-fused.
   5. NEMA enclosure type.

6. Dimensions:
    a. Height.
    b. Width.
    c. Depth.
7. Weight.
8. Cross-referenced to the disconnect schedule indicated on the Drawings.

C. Shop drawings:
1. Manufacturer's installation instructions:
    a. Indicate application conditions and limitations of use stipulated by product testing agency specified under Quality Assurance, Regulatory Requirements below.
    b. Include instructions for storage, handling, protection, examination, preparation, installation, and operation of product.
2. Identify motor or equipment served by each switch; indicate nameplate inscription.

D. Installation instructions:
1. Provide anchorage instructions and requirement based on the seismic requirements at the Project Site as specified in the Common Work Results for Electrical section and calculations:
    a. Stamped by a professional engineer registered in the state where the Project is being constructed.

1.6 QUALITY ASSURANCE

A. As specified in the Common Work Results for Electrical section.

B. Regulatory requirements:
1. NEMA KS1- Enclosed and Miscellaneous Distribution Switches (600 V Maximum).
2. UL 98 - Enclosed and Dead-Front Switches.

C. Disconnect switches shall be UL listed and labeled.

1.7 DELIVERY, STORAGE, AND HANDLING

A. As specified in the Common Work Results for Electrical section.

1.8 PROJECT OR SITE CONDITIONS

A. As specified in the Common Work Results for Electrical section.

1.9 SEQUENCING

A. After successful review of the initial fault current study, submit complete equipment submittal.

1.10 SCHEDULING (NOT USED)

1.11 WARRANTY

A. As specified in the Common Work Results for Electrical section.

1.12 SYSTEM START-UP

A. As specified in the Common Work Results for Electrical section.

1.13 OWNER'S INSTRUCTIONS (NOT USED)

1.14 MAINTENANCE (NOT USED)

PART 2 PRODUCTS

2.1 MANUFACTURERS

A. One of the following or equal:
   1. Schneider Electric.
   2. Eaton.
   3. General Electric.
   4. Siemens.
   5. Appleton.
   6. Crouse-Hinds.

2.2 EXISTING PRODUCTS (NOT USED)

2.3 MATERIALS (NOT USED)

2.4 MANUFACTURED UNITS (NOT USED)

2.5 EQUIPMENT

A. Switch mechanism:
   1. Quick-make, quick-break heavy-duty operating mechanisms:
      a. Provisions for padlocking the switch in the Off position.
      b. A minimum of 90-degree handle travel position between Off and On positions:
         1) Provide handle position indicators to identify the handle position.
      c. Full cover interlock to prevent opening of the switch door in the On position and to prevent closing the switch mechanism with the door open:
         1) With an externally operated override.

B. Switch interior:
   1. Switch blades visible when the switch is Off and the cover is open.
   2. Lugs:
      a. Front accessible.
      b. Removable.
      c. UL listed for 60/75-degree Celsius copper conductors.
   3. Current carrying parts completely plated to resist corrosion.
   4. Removable arc suppressors to facilitate easy access to line side lugs.
   5. Furnish equipment ground kits for every switch.

C. Fused switches:
   1. UL approved for field conversion from standard Class H fuse spacing to Class J fuse spacing:
      a. Ratings 100 amperes through 600 amperes at 240 volts.
      b. Ratings 30 amperes through 600 amperes at 600 volts.
      c. Provide spring reinforced and plated fuse clips.

D. Ratings:
   1. UL horsepower rated for AC or DC with the rating not less than the load served.
   2. Current:
      a. 30 to 1,200 amperes.
   3. Voltage:

a. 250 volts AC, DC.
b. 600 volts (30 A to 200 A, 600 volts DC).

4. Poles:
   a. 2, 3, 4, and 6 poles.
5. UL listed short circuit ratings:
   a. 10,000 RMS symmetrical amperes when used with or protected by Class H or K fuses (30-600 amperes).
   b. 200,000 RMS symmetrical amperes when used with or protected by Class R or J fuses (30-600 amperes employing appropriate fuse rejection).
   c. 200,000 RMS symmetrical amperes when used with or protected by Class L fuses (800-1,200 amperes).
6. Where not indicated on the Drawings, provide switches with the NEMA ratings specified in Section 16050 - Common Work Results for Electrical for the installed location.

E. Size, fusing and number poles as indicated on the Drawings or as required:
   1. Provide solid neutral where indicated on the Drawings.

2.6 COMPONENTS (NOT USED)

2.7 ACCESSORIES

A. Disconnect switches to have provisions for a field installable “B” type electrical interlock for position indication as indicated on the Drawings.

B. Disconnect switches to have provisions for a field installed insulated groundable neutral kit as indicated on the Drawings.

C. NEMA Type 7 and 9 enclosures furnished with drain and breather kit when used in outdoor applications.

2.8 MIXES (NOT USED)

2.9 FABRICATION (NOT USED)

2.10 FINISHES (NOT USED)

2.11 SOURCE QUALITY CONTROL (NOT USED)

PART 3 EXECUTION

3.1 EXAMINATION (NOT USED)

3.2 PREPARATION (NOT USED)

3.3 INSTALLATION

A. As specified in the Common Work Results for Electrical section.

B. Install the equipment in accordance with the accepted installation instructions and anchorage details to meet the seismic and wind load requirements at the Project site.

C. General:
   1. Use Myers hubs or bolt-on hubs for all conduit penetrations on NEMA Type 12, Type 4, and Type 4X enclosures.

2. Provide all mounting brackets, stands, supports and hardware as required:
    a. Match finish and materials for all brackets, stands, and hardware with the switch installed.
    b. Provide adequate supporting pillar(s) for disconnect switches in accordance with the approved seismic calculations, and locate aboveground or above decks, where there is no structural wall or surface for box.
3. When possible, mount switches rigidly to exposed building structure or equipment structural members:
    a. For NEMA Type 4 and Type 4X locations, maintain a minimum of 7/8 inch air space between the enclosure and supporting surface.
    b. When mounting on preformed channel, position channel vertically so that water may freely run behind the enclosure.
4. Provide a nameplate for each disconnect switch:
    a. Provide per requirements specified in the Identification for Electrical Systems section.
    b. Identify voltage, circuit, fuse size, and equipment served on the nameplate.

3.4 ERECTION, INSTALLATION, APPLICATION, CONSTRUCTION (NOT USED)

3.5 REPAIR/RESTORATION (NOT USED)

3.6 RE-INSTALLATION (NOT USED)

3.7 COMMISSIONING

A. As specified in the Commissioning section.

3.8 FIELD QUALITY CONTROL

A. As specified in the Common Work Results for Electrical section.

3.9 ADJUSTING (NOT USED)

3.10 CLEANING

A. As specified in the Common Work Results for Electrical section.

3.11 PROTECTION

A. As specified in the Common Work Results for Electrical section.

3.12 SCHEDULES (NOT USED)

END OF SECTION

THIS PAGE INTENTIONALLY LEFT BLANK FOR DOUBLE SIDED PRINTING

SECTION 26412

LOW VOLTAGE MOLDED CASE CIRCUIT BREAKERS

PART 1 GENERAL

1.1 SUMMARY

A. Section includes:
   1. Low voltage molded case circuit breakers.

1.2 REFERENCES

A. As specified in the Common Work Results for Electrical section.

B. National Electrical Manufacturers Association (NEMA):
   1. AB 3. - Molded Case Circuit Breakers and Their Application.

C. Underwriter's Laboratories (UL):
   1. 489 - Molded-Case Circuit Breakers, Molded-Case Switches, and Circuit-Breaker Enclosures.
   2. 943 - Ground Fault Circuit Interrupters.

1.3 DEFINITIONS

A. As specified in the Common Work Results for Electrical section.

B. In accordance with UL 489.

1.4 SYSTEM DESCRIPTION

A. Molded case thermal magnetic or motor circuit protector type circuit breakers as indicated on the Drawings and connected to form a completed system.

1.5 SUBMITTALS

A. Furnish submittals as specified in the Common Work Results for Electrical section.

B. Product data:
   1. Catalog cut sheets.
   2. Manufacturer's time-current curves for all molded case circuit breakers furnished.

1.6 QUALITY ASSURANCE

A. As specified in the Common Work Results for Electrical section.

B. Low voltage molded case circuit breakers shall be UL listed and labeled.

1.7 DELIVERY, STORAGE AND HANDLING

A. As specified in the Common Work Results for Electrical section.

1.8 PROJECT OR SITE CONDITIONS

A. As specified in the Common Work Results for Electrical section.

1.9 SEQUENCING (NOT USED)

1.10 SCHEDULING (NOT USED)

1.11 WARRANTY

A. As specified in the Common Work Results for Electrical section.

1.12 SYSTEM START-UP

A. As specified in the Common Work Results for Electrical section.

1.13 OWNER'S INSTRUCTIONS (NOT USED)

1.14 MAINTENANCE (NOT USED)

PART 2 PRODUCTS

2.1 MANUFACTURERS

A. One of the following or equal:
   1. Eaton.
   2. General Electric Co.
   3. Schneider Electric.
   4. ABB.

2.2 EXISTING PRODUCTS (NOT USED)

2.3 MATERIALS (NOT USED)

2.4 MANUFACTURED UNITS

A. General:
   1. Conforming to UL 489.
   2. Operating mechanism:
      a. Quick-make, quick-break, non-welding silver alloy contacts.
      b. Common Trip, Open and Close for multi-pole breakers such that all poles open and close simultaneously.
      c. Mechanically trip free from the handle.
      d. Trip indicating handle - automatically assumes a position midway between the manual ON and OFF positions to clearly indicate the circuit breaker has tripped.
      e. Lockable in the "OFF" position.
   3. Arc extinction:
      a. In arc chutes.
   4. Voltage and current ratings:
      a. Minimum ratings as indicated on the Drawings.
      b. Minimum frame size 100A.
   5. Interrupting ratings:
      a. Minimum ratings as indicated on the Drawings.
      b. Not less than the rating of the assembly (panelboard, switchboard, motor control center, etc.).

B. Motor circuit protectors:
   1. Instantaneous only circuit breaker as part of a listed combination motor controller.
   2. Each pole continuously adjustable in a linear scale with ‘LO’ and ‘HI’ settings factory calibrated.

2.5 EQUIPMENT (NOT USED)

2.6 COMPONENTS

A. Terminals:
   1. Line and load terminals suitable for the conductor type, size, and number of conductors in accordance with UL 489.

B. Case:
   1. Molded polyester glass reinforced.
   2. Ratings clearly marked.

C. Trip units:
   1. Provide thermal magnetic or solid-state trip units as indicated on the Drawings.
   2. Thermal magnetic:
      a. Instantaneous short circuit protection.
      b. Inverse time delay overload.
      c. Ambient or enclosure compensated by means of a bimetallic element.
   3. Solid state:
      a. With the following settings as indicated on the Drawings.
         1) Adjustable long time current setting.
         2) Adjustable long time delay.
         3) Adjustable short time pickup.
         4) Adjustable short time delay.
         5) Adjustable instantaneous pickup.
         6) Adjustable ground fault pickup as indicated on the Drawings.
         7) Adjustable ground fault delay as indicated on the Drawings.

D. Molded case circuit breakers for use in panelboards:
   1. Bolt-on type:
      a. Plug-in type breakers are not acceptable.
   2. Ground fault trip devices as indicated on the Drawings.

2.7 ACCESSORIES(NOT USED)

2.8 MIXES (NOT USED)

2.9 FABRICATION (NOT USED)

2.10 FINISHES (NOT USED)

2.11 SOURCE QUALITY CONTROL

A. Test breakers in accordance with:
   1. UL 489.
   2. Manufacturer’s standard testing procedures.

PART 3 EXECUTION

3.1 EXAMINATION (NOT USED)

3.2 PREPARATION (NOT USED)

3.3 INSTALLATION

A. Install breakers to correspond to the accepted shop drawings.

3.4 ERECTION, INSTALLATION, APPLICATION, CONSTRUCTION (NOT USED)

3.5 REPAIR/RESTORATION (NOT USED)

3.6 RE-INSTALLATION (NOT USED)

3.7 COMMISSIONING (NOT USED)

3.8 FIELD QUALITY CONTROL

A. As specified in the Common Work Results for Electrical section.

3.9 ADJUSTING

A. Adjust trip settings in accordance with Protective Device Coordination Study as accepted by the Engineer and in accordance with manufacturer's recommendations.

B. Adjust motor circuit protectors in accordance with NEC and the manufacturer's recommendation based on the nameplate values of the installed motor.

3.10 CLEANING (NOT USED)

3.11 PROTECTION

A. As specified in the Common Work Results for Electrical section.

3.12 SCHEDULES (NOT USED)

END OF SECTION

SECTION 264130

LOW VOLTAGE INSULATED CASE CIRCUIT BREAKERS

PART 1 GENERAL

1.1 SUMMARY

A. Section includes:
   1. Low voltage insulated case circuit breakers.

1.2 REFERENCES

A. As specified in the Common Work Results for Electrical section.

B. American National Standards Institute (ANSI):
   1. C37.13 - Standard for Low Voltage AC Power Circuit Breakers Used in Enclosures.
   2. C37.16 - Low Voltage Power Circuit Breakers and AC Power Circuit Breakers - Preferred Ratings, Related Requirements, and Application Recommendations.
   3. C37.17 - Standard for Trip Devices for AC and General Purpose DC Low Voltage Power Circuit Breakers.
   4. C37.50 - Low Voltage AC Power Circuit Breakers Used in Enclosures - Test Procedures.

C. National Electrical Manufacturers Association (NEMA):
   1. Standard No. AB 1. - Molded Case Circuit Breakers, Molded Case Switches, and Circuit Breaker Enclosures. (Adopted as UL 489).

D. Underwriter’s Laboratories (UL):
   1. UL 1066 - Standard for Safety for Low Voltage AC and DC Power Circuit Breakers Used in Enclosures.

1.3 DEFINITIONS

A. As specified in the Common Work Results for Electrical section.

1.4 SYSTEM DESCRIPTION

A. Insulated case circuit breakers as indicated on the Drawings and connect to form a completed system:
   1. Used to open and close a circuit, and to open a circuit automatically on a predetermined overload or overcurrent, without damage to itself when properly applied within its ratings.

1.5 SUBMITTALS

A. Furnish submittals as specified in the Common Work Results for Electrical section.

B. Product data:
   1. Catalog cut sheets.
   2. Manufacturer’s time-current curves for all trip devices furnished.

1.6 QUALITY ASSURANCE

A. As specified in the Common Work Results for Electrical section.

B. Insulated case circuit breakers shall be UL listed and labeled.

1.7 DELIVERY, STORAGE AND HANDLING

A. As specified in the Common Work Results for Electrical section.

1.8 PROJECT OR SITE CONDITIONS

A. As specified in the Common Work Results for Electrical section.

1.9 SEQUENCING (NOT USED)

1.10 SCHEDULING (NOT USED)

1.11 WARRANTY

A. As specified in the Common Work Results for Electrical section.

1.12 SYSTEM START-UP

A. As specified in the Common Work Results for Electrical section.

1.13 OWNER'S INSTRUCTIONS (NOT USED)

1.14 MAINTENANCE (NOT USED)

PART 2 PRODUCTS

2.1 MANUFACTURERS

A. One of the following or equal:
   1. Eaton.
   2. General Electric Co.
   3. Schneider Electric.
   4. ABB.

2.2 EXISTING PRODUCTS (NOT USED)

2.3 MATERIALS (NOT USED)

2.4 MANUFACTURED UNITS

A. Operating mechanism:
   1. Manual or electric as indicated on the Drawings:
      a. Manual operation:
         1) The circuit breaker closing spring is energized by no more than 6 operations of the constant-force charging handle.
         2) Pushing the "CLOSE (ON)" button will close the breaker's contacts and pushing the "OPEN (OFF)" button will open the breaker's contacts.
         3) The opening springs are automatically charged when the breaker is closed.
      b. Quick-make, quick-break, non-welding silver alloy contacts.
      c. Common trip, open and close for multi-pole breakers such that all poles open and close simultaneously.
      d. Mechanically trip free from the handle.

e. Trip indicating handles - automatically assumes a position midway between the manual ON and OFF positions to clearly indicate the circuit breaker has tripped.
f. Lockable in the "OFF" position.

B. Arc extinction:
1. In arc chutes.

C. Voltage and current ratings:
1. Minimum ratings as indicated on the Drawings.

D. Interrupting ratings:
1. Minimum ratings as indicated on the Drawings.
a. Modify as required to meet requirements of Contractor’s Short Circuit Fault Analysis as specified in the Electrical System Studies section.
2. Matching the rating of the assembly.

E. Circuit breaker mounting shall be as indicated on the Drawings and consist of one of the following configurations:
1. Draw out type capable of being racked to the disconnect position with the door closed:
a. Interlocks shall be provided to prevent connecting or disconnecting the circuit breaker unless the breaker is in the open position.
b. The breaker shall be prevented from being closed during any racking operation.
c. A test position shall be provided to permit operating the breaker while it is disconnected from the power circuit.
d. Equipped with interlocks to discharge stored energy spring before the circuit breaker is withdrawn from the cell.
2. Plug-in (stationary) type capable of being removed with the main bus power off.
3. Individually mounted in a separate enclosure.

2.5 EQUIPMENT (NOT USED)

2.6 COMPONENTS

A. Terminals:
1. Line and load terminals suitable for the conductor type, size, and number of conductors in accordance with UL 489.

B. Case:
1. Molded polyester glass reinforced.
2. Double level of insulation between primary current-carrying parts and operating personnel.
3. Ratings clearly marked.
4. Open contact indication.
5. Closed contact indication.
6. Charging spring charged indication.
7. Charging spring discharged indication.
8. Open pushbutton.
9. Close pushbutton.
10. Retractable charging handle.

C. Trip units:
1. Microprocessor based with positive action flux-shifting trip device and a solid-state type with the following functions:
a. Adjustable ampere setting:
1) To determine the value of current that the breaker will carry indefinitely.

b. Adjustable long time delay:
    1) Varies the time it will take the breakers to trip under sustained overload.
c. Adjustable short time pickup:
    1) Controls the level of high current the breaker will carry for short periods.
d. Adjustable short time delay:
    1) Controls the length of time the breaker will carry a high current without tripping.
e. Adjustable instantaneous pickup:
    1) Controls level at which immediate tripping of breaker occurs.
f. Adjustable ground fault pickup:
    1) Controls the level at which the breaker will trip under a ground fault condition.
g. Adjustable ground fault delay:
    1) Controls the time that a ground fault can exist without tripping the breaker.
h. Long time pickup indicator:
    1) Provides a visual indication that the breaker is experiencing an overload condition.

D. Fault indicators:
    1. Powered from a lithium battery.
    2. LED indicators for:
        a. Short circuit fault trip on the instantaneous feature.
        b. Ground fault trip.

2.7 ACCESSORIES

A. Provide circuit breakers with the following accessories as indicated on the Drawings and required for proper operation of the control system:
    1. Electrical operator (field convertible by adding a plug-in motor operator):
        a. The circuit breaker closing spring is energized by an electric motor-driven charging mechanism.
    2. Neutral current sensor for use when the ground-fault option is selected on 3-phase, 4-wire 480Y/277 VAC power systems.
    3. Anti-pump provision to prevent closing or reclosing operations when used with a normally closed contact in the ‘close’ circuit.
    4. Auxiliary switch to signal the breaker’s opened or closed status.
    5. Terminal blocks.
    6. Operations counter.

2.8 MIXES (NOT USED)

2.9 FABRICATION (NOT USED)

2.10 FINISHES (NOT USED)

2.11 SOURCE QUALITY CONTROL

A. Test breakers in accordance with:
    1. UL 489.
    2. Manufacturer’s standard testing procedures.

PART 3 EXECUTION

3.1 EXAMINATION (NOT USED)

3.2 PREPARATION (NOT USED)

3.3 INSTALLATION

A. Install breakers to correspond to the accepted shop drawings.

3.4 ERECTION, INSTALLATION, APPLICATION, CONSTRUCTION (NOT USED)

3.5 REPAIR/RESTORATION (NOT USED)

3.6 RE-INSTALLATION (NOT USED)

3.7 COMMISSIONING

A. As specified in the Commissioning section.

3.8 FIELD QUALITY CONTROL

A. As specified in the Common Work Results for Electrical section.

3.9 ADJUSTING

A. Adjust trip settings in accordance with Protective Device Coordination Study as accepted by the Engineer and in accordance with the manufacturer’s recommendations.

3.10 CLEANING (NOT USED)

3.11 PROTECTION

A. As specified in the Common Work Results for Electrical section.

3.12 SCHEDULES (NOT USED)

END OF SECTION

THIS PAGE INTENTIONALLY LEFT BLANK FOR DOUBLE SIDED PRINTING

SECTION 264220

MOTOR STARTERS

PART 1 GENERAL

1.1 SUMMARY

A. Section includes:
   1. Motor starters and contactors.

1.2 REFERENCES

A. As specified in Section the Common Work Results for Electrical section.

B. International Electrotechnical Commission (IEC):
   1. 60 947-4 - Low-Voltage Switchgear and Control Gear.
   2. 801-1 - Electromagnetic Compatibility for Industrial-Process Measurement and Control Equipment - Part 1: General Information.

C. National Electrical Manufacturer's Association (NEMA):
   1. ICS 2 - Industrial Control and Systems: Controllers, Contactors, and Overload Relays Rated 600 V.

D. Underwriters Laboratories (UL):
   1. 508 - Standard for Industrial Control Equipment.
   2. 508A - Standard for Industrial Control Panels.

1.3 DEFINITIONS

A. As specified in the Common Work Results for Electrical section.

B. Specific definitions and abbreviations:
   1. FVNR: Full voltage non-reversing.
   2. Overload relay class: A classification of an overload relay time current characteristic by means of a number which designates the maximum time in seconds at which it will operate when carrying a current equal to 600 percent of its current rating.

1.4 SYSTEM DESCRIPTION

A. General requirements:
   1. Starters for motor control centers, individual enclosed starters, or control panels.

1.5 SUBMITTALS

A. Furnish submittals as specified in the Common Work Results for Electrical section:
   1. Submit motor starter data with equipment submittal.

B. Product data:
   1. Manufacturer.
   2. Catalog cut sheets.
   3. Technical information.
   4. Complete nameplate schedule.
   5. Complete bill of material.

6. List of recommended spare parts.
7. Confirmation that the overload relay class for each starter meets the requirements of the equipment and motor supplier.
8. Electrical ratings:
    a. Phase.
    b. Wire.
    c. Voltage.
    d. Ampacity.
    e. Horsepower.
9. Furnish circuit breaker submittals as specified in the Low Voltage Molded Case Circuit Breakers section.

C. Shop drawings:
1. Elementary and schematic diagrams:
    a. Provide 1 diagram for every starter and contactor.
    b. Indicate wire numbers for all control wires on the diagrams:
        1) Wire numbering as specified in the Identification for Electrical Systems section.
    c. Indicate interfaces with other equipment on the drawings.

D. Operation and maintenance manuals:
1. Submit complete operating and maintenance instructions presenting full details for care and maintenance of equipment furnished or installed under this Section. Including but not limited to:
    a. Electrical ratings:
        1) Phase.
        2) Wire.
        3) Voltage.
        4) Ampacity.
    b. Complete bill of material.
    c. Manufacturer’s operating and maintenance instructions starter and/or contactor component parts, including:
        1) Protective devices (fuses, breakers, overload relays, heater elements, etc.).
        2) Pilot devices.
    d. Complete renewal parts list.
    e. As-built drawings:
        1) Furnish as-built drawings for each starter and contactor indicating final:
            a) Wire numbers.
            b) Interfaces with other equipment.
        2) 11-inch by 17-inch format.

E. Certifications.

1.6 QUALITY ASSURANCE

A. As specified in the Common Work Results for Electrical section.

B. Regulatory requirements:
1. All starters and components shall be UL listed and labeled:
    a. UL 508 - Industrial Control Equipment.
    b. UL 508A - Industrial Control Panels.
2. NEMA ICS 2 - Industrial Control and System Controllers; Contactors and Overload Relays Rated: 600 Volts.
3. Combination starters shall be UL listed and labeled.

1.7 DELIVERY, STORAGE, AND HANDLING

A. As specified in the Common Work Results for Electrical section.

1.8 PROJECT OR SITE CONDITIONS

A. As specified in the Common Work Results for Electrical section.

1.9 SEQUENCING (NOT USED)

1.10 SCHEDULING (NOT USED)

1.11 WARRANTY

A. As specified in the Common Work Results for Electrical section.

1.12 SYSTEM START-UP

A. As specified in the Common Work Results for Electrical section.

1.13 OWNER'S INSTRUCTIONS (NOT USED)

1.14 MAINTENANCE

A. Spare parts:
   1. Provide the following spare parts, suitably packaged and labeled with the corresponding equipment number:
      a. 1 spare fuse of each size and type per starter.

PART 2 PRODUCTS

2.1 MANUFACTURERS

A. One of the following or equal:
   1. NEMA starters and contactors:
      a. Allen-Bradley.
      b. Schneider Electric.
      c. General Electric.
      d. Eaton.

2.2 EXISTING PRODUCTS (NOT USED)

2.3 MATERIALS (NOT USED)

2.4 MANUFACTURED UNITS

A. General:
   1. Provide combination type starters with motor circuit protector or thermal-magnetic circuit breaker and control power transformer with ratings as indicated on the Drawings.
   2. NEMA size, design, and rated:
      a. NEMA Size 1 minimum.
   3. Coordinate motor circuit protector, thermal magnetic circuit breaker, or fusible disconnect, and overload trip ratings with nameplate horsepower and current ratings of the installed motor:

a. If motors provided are different in horsepower rating than those specified or indicated on the Drawings, provide starters coordinated to the actual motors furnished.

4. Provide starters NEMA Size 2 and larger with arc quenchers on load breaking contacts.
5. Mount extended overload reset buttons to be accessible for operation without opening starter enclosure door.

B. Full voltage starters (FVNR):
1. Across-the-line full voltage magnetic starters.
2. Rated for 600 volts.
3. Electrical characteristics as indicated on the Drawings.
4. Provide positive, quick-make, quick-break mechanisms, pad lockable enclosure doors.
5. Furnish starter with bi-metallic solid state electronic overload relays.
6. Double-break silver alloy contacts.
7. Reversing starters provided with both mechanical and electrical interlocks to prevent line shorts and energizing both contactors simultaneously.

2.5 EQUIPMENT (NOT USED)

2.6 COMPONENTS

A. Molded case circuit breakers:
1. Circuit breaker type and ratings as indicated on the Drawings.
2. Provide as specified in the Low Voltage Molded Case Circuit Breakers section.

B. Contactors:
1. NEMA size as indicated on the Drawings.
2. Electrically held:
a. For lighting loads designed to withstand the initial inrush currents of ballast and lamp loads.
3. Factory adjusted and chatter free.
4. Auxiliary contacts:
a. Contact ratings as per NEMA A 600 rating:
1) Auxiliary contacts rated 10 amps at 600 volts.
b. Provide all contacts indicated on the Drawings, and any additional contacts required for proper operation.
c. Provide at least 1 normally open and 1 normally closed spare auxiliary contact.
5. Constructed in accordance with the following standards:
a. UL 508.
b. IEC 947-4:
1) Type 1 coordination when protected by a circuit breaker.
2) Type 2 coordination when protected by a suitable UL listed fuse.
c. IEC 801-1 parts 2 through 6.

C. Overloads:
1. Solid state electronic:
a. Selectable Class 10, 20, 30 protection.
b. Ambient insensitive:
1) Operating temperature: -20 to 70 degrees Celsius.
c. Thermal memory.
d. Protective functions:
1) Motor overcurrent.
2) Phase unbalance (adjustable.)
3) Phase loss.
4) Ground fault protection.

e. Self-powered.
f. Provide current transformers for metering of motor current.
g. Visible trip indicator.
h. Push-to-trip test.
i. Isolated normally open alarm contact.
j. Normally closed trip contact.
k. Manual/Automatic reset.

D. Control power transformer:
1. Furnish integral control power transformer capacity to power:
a. All motor controls; Motor and starter accessories indicated on the Drawings or specified.
2. Primary and secondary fusing as indicated on the Drawings:
a. Fusing sized by the manufacturer for the rating of the transformer furnished.
3. Control power transformer secondary voltage:
a. As indicated on the Drawings.

2.7 ACCESSORIES

A. Lugs and terminals:
1. For all external connections of No. 6 AWG and larger.
2. UL listed for either copper or aluminum conductors.

B. Surge protective devices:
1. Furnish surge protection devices across the coil of each starter, contactor, and relay.

C. Pilot devices:
1. Provide pilot lights, switches, elapsed time meters, and other devices as specified or as indicated on the Drawings.
2. As specified in the Control Systems: Panels, Enclosures, and Panel Components section.

D. Nameplates and wire markers:
1. As specified in the Identification for Electrical Systems section.

E. Conformal coating:
1. Provide conformal coating material applied to electronic circuitry and printed circuit boards to act as protection against moisture, dust, temperature extremes, and chemicals such as H_2S and chlorine.

2.8 MIXES (NOT USED)

2.9 FABRICATION (NOT USED)

2.10 FINISHES (NOT USED)

2.11 SOURCE QUALITY CONTROL (NOT USED)

PART 3 EXECUTION

3.1 EXAMINATION (NOT USED)

3.2 PREPARATION (NOT USED)

3.3 INSTALLATION

A. As specified in the Common Work Results for Electrical section.

B. Install the equipment in accordance with the accepted installation instructions and anchorage details to meet the seismic and wind load requirements at the Project site.

C. Starters in motor control centers:
   1. Install as specified in the Low Voltage Motor Control Centers section.

D. Starters in control panels:
   1. Install as specified in the Control Systems: Panels, Enclosures, and Panel Components section.

3.4 ERECTION, INSTALLATION, APPLICATION, CONSTRUCTION (NOT USED)

3.5 REPAIR/RESTORATION (NOT USED)

3.6 RE-INSTALLATION (NOT USED)

3.7 COMMISSIONING

A. Factory testing:
   1. Owner and Engineer will witness the factory acceptance test as specified in the Common Work Results for Electrical section.

3.8 FIELD QUALITY CONTROL

A. As specified in the Common Work Results for Electrical section.

3.9 ADJUSTING

A. Make all adjustments as necessary and recommended by the manufacturer, Engineer, or testing firm.

B. Set all overloads and motor circuit protectors based on the nameplate values of the installed motor.

3.10 CLEANING

A. As specified in the Common Work Results for Electrical section.

3.11 PROTECTION

A. As specified in the Common Work Results for Electrical section.

3.12 SCHEDULES (NOT USED)

END OF SECTION

SECTION 264410

GROUP-MOUNTED CIRCUIT BREAKER SWITCHBOARDS

PART 1 GENERAL

1.1 SUMMARY

A. Section includes:
1. Free standing, dead-front type metal-enclosed distribution, low voltage switchboards, utilizing group mounted circuit protective devices.

1.2 REFERENCES

A. As specified in the Common Work Results for Electrical section.

B. National Electrical Manufacturers' Association (NEMA):
1. PB-2 - Dead-front Distribution Switchboards.

C. Underwriters' Laboratories, Inc. (UL):
1. 50 - Standard for Enclosures for Electrical Equipment.
2. 891 - Switchboards.

1.3 DEFINITIONS

A. As specified in the Common Work Results for Electrical section.

1.4 SYSTEM DESCRIPTION

A. Factory assembled, wired, and tested switchboards, with major components being products of a single manufacturer, including but not limited to, circuit breakers, bus and enclosure with accessories and features specified in this Section and indicated on the Drawings.

1.5 SUBMITTALS

A. Furnish submittals as specified in the Common Work Results for Electrical section.

B. Product data:
1. Manufacturer of switchboard.
2. Manufacturer of all component parts of switchboard.
3. Weight of switchboard.
4. Dimensions:
   a. Height.
   b. Length.
   c. Width.
5. Nameplate schedule.
6. Bill of material.
7. Ratings:
   a. Voltage.
   b. Phase.
   c. Current.
   d. Interrupting rating (circuit breakers and fuses).
   e. Momentary current rating.
8. List of recommended spare parts.
9. Name and telephone number of manufacturer’s authorized parts and repair provider.

10. Furnish circuit breaker submittals as specified in:
    a. Low Voltage Molded Case Circuit Breakers section.
    b. Low Voltage Insulated Case Circuit Breakers section.
11. For equipment installed in structures designated as seismic design category C, D, E, or F submit the following as specified in the Common Work Results for Electrical section:
    a. Manufacturer's statement of seismic qualification with substantiating test data.
    b. Manufacturer's special seismic certification with substantiating test data.

C. Shop drawings:
1. Layout drawings:
    a. Complete, detailed, and scaled switchboard layout:
        1) Front panel.
        2) Sub-panels.
        3) Interior panels.
        4) Top and bottom conduit windows.

D. Installation instructions:
1. Detail the complete installation of the equipment including rigging, moving, and setting into place.
2. For equipment installed in structures designated as seismic design category A or B:
    a. Provide manufacturer's installation instructions and anchoring details for connecting equipment to supports and structures.
3. For equipment installed in structures designated as seismic design category C, D, E, or F:
    a. Provide project-specific installation instructions and anchoring details based on support conditions and requirements to resist seismic and wind loads as specified in the Common Work Results for Electrical section.
    b. Submit anchoring drawings with supporting calculations.
    c. Drawings and calculations shall be stamped by a professional engineer registered in the state where the Project is being constructed.

E. Operating and maintenance manuals:
1. Submit operating instructions and a maintenance manual for the switchboard(s) furnished and/or installed under this Contract.
2. Maintenance manual:
    a. Furnish maintenance manuals with instructions covering all details pertaining to care and maintenance of all equipment as well as data identifying all parts.
    b. Manuals to include but are not limited to the following:
        1) Adjustment and test instructions covering the steps involved in the initial test, adjustment, and start-up procedures.

F. Test forms and reports:
1. Submit complete factory acceptance test procedures and all forms used during the test.
2. Manufacturer to furnish a certified report after the shop tests.
3. Manufacturer to furnish a certified report after the start-up:
    a. Report must state that the installation is complete and satisfactory, or list items requiring additional work and a proposal for the corrective actions.

G. Certification letters:
1. Provide a letter from the switchboard manufacturer that lists every paragraph, subparagraph etc. of this Section and states compliance or non-compliance with said paragraph. If non-compliance is indicated, provide an explanation for the deviation and alternative method to address the non-compliance.

H. Calculations:

1. Detailed calculations or details of the actual physical testing performed on the switchboard to prove the switchboard is suitable for the seismic requirements at the Project Site.

1.6 QUALITY ASSURANCE

A. As specified in the Common Work Results for Electrical section.

B. Where indicated on the Drawings as service entrance equipment, the switchboard shall be UL labeled and listed “Suitable for Service Entrance.”

C. Sections and devices shall be UL listed and labeled.

D. The manufacturer of this equipment shall have produced similar electrical equipment for a minimum period of 5 years. When requested by the Engineer, an acceptable list of installations with similar equipment shall be provided demonstrating compliance with this requirement.

1.7 DELIVERY STORAGE AND HANDLING

A. As specified in the Common Work Results for Electrical section.

B. Ship the switchboard to the job site on a dedicated air ride vehicle that will allow the Contractor to utilize onsite off-loading equipment:
1. Energize space heaters in NEMA 3R switchboards.

C. Furnish temporary equipment heaters within the switchboard to prevent condensation from forming.

1.8 PROJECT OR SITE CONDITIONS

A. As specified in the Common Work Results for Electrical section.

1.9 SEQUENCING

A. Conduct the initial fault current study as specified in the Electrical System Studies section and submit results for Engineer’s review.

B. After successful review of the initial fault current study, submit complete equipment submittal.

C. Conduct factory acceptance test and submit certified test results for Engineer’s review.

D. Ship equipment to Project Site after successful completion of factory acceptance test.

E. Assemble equipment in the field.

F. Conduct field acceptance test and submit results for Engineer’s review.

G. Submit manufacturer’s certification that equipment has been properly installed and is fully functional for Engineer’s review.

H. Conduct Owner’s training sessions.

I. Commissioning as specified in the Commissioning section.

1.10 SCHEDULING

A. As specified in the Common Work Results for Electrical section.

1.11 WARRANTY

A. As specified in the Common Work Results for Electrical section.

1.12 SYSTEM START-UP

A. As specified in the Common Work Results for Electrical section.

1.13 OWNER'S INSTRUCTIONS (NOT USED)

1.14 MAINTENANCE (NOT USED)

PART 2 PRODUCTS

2.1 MANUFACTURERS

A. One of the following or equal:
   1. Eaton, "Pow-R-Line C."
   2. General Electric Co., "Spectra Series."
   3. Schneider Electric, "Power-Style QED."

B. Circuit breakers: Same manufacturer as the switchboard.

2.2 EXISTING PRODUCTS (NOT USED)

2.3 MATERIALS (NOT USED)

2.4 MANUFACTURED UNITS (NOT USED)

2.5 EQUIPMENT

A. Switchboard:
   1. Furnish low voltage switchboards as specified and indicated on the Drawings.
   2. Provide complete and functional switchboards with required controls.
   3. Furnish and install devices or accessories not described in this Section but necessary for the proper installation and operation of the equipment.

B. Voltage ratings:
   1. Voltage level and configuration: As indicated on the Drawings.
   2. Frequency: 60 hertz.

C. Bus:
   1. General:
      a. Tin-plated copper.
      b. Bus cross-section in accordance with UL heat rise requirements.
      c. Current density of 1,000 amperes per square inch.
      d. Mounted on supports of high-impact, non-tracking insulators.
      e. Phase A-B-C bus arrangement:
         1) Top-to-bottom, left-to-right, front-to-back throughout the switchboard.
      f. Symmetrical short circuit current bracing of as indicated on the Drawings.
      g. Continuous current rating as indicated on the Drawings.
   2. Horizontal bus:

a. Provisions for future connections to additional switchboard sections.
3. Ground bus:
a. Sized per UL 891.
4. Neutral bus:
a. Sized for 100 percent.

D. Enclosure:
1. General:
a. Self-supporting structures bolted together to form the required line-up.
b. All sections rear aligned.
c. Dead-front.
d. Conduit entry:
1) Open-bottom.
2) Removable top cover.
2. Frame:
a. Die-formed 12 gauge steel.
3. Covers:
a. Bolt-on.
b. Code gauge steel.
c. Removable front covers.
1) Held in place by captive screws.
4. Rating:
a. NEMA Type 1.

2.6 COMPONENTS

A. Circuit breakers:
1. General:
a. Molded case circuit breakers as specified in the Low Voltage Molded Case Circuit Breakers section.
b. Insulated case circuit breakers as specified in the Low Voltage Insulated Case Circuit Breakers section.
2. Main circuit breaker:
a. Frame, trip and short circuit ratings as indicated on the Drawings.
b. 100 percent rated.
c. Fixed mounted insulated case.
3. Feeder breakers:
a. Frame, trip and short circuit ratings as indicated on the Drawings.

B. Wiring:
1. Provide all necessary internal wiring, fuse blocks, and terminal blocks as required.
2. Number all wires at each end and indicate wire numbers on shop drawings.
3. Type SIS switchboard wire with at least 26 strands.
4. Minimum wire size:
a. No. 14 for control circuits.
b. No. 12 for potential and current transformer circuits.
5. Numbered and labeled in accordance with the Identification for Electrical Systems section.

2.7 ACCESSORIES

A. Metering system:
1. Include metering as indicated on the Drawings.
2. Provide microprocessor based power meters as specified in the Electrical Power Monitoring section.

B. Surge protective devices:
   1. Provide surge protective devices as indicated on the Drawings and as specified in the Surge Protective Devices section.

C. Nameplates:
   1. Provide engraved plastic nameplates to identify:
      a. Switchboard units.
      b. Door mounted components.
      c. Interior mounted devices.
   2. As specified in the Identification for Electrical Systems section.
   3. Engraved with the circuit number and circuit name as indicated on the Drawings.
   4. Manufacturers labels:
      a. Each vertical section shall have a label identifying:
         1) Serial number.
         2) Shop order number.
         3) Bus rating.
         4) Vertical section reference number.
         5) Date of manufacture.

D. Warning signs:
   1. Voltage:
      a. Provide a minimum of 2 warning signs on the front of the switchboard lineup and 2 on the back.
      b. Red laminated plastic engraved with white letters approximately 1/2 inch high.
      c. Signs shall read:
         1) "WARNING-HIGH VOLTAGE-KEEP OUT".
   2. Arc flash:
      a. Provide one warning sign for each switchboard compartment.
      b. Signs shall have read a minimum of:
         1) “DANGER ELECTRIC ARC FLASH HAZARD.”
         2) Signs shall meet the requirements of NFPA 70E and NEC Article 110.16.

E. Lugs:
   1. For all external connections of No. 6 AWG or larger.
   2. UL listed for copper or aluminum conductors.
   3. Rated for 75-degree Celsius conductors.
   4. Lugs shall be of the compression type in design requiring a hydraulic press and die for installation.

2.8 MIXES (NOT USED)

2.9 FABRICATION (NOT USED)

2.10 FINISHES

A. Chemically clean all steel surfaces before painting.

B. Exterior color manufacturer’s standard gray over phosphate-type rust inhibitor.

2.11 SOURCE QUALITY CONTROL (NOT USED)

PART 3 EXECUTION

3.1 EXAMINATION (NOT USED)

3.2 PREPARATION (NOT USED)

3.3 INSTALLATION

A. As specified in the Common Work Results for Electrical section.

B. Install the equipment in accordance with the accepted installation instructions and anchorage details to meet the seismic and wind load requirements at the Project site.

C. General:
   1. Furnish all cables, conduit, lugs, bolts, expansion anchors, sealants, and other accessories needed to complete the installation of the switchboard.
   2. Assemble and install the switchboard in the location and layout indicated on the Drawings.
   3. Perform work in accordance with manufacturer's instructions and shop drawings.
   4. Furnish components and equipment as required to complete the installation.
   5. Replace any hardware lost or damaged during the installation or handling to provide a complete installation.
   6. Install the switchboard on a raised concrete housekeeping pad:
      a. Provide structural leveling channels in accordance with the manufacturer's recommendations to provide proper alignment of the units.
      b. Weld and/or bolt the switchboard frame to be to the leveling channels.

3.4 ERECTION, INSTALLATION, APPLICATION, CONSTRUCTION (NOT USED)

3.5 REPAIR/RESTORATION (NOT USED)

3.6 REINSTALLATION (NOT USED)

3.7 COMMISSIONING

A. Factory tests:
   1. Completely assemble, wire and test the switchboard:
      a. Provide groups of wires leaving the shipping-assembled equipment with terminal blocks with suitable numbering strips.

3.8 FIELD QUALITY CONTROL

A. As specified in the Common Work Results for Electrical section.

3.9 ADJUSTING

A. Make all adjustments as necessary and recommended by the manufacturer, Engineer, or testing firm.

3.10 CLEANING

A. As specified in the Common Work Results for Electrical section.

3.11 PROTECTION

A. As specified in the Common Work Results for Electrical section.

3.12 SCHEDULES (NOT USED)

END OF SECTION

THIS PAGE INTENTIONALLY LEFT BLANK FOR DOUBLE SIDED PRINTING

SECTION 264450

PANELBOARDS

PART 1 GENERAL

1.1 SUMMARY

A. Section includes:
   1. Panelboards serving feeder circuits and branch circuits.

1.2 REFERENCES

A. As specified in the Common Work Results for Electrical section.

B. Underwriter's Laboratories, Inc. (UL):
   1. 67 - Standard for Panelboards.

1.3 DEFINITIONS

A. As specified in the Common Work Results for Electrical section.

1.4 SYSTEM DESCRIPTION

A. Circuit breaker panelboards as indicated in the panelboard schedules, one-lines, and where indicated on the Drawings:
   1. Service voltage and configuration as indicated on the panel schedules.

1.5 SUBMITTALS

A. Furnish submittals as specified in the Common Work Results for Electrical section.

B. Product data:
   1. Manufacturer of panelboard.
   2. Bill of material.
   3. Assembly ratings including:
      a. Voltage.
      b. Phase.
      c. Continuous current.
      d. Short circuit interrupting rating.
   4. NEMA enclosure type.
   5. Cable terminal sizes based upon actual feeder and sub-feeder conductors used.
   6. Furnish circuit breaker submittals as specified in the Low Voltage Molded Case Circuit Breakers section.
   7. For equipment installed in structures designated as seismic design category C, D, E, or F submit the following as specified in the Common Work Results for Electrical section:
      a. Manufacturer’s statement of seismic qualification with substantiating test data.
      b. Manufacturer’s special seismic certification with substantiating test data.

C. Shop drawings:
   1. Drawings to contain:
      a. Overall panelboard dimensions, interior panel dimensions, and wiring gutter dimensions:
         1) Height.
         2) Length.

3) Width.
b. Weight.
c. Anchoring locations.
d. Breaker layout drawing with dimensions:
1) Location of the main, branches, solid neutral, and ground.
e. Conduit entry/exit locations:
1) Identify all conduit entry/exit locations and restrictions.
f. Individual panel schedules identifying breaker locations, ratings, and nameplate designations within the panelboard, for every panelboard.

D. Installation instructions:
1. Detail the complete installation of the equipment including rigging, moving, and setting into place.
2. For equipment installed in structures designated as seismic design category A or B:
a. Provide manufacturer's installation instructions and anchoring details for connecting equipment to supports and structures.
3. For equipment installed in structures designated as seismic design category C, D, E, or F:
a. Provide project-specific installation instructions and anchoring details based on support conditions and requirements to resist seismic and wind loads as specified in the Common Work Results for Electrical section.
b. Submit anchoring drawings with supporting calculations.
c. Drawings and calculations shall be stamped by a professional engineer registered in the state where the Project is being constructed.

E. Operations and maintenance manual:
1. Provide a complete manual for the operation and maintenance of the panelboard, circuit breakers, devices, and accessories:
a. Including but not limited to:
1) Instruction narratives and bulletins.
2) Renewal parts lists.
3) Time-current curves for all devices.

F. Calculations:
1. Detailed calculations or details of the actual physical testing performed on the panelboard to prove the panelboard is suitable for the seismic requirements at the Project Site.

1.6 QUALITY ASSURANCE

A. As specified in the Common Work Results for Electrical section.

B. Panelboards shall be UL listed and labeled.
1. Where indicated as service entrance equipment, panelboards shall be UL labeled and listed "Suitable for Service Entrance."

1.7 DELIVERY, STORAGE, AND HANDLING

A. As specified in the Common Work Results for Electrical section.

1.8 PROJECT OR SITE CONDITIONS

A. As specified in the Common Work Results for Electrical section.

1.9 SEQUENCING (NOT USED)

1.10 SCHEDULING (NOT USED)

1.11 WARRANTY

A. As specified in the Common Work Results for Electrical section.

1.12 SYSTEM START-UP

A. As specified in the Common Work Results for Electrical section.

1.13 OWNER'S INSTRUCTIONS (NOT USED)

1.14 MAINTENANCE (NOT USED)

PART 2 PRODUCTS

2.1 MANUFACTURERS

A. One of the following or equal:
   1. Eaton.
   2. General Electric Co.
   3. Schneider Electric.

B. Circuit breakers:
   1. Same manufacturer as the panelboard.

2.2 EXISTING PRODUCTS (NOT USED)

2.3 MATERIALS (NOT USED)

2.4 MANUFACTURED UNITS (NOT USED)

2.5 EQUIPMENT

A. Provide panelboards with:
   1. Molded-case circuit breakers with trip ratings as shown on the panel schedules.
   2. Spares and spaces for future circuit breakers in panels as shown on the panel schedules.

B. Short circuit rating:
   1. Provide panelboards with short-circuit ratings as indicated on the Drawings:
   2. Testing method in accordance with UL 67.
   3. Mark each panelboard with its maximum short circuit rating at the supply voltage.
   4. Panelboards shall be fully rated.

2.6 COMPONENTS

A. Enclosure:

   1. NEMA enclosure type as indicated on the Drawings.
      a. Where not indicated on the Drawings, as specified in the Common Work Results for Electrical section for the installed location.
   2. Minimum width: 20 inches.
   3. Gutter space in accordance with the NEC:
      a. Minimum of 4 inches of gutter space.
   4. Dead-front, no live parts when the panelboard is in service.
   5. Enclose entire panelboard bus assembly in a corrosion resistant galvanized steel cabinet.

6. 4-piece front to provide ease of wiring access.
7. Lockable, hinged door over the protective devices with a flush, cylinder tumbler-type lock with catch and door pull.
    a. Minimum 2 keys per panelboard.
    b. Key all panelboard locks alike.
8. Circuit directory frame and card on the inside of the door.
9. Interior design such that replacement of circuit breakers does not require disturbing adjacent units or removal of the main bus connectors.
10. Outdoor locations: Provide NEMA Type 3R enclosures with a NEMA Type 3R outer enclosure (with a hinged door) and a NEMA Type 1 interior panelboard, unless otherwise indicated.

B. Bus:
1. General:
    a. Tin-plated copper.
2. Phase bus:
    a. Full size and height without reduction.
    b. Dimensions and temperature rise in accordance with UL 67:
        1) Limit current density to less than 1,000 amps per square inch.
    c. Insulate all current carrying parts from ground and phase-to-phase with a high dielectric strength insulator.
3. Ground bus:
    a. Copper, solidly bonded.
4. Neutral bus:
    a. Provide where indicated on the Drawings.
    b. 100 percent rated.
    c. Provide lugs for each outgoing feeder requiring a neutral connection.
5. Provide insulation barriers over the vertical bus behind the dead front shield to provide increased safety during field service.

C. Lugs:
1. UL listed for copper and aluminum wire:
    a. Provide lugs rated for 75-degree Celsius terminations.
    b. Provide bolted or compression main lug terminations as required for the incoming cable size.

D. Circuit breakers: As specified in the Low Voltage Molded Case Circuit Breakers section and as indicated on the Drawings:
1. Provide all circuit breakers with bolt-on connections:
    a. Plug-in circuit breakers are not allowed.

2.7 ACCESSORIES

A. Surge protective devices:
1. Furnish panelboards with surge protective devices as indicated on the Drawings.
2. As specified in the Surge Protective Devices section.

B. Nameplates:
1. As specified in the Identification for Electrical Systems section.
2. Install on outside of door.
3. Indicating:
    a. Panel designation.
    b. Voltage.
    c. Number of phases and configuration.

C. Circuit identification labels:

1. Provide index cards behind heavy clear plastic in cardholders on the inside of the doors.
2. Type all information on the cards using designations in the panel schedules.
3. Laminated on both sides.

D. Pad locking mechanism:
1. Provide a pad locking attachment to allow circuit breakers to be locked in the off position.
2. At a minimum, provide 1 mechanism per panelboard:
a. Provide multiple mechanisms if required to accommodate all circuit breaker frame sizes in the panelboard.

2.8 MIXES (NOT USED)

2.9 FABRICATION (NOT USED)

2.10 FINISHES

A. Finish stand-alone panelboards with a primer, rust-resistant phosphate undercoat, and 2 coats of oven-baked enamel with manufacturer's standard gray.

B. Finish panelboards mounted in motor control centers to match the motor control center finish and color.

2.11 SOURCE QUALITY CONTROL (NOT USED)

PART 3 EXECUTION

3.1 EXAMINATION (NOT USED)

3.2 PREPARATION (NOT USED)

3.3 INSTALLATION

A. As specified in the Common Work Results for Electrical section.

B. Install the equipment in accordance with the accepted installation instructions and anchorage details to meet the seismic and wind load requirements at the Project site.

C. General:
1. Surface, flush or MCC mounted as indicated on the Drawings.
2. Mount rigidly to structural members with exposed surfaces plumb and level to within 1/32 inch.
3. Perform work in accordance with the manufacturer's instructions and shop drawings.
4. Provide all brackets, hangers, supports, and hardware for mounting as required.
5. In all NEMA Type 4 and NEMA Type 4X locations, mount panelboards on 7/8-inch deep stainless steel preformed channel, with channel running vertically from top to bottom of panelboard:
a. Use only stainless steel mounting hardware.
6. Mount panelboard so that top operating handle is not more than 6 feet-7 inches above the operating floor.

3.4 ERECTION, INSTALLATION, APPLICATION, CONSTRUCTION (NOT USED)

3.5 REPAIR/RESTORATION (NOT USED)

3.6 RE-INSTALLATION (NOT USED)

3.7 COMMISSIONING

A. Factory testing:
   1. Perform standard factory tests on the panelboards:
   2. Test in accordance with the latest version of NEMA and UL standards.

3.8 FIELD QUALITY CONTROL

A. As specified in the Common Work Results for Electrical section.

3.9 ADJUSTING (NOT USED)

3.10 CLEANING

A. As specified in the Common Work Results for Electrical section.

3.11 PROTECTION

A. As specified in the Common Work Results for Electrical section.

3.12 SCHEDULES

A. Circuiting within the panelboard shall match the panel schedules as indicated on the Drawings.

B. Provide typewritten schedule in each panelboard.

END OF SECTION

SECTION 264720

PACKAGED POWER SUPPLY CENTER

PART 1 - GENERAL

1.1 SUMMARY

A. Section includes:
   1. Packaged power supply centers, a single integrated unit composed of:
      a. Primary main breaker.
      b. Dry-type transformer.
      c. Branch circuit panelboard with main breaker.

1.2 REFERENCES

A. As specified in the Common Work Results for Electrical section.

B. Underwriter's Laboratories, Inc. (UL):
   1. 50 - Standard for Enclosures for Electrical Equipment.
   2. 67 - Standards for Panelboards.

1.3 DEFINITIONS

A. As specified in the Common Work Results for Electrical section.

1.4 SYSTEM DESCRIPTIONS

A. Packaged power supplies centers are an integral unit that provides a means for:
   1. Transforming the distribution voltage level to the utilization voltage level.
   2. Primary and secondary protection for the transformer.
   3. Distribution of secondary power.

1.5 SUBMITTALS

A. Furnish submittals as specified in the Common Work Results for Electrical section.

B. Product data:
   1. Manufacturer.
   2. Bill of material.
   3. Assembly ratings including:
      a. Voltage.
      b. Phase/wire.
      c. Continuous current.
      d. Short circuit interrupting rating.
      e. Transformer kVA rating.
   4. NEMA enclosure type.
   5. Catalog sheets for circuit breakers contained within the panelboard.
   6. Cable terminal sizes based upon actual feeder and branch circuit conductors used.
   7. Furnish circuit breaker submittals as specified in the Low Voltage Molded Case Circuit Breakers section.
   8. For equipment installed in structures designated as seismic design category C, D, E, or F submit the following as specified in the Common Work Results for Electrical section:

a. Manufacturer’s statement of seismic qualification with substantiating test data.
b. Manufacturer’s special seismic certification with substantiating test data.

C. Shop drawings:
1. Including but not limited to:
a. Overall dimensions, interior panel dimensions, and wiring gutter dimensions:
1) Height.
2) Length.
3) Width.
b. Weight.
c. Anchoring locations.
d. Breaker layout drawing with dimensions:
1) Location of the main, branches, solid neutral, and ground.
e. Conduit entry/exit locations.
f. Individual panel schedules identifying breaker locations, ratings, and nameplate designations within the panelboard, for each and every panelboard.

D. Operations and maintenance manual:
1. Provide a complete manual for the operation and maintenance of the panelboard, circuit breakers, devices, and accessories including but not limited to:
a. Instruction narratives and bulletins.
b. Renewal parts lists.

E. Calculations:
1. Detailed calculations or details of the actual physical testing performed on the packaged power supply center to prove suitability for the seismic requirements at the Project Site as specified in the Common Work Results for Electrical section.

F. Installation instructions:
1. Detail the complete installation of the equipment including rigging, moving, and setting into place.
2. For equipment installed in structures designated as seismic design category A or B:
a. Provide manufacturer’s installation instructions and anchoring details for connecting equipment to supports and structures.
3. For equipment installed in structures designated as seismic design category C, D, E, or F:
a. Provide project-specific installation instructions and anchoring details based on support conditions and requirements to resist seismic and wind loads as specified in the Common Work Results for Electrical section.
b. Submit anchoring drawings with supporting calculations.
c. Drawings and calculations shall be stamped by a professional engineer registered in the state where the Project is being constructed.

1.6 QUALITY ASSURANCE

A. As specified in the Common Work Results for Electrical section.

B. Packaged power supply centers shall be UL listed and labeled.
1. Where indicated as service entrance equipment, packaged power supply centers shall be UL labeled and listed “Suitable for Service Entrance.”

1.7 DELIVERY, STORAGE, AND HANDLING

A. As specified in the Common Work Results for Electrical section.

1.8 PROJECT OR SITE CONDITIONS

A. As specified in the Common Work Results for Electrical section.

1.9 SEQUENCING (NOT USED)

1.10 SCHEDULING (NOT USED)

1.11 WARRANTY

A. As specified in the Common Work Results for Electrical section.

1.12 SYSTEM START-UP

A. As specified in the Common Work Results for Electrical section.

1.13 OWNER'S INSTRUCTIONS (NOT USED)

1.14 MAINTENANCE (NOT USED)

PART 2 - PRODUCTS

2.1 MANUFACTURERS

A. One of the following or equal:
   1. Eaton.
   2. Schneider Electric.
   3. General Electric Co.

2.2 EXISTING PRODUCTS (NOT USED)

2.3 MATERIALS (NOT USED)

2.4 MANUFACTURED UNITS (NOT USED)

2.5 EQUIPMENT

A. Enclosure:
   1. Enclose entire unit including panelboard bus assembly, main breakers, and transformer in a galvanized steel cabinet:
      a. Rated NEMA Type 3R, suitable for outdoor use.
      b. Steel gauge in accordance with UL 50.
      c. Wire gutter space in accordance with UL 67.
   2. Hinged access door:
      a. Maintained in open position when desired.
      b. With padlock provisions to prevent unauthorized entry.
   3. Dead-front panelboard construction.

B. Panelboard:
   1. Bus:
      a. General:
         1) Tin-plated copper.
      b. Phase bus:
         1) Fully rated for the associated transformer.

2) Full size without reduction.
c. Neutral bus:
1) Ampere rating to match phase bus.
2) Provide with suitable lugs for the maximum number of circuits that can be connected to the panel.
d. Ground bus:
1) Provide suitable lug space to provide a lug for each circuit including spaces.
2. Label panelboards with UL short circuit current rating.

2.6 COMPONENTS

A. Primary and secondary main breakers:
1. Sized to protect the transformer.
2. Integrally mounted and wired.
3. Provide as specified in the Low Voltage Molded Case Circuit Breakers section.
4. Minimum interrupting rating as indicated on the Drawings, but not less than:
a. Primary main breaker: 480 VAC, 65,000 AIC.
b. Secondary main breaker: As shown on the drawings, 10,000 AIC.

B. Branch circuit breakers:
1. As specified in the Low Voltage Molded Case Circuit Breakers section.
2. Match circuit breaker arrangement to the panel schedules as indicated on the Drawings.
3. Circuit breakers shall not be restricted to any mounting location due to their physical size.
4. Install circuit breakers such that they can be replaced without disturbing adjacent units.
a. Provide wire connectors suitable for wire sizes indicated on the Drawings.

C. Transformer:
1. General:
a. Minimum of two 5 percent full capacity primary taps below normal.
b. Insulation:
1) Insulating materials for a 185-degree Celsius UL component recognized insulation system.
2) 115 degrees Celsius temperature rise above 40 degrees Celsius maximum ambient.
c. Fully encapsulated using a sand-epoxy resin mixture to provide maximum protection against moisture, dust, and corrosive environments.
2. Configuration:
a. Single- or 3-phase, as indicated on the Drawings.
b. kVA rating as indicated on the Drawings.
c. Primary voltage: 480 VAC.
d. Secondary voltage: As indicated on the Drawings.

2.7 ACCESSORIES

A. Provide nameplates as specified in the Identification for Electrical Systems section.

B. Circuit identification labels:
1. Index cards behind heavy clear plastic in card holders on inside of doors:
a. Type all information on cards.
2. Laminated on both sides.
3. Circuit identification to follow panel schedules as indicated on the Drawings.

C. Device locking mechanisms:

1. Provide a handle lock-off device for each circuit breaker that acts as an equipment or control panel disconnect.
2. Provide a handle lock-on device for each circuit breaker that acts as critical power systems breakers.

2.8 MIXES (NOT USED)

2.9 FABRICATION (NOT USED)

2.10 FINISHES (NOT USED)

2.11 SOURCE QUALITY CONTROL (NOT USED)

PART 3 - EXECUTION

3.1 EXAMINATION (NOT USED)

3.2 PREPARATION (NOT USED)

3.3 INSTALLATION

A. As specified in the Common Work Results for Electrical section.

B. Install the equipment in accordance with the accepted installation instructions and anchorage details to meet the seismic and wind load requirements at the Project site.

C. Provide any and all necessary brackets, hangers, supports, and hardware for mounting in the location as indicated on the Drawings.

D. In all wet and damp locations, mount assembly on 7/8-inch deep stainless steel preformed mounting channel:
1. The channel shall run vertically from top to bottom of unit.

3.4 ERECTION, INSTALLATION, APPLICATION, CONSTRUCTION (NOT USED)

3.5 REPAIR/RESTORATION (NOT USED)

3.6 RE-INSTALLATION (NOT USED)

3.7 COMMISSIONING

A. As specified in the Commissioning section.

3.8 FIELD QUALITY CONTROL

A. As specified in the Common Work Results for Electrical section.

3.9 ADJUSTING

A. Set transformer taps as required.

3.10 CLEANING

A. As specified in the Common Work Results for Electrical section.

3.11 PROTECTION

A. As specified in the Common Work Results for Electrical section.

3.12 SCHEDULES (NOT USED)

END OF SECTION

SECTION 265100

LIGHTING: LED LUMINAIRES

PART 1 GENERAL

1.1 SUMMARY

A. Section includes: LED luminaires, drivers, poles, and accessories.

1.2 REFERENCES

A. As specified in the Common Work Results for Electrical section.

B. Illuminating Engineering Society of North America (IESNA):
   1. LM-79 - IES Approved Method for the Electrical and Photometric Measurements of Solid-State Lighting Products.
   2. LM-80 - IES Approved Method: Measuring Lumen Maintenance of LED Light Sources.
   3. TM-21 - Projecting Long Term Lumen Maintenance of LED Light Sources.

C. Institute of Electrical and Electronics Engineers (IEEE):
   1. C62.41 - IEEE Recommended Practice for Surge Voltages in Low-Voltage AC Power Circuits.

D. National Electrical Manufacturers Association (NEMA):
   1. 410 - Performance Testing for Lighting Controls and Switching Devices with Electronic Drivers and Discharge Ballasts.

E. Underwriters Laboratories (UL):
   1. 1598 - Luminaires.
   2. 8750 - Light Emitting Diode (LED) Equipment For Use In Lighting Products.

1.3 DEFINITIONS

A. As specified in the Common Work Results for Electrical section.

B. Specific definitions and abbreviations:
   1. CCT: Correlated color temperature - Scientific scale to describe how “warm” or how “cool” the light source is, measured in Kelvin. The lower the Kelvin temperature, the warmer the light feels, or appears.
   2. CRI: Color Rendering Index - A quantitative measure of the ability of a light source to reveal the colors of various objects faithfully in comparison with an ideal or natural light source.
   3. Driver - Device that manages power and controls the current flow from AC to DC for an LED lighting product.
   4. Efficacy - Lumen output of a light source per unit of power supplied to that source (lumens per watt).
   5. EMI: Electromagnetic Interference - Electrical interference (noise) generated by electrical and electronic devices.
   6. FC: Foot Candles - Measure of light level on a surface being illuminated.
   7. L70 - The extrapolated life in hours of the luminaire when the luminous output depreciates 30 percent from initial values.
   8. LED: Light emitting diode - A solid-state semiconductor device that produces light when electrical current flows through it.

9. LED light source - See LED luminaire.
10. LED luminaire - A complete lighting unit consisting of LED-based light emitting elements and a matched driver together with parts to distribute light, to position and protect the light emitting elements, and to connect the unit to a branch circuit.
11. Lumen - The international (SI) unit of luminous flux or quantity of light. The amount of light that is spread over a square foot of surface by one candle power when all parts of the surface are exactly one foot from the light source.
12. Lumen ambient temperature multiplier - LED light source relative lumen output when compared to a standard ambient temperature.
13. Lumen maintenance factor - How well an LED light source is able to retain its intensity when compared to new.
14. Luminaire - Lighting unit.
15. THD: Total harmonic distortion - The combined effect of harmonic Distortion on the AC waveform produced by a driver or other device.

1.4 SUBMITTALS

A. Furnish submittals as specified in the Common Work Results for Electrical section.

B. Product data:
   1. LED Luminaires:
      a. Catalog literature for each luminaire specified, cross-referenced to the luminaire type on the Luminaire Schedule in the Drawings.
      b. Provide for each luminaire type:
         1) Materials.
         2) Type of diffuser.
         3) Hardware.
         4) Gasketing.
         5) Reflector.
         6) Chassis.
         7) Finish and color.
         8) Driver type and protection.
         9) LED luminaire:
            a) Initial lumen output at 40 degrees Celsius ambient.
            b) Correlated color temperature.
            c) Lumen maintenance factors.
            d) Lumen ambient temperature multipliers.
            e) Drive current.
            f) Efficacy.
         10) Picture of luminaire.
         11) IES optical distributions.
         12) Dimensioned drawings:
            a) Effective projected area rating for pole mounted luminaires.
         13) Weight.
         14) Photometric data:
            a) Coefficient of utilization tables based on the IES zonal cavity system by an approved testing laboratory.
            b) Luminaire dirt depreciation factor.
            c) Candlepower distribution curves.
            d) Average luminaire brightness.
            e) Lumen output charts.
         15) Furnish support method for interior luminaires weighing more than 30 pounds and all wall-mounted luminaires:
            a) Support methods shall be based on seismic requirements at the project site as specified in the Common Work Results for Electrical section.

c. Luminaire substitutions:
    1) Provide complete literature for each luminaire substitution:
    2) Submittals for substituted luminaires shall be sufficient for competent comparison of the proposed luminaire to the originally specified luminaire:
        a) Photometric data:
            (1) IES file in standard IES format.
            (2) Coefficient of utilization tables based on the IES zonal cavity system by an approved testing laboratory.
            (3) Candlepower distribution curves.
            (4) Average luminaire brightness.
            (5) Lumen output charts.
            (6) Power requirements in watts and volt-amperes.
        b) Calculations:
            (1) Provide software generated calculations showing illuminance levels in footcandles and power usage in watts per square foot for each of the areas in which substitutions are proposed:
                (a) Use surface reflectance values and luminaire light loss factors approved by the Engineer to perform all calculations.
        c) Specification sheets:
            (1) If lacking sufficient detail to indicate compliance with contract documents, standard specification sheets will not be accepted. This includes, but is not limited to, luminaire type designation, manufacturer's complete catalog number, voltage, LED type, CCT, CRI, specific driver information, system efficacy, L70 life rating, and any modifications necessary to meet the requirements of the contract documents.
    3) Substitutions for specified luminaires will be evaluated upon quality of construction, light distribution, energy use, appearance, and maintenance.
    4) Substitutions shall comply with all applicable building and energy codes.
2. Driver: Provide for each driver type:
    a. Catalog number.
    b. Type of driver.
    c. Output wattage.
    d. Input voltage.
    e. Operating voltage range.
    f. Maximum input power.
    g. Efficiency.
    h. Operating line current.
    i. Power factor.
    j. Operating temperature range.
    k. Current output range in ambient temperatures of 30 to 55 degrees Celsius.
    l. Surge suppression data.

C. Record documents:
    1. Update the Luminaire Schedule in the Drawings to reflect the acceptable substitutions, after the substitution has been reviewed and accepted by the Engineer.

1.5 QUALITY ASSURANCE

A. As specified in the Common Work Results for Electrical section.

1.6 DELIVERY, STORAGE, AND HANDLING

A. As specified in the Common Work Results for Electrical section.

1.7 PROJECT OR SITE CONDITIONS

A. As specified in the Common Work Results for Electrical section.

1.8 SEQUENCING (NOT USED)

1.9 SCHEDULING

A. Exterior and outdoor lighting system operation shall be demonstrated during the hours of darkness.

B. Lighting demonstration shall occur within 2 weeks before substantial completion.

1.10 WARRANTY

A. As specified in the Common Work Results for Electrical section.

B. LED luminaire:
   1. 5 year warranty from the date of installation including material, workmanship, photometrics, driver, and LED modules.

1.11 SYSTEM START-UP

A. As specified in the Common Work Results for Electrical section.

1.12 OWNER'S INSTRUCTIONS (NOT USED)

1.13 MAINTENANCE

A. Furnish 1 complete spare LED luminaire, with driver, of each type used.

PART 2 PRODUCTS

2.1 MANUFACTURERS

A. Luminaires:
   1. The following or equal:
      a. As noted on the Luminaire Schedule.

B. Drivers:
   1. One of the following or equal:
      a. Philips Advance.
      b. Thomas Research.
      c. eldoLED.

C. Substitutions:
   1. The lighting design and luminaire selection has been based upon the photometric data of the identified luminaire. It is the Contractor's responsibility to ensure and prove to the Engineer at time of submittal the substitutions meet the quality and photometric requirements of the original design.

2.2 SYSTEM DESCRIPTION

A. Provide luminaires, and accessories for all lighting systems, complete and operable, in accordance with the requirements of the Contract Documents.

B. Individual luminaire types are indicated on the Drawings and on the Luminaire Schedule.

2.3 EXISTING PRODUCTS (NOT USED)

2.4 MATERIALS (NOT USED)

2.5 MANUFACTURED UNITS (NOT USED)

2.6 EQUIPMENT

A. LED Luminaires:
   1. General:
      a. Pre-wired with leads of 18-AWG, minimum, for connection to building circuits.
      b. Provide the luminaires furnished per the Luminaire Schedule in the Drawings:
         1) The Specifications noted in this Section are an addition or supplement to the Luminaire Schedule.
      c. Individual LEDs connected such that a catastrophic loss or the failure of 1 LED will not result in the loss of the entire luminaire.
   2. Minimum ambient temperature range of 0 degrees Celsius to 40 degrees Celsius.
   3. Minimum rated life:
      a. Office Areas: 70,000 hours when operated at 25 degrees Celsius.
      b. Process Areas: 60,000 hours when operated at 40 degrees Celsius.
      c. Hazardous Areas: 50,000 hours when operated at 40 degrees Celsius.
   4. Minimum efficacy of 70 lumens/watt.
      a. Hazardous Areas: Minimum 60 lumens/watt.
   5. Minimum Color Rendering Index of 70.
   6. Tested according to IESNA LM-79 and LM-80.
   7. Lumen maintenance projection in accordance with IESNA TM-21.
   8. RoHS compliant.
   9. Integral driver.
   10. Suitable for dry, damp, or wet locations as indicated on the Drawings or on the Luminaire Schedule.
      a. Wet or damp locations: UL 1598 listed.
   11. Designed as a complete LED assembly. Retrofit LED lamps in luminaires not designed specifically for LED light sources shall not be used.
   12. Exterior/outdoor luminaires:
      a. Luminaires in combination with their mounting pole and bracket shall be capable of withstanding:
         1) Wind levels at the project site without damage.
         2) Seismic levels at the project site.
      b. Corrosion-resistant hardware and hinged doors or lens retainer.
      c. Luminaires furnished with integral photoelectrical control shall be of the luminaire manufacturer's standard design.

B. Drivers:
   1. Dimmable, with dimming signal protocol of 0-10 VDC or DALI.
   2. Input power source:
      a. As indicated on the Drawings.
   3. Drive current:
      a. As indicated in the Luminaire Schedule.
   4. Power factor: greater than 0.90.

5. Efficiency: greater than 80 percent.
6. Total harmonic distortion (THD) of the input current less than 20 percent.
7. Rated life of 60,000 hours in an LED luminaire operated at an ambient temperature of 40 degrees Celsius.
8. Minimum operating temperature of 0 degrees Celsius.
9. Sound rating: Class A+ or quieter.
10. UL listed Class 2 Outdoor in accordance with UL 8750.
11. In accordance with IEEE C62.41 Category A for transient protection.
12. Driver must limit inrush current:
    a. Meet or exceed NEMA 410 driver inrush standard:
        1) 230 Amps per 10 Amp load with a maximum of 106 Amps squared-seconds at 120V.
        2) 430 Amps per 10 Amp load with a maximum of 370 Amps squared-seconds at 277V.

2.7 COMPONENTS

2.8 ACCESSORIES (NOT USED)

2.9 MIXES (NOT USED)

2.10 FABRICATION (NOT USED)

2.11 FINISHES (NOT USED)

2.12 SOURCE QUALITY CONTROL (NOT USED)

PART 3 EXECUTION

3.1 EXAMINATION (NOT USED)

3.2 PREPARATION (NOT USED)

3.3 INSTALLATION

A. As specified in the Common Work Results for Electrical section.

B. Install luminaires per the manufacturer's guidelines and submitted installation calculations to meet seismic and wind requirements at the project site.

C. Special techniques:
1. Support luminaires from structural elements capable of carrying the total weight.
2. Install luminaires plumb and square with building and wall intersections:
    a. Suspend pendant-mounted luminaries that are mounted from sloping ceilings with ball hangers, unless otherwise indicated on the Drawings.
    b. Install luminaires in machinery rooms after machines have been installed, so as to ensure no conflict with machinery, piping, or ductwork.
3. In all cases, coordinate luminaire locations with work of other trades to prevent obstruction of light from the fixtures:
    a. Locate bottom of luminaire approximately at the bottom of ductwork, unless otherwise specified or indicated on the Drawings.
4. Support luminaires weighing more than 25 pounds independently of the outlet box and the conduit.

5. Provide ceiling or pendent mounted luminaires with a safety chain connecting the lens, driver, and other components to the building structure.
6. Provide recessed luminaires with auxiliary safety supports attached directly to the building structure:
    a. The safety supports shall consist of number 12 AWG soft drawn galvanized wires.
7. Install luminaires in accordance with the architectural reflected ceiling Drawings:
    a. Center luminaires on ceiling tiles unless otherwise indicated.
8. Support luminaires installed in suspended grid ceilings, independently of the grid:
    a. Provide seismic restraint clips for all luminaires installed in suspended grid ceilings.

3.4 ERECTION, INSTALLATION, APPLICATION, CONSTRUCTION (NOT USED)

3.5 REPAIR/RESTORATION (NOT USED)

3.6 RE-INSTALLATION (NOT USED)

3.7 COMMISSIONING (NOT USED)

3.8 FIELD QUALITY CONTROL

A. As specified in the Common Work Results for Electrical section.

3.9 ADJUSTING

A. Aim and verify all exterior and outdoor luminaires alignment, during dark evening hours, as directed by Owner or the Engineer.

3.10 CLEANING

A. As specified in the Common Work Results for Electrical section.

B. Clean all lenses, diffusers, and reflectors.

C. Refinish all luminaires' trim, poles, and support brackets, where finish has been damaged.

D. Clean all LED luminaires (new and old), used during construction for construction lighting, before substantial completion.

3.11 PROTECTION

A. As specified in the Common Work Results for Electrical section.

3.12 SCHEDULES

A. Refer to the Luminaire Schedule in the Drawings.

END OF SECTION

THIS PAGE INTENTIONALLY LEFT BLANK FOR DOUBLE SIDED PRINTING

SECTION 266700

LIGHTNING PROTECTION

PART 1 GENERAL

1.1 SUMMARY

A. Section includes:
   1. Design and installation of a complete lightning protection system.
   2. Materials and components for the lightning protection system.

1.2 REFERENCES

A. As specified in the Common Work Results for Electrical section.

B. Lightning Protection Institute (LPI).
   1. 175 - Standard for the Design - Installation - Inspection of Lightning Protection Systems.
   2. 177 - Inspection Guide for Certified Systems.

C. National Electrical Code (NEC).

D. National Fire Protection Association (NFPA):
   1. 780 - Standard for the Installation of Lightning Protection Systems.

E. Underwriters Laboratories, Inc. (UL):
   1. 96 - Standard for Lightning Protection Components.
   2. 96A - Standard for Installation Requirements for Lightning Protection Systems.

1.3 DEFINITIONS

A. As specified in the Common Work Results for Electrical section.

B. Specific definitions:
   1. LPI: Lightning Protection Institute.

1.4 SYSTEM DESCRIPTION

A. Retain the services of a lightning protection contractor to design, furnish, and install a complete lightning protection system, connected to the facility grounding system.

B. Lightning protection system: NFPA 780; UL 96A master labeled or LPI certified system(s) consisting of:
   1. Air terminals on roof(s).
   2. Bonding.
   3. Grounding electrodes.
   4. Interconnecting conductors.

C. Connect the lightning protection system to the facility grounding electrode:
   1. Provide common ground connections as necessary to the electric and telephone service conductors.

D. The installing contractor is responsible for all costs associated with UL or LPI application/inspection of the lightning protection system, including any costs associated with re-inspection necessary to obtain the UL 96A Master Label or LPI 177 Certification.

1.5 SUBMITTALS

A. Furnish submittals as specified in the Common Work Results for Electrical section.

B. Product data:
   1. Provide samples and pertinent catalog data for:
      a. Air terminals.
      b. Conductors.
      c. Connectors.
      d. Accessories.
      e. Include dimensions and materials of each component, and include indication of listing in accordance with UL 96.

C. Shop drawings:
   1. Including but not limited to:
      a. Layout of air terminals with the respective configuration of the zone of protection.
      b. Grounding electrodes, and bonding connections to structure and other metal objects.
      c. Type, size and locations for:
         1) Terminal.
         2) Electrode.
         3) Conductor.
      d. Conductor routing details.
      e. Connection details.
      f. Termination details.
      g. Applicable air terminal and other calculations.
   2. Details showing installation of air terminals, conductors, and connectors.

D. Certificates:
   1. Submit written confirmation of having obtained UL Master Label or LPI certification for each lightning protection system.
   2. Photocopy of UL or LPI Installers' Certificate(s) for installation of lightning protection systems.
   3. Proof of the manufacturer has been UL-listed for at least 5 years.
   4. Proof of the installer has been UL-listed or LPI-certified for at least 5 years.

E. Record Documents:
   1. Provide Record Documents as specified in the Closeout Procedures section and the Common Work Results for Electrical section.
   2. Accurately record actual locations of air terminals, grounding electrodes, bonding connections, and routing of system conductors.
   3. Manufacturer's installation instructions.

1.6 QUALITY ASSURANCE

A. As specified in the Common Work Results for Electrical section.

B. Conform to the requirements of the UL or LPI and NFPA standards for lightning protection systems:
   1. Components shall be listed in accordance with UL 96.

C. Manufacturer’s qualifications:
   1. Company specializing in lightning protection equipment with minimum 5 years of experience:
      a. Listed in section "Lightning Conductor, Air Terminals and Fittings" of the UL "Electrical Construction Materials Directory" for at least 5 years previous to this Contract's bid opening date.

D. Installers qualifications: Member of the UL quality control program listed in section "Lightning Protection Installation" of the UL "Electrical Construction Materials Directory" or LPI-certified installer for installation of lightning protection systems for at least 5 years previous to this Contract's bid opening date. The lightning protection system shall meet the applicable requirements of NFPA 780 and UL 96 and 96A or LPI 175 and 177.

E. Upon completion of installation the lightning protection contractor to have the building lightning system physically inspected by UL or in accordance with LPI requirements:
   1. Furnish a UL Master Label or LPI Installer Certified for the building:
      a. Application for the UL Master Label without a physical inspection by UL is unacceptable.

1.7 DELIVERY, STORAGE, AND HANDLING

A. As specified in the Common Work Results for Electrical section.

1.8 PROJECT OR SITE CONDITIONS (NOT USED)

1.9 SEQUENCING

A. Pre-installation conference:
   1. Convene a pre-installation conference before commencing the Work of this Section.

B. Coordinate Work with other trades to ensure neat, correct, and unobtrusive installation.

C. Coordinate the Work of this Section with roofing and exterior and interior finish installations.

1.10 SCHEDULING (NOT USED)

1.11 WARRANTY

A. As specified in the Common Work Results for Electrical section.

1.12 SYSTEM START-UP

A. As specified in the Common Work Results for Electrical section.

1.13 OWNER’S INSTRUCTIONS (NOT USED)

1.14 MAINTENANCE (NOT USED)

PART 2 PRODUCTS

2.1 MANUFACTURERS

A. One of the following or equal:
   1. Erico.
   2. Thompson Lightning Protection, Inc.

3. Harger Lightning and Grounding.
4. VFC, Inc.

2.2 EXISTING PRODUCTS (NOT USED)

2.3 MATERIALS

A. Air terminals:
   1. Material: Aluminum.
      a. Aluminum components for aluminum roofing, compatible with aluminum roofing materials.
   2. Size: 3/8-inch by 18-inch minimum extending a minimum of 12 inches above the object to be protected.
   3. On flat or walkable roofs, provide air terminals with:
      a. Mushroom type blunt tip incapable of impalement if fallen upon.
      b. Spring mounted and capable of being pushed flush to the roof.
   4. Air terminals on stacks and chimneys:
      a. Protected from corrosion.
      b. Sized in accordance with UL and NFPA requirements.
      c. Lead-coated copper.
   5. Air terminal bases:
      a. Cast bronze with bolt pressure cable connections securely mounted with stainless steel screws and bolts.

B. Ground rods and below grade connectors:
   1. As specified in the Grounding and Bonding section.

C. Ground plate: Copper.

D. Conductors:
   1. Perimeters:
      a. Aluminum.
         1) Aluminum components for aluminum roofing, compatible with aluminum roofing materials.
   2. Down conductors:
      a. Copper.
   3. Sized in accordance with UL or LPI and NFPA requirements.
   4. UL listed for the application.

E. Cable fasteners:
   1. Electrolytically compatible with conductors and mounting surface:
      a. Spaced in accordance with LPI or NFPA requirements.

F. Above grade connectors:
   1. Make connections between dissimilar metals with approved bimetallic connectors.
   2. Installed by trained personnel.
   3. UL listed for the application.

G. Miscellaneous materials:
   1. Copper of type and size recommended by the manufacturer of the lightning protection system.
   2. Stainless steel bolts, screws, and other threaded fasteners.

2.4 MANUFACTURED UNITS (NOT USED)

2.5 EQUIPMENT (NOT USED)

2.6 COMPONENTS (NOT USED)

2.7 ACCESSORIES (NOT USED)

2.8 MIXES (NOT USED)

2.9 FABRICATION (NOT USED)

2.10 FINISHES (NOT USED)

2.11 SOURCE QUALITY CONTROL (NOT USED)

PART 3 EXECUTION

3.1 EXAMINATION

A. It is the responsibility of the lightning protection subcontractor to review the electrical system design, and provide any and all additional equipment and materials needed in order to construct a master labeled UL or LPI certified lightning protection system.

B. Verify that surfaces are ready to receive work.

C. Protect elements surrounding Work of this Section from damage or disfiguration.

3.2 PREPARATION (NOT USED)

3.3 INSTALLATION

A. As specified in the Common Work Results for Electrical section.

B. Install systems in accordance with manufacturer's instructions unless otherwise specified in this Section.

C. Installation must be made by a LPI certified master installer or an UL certified installer.

D. Conductor installations:
1. Install the lightning protection roof system(s) grounding and bending conductors exposed on flat roof areas and concealed at ridge roof areas.
2. Install main downleads completely concealed and sleeved.
3. Other than for the purpose of protecting downlead conductors from damage up to 6 feet above grade level, do not use exposed conduits to conceal the downleads on the exterior of the outside walls.
4. Use minimum 1-inch PVC conduits to protect lightning system conductors from damage.

E. Clearances: Ensure 6-foot minimum distance required by NEC:
1. From lightning rod conductors to non-current-carrying metal parts of electrical equipment unless they are bonded to the rods.
2. From lightning system conductors to open conductors of communication systems.
3. From lightning protection grounding electrodes to electrodes of other grounding systems.

F. Extend air terminals a minimum of 12 inches above object to be protected.

G. Maintain horizontal or downward coursing of main conductor and ensure that bends have at least an 8-inch radius and that no bend of a conductor forms an included angle of less than 90 degrees.

H. Grounding electrode system:
   1. Where a grounding electrode system is indicated on the Drawings, modify the installation to meet the applicable lightning protection standards.
      a. Provide additional electrodes where required.
   2. Where a grounding electrode system is not indicated on the Drawings, install grounding electrodes per the applicable UL or LPI standards.

I. Interconnection of metals:
   1. Bond all metal bodies within 6 feet of the conductor to the system with approved fittings and conductor.
   2. Connections between dissimilar metals shall be made with approved bimetallic connections.
   3. Bond metal bodies of inductance located within 6 feet of a conductor or object with secondary bonds.

J. Bond all isolated metallic bodies at or below the roof subject to inductance and within 6 feet of lightning protection system conductors.

K. Provide necessary common grounds between the lightning protections system and the electric and telephone service entrance wires, TV and radio antenna grounds.

L. Ensure that air terminals are installed to withstand calculated wind force due to 100 miles per hour winds or as specified in the Wind Design Criteria section, whichever is greater with a 1.3 gust factor without structural damage and without damage to integrity of the lightning protection system.

3.4 ERECTION, INSTALLATION, APPLICATION, CONSTRUCTION (NOT USED)

3.5 REPAIR/RESTORATION (NOT USED)

3.6 REINSTALLATION (NOT USED)

3.7 COMMISSIONING

A. As specified in the Commissioning section.

3.8 FIELD QUALITY CONTROL

A. As specified in the Common Work Results for Electrical section.

B. Provide one of the following:
   1. The services of UL to physically inspect the entire lightning protection system and issue the UL Master Label:
      a. Furnish UL Master Label as evidence that the installation has met with UL 96A code requirements.
   2. Obtain LPI system certification reports and LPI system certification.

3.9 ADJUSTING (NOT USED)

3.10 CLEANING (NOT USED)

3.11 PROTECTION

A. As specified in the Common Work Results for Electrical section.

3.12 SCHEDULES (NOT USED)

END OF SECTION

THIS PAGE INTENTIONALLY LEFT BLANK FOR DOUBLE SIDED PRINTING

SECTION 269500

FIELD ELECTRICAL ACCEPTANCE TESTS

PART 1- GENERAL

1.1 SUMMARY

A. Section includes:
1. Responsibilities for testing the electrical installation.
2. Adjusting and calibration.
3. Acceptance tests.

B. Copyright information:
1. Some portions of this Section are copyrighted by the InterNational Electrical Testing Association, Inc. (NETA). See NETA publication ATS for details.

1.2 REFERENCES

A. As specified in the Common Work Results for Electrical section.

B. American National Standards Institute (ANSI).

C. ASTM International (ASTM):
1. D877 - Standard Test Method for Dielectric Breakdown Voltage of Insulating Liquids Using Disk Electrodes.
2. D923 - Standard Practices for Sampling Electrical Insulating Liquids.
3. D924 - Standard Test Method for Dissipation Factor (or Power Factor) and Relative Permittivity (Dielectric Constant) of Electrical Insulating Liquids.
4. D971 - Standard Test Method for Interfacial Tension of Oil Against Water by the Ring Method.
5. D974 - Standard Test Method for Acid and Base Number by Color-Indicator Titration.
6. D1298 - Standard Test Method for Density, Relative Density, or API Gravity of Crude Petroleum and Liquid Petroleum Products by Hydrometer Method.
7. D1500 - Standard Test Method for ASTM Color of Petroleum Products (ASTM Color Scale).
8. D1524 - Standard Test Method for Visual Examination of Used Electrical Insulating Liquids in the Field.
9. D1816 - Standard Test Method for Dielectric Breakdown Voltage of Insulating Liquids Using VDE Electrodes.
10. D2285 - Standard Test Method for Interfacial Tension of Electrical Insulating Oils of Petroleum Origin Against Water by the Drop Weight Method.
11. D3612 - Standard Test Method for Analysis of Gases Dissolved in Electrical Insulating Oil by Gas Chromatography.

D. Institute of Electrical and Electronics Engineers (IEEE):
1. 43 - IEEE Recommended Practice for Testing Insulation Resistance of Rotating Machinery.
2. 81 - IEEE Guide for Measuring Earth Resistivity, Ground Impedance, and Earth Surface Potentials of a Grounding System.
3. 95 - IEEE Recommended Practice for Insulation Testing of AC Electric Machinery (2300 V and Above) With High Direct Voltage.
4. 421.3 - IEEE Standard for High-Potential Test Requirement for Excitation Systems for Synchronous Machines.

5. 450 - IEEE Recommended Practice for Maintenance, Testing, and Replacement of Vented Lead-Acid Batteries for Stationary Applications.
6. 1106 - IEEE Recommended Practice for Installation, Maintenance, Testing, and Replacement of Vented Nickel-Cadmium Batteries for Stationary Applications.
7. 1188 - IEEE Recommended Practice for Maintenance, Testing, and Replacement of Valve-Regulated Lead-Acid (VRLA) Batteries for Stationary Applications.
8. C57.13 - IEEE Standard Requirements for Instrument Transformers.
9. C57.13.1 - IEEE Guide for Field Testing of Relaying Current Transformers.
10. C57.13.3 - IEEE Guide for Grounding of Instrument Transformer Secondary Circuits and Cases.
11. C57.104 - IEEE Guide for the Interpretation of Gases Generated in Oil-Immersed Transformers.

E. Insulated Cable Engineer's Association (ICEA).

F. InterNational Electrical Testing Association (NETA).
1. ATS- Standard for Standard for Acceptance Testing Specifications for Electrical Power Equipment and Systems.

G. International Electrotechnical Commission (IEC).

H. Manufacturer's testing recommendations and instruction manuals.

I. National Fire Protection Association (NFPA):
1. 70 - National Electrical Code (NEC).
2. 110 - Standard for Emergency and Standby Power Systems.

J. National Institute of Standards and Technology (NIST).

K. Specification sections for the electrical equipment being tested.

L. Shop drawings.

1.3 DEFINITIONS

A. As specified in the Commissioning section and the Common Work Results for Electrical section.

B. Specific definitions:
1. Testing laboratory: The organization performing acceptance tests.

1.4 SYSTEM DESCRIPTION

A. Testing of all electrical equipment installed under this Contract in accordance with the manufacturer's requirements and as specified in this Section.

B. The testing and inspections shall verify that the equipment is operational within the tolerances required and expected by the manufacturer, and these Specifications.

C. Responsibilities:
1. Contractor responsibilities:
a. Ensure that all resources are made available for testing, and that all testing requirements are met.
2. Electrical subcontractor responsibilities:
a. Perform routine tests during installation.

b. Demonstrate operation of electrical equipment.
c. Commission the electrical installation.
d. Provide the necessary services during testing, and provide these services to the testing laboratory, Contractor, and other subcontractors, including but not limited to:
    1) Providing electrical power as required.
    2) Operating of electrical equipment in conjunction with testing of other equipment.
    3) Activating and shutting down electrical circuits.
    4) Making and recording electrical measurements.
    5) Replacing blown fuses.
    6) Installing temporary jumpers.

3. Testing laboratory responsibilities:
    a. Perform all acceptance tests specified in this Section.
    b. Provide all required equipment, materials, labor, and technical support during acceptance tests.

1.5 SUBMITTALS

A. Furnish submittals as specified in the Common Work Results for Electrical section.

B. LAN cable test form:
1. LAN cable test reports:
    a. Submit 3 copies of test reports showing the results of all tests specified in this Section:
        1) Test type.
        2) Test location.
        3) Test date.
        4) Cable number.
        5) Cable length.
        6) Certification that the cable meets or exceeds the specified standard.
    b. Furnish hard copy and electronic copy for all traces.

C. Manufacturers' testing procedures:
1. Submit manufacturers' recommended testing procedures and acceptable test results for review by the Engineer prior to beginning testing.

D. Test report:
1. Include the following:
    a. Summary of Project.
    b. Description of equipment tested.
    c. Description of tests performed.
    d. Test results.
    e. Conclusions and recommendations.
    f. Completed test forms.
    g. List of test equipment used and calibration dates.
    h. LAN cable test reports.

E. Test data records:
1. Include the following:
    a. Identification of the testing organization.
    b. Equipment identification.
    c. Nameplate data.
    d. Humidity, temperature and or other conditions that may affect the results of the tests and or calibrations.
    e. Dates of inspections, tests, maintenance and or calibrations.

f. Indication of the inspections, tests, maintenance, and or calibrations to be performed and recorded.
g. Expected results when calibrations are to be performed.
h. Indication of as-found and as-left results as applicable.
i. Indication of all test results outside specified tolerances.

F. Testing laboratory qualifications:
1. Submit a complete resume and statement of qualifications from the proposed testing laboratory detailing their experiences in performing the tests specified:
a. This statement will be used to determine whether the laboratory is acceptable, and shall include:
1) Corporate history and references.
2) Resume of individual performing test.
3) Equipment list and test calibration data.

G. Division of responsibilities:
1. Submit a list identifying who is responsible for performing each portion of the testing.

1.6 QUALITY ASSURANCE

A. As specified in the Common Work Results for Electrical section.

B. Testing laboratory qualifications:
1. The testing laboratory may be qualified testing personnel from the electrical subcontractor's staff or an independent testing company.
2. NETA certification required.
3. Selection of the testing laboratory and testing personnel is subject to approval by the Engineer based on testing experience and certifications of the individuals and testing capabilities of the organization.

1.7 DELIVERY, STORAGE, AND PROTECTION (NOT USED)

1.8 PROJECT OR SITE CONDITIONS

A. As specified in the Common Work Results for Electrical section.

1.9 SEQUENCING

A. At least 30 days before commencement of the acceptance tests, submit the manufacturer's complete field testing procedures to the Engineer and to the testing laboratory, complete with expected test results and tolerances for all equipment to be tested.

B. Perform testing in the following sequence:
1. Perform routine tests as the equipment is installed including:
a. Insulation-resistance tests.
b. Continuity tests.
c. Rotational tests.
2. Adjusting and preliminary calibration.
3. Acceptance tests.
4. Demonstration.
5. Commissioning and plant start-up.

1.10 SCHEDULING (NOT USED)

1.11 WARRANTY

A. As specified in the Common Work Results for Electrical section.

1.12 SYSTEM START-UP (NOT USED)

1.13 OWNER'S INSTRUCTIONS (NOT USED)

1.14 MAINTENANCE (NOT USED)

PART 2 PRODUCTS (NOT USED)

PART 3 EXECUTION

3.1 EXAMINATION (NOT USED)

3.2 PREPARATION

A. Test instrument calibration:
   1. Utilize a testing laboratory with a calibration program which maintains all applicable test instrumentation within rated accuracy.
      a. The calibrating standard shall be of better accuracy than that of the equipment tested.
   2. The accuracy shall be traceable to the NIST in an unbroken chain.
   3. Calibrate instruments in accordance with the following frequency schedule:
      a. Field instruments: 6 months maximum.
      b. Laboratory instruments: 12 months maximum.
      c. Leased specialty equipment where the accuracy is guaranteed by the lessor (such as Doble): 12 months maximum.
   4. Dated calibration labels shall be visible on all test equipment.
   5. Maintain an up-to-date instrument calibration record for each test instrument:
      a. The records shall show the date and results of each calibration or test.
   6. Maintain an up-to-date instrument calibration instruction and procedure for each test instrument.

B. Do not begin testing until the following conditions have been met:
   1. All instruments required are available and in proper operating condition.
   2. All required dispensable materials such as solvents, rags, and brushes are available.
   3. All equipment handling devices such as cranes, vehicles, chain falls and other lifting equipment are available or scheduled.
   4. All instruction books, calibration curves, or other printed material to cover the electrical devices are available.
   5. Data sheets to record all test results are available.

3.3 INSTALLATION

A. Test decal:
   1. The testing laboratory shall affix a test decal on the exterior of equipment or equipment enclosure of protective devices after performing electrical tests.
   2. The test decal shall be color coded to communicate the condition of maintenance of the protective. The color scheme for condition of maintenance of overcurrent protective devices shall be:
      a. White: electrically and mechanically acceptable.

b. Yellow; minor deficiency not affecting fault detection and operation, but minor electrical or mechanical condition exists.

3. The decal shall include the following information at a minimum:
   a. Testing organization.
   b. Project identifier.
   c. Test date.
   d. Technician identifier.

3.4 ERECTION, INSTALLATION, APPLICATION, CONSTRUCTION (NOT USED)

3.5 REPAIR/RESTORATION (NOT USED)

3.6 RE-INSTALLATION (NOT USED)

3.7 COMMISSIONING

A. Testing and Training Phase: Installation Testing:
   1. Also called "Field Acceptance Testing".
   2. Panelboards:
      a. Cleaning:
         1) Visually inspect panelboard for evidence of discoloration, abnormal dust accumulation, metal shards, or any other indication of overheating, wear, or other abnormal conditions prior to cleaning.
         2) Clean cabinet with a brush, vacuum cleaner, or clean, dry, lint-free rags to remove any accumulation of dust, dirt, or other foreign matter. Do not use liquids, solvents or detergents when cleaning panelboards or components.
         3) Avoid blowing dust into panelboards. Do not use a blower or compressed air.
         4) Clean Supports, terminals, and other major insulating surfaces with clean, dry, lint-free rags or soft bristled brushes.
         5) Remove dust, soot, grease, moisture, and foreign material from surface of circuit breakers.
      b. General:
         1) Compare equipment nameplate data with the Contract Documents.
         2) Check panelboard circuit schedule for accuracy.
         3) Verify appropriate anchorage, required area clearances, and correct alignment.
         4) Inspect overall general condition for physical damage. Check for broken studs and loose or damaged wires, connector, terminations, etc. Check all bolts, nuts, washer, and pins for tightness. Tighten or use manufacture’s replacement parts as required.
         5) Inspect cabinets for signs of rust, corrosion, or deteriorating paint. Inspect cabinets for evidence of localized heat damage to the paint. Investigate sources of heat. Repair painted surfaces.
         6) Check that covers are in place and fastened. Plug any open unused knockouts.
         7) Inspect panelboard for moisture. Seal off any cracks or openings which have allowed moisture to enter the cabinet. Inspect all component devices. Replace any components that show evidence of damage from moisture.
         8) Look for any recent changes in sprinklers or other plumbing that might expose indoor panelboards to a source of liquids. Eliminate sources of water, moisture, or liquids, or provide adequate barriers to protect panelboards from sources of water, moisture, or liquids.
         9) Inspect panelboards and internal components for evidence of overheating, arc spatter, sooty deposits, and tracking. Investigate and correct sources of

arcing or overheating. Consult the panelboard manufacturer for recommendations.

10) Verify that fuse and/or circuit breaker sizes and types correspond to record drawings, if available, as well as to the circuit breaker's address for microprocessor communications packages, if equipped.
11) Set adjustable circuit breakers in accordance with engineering coordination study supplied by Owner.

c. Terminations, Connections, and Lugs:
   1) Inspect bolted electrical connections for high resistance using one of the following methods:
      a) Use of low-resistance ohmmeter.
         (1) Compare bolted connection resistance values to values of similar connections:
            (a) Investigate values which deviate from those of similar bolted connections by more than 50 percent of the lowest value.
      b) Verify tightness of accessible bolted electrical connections by the calibrated torque wrench method:
         (1) Refer to manufacturer's instructions for proper foot-pound levels or NETA ATS tables.
   2) Inspect terminations, connection, and lugs for alignment, physical damage, burns, corrosion, discoloration, flaking, heat damage, arcing, pitting, melting, deterioration, carbonization, cracks, chips, breaks, partial discharge, or moisture. Investigate and eliminate sources of any damage.
   3) Follow manufacturer recommendations for cleaning, repairing, and replacing damaged parts.
   4) Replace overheated connections. Tighten connections to proper to proper torque levels as specified above.
d. Conductors and raceways:
   1) Inspect supply conductors and terminations for overheating, discoloration, and oxidation. Investigate and correct any deficiencies.
   2) Ensure the conductors are protected within their ampacities.
   3) Visually check panelboard, cables, and raceways for proper bonding and grounding. Correct improper bonding and grounding.
   4) Inspect conductors for discoloration, arcing, pitting, melting, flaking of insulation and/or metal parts. Repair or replace damaged components in accordance with manufacturer's recommendations.
   5) Inspect for frayed or broken wires. Replace or repair damaged components in accordance with manufacturer recommendations.
   6) Inspect for frayed or broken wires. Replace or repair conductors as necessary.
   7) Inspect conduits for moisture. Seal conduits which are a source of moisture and provide means to drain moisture away from the panelboard.
e. Circuit breakers:
   1) Breakers rated less than 100 A:
      a) Operate circuit breakers several times in order to exercise the mechanisms and the contacts, and to ensure smooth operation. Do not oil or grease parts of molded case circuit breakers.
      b) Visually check circuit breakers for evidence of overheating and thermal damage. Investigate and eliminate sources of overheating.
      c) Check circuit breakers for visual defects, chipping, cracks, breaks, burns, and deterioration. Replace damaged circuit breakers.
      d) Verify correct operation of any auxiliary features such as trip and pickup indicators, zone interlocking, electrical close and trip operation, trip-free, and antipump function.
      e) Inspect interchangeable trip-unit circuit breakers for tightness of trip units.

f) Check circuit breaker terminals and connections for tightness as specified above.

2) Breakers rated 100 A and higher:
   a) Perform visual and mechanical inspection as specified in this Section.
   b) Perform electrical tests as specified in this Section.

3. Dry type transformers:
   a. Visual and mechanical inspection:
      1) Compare equipment nameplate data with the Contract Documents.
      2) Inspect physical and mechanical condition.
      3) Inspect anchorage, alignment, and grounding.
      4) Verify that resilient mounts are free and that any shipping brackets have been removed.
      5) Inspect equipment for cleanliness.
      6) Inspect bolted electrical connections for high resistance using one of the following methods:
         a) Use of low-resistance ohmmeter.
         b) Verify tightness of accessible bolted electrical connections by the calibrated torque wrench method:
            (1) Refer to manufacturer's instructions for proper foot-pound levels or NETA ATS tables.
      7) Verify that as-left tap connections are as specified.
   b. Electrical tests:
      1) Perform resistance measurements through bolted connections with a low-resistance ohmmeter.
      2) Perform insulation-resistance tests winding-to-winding and each winding-to-ground:
         a) Apply voltage in accordance with manufacturer's published data.
            (1) Refer to NETA ATS tables in the absence of manufacturer's published data.
      3) Calculate dielectric absorption ration or polarization index.
      4) Verify correct secondary voltage, phase-to-phase and phase-to-neutral after energization and before loading.
   c. Test values:
      1) Compare bolted connection resistance values to values of similar connections:
         a) Investigate values which deviate from those of similar bolted connections by more than 50 percent of the lowest value.
      2) Bolt-torque levels shall be in accordance with manufacturer's published data:
         a) Refer to NETA ATS tables in the absence of manufacturer's published data.
      3) Tap connections are left as found unless otherwise specified.
      4) Minimum insulation-resistance values of transformer insulation shall be in accordance with manufacturer's published data:
         a) Refer to NETA ATS tables in the absence of manufacturer's published data.
         b) Investigate insulation values less than the allowable minimum.
      5) The dielectric absorption ratio or polarization index shall not be less than 1.0.
      6) Turns-ratio results should not deviate more than 1/2 percent from either the adjacent coils or calculated ratio.
      7) Phase-to-phase and phase-to-neutral secondary voltages shall be in agreement with nameplate data.

4. Low voltage cables, 600 volt maximum:
   a. Visual and mechanical inspection:
      1) Compare cable data with the Drawings and Specifications.

2) Inspect exposed sections of cable for physical damage and correct connection as indicated on the Drawings.
3) Inspect bolted electrical connections for high resistance by one of the following methods:
a) Use of low-resistance ohmmeter.
b) Verify tightness of accessible bolted electrical connections by the calibrated torque wrench method:
(1) Refer to manufacturer's instructions for proper foot-pound levels or NETA ATS tables.
4) Inspect compression applied connectors for correct cable match and indentation.
5) Inspect for correct identification and arrangement.
6) Inspect cable jacket insulation and condition.

b. Electrical tests:
1) Perform resistance measurements through bolted connections with a low-resistance ohmmeter.
2) Perform insulation resistance test on each conductor with respect to ground and adjacent conductors:
a) Applied potential shall be 500 volts dc for 300 volt rated cable and 1,000 volts dc for 600 volt rated cable.
b) Test duration shall be 1 minute.
3) Perform continuity tests to insure correct cable connection.
4) Verify uniform resistance of parallel conductors.

c. Test values:
1) Compare bolted connection resistance values to values of similar connections:
a) Investigate values which deviate from those of similar bolted connections by more than 50 percent of the lowest value.
2) Insulation-resistance values shall be in accordance with manufacturer's published data:
a) Refer to NETA ATS tables in the absence of manufacturer's published data.
b) Investigate values of insulation-resistance less than the allowable minimum.
3) Cable shall exhibit continuity.
4) Deviations in resistance between parallel conductors shall be investigated.

5. Low voltage molded case and insulated case circuit breakers:
a. Visual and mechanical inspection:
1) Compare equipment nameplate data with the Contract Documents.
2) Inspect physical and mechanical condition.
3) Inspect anchorage and alignment.
4) Verify the unit is clean.
5) Operate the circuit breaker to ensure smooth operation.
6) Inspect bolted electrical connections for high resistance by one of the following methods:
a) Use of low-resistance ohmmeter.
b) Verify tightness of accessible bolted electrical connections by the calibrated torque wrench method:
(1) Refer to manufacturer's instructions for proper foot-pound levels or NETA ATS tables.
7) Perform adjustments for final protective device settings in accordance with the coordination study.

b. Electrical tests:
1) Perform resistance measurements through bolted connections with a low-resistance ohmmeter.

2) Perform insulation-resistance tests for 1 minute on each pole, phase-to-phase and phase-to-ground with the circuit breaker closed and across each open pole:
   a) Apply voltage in accordance with manufacturer's published data.
   b) Refer to NETA ATS tables in the absence of manufacturer's published data.
3) Perform a contact/pole-resistance test.
4) Determine long-time pickup and delay by primary current injection.
5) Determine short-time pickup and delay by primary current injection.
6) Determine ground-fault pickup and delay by primary current injection.
7) Determine instantaneous pickup value by primary current injection.
8) Perform minimum pickup voltage tests on shunt trip and close coils in accordance with manufacturer's published data.
9) Verify correct operation of any auxiliary features such as trip and pickup indicators, zone interlocking, electrical close and trip operation, trip-free, anti-pump function and trip unit battery condition:
   a) Reset all trip logs and indicators.
10) Verify operation of charging mechanism.

c. Test values:
1) Compare bolted connection resistance values to values of similar connections:
   a) Investigate values which deviate from those of similar bolted connections by more than 50 percent of the lowest value.
2) Bolt-torque levels shall be in accordance with manufacturer's published data:
   a) Refer to NETA ATS tables in the absence of manufacturer's published data.
3) Insulation-resistance values shall be in accordance with manufacturer's published data:
   a) Refer to NETA ATS tables in the absence of manufacturer's published data.
   b) Investigate values of insulation-resistance less than the allowable minimum.
4) Microhm or dc millivolt drop values shall not exceed the high levels of the normal range as indicated in the manufacturer's published data:
   a) If manufacturer's data is not available, investigate any values which deviate from adjacent poles or similar breakers by more than 50 percent of the lowest value.
5) Long-time pickup values shall be as specified, and the trip characteristic shall not exceed manufacturer's published time-current characteristic tolerance band including adjustment factors:
   a) If manufacturer's curves are not available, trip times shall not exceed the value shown in NETA ATS tables.
6) Short-time pickup values shall be as specified, and the trip characteristic shall not exceed manufacturer's published time-current tolerance band.
7) Ground fault pickup values shall be as specified, and the trip characteristic shall not exceed manufacturer's published time-current tolerance band.
8) Instantaneous pickup values shall be as specified and within manufacturer's published tolerances:
   a) Refer to NETA ATS tables in the absence of manufacturer's published data.
9) Pickup values and trip characteristics shall be within manufacturer's published tolerances.
10) Breaker open, close, trip, trip-free, anti-pump, and auxiliary features shall function as designed.

11) The charging mechanism shall operate in accordance with manufacturer's published data.

6. Instrument transformers - current transformers:
   a. Visual and mechanical inspection:
      1) Compare equipment nameplate data with the Contract Documents.
      2) Inspect physical and mechanical condition.
      3) Verify correct connection of transformers with system requirements.
      4) Verify that adequate clearances exist between primary and secondary circuit wiring.
      5) Verify the unit is clean.
      6) Inspect bolted electrical connections for high resistance using one of the following methods:
         a) Use of low-resistance ohmmeter.
         b) Verify tightness of accessible bolted electrical connections by calibrated torque wrench method:
            (1) Refer to manufacturer's instructions for proper foot-pound levels or NETA ATS tables.
      7) Verify that all required grounding and shorting connections provide contact.
      8) Verify appropriate lubrication on moving current-carrying parts and on moving and sliding surfaces.
   b. Electrical tests:
      1) Perform resistance measurements through bolted connections with a low-resistance ohmmeter.
      2) Perform insulation-resistance test of each current transformer and its secondary wiring with respect to ground at 1,000 VDC for 1 minute:
         a) For solid state devices that cannot tolerate the applied voltage, follow the manufacturer's recommendation.
      3) Perform a polarity test of each current transformer in accordance with IEEE C57.13.1.
      4) Perform a ratio verification test using the voltage or current method in accordance with IEEE C57.13.1.
      5) Perform an excitation test on current transformers used for relaying applications in with accordance with IEEE C57.13.1.
      6) Measure current circuit burdens at transformer terminals in accordance with IEEE C57.13.1.
      7) When applicable perform insulation-resistance tests on the primary winding with the secondary grounded:
         a) Test voltages shall be in accordance with NETA ATS tables.
      8) Perform power-factor or dissipation-factor tests in accordance with test equipment manufacturer's published data.
      9) Verify that current transformer secondary circuits are grounded and have only 1 grounding point in accordance with IEEE C57.13.3:
         a) That grounding point should be located as specified by the Engineer in the Contract Documents.
   c. Test values:
      1) Compare bolted connection resistance values to values of similar connections:
         a) Investigate values which deviate from those of similar bolted connections by more than 50 percent of the lowest value.
      2) Bolt-torque levels shall be in accordance with manufacturer's published data:
         a) Refer to NETA ATS tables in the absence of manufacturer's published data.
      3) Insulation-resistance values of instrument transformers shall be in accordance with manufacturer's published data:

a) Refer to NETA ATS tables in the absence of manufacturer's published data.

4) Polarity results shall agree with transformer markings.
5) Ratio errors shall be in accordance with IEEE C57.13.
6) Excitation results for current transformers shall match the curve supplied by the manufacturer or be in accordance with IEEE C57.13.1.
7) Measured burdens shall be compared to instrument transformer ratings.
8) If no evidence of distress or insulation failure is observed by the end of the total time of voltage application during the dielectric withstand test, the primary winding is considered to have passed the test.
9) Power-factor or dissipation-factor values shall be compared to manufacturer's published data:
   a) In the absence manufacturer's published data, use the test equipment manufacturer's published data.
10) Test results shall indicate that the circuits have only 1 grounding point.

7. Instrument transformers - voltage transformers:
   a. Visual and mechanical inspection:
      1) Compare equipment nameplate data with the Contract Documents.
      2) Inspect physical and mechanical condition.
      3) Verify correct connection of transformers with system requirements.
      4) Verify that adequate clearances exist between primary and secondary circuit wiring.
      5) Verify the unit is clean.
      6) Inspect bolted electrical connections for high resistance using one of the following methods:
         a) Use of low-resistance ohmmeter.
         b) Verify tightness of accessible bolted electrical connections by calibrated torque wrench method:
            (1) Refer to manufacturer's instructions for proper foot-pound levels or NETA ATS tables.
      7) Verify that all required grounding and connections provide contact.
      8) Verify correct primary and secondary fuse sizes for voltage transformers.
      9) Verify appropriate lubrication on moving current-carrying parts and on moving and sliding surfaces.
      10) Perform as-left tests.
   b. Electrical tests - voltage transformers:
      1) Perform resistance measurements through bolted connections with a low-resistance ohmmeter.
      2) Perform insulation-resistance tests winding-to-winding and winding-to-ground:
         a) Test voltage shall be applied for 1 minute in accordance with NETA ATS requirements.
         b) For solid state devices that cannot tolerate the applied voltage, follow the manufacturer's recommendation.
      3) Perform a polarity test on each voltage transformer to verify the polarity marks on H_1- X_1 relationship as applicable.
      4) Perform a turns ratio test on all tap positions.
      5) Measure voltage circuit burdens at transformer terminals.
      6) Perform a dielectric withstand test on the primary windings with the secondary windings grounded:
         a) The dielectric voltage shall be in accordance with NETA ATS tables.
         b) Apply the test voltage for 1 minute.
      7) Perform power-factor or dissipation-factor tests in accordance with test equipment manufacturers published data.
      8) Verify that voltage transformer secondary circuits are grounded and have only 1 grounding point in accordance with IEEE C57.13.3:

a) That grounding point should be located as specified by the Engineer in the Contract Documents.

c. Test values:
1) Compare bolted connection resistance values to values of similar connections:
a) Investigate values which deviate from those of similar bolted connections by more than 50 percent of the lowest value.
2) Bolt-torque levels shall be in accordance with manufacturer's published data:
a) Refer to NETA ATS tables in the absence of manufacturer's published data.
3) Insulation-resistance values of instrument transformers shall be in accordance with manufacturer's published data:
a) Refer to NETA ATS tables in the absence of manufacturer's published data.
4) Polarity results shall agree with transformer markings.
5) Ratio errors shall be in accordance with IEEE C57.13.
6) Measured burdens shall be compared to instrument transformer ratings.
7) If no evidence of distress or insulation failure is observed by the end of the total time of voltage application during the dielectric withstand test, the primary winding is considered to have passed the test.
8) Power-factor or dissipation-factor values shall be compared to manufacturer's published data:
a) In the absence manufacturer's published data, use the test equipment manufacturer's published data.
9) Test results shall indicate that the circuits have only 1 grounding point.

8. Metering devices, microprocessor based:
a. Visual and mechanical inspection:
1) Compare equipment nameplate data with the Contract Documents.
2) Inspect meters and cases for physical damage.
3) Clean front panel.
4) Verify tightness of electrical connections.
5) Record the following:
a) Model number.
b) Serial number.
c) Firmware revision.
d) Software revision.
e) Rated control voltage.
6) Verify operation of display and indicating devices.
7) Record passwords.
8) Verify the unit is grounded in accordance with the manufacturer's instructions.
9) Set all required parameters including instrument transformer ratios, system type, frequency, power demand methods/intervals, and communications requirements.
b. Electrical tests:
1) Apply voltage or current as appropriate to each analog input and verify correct measurement and indication.
2) Confirm correct operation and setting of each auxiliary input/output feature including mechanical relay, digital and analog.
3) After initial system energization, confirm measurements and indications are consistent with loads present.
c. Test values:
1) Nameplate data shall match the Contract Documents.
2) Tightness of electrical connections shall ensure a low resistance connection.

3) Display and indicating devices shall operate per manufacturer's published data.
4) Measurement and indication of applied voltages and currents shall be within the manufacturer's published tolerances for accuracy.
5) All auxiliary input/output features shall operate per settings and manufacturer's published data.
6) Measure and indications shall be consistent with energized system loads.

9. Grounding systems:
   a. Visual and mechanical inspection:
      1) Inspect ground system for compliance with the Contract Documents, and the NEC.
      2) Inspect physical and mechanical condition.
      3) Inspect bolted electrical connections for high resistance using one of the following methods:
         a) Use of low-resistance ohmmeter.
         b) Verify tightness of accessible bolted electrical connections by calibrated torque wrench method:
            (1) Refer to manufacturer’s instructions for proper foot-pound levels or NETA ATS tables.
      4) Inspect anchorage.
   b. Electrical tests:
      1) Perform resistance measurements through bolted connections with a low-resistance ohmmeter.
      2) Perform fall of potential test or alternative test in accordance with IEEE 81 on the main grounding electrode or system.
      3) Perform point-to-point tests to determine the resistance between the main grounding system and all major electrical equipment frames, the system neutral and any derived neutral points.
   c. Test values:
      1) Grounding system electrical and mechanical connections shall be free of corrosion.
      2) Compare bolted connection resistance values to values of similar connections:
         a) Investigate values which deviate from those of similar bolted connections by more than 50 percent of the lowest value.
      3) Bolt-torque levels shall be in accordance with manufacturer’s published data:
         a) Refer to NETA ATS tables in the absence of manufacturer’s published data.
      4) The resistance between the main grounding electrode and ground shall be as specified in the Grounding and Bonding section.
      5) Investigate point-to-point resistance values that exceed 0.5 ohm.

10. Rotating machinery, ac induction motors and generators:
    a. Visual and mechanical inspection:
       1) Compare equipment nameplate information with the Contract Documents.
       2) Inspect physical and mechanical condition.
       3) Inspect anchorage, alignment, and grounding.
       4) Inspect air baffles, filter media, cooling fans, slip rings, brushes, and brush rigging
       5) Inspect bolted electrical connections for high resistance using one or more of the following methods:
          a) Use of low-resistance ohmmeter.
          b) Verify tightness of accessible bolted electrical connections by calibrated torque wrench method:
             (1) Refer to manufacturer’s instructions for proper foot-pound levels or NETA ATS tables.

6) Verify correct application of appropriate lubrication and lubrication systems.
7) Verify that resistance temperature detector (RTD) circuits conform to that indicated on the Drawings.

b. Electrical tests - AC Induction:
1) Perform resistance measurements through bolted connections with a low-resistance ohmmeter.
2) Perform insulation-resistance test in accordance with IEEE 43:
a) On motors 200 horsepower and smaller, test duration shall be 1 minute. Calculate dielectric absorption ratio for 60/30 second periods.
b) On motors larger than 200 horsepower, test duration shall be 10 minutes. Calculate polarization index.
3) On machines rated at 2,300 volts and greater, perform dielectric withstand voltage tests in accordance with:
a) IEEE 95 for dc dielectric withstand voltage tests.
b) NEMA MG1 for ac dielectric withstand voltage tests.
4) Perform phase-to-phase stator resistance test on machines rated at 2,300 volts and greater.
5) Perform insulation-resistance test on insulated bearings in accordance with manufacturer's published data.
6) Test surge protection devices as specified in this Section.
7) Test motor starter as specified in this Section.
8) Perform resistance tests on resistance temperature detector (RTD) circuits.
9) Verify operation of motor space heater, if applicable.

c. Test values:
1) Inspection:
a) Air baffles shall be clean and installed in accordance with the manufacturer's published data.
b) Filter media shall be clean and installed in accordance with the manufacturer's published data.
c) Cooling fans shall operate.
d) Slip ring alignment shall be within manufacturer's published tolerances.
e) Brush alignment shall be within manufacturer's published tolerances.
f) Brush rigging shall be within manufacturer's published tolerances.
2) Compare bolted connection resistance values to values of similar connections:
a) Investigate values which deviate from those of similar bolted connections by more than 50 percent of the lowest value.
3) Bolt-torque levels shall be in accordance with manufacturer's published data:
a) Refer to NETA ATS tables in the absence of manufacturer's published data.
4) Air-gap spacing and machine alignment shall be in accordance with manufacturer's published data.
5) The recommended minimum insulation-resistance ($IR_{1\ min}$) test results in megohms shall be in accordance with NETA ATS tables.
a) The polarization index value shall not be less than 2.0.
b) The dielectric absorption ratio shall not be less than 1.4.
6) If no evidence of distress or insulation failure is observed by the end of the total time of voltage application during the dielectric withstand test, the test specimen is considered to have passed the test.
7) Investigate phase-to-phase stator resistance values that deviate by more than 5 percent.
8) Power factor or dissipation factor values shall be compared to manufacturer's published data:

a) In the absence of manufacturer's published data, compare values of similar machines.

9) Tip-up values shall indicate no significant increase in power factor.

10) If no evidence of distress, insulation failure, or waveform nesting is observed by the end of the total time of voltage application during the surge comparison test, the test specimen is considered to have passed the test.

11) Bearing insulation-resistance measurements shall be within manufacturer's published tolerances:

a) In the absence of manufacturer's published data, compare values of similar machines.

12) Test results of surge protection devices shall be as specified in this Section.

13) Test results of motor starter equipment shall be as specified in this Section.

14) RTD circuits shall conform to the design intent and machine protection device manufacturer's published data.

15) Heaters shall be operational.

16) Vibration amplitudes of the uncoupled and unloaded machine shall be in accordance with manufacturer's published data:

a) In the absence of manufacturer's published data, vibration amplitudes shall not exceed values in NETA ATS tables.

b) If values exceed those in the NETA ATS tables, perform a complete vibration analysis.

11. Motor starters, low voltage:

a. Visual and mechanical inspection:

1) Compare equipment nameplate information with the Contract Documents.

2) Inspect physical and mechanical condition.

3) Inspect anchorage, alignment, and grounding.

4) Verify the unit is clean.

5) Inspect contactors:

a) Verify mechanical operation.

b) Verify contact gap, wipe, alignment, and pressure is in accordance with manufacturer's published data.

6) Motor-running protection:

a) Verify overload element rating/motor protection settings are correct for its application.

b) If motor running protection is provided by fuses, verify correct fuse rating.

7) Inspect bolted electrical connections for high resistance using one of the following methods:

a) Use of low-resistance ohmmeter.

b) Verify tightness of accessible bolted electrical connections by calibrated torque wrench method:

(1) Refer to manufacturer's instructions for proper foot-pound levels or NETA ATS tables.

8) Lubrication requirements:

a) Verify appropriate lubrication on moving current-carrying parts.

b) Verify appropriate lubrication on moving and sliding surfaces.

b. Electrical tests:

1) Perform resistance measurements through bolted connections with a low-resistance ohmmeter.

2) Perform insulation-resistance tests for 1 minute on each pole, phase-to-phase and phase to ground with the starter closed, and across each open pole for 1 minute:

a) Test voltage shall be in accordance with manufacturer's published data.

b) Refer to NETA ATS tables in the absence of manufacturer's published data.

3) Test motor protection devices in accordance with manufacturer's published data.
4) Test circuit breakers as specified in this Section.
5) Perform operational tests by initiating control devices.

c. Test values:
1) Compare bolted connection resistance values to values of similar connections:
a) Investigate values which deviate from those of similar bolted connections by more than 50 percent of the lowest value.
2) Bolt-torque levels shall be in accordance with manufacturer's published data:
a) Refer to NETA ATS tables in the absence of manufacturer's published data.
3) Insulation-resistance values shall be in accordance with manufacturer's published data:
a) Refer to NETA ATS tables in the absence of manufacturer's published data.
b) Investigate values of insulation-resistance less than the allowable minimum.
4) Motor protection parameters shall be in accordance with manufacturer's published data.
5) Circuit breaker test results shall as specified in this Section.
6) Control devices shall perform in accordance with system design requirements.

12. Motor control centers, low voltage:
a. Visual and mechanical inspection:
1) Compare equipment nameplate data with the Contract Documents.
2) Inspect physical and mechanical condition.
3) Inspect anchorage, alignment, grounding and required clearances.
4) Verify the unit is clean and all shipping bracing, loose parts, and documentation shipped inside cubicles have been removed.
5) Verify that circuit breaker/fuse sizes and types correspond to the approved submittals and the coordination study.
6) Verify that current and voltage transformer ratios correspond to those indicated on the Drawings.
7) Verify that wiring connections are tight and that wiring is secure to prevent damage during routine operation of moving parts.
8) Inspect bolted electrical connections for high resistance using one of the following methods:
a) Use of low-resistance ohmmeter.
b) Verify tightness of accessible bolted electrical connections by the calibrated torque wrench method:
(1) Refer to manufacturer's instructions for proper foot-pound levels or NETA ATS tables.
9) Verify operation and sequencing of interlocking systems:
a) Attempt closure on locked-open devices.
b) Attempt to open locked-closed devices.
c) Make/attempt key-exchanges in all positions.
10) Lubrication requirements:
a) Verify appropriate lubrication on moving current-carrying parts.
b) Verify appropriate lubrication on moving and sliding surfaces.
11) Inspect insulators for evidence of physical damage or contaminated surfaces.
12) Verify correct barrier and shutter installation and operation.
13) Exercise all active components.
14) Inspect all indicating devices for correct operation.

15) Verify that filters are in place and/or vents are clear.
16) Perform visual and mechanical inspection of instrument transformers as specified in this Section.
17) Perform visual and mechanical inspection of surge arresters as specified in this Section.
18) Inspect control power transformers:
    a) Inspect for physical damage, cracked insulation, broken leads, and tightness of connections, defective wiring, and overall general condition.
    b) Verify that primary and secondary fuse/circuit breaker ratings match the submittal drawings.
    c) Verify correction functioning of grounding contacts.
19) Perform visual and mechanical inspection of all motor control center components as specified in this Section.

b. Electrical tests:
1) Perform resistance measurements through bolted connections with a low-resistance ohmmeter.
2) Perform insulation-resistance tests on each bus section, phase-to-phase and phase-to-ground for 1 minute:
    a) Perform test in accordance with NETA ATS tables.
3) Perform an dielectric withstand test on each bus section, each phase to ground with phases not under test grounded, in accordance with manufacturer's published data or NETA ATS tables. Apply the test voltage for 1 minute.
4) Perform ground-resistance tests:
    a) Perform point-to-point tests to determine the resistance between the main grounding system and all major electrical equipment frames, system neutral and derived neutral points.
5) Control power transformers:
    a) Perform insulation-resistance tests, winding-to-winding and winding-to-ground:
        (1) Test voltages shall be in accordance with NETA ATS tables or as specified by the manufacturer.
    b) Perform secondary wiring integrity test:
        (1) Disconnect transformer at secondary terminals and connect secondary wiring to a rated secondary voltage source:
            (a) Verify correct potential at all devices.
    c) Verify correct secondary voltage by energizing primary winding with system voltage:
        (1) Measure secondary voltage with the secondary wiring disconnected.
6) Verify operation of space heaters.
7) Perform electrical tests of all motor control center components as specified in this Section.

c. Test values:
1) Compare bolted connection resistance values to values of similar connections:
    a) Investigate values which deviate from those of similar bolted connections by more than 50 percent of the lowest value.
2) Bolt-torque levels shall be in accordance with manufacturer's published data:
    a) Refer to NETA ATS tables in the absence of manufacturer's published data.
3) Insulation-resistance values for bus and control power transformers shall be in accordance with manufacturer's published data:

a) Refer to NETA ATS tables in the absence of manufacturer's published data.
b) Investigate insulation values less than the allowable minimum.
c) Do not proceed with dielectric withstand voltage tests until insulation-resistance values are above minimum values.

4) Bus insulation shall withstand the over potential test voltage applied.
5) Instrument transformer test values shall be as specified in this Section.
6) Investigate grounding system point-to-point resistance values that exceed 0.5 ohm.
7) Meter accuracy shall be in accordance with manufacturer's published data.
8) Control power transformers:
   a) Insulation-resistance values of control power transformers shall be in accordance with manufacturer's published data:
      (1) Refer to NETA ATS tables in the absence of manufacturer's published data.
      (2) Investigate insulation values less than the allowable minimum.
      (3) Do not proceed with dielectric withstand voltage tests until insulation-resistance values are above minimum values.
   b) Secondary wiring shall be as indicated on the Drawings and specified in the Specifications.
   c) Secondary voltage shall be as indicated on the Drawings.
9) Heaters shall be operational.
10) Test values for motor control center components shall be as specified in this Section.

13. Variable frequency drive systems:
   a. Visual and mechanical inspection:
      1) Compare equipment nameplate data with the Contract Documents.
      2) Inspect physical and mechanical condition.
      3) Inspect anchorage, alignment, and grounding.
      4) Verify the unit is clean.
      5) Ensure vent path openings are free from debris and that heat transfer surfaces are clean.
      6) Verify correct connections of circuit boards, wiring, disconnects, and ribbon cables.
      7) Motor running protection:
         a) Verify drive overcurrent setpoints are correct for their application.
         b) If drive is used to operate multiple motors, verify individual overload element ratings are correct for their application.
         c) Apply minimum and maximum speed setpoints. Verify setpoints are within limitations of the load coupled to the motor.
      8) Inspect bolted electrical connections for high resistance using one of the following methods:
         a) Use of low-resistance ohmmeter.
         b) Verify tightness of accessible bolted electrical connections by the calibrated torque wrench method:
            (1) Refer to manufacturer's instructions for proper foot-pound levels or NETA ATS tables.
      9) Verify correct fuse sizing in accordance with manufacturer's published data.
      10) Perform visual and mechanical inspection of input circuit breaker as specified in this Section.
   b. Electrical tests:
      1) Perform resistance measurements through bolted connections with low resistance ohmmeter.
      2) Test the motor overload relay elements by injecting primary current through the overload circuit and monitoring trip time of the overload element.

3) Test for the following parameters in accordance with relay calibration procedures specified in NETA ATS or as recommended by the manufacturer:
    a) Input phase loss protection.
    b) Input overvoltage protection.
    c) Output phase rotation.
    d) Overtemperature protection.
    e) Direct current overvoltage protection.
    f) Overfrequency protection.
    g) Drive overload protection.
    h) Fault alarm outputs.
4) Perform continuity tests on bonding conductors as specified in accordance with NETA ATS.
5) Perform start-up of drive in accordance with manufacturer's published data. Calibrate drive to the system's minimum and maximum speed control signals.
6) Perform operational tests by initiating control devices:
    a) Slowly vary drive speed between minimum and maximum. Observe motor and load for unusual noise or vibration.
    b) Verify operation of drive from remote start/stop and speed control signals.
7) Perform electrical tests of input circuit breaker as specified in this Section.
8) Measure fuse resistance.

c. Test values:
1) Compare bolted connection resistance values to values of similar connections:
    a) Investigate values which deviate from those of similar bolted connections by more than 50 percent of the lowest value.
2) Bolt-torque levels shall be in accordance with manufacturer's published data:
    a) Refer to NETA ATS tables in the absence of manufacturer's published data.
3) Overload test trip times at 300 percent of overload element rating shall be in accordance with manufacturer's published time-current curve.
4) Test values for input circuit breaker shall be as specified in this Section.
5) Relay calibration results shall be as specified in this Section.
6) Continuity of bonding conductors shall be in accordance with NETA ATS.
7) Control devices shall perform in accordance with system requirements.
8) Operational tests shall conform to system design requirements.
9) Investigate fuse resistance values that deviate from each other by more than 15 percent.

14. Surge arresters, low-voltage:
a. Visual and mechanical inspection:
1) Compare equipment nameplate data with the Contract Documents.
2) Inspect physical and mechanical condition.
3) Inspect anchorage, alignment, grounding, and clearances.
4) Verify the arresters are clean.
5) Inspect bolted electrical connections for high resistance using one of the following methods:
    a) Use of low-resistance ohmmeter.
    b) Verify tightness of accessible bolted electrical connections by the calibrated torque wrench method:
        (1) Refer to manufacturer's instructions for proper foot-pound levels or NETA ATS tables.
6) Verify that the ground lead on each device is individually attached to a ground bus or ground electrode.

7) Verify that stroke counter is correctly mounted and electrically connected, if applicable.
8) Record stroke counter reading.

b. Electrical tests:
1) Perform resistance measurements through bolted connections with a low-resistance ohmmeter.
2) Perform an insulation-resistance test on each arrester, phase terminal- to- ground:
a) Apply voltage in accordance with manufacturers published data.
b) Refer to NETA ATS tables in the absence of manufacturer's published data.
3) Test grounding connection as specified in this Section.

c. Test values:
1) Compare bolted connection resistance values to values of similar connections:
a) Investigate values which deviate from those of similar bolted connections by more than 50 percent of the lowest value.
2) Bolt-torque levels shall be in accordance with manufacturer's published data:
a) Refer to NETA ATS tables in the absence of manufacturer's published data.
3) Insulation-resistance values shall be in accordance with manufacturer's published data:
a) Refer to NETA ATS tables in the absence of manufacturer's published data.
b) Investigate insulation values less than the allowable minimum.
4) Resistance between the arrester ground terminal and the ground system shall be less than 0.5 ohm.

15. Fiber-optic cables:
a. Visual and mechanical inspection:
1) Compare cable, connector, and splice data with the Contract Documents.
2) Inspect cable and connections for physical and mechanical damage.
3) Verify that all connectors and splices are correctly installed.

b. Optical tests:
1) Perform cable length measurement, fiber fracture inspection, and construction defect inspection using an optical time domain reflectometer (OTDR):
a) OTDR test performed on fiber cables less than 100 meters shall be performed with the aid of a launch cable.
b) Adjust OTDR pulse width settings to a maximum setting of 1/1,000th of the cable length or 10 nanoseconds.
2) Perform connector and splice integrity test using an optical time domain reflectometer.
3) Perform cable attenuation loss measurement with an optical power loss test set:
a) Perform attenuation tests with an Optical Loss Test Set capable and calibrated to show anomalies of 0.1 dB as a minimum.
b) Test multimode fibers at 850 nanometer and 1,300 nanometer.
c) Test single mode fibers at 1,310 nanometer and 1,550 nanometer.
4) Perform connector and splice attenuation loss measurement from both ends of the optical cable with an optical power loss test set:
a) At the conclusion of all outdoor splices at 1 location, and before they are enclosed and sealed, all splices shall be tested with OTDR at the optimal wavelengths (850 and 1,300 for multimode, 1,310 and 1,550 for single mode), in both directions. The splices shall be tested for integrity as well as attenuation.

5) Perform fiber links integrity and attenuation tests using each link shall be an OTDR and an Optical Loss Test Set:
   a) OTDR traces shall be from both directions on each fiber at the 2 optimal wavelengths, 850 nanometer, and 1,300 nanometer for multimode fibers.
   b) Optical loss testing shall be done with handheld test sets in 1 direction at the 2 optimal wavelengths for the appropriate fiber type. Test equipment shall equal or exceed the accuracy and resolution of Agilent/HP 8147 high performance OTDR.

c. Test values:
   1) Cable and connections shall not have been subjected to physical or mechanical damage.
   2) Connectors and splices shall be installed in accordance with industry standards.
   3) The optical time domain reflectometer signal should be analyzed for excessive connection, splice, or cable backscatter by viewing the reflected power/distance graph.
   4) Attenuation loss measurement shall be expressed in dB/km. Losses shall be within the manufacturer's recommendations when no local site specifications are available.
   5) Individual fusion splice losses shall not exceed 0.1 dB. Measurement results shall be recorded, validated by trace, and filed with the records of the respective cable runs.

3.8 FIELD QUALITY CONTROL (NOT USED)

3.9 ADJUSTING (NOT USED)

3.10 CLEANING

A. As specified in the Common Work Results for Electrical section.

B. After the acceptance tests have been completed, dispose of all testing expendables, vacuum all cabinets, and sweep clean all surrounding areas.

3.11 PROTECTION

A. As specified in the Common Work Results for Electrical section.

3.12 SCHEDULES (NOT USED)

END OF SECTION

SECTION 270500

COMMON WORK RESULTS FOR PROCESS CONTROL AND INSTRUMENTATION SYSTEMS

PART 1 GENERAL

1.1 SUMMARY

A. Section includes:
   1. General requirements applicable to all Process Control and Instrumentation Work.
   2. General requirements for process control and instrumentation submittals.

B. Interfaces to equipment, instruments, and other components:
   1. Drawings, Specifications, and overall design are based on preliminary information furnished by various equipment manufacturers, which identify a minimum scope of supply from the manufacturers. This information pertains to, but is not limited to, instruments, control devices, electrical equipment, packaged mechanical systems, and control equipment provided with mechanical systems.
   2. Provide all material and labor needed to install the actual equipment furnished, include all costs to add any additional instruments, wiring, control system inputs/outputs, controls, interlocks, electrical hardware etc., which may be necessary to make a complete, functional installation based on the actual equipment furnished:
      a. Make all changes necessary to meet the manufacturer's wiring requirements.
   3. Review the complete set of Drawings and Specifications in order to ensure that all items related to the instrumentation, control systems, and related services are provided. Include any items indicated on the Drawings or in Specifications from other disciplines in the scope of Work.
   4. Review the complete set of Drawings and Specifications in order to ensure that all items related to the instrumentation and control systems are completely accounted for. Include any items indicated on the Drawings or in Specifications from another discipline in the scope of Work:
      a. If a conflict between Drawings and Specifications is discovered, refer conflict to the Engineer as soon as possible for resolution.
   5. Loop drawings:
      a. Provide complete loop drawings for all systems, including packaged equipment furnished as part of a vendor furnished package, and for all pre-purchased equipment.
      b. The Owner and Engineer are not responsible for providing detailed loop diagrams for Contractor furnished equipment.

C. All instrumentation, and control equipment and systems for the entire project to comply with the requirements specified in the Instrumentation and Control Specifications, whether referenced in the individual Equipment Specifications or not:
   1. The requirements of the Instrumentation and Control Specifications apply to all Instrumentation and Control Work specified in other Specifications, including HVAC controls, packaged mechanical systems, LCPs, VCPs, etc.
   2. Inform all vendors supplying instrumentation, control systems, panels, and/or equipment of the requirements of the Instrumentation and Control Specifications.

D. Contract Documents:
   1. General:
      a. The drawings and specifications are complementary and are to be used together in order to fully describe the Work.
   2. Specifications:

a. These requirements are in addition to all General Requirements.

3. Contract drawings:
   a. The Instrumentation and Control Drawings show in a diagrammatic manner, the desired locations, and arrangements of the components of the Instrumentation Work. Follow the drawings as closely as possible, use professional judgment and coordinate with the other trades to secure the best possible installation, use the entire drawing set for construction purposes.
   b. Locations of equipment, control devices, instruments, boxes, panels, etc. are approximate only, exercise professional judgment in executing the Work to ensure the best possible installation:
      1) The equipment locations and dimensions indicated on the Drawings and elevations are approximate. Use the shop drawings to determine the proper layout, foundation, and pad requirements, etc. for final installation. Coordinate with all subcontractors to ensure that all instrumentation and control equipment is compatible with other equipment and space requirements. Make changes required to accommodate differences in equipment dimensions.
      2) The Contractor has the freedom to select any of the named manufacturers as identified in the individual Specifications; however, the Engineer has designed the spatial equipment layout based upon a single manufacturer and has not confirmed that every named manufacturer's equipment fits in the allotted space. It is the Contractor's responsibility to ensure that the equipment being furnished fits within the defined space.
   c. Installation details:
      1) The Contract Drawings include installation details showing means and methods for installing instrumentation and control equipment. For cases where typical details are not provided or compatible with an installed location, develop installation details that are necessary for completing the Work, and submit these details for review by the Engineer.
   d. Schematic diagrams:
      1) All controls are shown de-energized.
      2) Schematic diagrams show control function only. Incorporate other necessary functions for proper operation and protection of the system.
      3) Add slave relays, where required, to provide all necessary contacts for the control system or where needed to function as interposing relays for control voltage coordination, equipment coordination, or control system voltage drop considerations.
      4) Mount all devices shown on motor controller schematic diagrams in the controller compartment enclosure, unless otherwise noted or indicated.
      5) Control schematics are to be used as a guide in conjunction with the descriptive operating sequences indicated on the Drawings or in the Specifications. Combine all information and furnish a coordinated and fully functional control system.

E. Alternates/Alternatives:
   1. Substitute item provisions as specified.

F. Changes and change orders:
   1. As specified in the Product Requirements section.

1.2 REFERENCES

A. Code compliance:
   1. As specified in the Regulatory Requirements section:

a. The publications are referred to in the text by basic designation only. The latest edition accepted by the Authority Having Jurisdiction of referenced publications in effect at the time of Bid governs.

2. The following codes and standards are hereby incorporated into this Section:
   a. American National Standards Institute (ANSI).
   b. American Petroleum Institute (API):
      1) RP 550 - Manual on Installation of Refinery Instruments and Control Systems; Part II-Process Stream Analyzers; Section 5-Oxygen Analyzers.
      2) RP 551 - Process Measurement Instrumentation.
   c. International Organization for Standardization (ISO):
      1) 9001 - Quality Management Systems - Requirements.
   d. International Society of Automation (ISA):
      1) 5.1 - Instrumentation Symbols and Identification.
      2) 5.4 - Instrument Loop Diagrams.
      3) 20 - Specification Forms for Process Measurement and Control Instruments, Primary Elements, and Control Valves.
   e. National Electrical Manufacturers Association (NEMA):
      1) 250 - Enclosures for Electrical Equipment (1000 V Maximum).
   f. National Fire Protection Association (NFPA).
   g. National Institute of Standards and Technology (NIST).
   h. Underwriters Laboratories, Inc. (UL):
      1) 508 - Standard of Safety for Industrial Control Equipment.
      2) 508A - Standard of Safety for Industrial Control Panels.

B. Compliance with Laws and Regulations:
   1. As specified in the General Conditions section.

1.3 DEFINITIONS

A. Definitions of terms and other electrical and instrumentation considerations in accordance with:
   1. Factory Mutual (FM).
   2. International Electrotechnical Commission (IEC).
   3. Institute of Electrical and Electronics Engineers (IEEE).
   4. International Society of Automation (ISA).
   5. International Organization for Standardization (ISO).
   6. National Electrical Code (NEC).
   7. National Electrical Manufacturers Association (NEMA).
   8. InterNational Electrical Testing Association (NETA).
   9. National Fire Protection Association (NFPA).
   10. National Institute of Standards and Technology (NIST).
   11. Underwriters Laboratories (UL).

B. Specific definitions:
   1. Control circuit: Any circuit operating at 120 volts alternating current (VAC) or direct current (VDC) or less, whose principal purpose is the conveyance of information (including performing logic) and not the conveyance of energy for the operation of an electrically powered device.
   2. Panel: An instrument support system that may be a flat surface, a partial enclosure, or a complete enclosure for instruments and other devices used in process control systems.
   3. Power circuit: Any circuit operating at 90 volts (AC or DC) or more, whose principal purpose is the conveyance of energy for the operation of an electrically powered device.
   4. Signal circuit: Any circuit operating at less than 50 VAC or VDC, which conveys analog information or digital communications information.

5. Digital bus: A communication network, such as PROFIBUS, Foundation Fieldbus, or DeviceNet, allowing instruments and devices to transmit data, control functions, and diagnostic information.
6. 2-Wire transmitter (loop powered): A transmitter that derives its operating power supply from the signal transmission circuit and requires no separate power supply connections. As used in this Section, 2-wire transmitter refers to a transmitter that provides a signal such as 4 to 20 mA 24 VDC regulation of a signal in a series circuit with an external 24 VDC driving potential:
   a. Fieldbus communications signal or both.
7. Powered transmitters: A transmitter that requires a separate power source (120 VAC, 240 VAC, etc.) in order for the transmitter to develop its signal. As used in this Section, the produced signal may be a 4 to 20 mA 24 VDC signal, a digital bus communications signal, or both.

C. NEMA:
1. Type 1 enclosure in accordance with NEMA 250.
2. Type 2 enclosure in accordance with NEMA 250.
3. Type 3 enclosure in accordance with NEMA 250.
4. Type 3R enclosure in accordance with NEMA 250.
5. Type 3S enclosure in accordance with NEMA 250.
6. Type 3X enclosure in accordance with NEMA 250.
7. Type 3RX enclosure in accordance with NEMA 250.
8. Type 3SX enclosure in accordance with NEMA 250.
9. Type 4 enclosure in accordance with NEMA 250.
10. Type 4X enclosure in accordance with NEMA 250.
11. Type 5 enclosure in accordance with NEMA 250.
12. Type 6 enclosure in accordance with NEMA 250.
13. Type 6P enclosure in accordance with NEMA 250.
14. Type 12 enclosure in accordance with NEMA 250.
15. Type 12K enclosure in accordance with NEMA 250.
16. Type 13 enclosure in accordance with NEMA 250.

D. Acronym definitions:
1. ACB: Automatic current balance.
2. ATS: Automatic Transfer Switch.
3. CCS: The PCS central computer system (CCS) consisting of computers and software. The personal computer-based hardware and software system that includes the operator interface, data storage, data retrieval, archiving, alarming, historian, reports, trending, and other higher level control system software and functions.
4. DPDT: Double-pole, double-throw.
5. ES: Enterprise system: Computer based communications or data sharing system utilized for non-process control functions such as E-mail, sharing files, creating documents, etc.
6. FAT: Factory acceptance test also known as Source Test.
7. HART: Highway addressable remote transducer.
8. HOA: Hand-Off-Auto control function that is totally PLC based. In the Hand mode, equipment is started or stopped, valves are opened or closed through operator direction under the control of the PLC software. In the Auto mode, equipment is started or stopped and valves are opened or closed through a control algorithm within the PLC software. In the Off mode, the equipment is prohibited from responding from the PLC control.
9. HMI: Human machine interface is a software application that presents information to an operator or user about the state of a process, and to accept and implement the operators control instructions. Typically information is displayed in a graphical format.

10. ICSC: Instrumentation and control system contractor: Subcontractor who specializes in the design, construction, fabrication, software development, installation, testing, and commissioning of industrial instrumentation and control systems.
11. IJB: Instrument junction boxes: A panel designed with cord sets to easily remove, replace, or relocate instrument signals.
12. I/O: Input/Output.
13. IP: Internet protocol or ingress protection.
14. LCP: Local control panel: Operator interface panel that may contain an HMI, pilot type control devices, operator interface devices, control relays, etc. and does not contain a PLC or RIO.
15. LAN: Local area network: A control or communications network that is limited to the physical boundaries of the facility.
16. LOI: Local Operator Interface is an operator interface device consisting of an alphanumeric or graphic display with operator input functionality. The LOI is typically a flat panel type of display mounted on the front of an enclosure with either a touch screen or tactile button interface.
17. LOR: Local-Off-Remote control function. In the Remote mode, equipment is started or stopped, and valves are opened or closed through the PLC based upon the selection of the HOA. In the Local mode, equipment is started or stopped, valves are opened or closed based upon hardwired control circuits completely independent of the PLC with minimum interlocks and permissive conditions. In the Off mode, the equipment is prohibited from responding to any control commands.
18. NJB: Network junction box. An enclosure that contains multiple access points to various networks within the facility. Networks could be Ethernet, Ethernet/IP, Fieldbus, RIO, etc.
19. P&ID: Process and instrumentation diagram.
20. PC: Personal computer.
21. PCIS: Process control and instrumentation system: Includes the entire instrumentation system, the entire control system, and all of the Work specified in the Instrumentation and Control Specifications and depicted on the Instrumentation Drawings. This includes all the PCS and instruments and networking components as well as the various servers, workstations, thin clients, etc.
22. PCM: Process control module: An enclosure containing any of the following devices: PLC, RTU, or RIO.
23. PCS: Process Control System: A general name for the computerized system that gathers and processes data from equipment and sensors and applies operational controls to the process equipment. It includes the PLCs and/or RIOs, LOIs, HMIs, both LCS/LCPs, VCPs and all data management systems accessible to staff.
24. PJB: Power junction box: An enclosure with terminal blocks that distribute power to multiple instruments.
25. PLC: Programmable logic controller.
26. PS: Power supply.
27. RIO: Remote I/O device for the PLC consisting of remote I/O racks, or remote I/O blocks.
28. RTU: Remote telemetry unit: A controller typically consisting of a PLC, and a means for remote communications. The remote communications devices typically are radios, modems, etc.
29. SCADA: Supervisory control and data acquisition system: A general name for the computerized system that gathers and processes data from sensors and equipment located outside of the facility, such as wells, lift stations, metering stations, etc.
30. SPDT: Single-pole, double-throw.
31. SPST: Single-pole, single-throw.
32. UPS: Uninterruptible power supply.
33. VCP: Vendor control panel: Control panels that are furnished with particular equipment by a vendor other than the ICSC. These panels may contain PLCs, RIO, LOI, HMI, etc.

34. WAN: Wide area network: A control or communications network that extends beyond the physical boundaries of the facility.

1.4 SUBMITTALS

A. Furnish submittals as specified in the Submittal Procedures section and this Section.

B. General:
   1. Instruct all equipment suppliers of submittals and operation and maintenance manuals of the requirements in this Section.
   2. Furnish the submittals required by each section in the Instrumentation Specifications.
   3. Adhere to the wiring numbering scheme specified in the Identification for Electrical Systems Section throughout the Project:
      a. Uniquely number each wire.
      b. Wire numbers must appear on all Equipment Drawings.
   4. Use equipment and instrument tags, as indicated on the Drawings, for all submittals.

C. Submittal organization:
   1. First page:
      a. Specification section reference.
      b. Name and telephone number of individual who reviewed submittal before delivery to Engineer.
      c. Name and telephone number of individual who is primarily responsible for the development of the submittal.
      d. Comments.
      e. Contractor's review certification statement and signature.
   2. Next pages:
      a. Provide confirmation of specification compliance:
         1) Specification section: Include with each submittal a copy of the relevant specification section.
            a) Indicate in the left margin, next to each pertinent paragraph, either compliance with a check (√) or deviation with a consecutive number (1, 2, 3).
            b) Provide a list of all numbered deviations with a clear explanation and reason for the deviation.
      b. Include a response in writing to each of the Engineer's comments or questions for submittal packages which are re-submitted:
         1) In the order that the comments or questions were presented throughout the submittal.
         2) Referenced by index section and page number on which the comment appeared.
         3) Acceptable responses to Engineer's comments are either:
            a) Engineer's comment or change is accepted and appropriate changes are made.
            b) Explain why comment is not accepted or requested change is not made.
            c) Explain how requirement will be satisfied in lieu of comment or change requested by Engineer.
         4) Any re-submittal, which does not contain responses to the Engineer's previous comments shall be returned for Revision and Re-submittal.
         5) No further review by the Engineer will be performed until a response for previous comments has been received.
   3. Remaining pages:
      a. Actual submittal data:
         1) Organize submittals in exactly the same order as the items are referenced, listed, and/or organized in the specification section.

2) For submittals that cover multiple devices used in different areas under the same specification section, the submittal for the individual devices must list the area where the device is intended to be used.

D. Submittal requirements:
1. Furnish submittals that are fully indexed with a tabbed divider for every component.
2. Sequentially number pages within the tabbed sections. Submittals and operation and maintenance manuals that are not fully indexed and tabbed with sequentially numbered pages, or are otherwise unacceptable, will be returned without review.
3. Furnish submittals in the following general order, each in a separate bound set:
   a. Schedule of Values.
   b. Product Data.
   c. After Engineer acceptance of the Product Data, submit the Project Shop Drawing submittals.
   d. Loop Description Submittal.
   e. The Process Control Hardware and Software Submittal including, control system software, programming, and screens.
   f. Testing, Calibration and Process Start-Up procedures.
   g. Operation and Maintenance Data.
   h. Training Submittals.
   i. Record Documents.
4. Edit all submittals and operation and maintenance manuals so that the submittal specifically applies to only the equipment furnished.
   a. Neatly cross out all extraneous text, options, models, etc. that do not apply to the equipment being furnished, so that the information remaining is only applicable to the equipment being furnished.
5. Submit copies of shop drawings, and product data:
   a. Show dimensions, construction details, wiring diagrams, controls, manufacturers, catalog numbers, and all other pertinent details.
6. Where submittals are required, provide a separate submittal for each specification section. In order to expedite construction, the Contractor may make more than 1 submittal per specification section, but a single submittal may not cover more than 1 specification section:
   a. The only exception to this requirement is when 1 specification section covers the requirements for a component of equipment specified in another section. (For example, circuit breakers are a component of switchgear. The switchgear submittal must also contain data for the associated circuit breakers, even though they are covered in a different specification section.)
7. Exceptions to Specifications and Drawings:
   a. Include a list of proposed exceptions to the Specifications and Drawings along with a detailed explanation of each.
   b. If there is insufficient explanation for the exception or deviation, the submittal will be returned requiring revision and re-submittal.
   c. Acceptance of any exception is at the sole discretion of the Engineer.
      1) Provide all items (materials, features, functions, performance, etc.) required by the Contract Documents that are not accepted as exceptions.
   d. Replace all items that do not meet the requirements of the Contract Documents, which were not previously accepted as exceptions, even if the submittals contained information indicating the failure to meet the requirements.

E. Submittal preparation:
1. During the period of preparation of submittals, the Contractor shall authorize direct, informal liaison between the ICSC and the Engineer for exchange of technical information. As a result of this liaison, certain minor refinements and revisions may be authorized informally by the Engineer, which do not alter the scope of Work or cause increase or decrease in the Contract price or times. During this informal exchange, no

oral statement by the Engineer shall be construed to give formal approval of any component or method, nor shall any statement be construed to grant exception to, or variation from, these Contract Documents.

2. In these Contract Documents, some items of Work are represented schematically, and are designated for the most part by numbers, as derived from criteria in ISA-5.1:
    a. Employ the nomenclature and numbers designated in this Section and indicated on the Drawings exclusively throughout shop drawings, data sheets, and similar submittals.
    b. Replace any other symbols, designations, and nomenclature unique to a manufacturer's, suppliers, or subcontractor's standard methods with those identified in this Section and indicated on the Drawings.

F. Specific submittal requirements:
    1. Shop drawings:
        a. Required for materials and equipment listed in this and other sections.
        b. Furnish sufficient information to evaluate the suitability of the proposed material or equipment for the intended use, and for compliance with these Specifications.
        c. Shop drawings requirements:
            1) Front, side, and, rear elevations, and top and bottom views, showing all dimensions.
            2) Locations of conduit entrances and access plates.
            3) Component layout and identification.
            4) Schematic and wiring diagrams with wire numbers and terminal identification.
            5) Connection diagrams, terminal diagrams, internal wiring diagrams, conductor size, etc.
            6) Anchoring method and leveling criteria, including manufacturer's recommendations for the Project site seismic criteria.
            7) Weight.
            8) Finish.
            9) Nameplates:
                a) As specified in the Identification for Electrical Systems Section or as indicated on the Drawings.
            10) Temperature limitations, as applicable.
        d. Use equipment and instrument tags as depicted on the P&IDs for all submittals.
        e. Adhere to wiring numbering scheme outlined in the Identification for Electrical Systems Section throughout the Project:
            1) Uniquely number each wire per the Specifications.
        f. Wire numbers must appear on all equipment drawings.
        g. Organize the shop drawing submittals for inclusion in the Operation and Maintenance Manuals:
            1) Furnish the initial shop drawing submittal bound in one or more standard size, 3-ring, D-ring, loose-leaf, vinyl plastic, hard-cover binders suitable for bookshelf storage.
            2) Binder ring size: 2 inches.
        h. Include the letterhead and/or title block of the firm responsible for the preparation of all shop drawings. Include the following information in the title block, as a minimum:
            1) The firm's registered business name.
            2) Firm's physical address, email address, and phone number.
            3) Owner's name.
            4) Project name and location.
            5) Drawing name.
            6) Revision level.
            7) Personnel responsible for the content of the drawing.
            8) Date.

i. The work includes modifications to existing circuits:
    1) Clearly show all modifications to existing circuits.
    2) In addition, show all existing unmodified wiring to clearly depict the functionality and electrical characteristics of the complete modified circuits.

2. Product data:
    a. Submitted for non-custom manufactured material listed in this and other sections and shown on shop drawings.
    b. Include:
        1) Catalog cuts.
        2) Bulletins.
        3) Brochures.
        4) Quality photocopies of applicable pages from these documents.
        5) Identify on the data sheets the Project name, applicable specification section, and paragraph.
        6) Identify model number and options for the actual equipment being furnished.
        7) Neatly cross out options that do not apply or equipment not intended to be supplied.
    c. Use equipment and instrument tags as depicted on the P&IDs for all submittals.
    d. Adhere to wiring numbering scheme outlined in the Identification for Electrical Systems Section throughout the Project:
        1) Uniquely number each wire per the Specifications.
    e. Wire numbers must appear on all equipment drawings.
3. Detailed sequence of operation for all equipment or systems.
4. Operation and maintenance manuals:
    a. As specified in the Operation and Maintenance Data Section.
    b. Submit preliminary sets of these manuals to the Engineer for review of format and content:
        1) Engineer will return 1 set with comments.
        2) Revise and/or amend as required and submit the requisite number of copies to the Engineer 15 days before Functional Testing of the systems.
    c. Incorporate changes that occur during process start-up and submit as part of the final manuals.
    d. Provide comprehensive information on all systems and components to enable operation, service, maintenance, and repair.
    e. Include Record Documents and the accepted shop drawing submittals, modified for conditions encountered in the field during the work.
    f. Include signed results from Functional Testing and Process Operational Period.
    g. Provide installation, connection, operating, calibration, setpoints (e.g., pressure, pump control, time delays, etc.), adjustment, test, troubleshooting, maintenance, and overhaul instructions in complete detail.
    h. Provide exploded or other detailed views of all instruments, assemblies, and accessory components together with complete parts lists and ordering instructions.
    i. Spare parts list:
        1) Include a priced list of recommended spare parts for all the equipment furnished under this Contract:
            a) Include recommended quantities sufficient to maintain the furnished system for a period of 5 years.
        2) Annotate the list to indicate which items, if any and quantity are furnished as part of this Contract.
    j. Provide the name, address, and phone number of manufacturer and manufacturer's local service representative of these parts.
    k. Additional operation and maintenance manual requirements:
        1) Completely index manuals with a tab for each section:
            a) Each section containing applicable data for each piece of equipment, system, or topic covered.

b) Assemble manuals using the accepted shop drawings, and include, the following types of data:
(1) Complete set of 11-inch by 17-inch drawings of equipment.
(2) Complete set of 11-inch by 17-inch drawings of the control system.
(3) Complete set of control schematics.
(4) Complete parts list for all equipment being provided.
(5) Catalog data for all products or equipment furnished.

l. Operational Manual:
1) Prepare and provide a simplified version of the standard manufacturer's HMI software and system operations manual that includes basic instructions in the application of the system as required for operators in day-to-day operations.

m. Control System Software Record Documents:
1) Include complete documentation of all the software programs provided for the entire control and PCS system, including:
a) Listings of all application software on both hard copy and DVD, DVD-ROM, and CD-ROM.
b) Database, both hard copy and DVD, DVD-ROM, and CD-ROM.
c) Communication protocols.
d) All documentation necessary to maintain, troubleshoot, modify, or update the software system.

n. Organize the operation and maintenance manuals for each process in the following manner:
1) Section A - Process and Instrumentation Diagrams.
2) Section B - Control Descriptions.
3) Section C - Loop Drawings.
4) Section D - Instrument Summary.
5) Section E - Instrument Data Sheets and Brochures.
6) Section F - Sizing Calculations.
7) Section G - Instrumentation Installation Details.
8) Section H - Test Results.
9) Section I - Operational Manual.
10) Section J - Spare Parts List.
11) Section K - Control System Software.

5. Material and equipment schedules:
a. Furnish a complete schedule and/or matrix of all materials, equipment, apparatus, and luminaries that are proposed for use:
1) Include sizes, names of manufacturers, catalog numbers, and such other information required to identify the items.

6. Itemized instrument summary:
a. Submit a hard copy of the instrument summary.
b. List all of the key attributes of each instrument including:
1) Tag number.
2) Manufacturer.
3) Model number.
4) Service.
5) Area location.
6) Calibrated range.
7) Loop drawing number.
c. Associated LCS/LCP, VCP, PCM, or PLC.

7. Instrument data sheets and cut sheets:
a. Furnish fully completed data sheets, both electronically in Microsoft Word or Excel and in hard copy, for each instrument and component according to ISA-20 Specification Forms for Process Measurement and Control Instruments, Primary

Elements and Control Valves. The data sheets provided with the instrument specifications are preliminary and are not complete. They are provided to assist with the completion of final instrument data sheets. Additional data sheets may be required. Include the following information on the data sheet:

1) Component functional description specified in this Section and indicated on the Drawings.
2) Manufacturers model number or other product designation.
3) Tag number specified in this Section and indicated on the Drawings.
4) System or loop of which the component is a part.
5) Location or assembly at which the component is to be installed.
6) Input and output characteristics, including digital bus communication.
7) Scale range with units and multiplier.
8) Requirements for electric supply.
9) Requirements for air supply.
10) Power consumption.
11) Response timing.
12) Materials of construction and of component parts that are in contact with, or otherwise exposed to, process media, and or corrosive ambient air.
13) Special requirements or features, such as specifications for ambient operating conditions.
14) Features and options that are furnished.

b. Provide a technical brochure or bulletin (“cut sheet”) for each instrument on the project. Submit with the corresponding data sheets:
   1) Where the same make and model of instrument is used in 2 or more applications on the project, and the process applications are nearly identical, and the materials, features and options are identical submit one brochure or bulletin for the set of identical instruments.
   2) Include a list of tag numbers for which it applies with each brochure or bulletin.
   3) Furnish technical product brochures that are complete enough to verify conformance with all Contract Document requirements, and to reflect only those features supplied with the device.
   4) Cross out models, features, options, or accessories that are not being provided.
   5) Clearly mark and identify special options and features.
c. Organization: Index the data sheets and brochures in the submittal by systems or loops.

8. Control panel hardware submittal:
   a. Submit the following in 1 submittal package.
   b. Complete and detailed bills of materials:
      1) Including quantity, description, manufacturer, and part number for each assembly or component for each control panel.
      2) Include all items within an enclosure.
   c. Complete grounding requirements for each system component including any requirements for PLCs, process LANs, and Control System equipment.
   d. Requirements for physical separation between control system components and 120 VAC, 480 VAC, and medium-voltage power cables.
   e. UPS and battery load calculations to show that the backup capacity and time meet the specified requirements.
   f. Provide a data sheet for each control system component together with a technical product brochure or bulletin, which include:
      1) The manufacturer's model number or other identifying product designation.
      2) Tag and loop number.
      3) System to which it belongs.
      4) Site to which it applies.
      5) Input and output characteristics.

6) Requirements for electric power.
7) Device ambient operating requirements.
8) Materials of construction.

9. Schedule of values:
   a. In addition to completing all items referred to in the schedule of values, submit per unit instrument and labor costs used in developing the final bid for the PCS system, for the express purpose of pricing and cost justification for any proposed change orders. It is the responsibility of the ICSC subcontractor to prove to the Engineer's satisfaction that said per unit costs were used in the development of the final Bid amount.
10. Installation recommendations:
    a. Submit the manufacturer's printed recommendations for installation of instrumentation equipment.
11. Training submittals:
    a. Develop and submit for review a general training plan for approval by Owner within 14 calendar days from Notice to Proceed. Include complete descriptions of all planned training classes, a preliminary training schedule, a list of all proposed instructors along with resumes, examples of proposed training manuals, and a description of any special training tools to be used (simulators, self-paced modules, personal computer-based training, etc.).
    b. The Engineer will review the general training plan. Special emphasis will be placed on review of the qualifications of the proposed instructors and the timing of the individual courses to maximize their effectiveness. If, in the opinion of the Engineer, the proposed instructors are not sufficiently qualified to conduct the specified training courses, or lack experience, where required, on the specific configuration of the system, provide more qualified instructors.
    c. The general training plan and schedule shall be updated by the Contractor at the beginning of each Phase and approved by the Owner a minimum of 30 days prior to commencement of training.
    d. Training course plan submittals:
       1) For each training course or other training activity, submit a detailed, complete outline and agenda for each lesson.
       2) Describe any student pre-requisites for the course or training activity.
       3) Provide an updated schedule for all sessions of the course, including dates, times, durations, and locations.
       4) Submit training materials.
    e. Incorporate all submittal review comments into the course.
    f. Do not conduct training courses before review and acceptance of the Course Plan submittal for the course.
12. Project Record documents:
    a. Record Drawing requirements:
       1) Provide Project Record Drawing of all Instrumentation Drawings.
       2) Update Record Drawings weekly.
       3) Record Drawings must be fully updated as a condition of the monthly progress payments.
       4) Clearly and neatly show all changes including the following:
          a) All existing pipe, conduit, wire, instruments or other structures encountered or uncovered during construction.
    b. Shop drawings:
       1) General:
          a) Coordinate all aspects of the Work so that a complete, instrumentation, computer, and control system for the facility is supported by accurate shop and record drawings:
             (1) Clearly show every wire, circuit, and terminal provided under this contract on one or more submitted wiring diagrams.

b) Show all interfaces between any of the following: instruments, vendor control panels, motor control centers, motor starters, variable speed drives, control valves, flow meters, chemical feeders, digital bus network equipment, and other equipment related to the PCS.
c) Generate all drawings developed for this project utilizing AutoCAD by Auto Desk Version 2012 or later:
(1) Furnish on CD-ROM disks containing the following for each drawing:
(a) Original CAD files in DWG format.
(b) PDF version.
(2) Provide hard copies on 11-inch by 17-inch plain bond paper.
d) Upon completion of the Work, update all shop drawings to indicate the final as-built configuration of the systems:
(1) Should an error be found in a shop drawing during installation or process start-up of equipment, note the correction, including any field changes found necessary, on the drawing and submit the corrections in the Record Documents.
(2) Update, check, and revise all wiring drawings and other submitted drawings and documents to show final installed conditions.
(3) Provide as-built shop drawings for all instrumentation equipment on 11-inch by 17-inch using plain bond paper.
(4) Provide electronic copies of these documents on CD-ROM disks in AutoCAD DWG 2010 format or later and PDF format. Size all drawings to be readable and legible on 11-inch by 17-inch media.
e) Submittal Documents:
(1) Provide an interim submittal of Record Documents after the PCS system Functional Testing.
(2) Submit final Record Documents before Substantial Completion or earlier if so specified in the Operation and Maintenance Data Section or the General Requirements Section.
f) Review and Corrections:
(1) Correct any Record Documents or other documents found to be incomplete, not accurate, of poor quality, or containing errors.
(2) Promptly correct and re-submit Record Documents returned for correction.
2) Furnish written information prepared specifically for this Project using Microsoft Word and.PDF formats and printed on 8.5-inch by 11-inch plain bond paper:
a) Provide electronic copies of these documents on CD-ROM disks.
c. Review and corrections:
1) Correct any record documents or other documents found to be incomplete, not accurate, of poor quality, or containing errors.
2) Promptly correct and re-submit record documents returned for correction.

13. Loop Drawings:
a. Submit loop drawings for every analog, discrete, and fieldbus signal and control circuit:
1) Provide a loop drawing submittal that completely defines and documents the contents of each monitoring, alarming, interlock, and control loop on this Project.
2) This requirement applies to all signal and control circuits associated with equipment on this Project including vendor supplied equipment packages and control panels.
3) Provide loop drawings in the format indicated in the contract drawings. Provide all tagging in accordance with the Owner’s standard.
b. Show every instrument and I/O point on at least one loop diagram.

c. Provide a complete index in the front of each bound volume:
    1) Index the loop drawings by systems or process areas.
d. Provide drawings showing definitive diagrams for every instrumentation loop system:
    1) Show and identify each component of each loop or system using requirements and symbols from ISA-5.4.
    2) Furnish a separate drawing sheet for each system or loop diagram.
e. In addition to the ISA-5.4 requirements, show the following details:
    1) Functional name of each loop.
    2) Reference name, drawing, and loop diagram numbers for any signal continuing off the loop diagram sheet.
    3) Show all terminal numbers, regardless of the entity providing the equipment.
    4) MCC panel, circuit, and breaker numbers for all power feeds to the loops and instrumentation.
    5) Designation of and, if appropriate, terminal assignments associated with, every manhole, pull-box, junction box, conduit, and panel through which the loop circuits pass.
    6) Show vendor control panel, instrument panel, conduit, junction box, equipment and PCS terminations, termination identification, wire numbers and colors, power circuits, and ground identifications.
    7) If a circuit is continued on another drawing, show the name and number of the continuation drawing on the loop drawing. Provide complete references to all continuation drawings whether vendor control panels, other loop drawings, existing drawings provided by the Owner, or other drawings.
f. In addition to the above requirements, provide loop diagrams in accordance with the example loop diagram as indicated on the Drawings.

14. Instrument Installation Drawings:
    a. Submit, instrument installation, mounting, and anchoring details for all components and assemblies, including access requirements and conduit connection or entry details.
    b. Furnish for each instrument a dedicated 8 1/2-inch by 11-inch installation detail that pertains to the specific instrument by tag number.
    c. For each detail, provide certification and the hard copies, by the instrument manufacturer, that the proposed installation is in accordance with the instrument manufacturer's recommendations and is fully warrantable.
    d. For each detail, provide, as a minimum, the following contents:
        1) Necessary sections and elevation views required to define instrument location by referencing tank, building or equipment names and numbers, and geographical qualities such as north, south, east, west, basement, first floor, etc.
        2) Ambient temperature and humidity where the instrument is to be installed.
        3) Corrosive qualities of the environment where the instrument is to be installed.
        4) Hazardous rating of the environment where the instrument is to be installed.
        5) Process line pipe or tank size, service and material.
        6) Process tap elevation and location.
        7) Upstream and downstream straight pipe lengths between instrument installation and pipe fittings and valves.
        8) Routing of tubing and identification of supports.
        9) Mounting brackets, stands, anchoring devices, and sun shades.
        10) Conduit entry size, number, location, and delineation between power and signal.
        11) NEMA ratings of enclosures and all components.
        12) Clearances required for instrument servicing.

13) List itemizing all manufacturer makes, model numbers, quantities, lengths required, and materials of each item required to support the implementation of the detail.

15. Control Panel Drawings:
    a. Layout Drawings:
        1) Submit panel, enclosure, console, furniture, and cabinet layout drawings for all items provided.
        2) As a minimum, include the following information:
            a) To scale front, side, and plan views.
            b) Dimensions.
            c) Interior and exterior arrangements.
            d) Mounting information, including conduit entrance location.
            e) Finish data.
            f) Tag number and functional name of items mounted in and on each panel, console, and cabinet.
            g) Nameplate legend including text, letter size, materials, and colors.
    b. Wiring and piping diagrams:
        1) Submit panel wiring and piping diagrams for every panel that contains wiring and/or piping.
        2) Include the following information:
            a) Name of panel.
            b) Wiring and piping sizes and types.
            c) Terminal strip numbers.
            d) Wire tags and labels.
            e) Functional name and manufacturer's designation for items to which wiring and piping are connected.
            f) Electrical control schematics in accordance with ANSI standards.
    c. Installation drawings:
        1) Provide site-specific installation drawings for all control equipment panels, including dimensions.
        2) Provide scaled drawings and show the position of the equipment at its intended installation location.
        3) Show the placement of all equipment being provided under this Contract and its spatial relationship to all other equipment located in the abutting and adjoining areas.
        4) Show all required access and clearances associated with the equipment with a statement of compliance to manufacturer's recommendations, NEC, and other applicable codes.
16. Schematic Diagrams:
    a. Submit schematic diagrams for all electrical equipment in ladder diagram format.
    b. Include device and field connection terminal numbers on all schematic diagrams.
    c. Incorporate equipment manufacturer’s shop drawing information into the schematic diagrams in order to document the entire control system.
17. Control System Diagram:
    a. Submit a complete set of control system diagrams including the following information:
        1) All PLCs, workstations, printers, communication devices, and communication links:
            a) Show all PLCs with their current I/O allocation, and future I/O allocation, current plus spares provided, and maximum potential I/O based on available slots.
        2) All cables required for communication requirements.
        3) Show each component fully annotated with conduit size and number associated with the power source.
18. Process Control Software Submittal:
    a. In accordance with Product Data and Shop Drawing general requirements.

b. Submit a complete description of the standard application software programs, operating system and utility programs, including modifications and explanation of how the specific functional requirements are met:
    1) Provide a cross-reference between the Specification requirements and the software submittal, in order to provide the Engineer the ability to identify how each specified requirement or function is met.
c. A complete listing of the PCS system point I/O database:
    1) Include for each data point, relevant parameters such as range, contact orientation, limits, incremental limits, I/O card byte, I/O hardware address, and PLC assignment.
    2) Organize on a site-by-site basis, separate by point type.
    3) In addition to the active I/O points, list the implemented spare I/O points and the available I/O points remaining on each card, as well as other defined future points specified or shown.
    4) Upon completion of the Work, update all I/O lists to indicate the final as-built configuration of the systems:
        a) Organize as-built I/O list on a site-by-site basis, separated by equipment and point type.
d. Detailed descriptions of procedures used to implement and modify control strategies and database construction.
e. Preliminary overview, screens, station graphic displays, and preliminary reports.

19. Instrumentation and Control System Contractor Statement of Qualifications:
    a. Submit statement of qualifications of the proposed ICSC in accordance with subsequent requirements of this Section.
20. Control Descriptions:
    a. For each control loop, provide a detailed functional description of the operation of the equipment, signals, and controls as shown on the P&IDs:
        1) Include all functions depicted or described in the Contract Documents.
        2) Include within the Control Description content:
            a) All specific requirements.
            b) All common requirements that pertain in general to all loops.
            c) Listing all ranges, setpoints, timers, values, counter values, etc.
21. Test Procedure Submittals:
    a. Submit the proposed procedures to be followed during tests of the PCS and its components in 2 parts:
        1) Preliminary Submittal: Outline of the specific proposed tests and examples of proposed forms and checklists.
        2) Detailed Submittal: After successful review of the Preliminary Submittal, submit the proposed detailed test procedures, forms, and checklists. Include a statement of test objectives with the test procedures.
22. Test reports:
    a. As specified in the Submittal Procedures Section.

1.5 QUALITY ASSURANCE

A. Manufacture instruments at facilities certified to the quality standards of ISO 9001.

B. ICSC qualifications:
1. General information on the proposing company:
    a. Document that the ICSC Company has been actively involved in the instrumentation, PLC-based control systems business for a minimum of five years and has adequate facilities, organization structure, manpower, and technical and managerial expertise to properly perform the Work as specified in these Specifications.
2. Document that the ICSC has a qualified permanent service facility:

a. Said facility shall be staffed with permanent employees and equipped with the tools and test equipment necessary to calibrate, test, and process start-up all of the instrumentation, control, telemetry, SCADA and control systems hardware and software furnished under this Contract, including remote diagnostic capability.
b. Document in-house resource of permanent personnel experienced in the design and programming of equipment and systems as specified in these Specifications.
c. Document the existence of a training program staffed by qualified instructors, to provide proper training in the operation and maintenance of equipment as specified in these Specifications.
d. Document that the firm is a recognized or certified “system integrator partner” or similar designation for the control software and PLC system being supplied for this Project.

3. Similar project experience of the company:
   a. Provide a list of at least 3 successfully completed projects for a water and/or wastewater system of similar scope and complexity in which the proposing firm used components the same as those intended for use on this Project. The proposing firm must have performed, for each listed project, system engineering, system fabrication and installation, documentation (including schematic, wiring and panel assembly drawings), software configuration and documentation, field testing, calibration and process start-up, operator instruction, and maintenance training. In addition, provide the following information for each project:
      1) Name of plant or system owner, contact name, and current telephone number. Design engineer’s name, address, and telephone number. Failure to provide current contact information may result in the listed project being disqualified for use in meeting the minimum requirements for prequalification.
      2) Manufacturer and model number(s) of the PLC based control system and the computer-based SCADA system used for both hardware and software.
      3) Brief description of the system.
      4) Approximate number of input and output signals: analog, digital, and fieldbus.
      5) Brief application software description.
      6) Contracted cost of the system, separate by base amount and any change orders for the completed projects.
      7) Duration of the project and date of completion.
4. Information on the proposed Project team members:
   a. Provide the name and resume of the individual persons who will be responsible for each of the following:
      1) Office engineering and management of this Project.
      2) Lead for software configuration/programming.
      3) Individual who will be responsible for the hardware and hardware interface design.
      4) Individual who will be responsible for field testing, calibration, and process start-up.
      5) Individual who will be responsible for operator training.
   b. All of these individuals must be permanent employees of the proposing firm.
5. Determination of the proposed ICSC qualifications is at the sole discretion of the Engineer.

C. Furnish all equipment listed by and bearing the label of UL or of an independent testing laboratory acceptable to the Engineer and the Authority Having Jurisdiction.

D. The ICSC must have their own operating UL listed panel fabrication facility. All panels must be fabricated at this facility and meet all UL 508/508A requirements.

E. ICSC:
   1. Contractor, through the use of a qualified ICSC, is responsible for the implementation of the PCIS and the integration of the system with other required instrumentation, control devices, and software.
   2. The ICSC assumes full responsibility, through the Contractor, to perform all work to select, furnish, install, program, test, calibrate, and place into operation all instrumentation, controls, telemetry equipment, control panels, and control system including application software, for a complete, integrated and functional PCIS system.
   3. Due to the complexities associated with the interfacing of numerous control system devices, it is the intent of these Specifications that the ICSC be responsible for the integration of the PCIS with existing devices and devices provided under the Contract Documents with the objective of providing a completely integrated control system.

1.6 DELIVERY, STORAGE, AND HANDLING

A. Special instructions:
   1. Securely attach special instructions for proper field handling, storage, and installation to each piece of equipment before packaging and shipment.

B. Tagging:
   1. Tag each component and/or instrument to identify its location, instrument tag number, and function in the system.
   2. Firmly attach a permanent tag indelibly machine marked with the instrument tag number, as given in the tabulation, on each piece of equipment constituting the PCS.
   3. Tag instruments immediately upon receipt in the field.
   4. Prominently display identification on the outside of the package.
   5. Utilize the Tag and Loop Number identifications shown on the P&IDs.

C. Delivery and inspection:
   1. Deliver products in undamaged condition, in manufacturer's original container or packaging with identifying labels intact and legible. Include date of manufacture on label.

1.7 PROJECT OR SITE CONDITIONS

A. Site conditions:
   1. Provide a PCS, including all equipment, raceways, and any other components required for a complete installation that meets the environmental conditions for the Site as specified in the General Requirements and below.
   2. Seismic classification:
      a. Provide all equipment and construction techniques suitable for the seismic requirements for the site, as specified .
   3. Wind:
      a. Provide all equipment and construction techniques suitable for the site wind loading criteria, as specified.
   4. Altitude, temperature and humidity:
      a. As specified.
      b. Provide all equipment and instrumentation fully rated for continuous operation at this altitude, temperature and humidity conditions with no additional derating factors applied.
      c. Provide additional temperature conditioning equipment to maintain all equipment and instrumentation in non-conditioned spaces or outdoors subject to these ambient temperatures 10 degrees Fahrenheit above the minimum operating temperature and 10 degrees Fahrenheit below maximum operating temperature as determined by the equipment manufacturer's guidelines:

1) Provide all power wiring for these devices (e.g., heaters, fans, etc.), whether or not indicated on the Drawings.

5. Area classifications:
   a. Furnish enclosures that match the area classifications as specified in the Common Work Results for Electrical Section.

1.8 SEQUENCING

A. General:
   1. Testing requirements are specified in the Commissioning for Instrumentation and Controls Section.

B. Pre-submittal conferences:
   1. Before producing any submittals, schedule a pre-submittal conference for the purposes of reviewing the entire project, equipment, control philosophy, schedules, and submittal requirements.
   2. The Contractor, instrumentation and control subcontractor, electrical subcontractor, and all manufacturers furnishing major pieces of equipment must attend, including but not limited to:
      a. Vendor control panels.
      b. Chemical feed systems.
      c. Motor control centers.
      d. Switchgear.
      e. Variable frequency drives.
      f. Lighting.
      g. Engine generators.

C. Installation testing:
   1. Commence after acceptance of all training, wire test, calibration tests, and loop validation tests, and all inspections have demonstrated that the PCIS complies with all Contract requirements.
   2. Acceptance of the PCIS Installation testing must be provided in writing by the Owner before the performance testing may begin.

D. Functional testing:
   1. Representatives from each of the following groups shall be in attendance during the functional Testing: Programmer. Commence after acceptance of all training, wire test, calibration tests, and loop validation tests, and all inspections have demonstrated that the PCIS complies with all Contract requirements.
   2. Loop validation test.
   3. As specified in the Commissioning for Instrumentation and Controls Section.
      a. Notify the Owner of scheduled tests a minimum of 21 days before the estimated completion date of installation and wiring of the PCIS.
      b. Complete loop validation testing a minimum of 5 days before the pre-commissioning phase of the project.
      c. Loop validation certifications:
         1) After the field device loop tests have been successfully completed as specified in the Commissioning for Instrumentation and Controls Section for all individual instruments, all separate analog control networks, all valves, all VCPs, all motors, all local operator interface panels, all motor control centers, etc., submit a certified copy of all test forms signed by the Contractor, Vendor, with test data entered, together with a clear and unequivocal statement that all instrumentation, including all control and signal wiring, has been successfully calibrated, inspected, and tested.

E. Provide all special tools and spare parts, as specified in the Maintenance paragraph of this Section, before Process Operational Period commences, suitably wrapped, and identified.

F. Process Operational Period:
   1. Upon completion of the Process Operational Period, conduct an Instrumentation and Controls Process Performance Test as a condition for Project final completion.

1.9 SCHEDULING (NOT USED)

1.10 WARRANTY

A. Provide additional warranty as specified in the individual Instrumentation and Control Specifications that extends beyond the Correction Period.

1.11 SYSTEM PROCESS START-UP

A. Replace or modify equipment, software, and materials that do not achieve design requirements after installation in order to attain compliance with the design requirements:
   1. Following replacement or modification, retest the system and perform additional testing to place the complete system in satisfactory operation and obtain compliance acceptance from the Engineer.

1.12 OWNER'S INSTRUCTIONS (NOT USED)

1.13 MAINTENANCE

A. Before Substantial Completion, perform all maintenance activities required by the Contract Documents including any calibrations, final adjustments, component replacements or other routine service required before placing equipment or systems in service.

B. Furnish all spare parts as required by the Contract Documents.

C. Provide additional spare parts specified in other sections of the Instrumentation and Control Specifications.

D. Submit all special tools and spare parts, suitably wrapped and identified, before Process Operational Period commences.

PART 2 PRODUCTS

2.1 MANUFACTURERS

A. Provide similar items from a single manufacturer throughout the PCIS portion of the Project.

B. Allowable manufacturers are specified in individual instrument and equipment specifications.

2.2 SYSTEM DESCRIPTION

A. General requirements:
   1. The Work includes everything necessary for and incidental to executing and completing the instrumentation and control system work indicated on the Drawings and specified in the Specifications and reasonably inferable there from including but not limited to:
      a. Preparing hardware submittals for field instrumentation.

b. Design, develop, and draft loop drawings, control panel designs, and all other drawing submittals specified in the Instrumentation and Control Specifications.
c. Prepare the test plan, the training plan, and the spare parts submittals.
d. Procure all hardware.
e. Fabricate panels.
f. Perform factory tests on panels.
g. Perform bench calibration and verify calibration after installation.
h. Oversee and certify installation of the PCS system.
i. Oversee, document, and certify loop testing.
j. Oversee, document, and certify system.
k. Installation Testing.
l. Oversee and document Functional Testing.
m. Conduct the Process Operational Period and the Instrumentation and Controls Process Performance Testing.
n. Prepare operation and maintenance manuals.
o. Conduct training classes.
p. Integrate the PCS with instrumentation and control devices provided under other sections.
q. Provide Record Drawings and Loop Drawings associated with Instruments and equipment:
    1) As specified in the Contract Documents.
    2) For Owner furnished items.
    3) For interfaces with existing equipment.
r. Resolve signal, power, or functional incompatibilities between the PCS and interfacing devices.
s. Perform all required corrective and preventative maintenance.

2. It is the intent of these Specifications that the entire electrical power, instrumentation, and control system be complete and operable. Provide all necessary material and labor for the complete system from source of power to final utilization equipment, including all connections, testing, calibration of all equipment furnished by others, as well as equipment furnished by the Contractor, whether or not specifically mentioned but which are necessary for successful operation.
3. Coordinate all aspects of the Work between Contractor and all subcontractors before bidding to ensure that all costs associated with a complete installation are included. The Owner is not responsible for any change orders due to lack of coordination of the Work between the Contractor, the ICSC, the other subcontractors, or suppliers.
4. Furnish detailed, complete, and thorough operations and maintenance documentation, including but not limited to operations manuals, maintenance manuals, as-built wiring drawings, training manuals, as-built software documentation, and all other documentation required to operate, modify, and maintain all parts of the PCS.
5. Revise in a manner as directed by the Engineer all I/O and addressing that the Engineer determines to be unacceptable as a result of a lack of Contractor coordination between Contract Documents and all suppliers.

2.3 EXISTING PRODUCTS (NOT USED)

2.4 MATERIALS

A. Furnish all materials under this Contract that are new, free from defects, and standard products produced by manufacturers regularly engaged in the production of these devices and that bear all approvals and labels as required by the Specifications.

B. Provide materials complying with the applicable industrial standard as specified in the Contract Documents.

2.5 MANUFACTURED UNITS (NOT USED)

2.6 EQUIPMENT (NOT USED)

2.7 COMPONENTS

A. Furnish all meters, instruments, and other components that are the most recent field proven models marketed by their manufacturers at the time of submittal of the shop drawings unless otherwise specified to match existing equipment.

B. Unless otherwise specified, furnish individual instruments that have a minimum accuracy of within 0.5 percent of full scale and a minimum repeatability of within 0.25 percent of full scale.

C. Signal transmission:
   1. Analog signals:
      a. Furnish analog measurements and control signals that vary in direct linear proportion to the measured variable, unless otherwise indicated.
      b. Furnish electrical analog signals outside control panels that are 4-to-20 milliamperes 24 VDC, except as indicated.
      c. Electrically or optically isolate all analog signals from other signals.
      d. Furnish regulated analog signals that are not affected by changes in supply voltage or load resistance within the unit's rating.
      e. Maintain the total 4-to-20 milliamperes loop impedance to 10 percent below the published value at the loop operating voltage.
      f. Where necessary, reduce loop impedance by providing current-to-current (I/I) isolation amplifiers for signal re-transmission.
   2. Discrete input signals:
      a. As indicated in the controller hardware specification.
   3. Discrete output signals:
      a. Dry contacts or TRIAC outputs (with express written approval by the Engineer) as needed to coordinate with the field device.
      b. Provide external terminal block mounted fuse with blown fuse indication for all discrete outputs.
      c. Provide interposing relays for all discrete outputs for voltage and/or current compatibilities.
      d. Provide interposing relays as required for functionality of the control circuit.
   4. Signal performance and design criteria:
      a. Stability:
         1) After Controls have taken corrective action, oscillation of the final control element shall not exceed 2 cycles per minute or a magnitude of motion of 0.5 percent of full travel.
      b. Response:
         1) Any change in setpoint or controlled variable shall produce a corrective change in position of the final control element and stabilized within 30 seconds.
      c. Agreement:
         1) Setpoint indication of controlled variable and measured indication of controlled variable shall agree within 3 percent of full scale over a 6:1 operating range.
      d. Repeatability:
         1) For any repeated magnitude of control signal, from either an increasing or decreasing direction, the final control element shall take a repeated position within 0.5 percent of full travel regardless of force required to position the final element.
      e. Sensitivity:
         1) Controls shall respond to a setpoint deviations and measured variable deviations within 1.0 percent of full scale.

f. Performance:
1) All instruments and control devices shall perform in accordance with the manufacturers' specifications.

D. Discrete circuit configuration:
1. Configure discrete control circuits to fail safe, on loss of continuity or loss of power.
2. Alarm contacts: Fail to the alarm condition.
3. Control contacts fail to the inoperative condition unless otherwise indicated on the Drawings.

E. Grounding:
1. Analog signal cables shields shall only be grounded at a single point in the loop. Unless otherwise noted, ground signal cable shields at control panel.
2. For communication and data line signal cable shields and drain wires should be grounded at both ends of the cable.
3. Insulate the shielding and exposed drain wire for each signal cable with heat-shrink tubing.
4. Terminate the signal cable shield on a dedicated grounding terminal block.
5. Provide isolating amplifiers within control panels for field equipment possessing a grounded input or output, except when the panel circuit is galvanically isolated.

2.8 ACCESSORIES

A. Provide flow conditioning devices or other required accessories if necessary to meet the accuracy requirements in the Contract Documents.

B. Nameplates:
1. Provide a nameplate for each controller, instrument transducer, instrument power supply, solenoid, or any other control device located either in the field or within panels.
2. All nameplates shall be of identical style, color, and material throughout the facility.
3. Device nameplates shall include:
a. Designations as indicated on the Drawings and identified on the Process and Instrumentation Drawings.
1) Device tag and loop number ID (e.g., FIT-60.011).
2) PLC ID (e.g., PLC-11).
3) Power information (e.g., PCM-11, 120 VAC).
b. White lettering on a black background, laminated plastic.
4. All instruments shall be equipped with Type 316 stainless steel nameplate with the instrument tag stamped in 3/8-inch letters and connected to the instrument using Type 316 stainless steel wire.

2.9 MIXES (NOT USED)

2.10 FABRICATION (NOT USED)

2.11 FINISHES (NOT USED)

2.12 SOURCE QUALITY CONTROL

A. Provide all equipment that is new, free from defects, and standard products produced by manufacturers regularly engaged in the production of these products that bear all approvals and labels as required by the Specifications.

B. Arrange with all manufacturers of the equipment and fabricators of panels and cabinets, to allow the Owner and Engineer to inspect and witness the testing of the equipment at the site of fabrication:
   1. Equipment includes the cabinets, special control systems, flow measuring devices, and other pertinent systems and devices.

C. Source Test is specified in the Commissioning for Instrumentation and Controls Section.

PART 3 EXECUTION

3.1 EXAMINATION

A. The ICSC is encouraged to attend a pre-bid conference and examine the premises completely before bidding. It is the ICSC's responsibility to be fully familiar with the existing conditions and local requirements and regulations.

B. Review the existing Site conditions and examine all shop drawings for the various items of equipment in order to determine exact routing and final terminations for all wiring and cables.

C. Provide a complete instrumentation and control system:
   1. Install all extra conduits, cables, and interfaces as may be necessary to provide a complete and operating electrical, and process control and instrumentation system.

3.2 PREPARATION (NOT USED)

3.3 INSTALLATION

A. Equipment locations indicated on the Drawings may change due to variations in equipment size or minor changes made by others during construction:
   1. Verify all dimensions as indicated on the Drawings:
      a. Actual field conditions govern all final installed locations, distances, and levels.
   2. Review all information indicated on the Drawings, including architectural, structural, mechanical, instrumentation, and the accepted electrical, instrumentation, and mechanical shop drawings, and coordinate Work as necessary to adjust to all conditions that arise due to such changes.
   3. Make minor changes in location of equipment before rough in, as directed by the Owner or Engineer.

B. Perform all related Electrical Work in accordance with the applicable sections of the Electrical Specifications.

C. The PCIS configurations are diagrammatic:
   1. The locations of equipment are approximate unless dimensioned.
   2. Where Project conditions require, make reasonable changes in locations and arrangements.

D. Field instruments installation:
   1. Install field instruments as specified in the Contract Documents, API RP 550 and RP 551, and the manufacturer’s instructions.
   2. Mount field instruments so that they can be easily read, readily approached, and easily serviced, and so they do not restrict access to mechanical equipment:
      a. Mount field instruments on a pipe stand or local panel, if they are not directly mounted, unless otherwise indicated on the Drawings.

b. Provide sun shields for all field electronic instruments located outdoors.

3. Make connections from rigid conduit systems to field instruments with PVC coated flexible conduit:
   a. Type of flexible conduit required for the area classification:
      1) Area classification as specified in the Common Work Results for Electrical Section.
   b. Maximum length of 18 inches.
4. Connect field instruments with cable as specified in the Electrical Specifications, except when the manufacturer requires the use of special cable, or otherwise specified in this Section:
   a. Special cable applications shall be in accordance with the NEC.
5. Verify the correctness of each installation:
   a. Polarity of electric power and signal connections.
6. Ensure all process connections are free of leaks.
7. Provide a power disconnect switch for each 120 VAC powered instrument which does not have a built-in power disconnect:
   a. Disconnect enclosure suitable for the area classification:
      1) As specified in the Common Work Results for Electrical Section.

E. Equipment tie-downs:
   1. Anchor all instruments, control panels, and equipment by methods that comply with seismic and wind bracing requirements, which apply to the Site.
   2. All control panels, LCS/VCPs, LCPs, RTUs, PCMs, etc., shall be permanently mounted and tied down to structures.

F. Instrument tagging:
   1. As specified in the Identification for Electrical Systems Section.
   2. Provide all field-mounted instruments with nameplates:
      a. Nameplates engraved with the instrument's full tag number as indicated on the Drawings:
         1) Affix tags with stainless steel wire fasteners.
   3. Provide all back of panel instruments with nameplates:
      a. Engraved with the instrument's full tag number as indicated on the Drawings:
   4. Provide all front of panel instruments with a nameplate:
      a. Engraving to include the following:
         1) Instrument's full tag number.
         2) Service description.
      b. Nameplates:
         1) Secure nameplates to the panel with stainless steel screws.
         2) Use an accepted adhesive if screws would violate the NEMA or other ratings of the enclosure.

G. Cable and conductor termination:
   1. Terminate all cables and conductors on terminal blocks.
   2. Terminal block enclosures:
      a. Suitable for the area classification as specified in the Common Work Results for Electrical Section.

H. Surge protection:
   1. Provide outdoor field instrument loops with voltage surge protection units installed on the instruments and the panel.
   2. Individually fuse each 4 to 20 milliamperes direct current loop with a 1/2-ampere fuse between power supplies and receiver surge protectors.
   3. Provide voltage surge protection for 4 wire transmitters and analyzers:
      a. Protect both power source and signal loop.

3.4 ERECTION, INSTALLATION, APPLICATION, CONSTRUCTION (NOT USED)

3.5 REPAIR/RESTORATION (NOT USED)

3.6 RE-INSTALLATION (NOT USED)

3.7 COMMISSIONING

A. As specified in the Commissioning Section.

B. Owner Training:
   1. Demonstration requirements are specified in the Commissioning for Instrumentation and Controls Section.

3.8 FIELD QUALITY CONTROL

A. Inspection:
   1. Allow for inspection of PCIS installation as specified.
   2. Provide any assistance necessary to support inspection activities.
   3. Engineer inspections may include, but are not limited to, the following:
      a. Inspect equipment and materials for physical damage.
      b. Inspect installation for compliance with Drawings and Specifications.
      c. Inspect installation for obstructions and adequate clearances around equipment.
      d. Inspect equipment installation for proper leveling, alignment, anchorage, and assembly.
      e. Inspect equipment nameplate data to verify compliance with design requirements.
      f. Inspect cable terminations.
      g. Inspect/witness instrument calibrations/verifications.
   4. Inspection activities conducted during construction do not satisfy inspection requirements specified in the Commissioning for Instrumentation and Controls Section.

B. Instrument Installation Inspection:
   1. Provide any assistance necessary to support inspection activities.
   2. Inspections may include, but are not limited to, the following:
      a. Inspect equipment and materials for physical damage.
      b. Inspect the installed arrangement, lay lengths, orientation, piping obstructions, etc., that could affect the instruments accuracy or repeatability.
      c. Inspect installation for compliance with Drawings and Specifications.
      d. Inspect installation for obstructions and adequate clearances around equipment.
      e. Inspect equipment installation for proper leveling, alignment, anchorage, and assembly.
      f. Inspect equipment nameplate data to verify compliance with design requirements.
      g. Inspect cable terminations.
      h. Inspect/witness instrument calibrations/verifications.
   3. Inspection activities conducted during construction do not satisfy inspection requirements specified in the Commissioning for Instrumentation and Controls Section.
   4. Field acceptance testing: (Functional Testing) is specified in the Commissioning for Instrumentation and Controls Section. Additional general requirements are specified in Commissioning Section.

C. Installation supervision:
   1. Ensure that the entire PCIS is installed in a proper and satisfactory manner. At a minimum, the ICSC shall provide the following services:

a. Installation resources:
    1) Coordinate with the Contractor regarding installation requirements of the Contract Documents.
b. Provide technical assistance to installation personnel by telephone:
    1) Furnish installation personnel with at least 1 copy of the accepted submittals, including all installation details.
c. Periodic inspections during the construction period.
d. A complete check of the completed installation to ensure that it is in conformance with the requirements of the equipment manufacturer and the Contract Documents.
e. Field verify accuracy and calibration of all instruments.

3.9 ADJUSTING

A. Control valves:
    1. Stroke all control valves, cylinders, drives and connecting linkages from the control system as well as local control devices and adjust to verify proper control action, hand switch action, limit switch settings, torque settings, remote control actions, and remote feedback of valve status and position.
    2. Check control valve actions and positioner settings with the valves in place to ensure that no changes have occurred since the bench calibration.

B. Make all revisions necessary to the control system software, as directed by the Engineer.
    1. It is understood that the Contractor knows and agrees that changes will be required in the control system software during the Source Testing, Functional Testing, Process Operational Period, Process Start-Up, and during the Project Correction Period.

3.10 CLEANING

A. Vacuum clean all control panels and enclosures before process start-up and again after final completion of the project.

B. Clean all panel surfaces.

C. Return to new condition any scratches and/or defects.

D. Wipe all instrument faces and enclosures clean.

E. Leave wiring in panels, manholes, boxes, and other locations in a neat, clean, and organized manner:
    1. Neatly coil and label all spare wiring lengths.
    2. Shorten, re-terminate, and re-label excessive spare wire and cable lengths, as determined by the Engineer.

F. As specified in other sections of the Contract Documents.

3.11 PROTECTION

A. Protect all Work from damage or degradation until date of Substantial Completion.

3.12 SCHEDULES (NOT USED)

END OF SECTION

THIS PAGE INTENTIONALLY LEFT BLANK FOR DOUBLE SIDED PRINTING

SECTION 271000

CONTROL STRATEGIES

PART 1 - GENERAL

1.1 SUMMARY

A. Section includes:
   1. Contractor-developed loop description submittal requirements.
   2. General programming requirements.
   3. Common control functions:
      a. General control and monitoring functions to be provided throughout the PCS system.
         1) These requirements apply to all systems, and supplement the specific loop descriptions in the Specific Control Strategies Section and information indicated on the Drawings.

1.2 REFERENCES

A. As specified in the Common Work Results for Process Control and Instrumentation Systems Section.

1.3 DEFINITIONS

A. As specified in the Common Work Results for Process Control and Instrumentation Systems Section.

B. Hardwired control: Control circuitry that does not utilize software to initiate functionality.

C. Hardwired interlocks: A safety or protective feature that will interrupt operation of the equipment in all operating modes with no required operator intervention.

D. Software interlocks: A safety or protective feature that will interrupt operation of the equipment when the PLC has control.

E. Slew rate: Rate of change in respect to time.

F. Clamp: Imposed upper and lower limits on setpoints to eliminate entries outside the allowable control parameters.

G. Watchdog timer: Timers imposed to test components such as discrete I/O to verify the health of the card.

1.4 SYSTEM DESCRIPTION (NOT USED)

1.5 SUBMITTALS

A. As specified in the Common Work Results for Process Control and Instrumentation Systems Section.

1.6 QUALITY ASSURANCE (NOT USED)

1.7 DELIVERY, STORAGE, AND HANDLING (NOT USED)

1.8 PROJECT OR SITE CONDITIONS (NOT USED)

1.9 SEQUENCING (NOT USED)

1.10 SCHEDULING (NOT USED)

1.11 WARRANTY

A. As specified in the Common Work Results for Process Control and Instrumentation Systems Section.

1.12 SYSTEM START-UP (NOT USED)

1.13 OWNER'S INSTRUCTIONS (NOT USED)

1.14 COMMISSIONING (NOT USED)

1.15 MAINTENANCE (NOT USED)

PART 2 PRODUCTS

2.1 MANUFACTURERS (NOT USED)

2.2 EXISTING PRODUCTS (NOT USED)

2.3 MATERIALS (NOT USED)

2.4 MANUFACTURED UNITS (NOT USED)

2.5 EQUIPMENT (NOT USED)

2.6 COMPONENTS (NOT USED)

2.7 ACCESSORIES (NOT USED)

2.8 MIXES (NOT USED)

2.9 FABRICATION (NOT USED)

2.10 FINISHES (NOT USED)

2.11 SOURCE QUALITY CONTROL (NOT USED)

PART 3 EXECUTION

3.1 EXAMINATION (NOT USED)

3.2 PREPARATION (NOT USED)

3.3 INSTALLATION (NOT USED)

3.4 ERECTION, INSTALLATION, APPLICATION, CONSTRUCTION

A. As specified in the Common Work Results for Process Control and Instrumentation Systems Section.

B. General programming requirements:
   1. Use variable names or aliases derived from tag and loop identification on the P&IDs for all process values.
      a. Submit names for Owner approval.
      b. Unless otherwise noted, utilize floating-point format for all PLC algorithms and calculations.
      c. Provide PLC logic to convert raw input values into engineering units in a floating-point format.
   2. Store all adjustable parameters in the PLC, and configure so that an operator with sufficient security access can change the parameters from the LOI or HMI. Update and display the current value at all locations, regardless of where the last change was made.
   3. Reusable PLC code blocks:
      a. Develop and use new standard user defined function blocks (UDFBs) and user defined types (UDTs) where appropriate. One instance of each standard code block shall reside in each PLC and shall be referenced in main routines and subroutines.
      b. New code blocks that the Contractor would like to use as a standard shall be submitted to Owner for review and approval.
   4. Documentation:
      a. All control logic shall be completely annotated including all rungs, instructions, and tags.
      b. Each routine shall have a title and a detailed description of the control strategy represented by the control logic. Where parameters are passed to the routine, all parameters shall be defined in the routine description.
      c. Analog tag descriptions representing process variables shall include the engineering unit range of the analog variable.
      d. Digital tag descriptions shall include the On and Off state labels.
      e. Complete, grammatically correct sentences and terminology, consistent with water treatment processes, shall be utilized in the development of rung and routine descriptions.
      f. All equations developed in the process logic shall be fully documented in the rung or routine description. A description of each constant and variable utilized in the equation shall be defined including engineering units.
   5. Program slew rates for setpoints to limit the effect of updated setpoints on the process:
      a. Provide for control setpoints and manual speed and position selections.
      b. Store new setpoints in one register, and gradually ramp the actual setpoint register at the slew rate until it reaches the new value.
      c. Provide operator access to change slew rates from the HMI.
   6. Saved setpoints:
      a. Provide an operator selection to save all setpoint values.
      b. Where possible use a DFB or AOI to provide an operator selection to restore all setpoints to the initial start-up value.
      c. Provide an operator selection to restore all setpoints to the last saved value.
   7. Store a copy of all adjustable parameters and accumulated and integrated totals in PCS:
      a. Upon re-loading of the PLC program, re-load these values to the PLC from PCS or processor memory card.
      b. PLCs provide a minimum 2 week data storage to provide for data accumulation and later communication to the Historian in the event of a network interruption.

8. Calculated values:
    a. Program calculations such that division by zero errors cannot occur.
    b. Prevent calculations from generating values that exceed the limits of the equipment or data type structures (integers) internal to the PLC.
    c. Configure counting functions (start counts and operation counts) to allow a minimum of 10,000 counts, and to roll-over to zero at an even decimal interval (1 followed by 4 or more zeros).
    d. Configure integrating functions to accurately accumulate the maximum rate from the instrument/equipment (totalizers, run time meters) for 30 years. Utilize manufacturer AOI/DFBs etc. where possible.
9. Timers:
    a. Provide programmable settling and proving timers in control sequences as required for starting and stopping of equipment to allow the process to settle down before proceeding with any additional control functions.
        1) The settling timers may be overridden by setting the timer to 0 seconds.
10. Control Panel status:
    a. Design the PLC system to function as a stand-alone unit that performs all of the control functions described in this Section completely independent from the functions of the PCS system PC-based operator interfaces:
        1) Failure of the PCS system shall not impact data acquisition, control, scaling, alarm checking, or communication functions of the PLC.
    b. Furnish a minimum of 1 screen that depicts the status of all enclosures containing PLCs, communication equipment, UPS or I/O in the control system, including but not limited to the following:
        1) PLC cabinet over-temperatures from high temperature switch.
        2) Intrusion status on all enclosures equipped with intrusion switches.
        3) AC power failure:
            a) Monitor ahead of UPS.
        4) DC power supply failure:
            a) For redundant power supplies, alarm when either power supply or the diode bridge fails.
        5) UPS failure signal.
        6) UPS Low Battery signal.
        7) Digital bus network Coupler and or Gateway failure signal.
        8) Ethernet Switch failure signal.
11. PLC system communication status:
    a. Furnish a minimum of 1 screen to display all communication errors and status within the PCS:
        1) Communication between PCS and PLCs, PLC to PLC, PLC to RIO and PLC and or PCS to VCP.
        2) 4-20 mA HART interface cards.
        3) Digital bus network status:
            a) Profibus scanners.
        4) Modbus Gateway modules.
        5) Display status of each node, and summary of failures over the past 60 minutes.
    b. Generate a communications alarm if any communication fault is detected or there is no response from a node for more than a user specified time.
    c. In the event of communications loss:
        1) Continue normal operation at each PLC.
        2) Where control parameters are received over a communications link:
            a) If a link fails where process elements use the remote value for closed-loop control, hold operating status, speed and position, of the process elements at their last state before the communication alarm, unless other I/O local to that PLC indicates shutdown or over-ride conditions:

(1) Ensure that the operator can control the process using PCI\S HAND mode at the local LOI.

b) If a link fails where process elements use the remote value to determine setpoints, continue to operate using the last value received:

(1) Provide a manual over-ride entry at the local LOI to allow an operator to enter a different value for any such remote signal.

(2) Generate an alarm whenever an over-ride value is in use.

12. 4-20 mA Hart interface cards:

a. Provide the following HART protocol information for each populated channel on the card:

1) Process variable values:

a) Primary process variable (analog): 4-20 mA current signal.

b) Primary process variable (digital): Digital value in engineering units.

c) Percent range: Primary process variable expressed as percent of calibrated range.

d) Loop current: Loop current value in milliamps.

e) Secondary process Variable 1: Digital value in engineering units available from multivariable devices (if applicable).

2) Host commands:

a) Set primary variable units.

b) Set upper range.

c) Set lower range.

d) Set damping value.

e) Set message.

f) Set tag.

g) Set date.

h) Set descriptor.

i) Perform loop test: Force loop current to specific value.

j) Initiate self-test: Start device self-test.

k) Get more status available information.

3) Status and diagnostic alerts:

a) Device malfunction: Indicated device self-diagnostic has detected a problem in device operation.

b) Configuration changed: Indicates device configuration has been changed.

c) Cold start: Indicates device has gone through power cycle.

d) More status available: Indicates additional devices status data available.

e) Primary variable analog output fixed: Indicates device in fixed current mode.

f) Primary variable analog output saturated: Indicates 4-20 mA signal is saturated.

g) Secondary variable out of limits: Indicates secondary variable value outside the sensor limits.

h) Primary variable out of limits: Indicates primary variable value outside the sensor limits.

4) Device identification:

a) Instrument tag: User defined, up to 8 characters.

b) Descriptor: User defined, up to 16 characters.

c) Manufacturer name (code): Code established by HCF and set by manufacturer.

d) Device type and revision: Set by manufacturer.

e) Device serial number: Set by manufacturer.

f) Sensor serial number: Set by manufacturer.

5) Calibration information:

a) Date: Date of last calibration, set by user.

b) Upper range value: Primary variable value in engineering units for 20 mA point, set by user.
c) Lower range value: Primary variable value in engineering units for 4 mA point, set by user.
d) Upper sensor limit: Set by manufacturer.
e) Lower sensor limit: Set by manufacturer.
f) Sensor minimum span: Set by manufacturer.
g) PV damping: Primary process variable damping factor, set by user.
h) Message: Scratch pad message area (32 characters), set by user.
i) Loop current transfer function: Relationship between primary variable digital value and 4-20 mA current signal.
j) Loop current alarm action: Loop current action on device failure (upscale/downscale).
k) Write protect status: Device write-protect indicator.

C. Common control functions:
1. Incorporate common control functions into all control loops and devices and into the control programming, whether or not specifically shown in the specific control descriptions or elsewhere in the Contract Documents.
2. Alarms:
a. Generate alarms within the PLC logic.
b. Indicate alarms at the LOI and HMI. Enable acknowledgement from either the HMI or the LOI.
c. Generate high, high-high, low, and low-low level alarms where indicated:
1) Provide an alarm reset deadband for each analog value to prevent excessive repeated alarms.
2) Provide logic and timers to inhibit analog alarms based on process events. For example, inhibit low flow alarms when a pump is stopped, or has not been running long enough to establish flow.
d. Flash all alarm and fail conditions and their respective indicators on the PCS graphic screens and local indicating lights until the condition is acknowledged by the operator, even if the alarm condition is no longer present.
e. Once the alarm is acknowledged by an operator, display alarm conditions in a steady state (not flashing) while the alarm condition is still present:
1) Flash with a cycle rate of 1/2 second on and 1/2 second off.
f. Once the alarm has been cleared and the operator has acknowledged the alarm or fail condition, turn the graphic alarm indicator off.
g. For all alarms that do not have inherent timers, provide an operator-adjustable proving timer to limit nuisance alarms, continuously adjustable from zero seconds to 100 minutes. The initial setting of proving timers shall be zero seconds:
1) The PLC shall start the timer when it first detects an alarm condition, and shall only activate the alarm after the timer has expired.
2) If the alarm condition clears while the timer is running, the timer shall reset, and the alarm shall not be activated.
h. Use interlocks and proving timers to prevent alarms from operating due to power loss, except for loss of power alarms.
i. Furnish an alarm silence pushbutton at each PCM, LOI, or LCP with an audible alarm to signal the PLC to turn off the audible alarm until the next alarm occurs.
j. Lamp test: Furnish lamp test pushbuttons at each control panel with more than 10 pilot lights, that illuminates all pilot lights on the panel:
1) The lamp test may sequence through blocks of lights.
2) Minimum on time for each lamp during lamp test 15 seconds.
k. Horns and Beacons:
1) Activate PCM horn and beacon on all critical alarms and on other alarms as defined by the Facility Alarm Philosophy.
2) Deactivate PCM horn and beacon when PCM reset pushbutton is activated.

3) Silence PCM horn when PCM silence pushbutton is activated.

l. Dual analog instruments:
1) For applications where 2 or more analog instruments are measuring the same process variable:
a) Generate an operator adjustable percent deviation alarm.
b) Allow operator to take each instrument out of service when an instrument is out of service.

3. Where a reset is shown for counts, totals and times maintained in the PLC:
a. Provide a reset selection on the HMI screen that displays the value.
b. Provide a preset function on the HMI to allow an operator-entered value to become the current accumulated total.
c. Limit access to the reset and preset functions to operators with suitable security level.
d. Log the value before reset, operator, time, and date of reset in the PCS archive.
e. Log the value before preset, preset value, operator, time, and date of preset in the PCS archive.

4. Where start counts are indicated on the Drawings, or required in this Section, count starts for each piece of equipment (off to on transitions of running status) in the PLC:
a. Display total starts on PCS screens, and provide a reset function.
b. Where indicated, calculate number of starts for each day:
1) Display current day and previous day starts on PCS displays.
2) Do not reset daily start count when overall count is reset.
3) Archive starts for each day through PCS.

5. Where run time accumulation is indicated on the Drawings, or required in this Section, integrate accumulated run time to the nearest 0.1 hour whenever the running status input indicates that the equipment is running:
a. Display total run time in hours on PCS screens.
b. Where indicated, calculate total run time for each day:
1) Display current day and previous day run time on the HMI to the nearest 0.1 hour.
2) Do not reset daily run time when overall time is reset.
3) Archive run time for each day through PCS.

6. For all monitored analog values:
a. Convert all values to engineering units in floating-point format within the PLC.
b. Flows and Weights:
1) Totalize flows in the PLC logic:
2) Where totalized flows are input to a discrete input, count input pulses and multiply by the volume per pulse.
3) Where no totalizer input is shown, integrate the analog input over time.
4) Display totals on the HMI and LOI.
5) Archive totals to the historical database through PCS.
c. Generate an alarm whenever an over-ride value is in use.
d. Calculate hourly, daily, and monthly averages:
1) Calculations shall be performed by the PLC.
2) Display averages on the HMI, and archive through PCS.
e. Calculate minimum and maximum values each day, and month:
1) Calculations may be performed by the PLC or PCS.
2) Display minima and maxima on the HMI, and archive through PCS.
f. Generate an alarm whenever an over-ride value is in use.

7. Analog data processing:
a. Engineering units conversion:
1) Use engineering units for all analog point values. Convert analog inputs to engineering units.
b. Analog magnitude checking:
1) Provide upper and lower limits to prevent operator-entered values (setpoints, etc.) from falling outside acceptable limits.

8. Tank and vessel levels:
    a. Display all tank and vessel levels as both a level (typically in feet) and a volume (typically in gallons):
        1) Some individual displays may be only level or volume, when agreed to by the Owner and Engineer during screen meetings.
    b. Monitor rate of change of volume on all tanks and vessels:
        1) Establish the maximum withdraw rate at which the volume should decrease (all pumps or feeders operating at maximum output). Generate an alarm whenever the volume decreases faster than this rate.
        2) Establish the minimum fill rate at which the volume should increase when filling. Generate an alarm whenever the volume increases faster than this rate. Verify tank and vessel level is fluctuating to verify the validity of the IO register. If it is determined the register is not active or failed in a manner that leaves a stagnant value generate an alarm.
9. I/O filtering and processing:
    a. Analog input filtering:
        1) For each analog input provide an adjustable first order filter, for the purpose of smoothing out spikes and other noise for analog transmitter input signals. By default, configure analog inputs with no filtering affect.
        2) Monitor analog input signal quality:
            a) Over range: The input value is above the normal range (typically over 21 mA).
            b) Under range: The input value is below the normal range (typically under 3 mA, indicating a probable broken connection).
            c) Generate alarms for over or under range inputs.
            d) Do not use over or under range values for control or calculation purposes:
                (1) Where a second instrument is provided to monitor the same condition (a redundant instrument, or additional instruments furnished for averaging or different operating modes), and has a valid signal, use that input for control.
        3) Digital input filtering (proving timer):
            a) Provide an adjustable time delay function (0-10 seconds) on discrete input for the purpose of de-bouncing.
            b) By default, discrete inputs shall be configured with de-bounce timers set to zero seconds.
10. Instrument scaling (HMI/LOI):
    a. Provide 1 or more maintenance screens to display ranges and trigger points for all field instruments:
        1) For analog instruments, use input scaling values in the PLC to determine minimum and maximum calibration points.
11. PCS HAND-OFF-AUTO:
    a. Where indicated, provide HAND-OFF-AUTO and START-STOP selections in the PCS, accessed from an LOI or HMI for operators with sufficient security, to provide the following operating modes:
        1) PCS AUTO: The normal, automatic control mode of the strategy which allows full PLC control in response to process conditions and programmed sequences.
        2) PCS HAND: Enables PCS Manual control where control decisions are made by an operator through the PCS START-STOP, OPEN/CLOSE, or other selections as indicated.
        3) PCS OFF: Automated PCS control is disabled and PLC calls for all associated equipment to stop and valves to close or go to their identified safe state.

4) Program the PLC so that switching a strategy between AUTO and HAND (either direction) occurs with a smooth transition. Keep running or position status unchanged when control is switched to HAND until a change is requested using the operator selections (START, STOP, OPEN, CLOSE). Keep running and position status unchanged when control is switched to AUTO until the control logic determines a change is required.

12. Interlocks:
    a. Implement software interlocks where indicated to place equipment in a safe condition in response to impending hazardous process conditions. Apply software interlocks when equipment is operating in PCS AUTO or PCS HAND:
13. Permissives:
    a. Implement software permissives where indicated to prevent equipment from starting in an unsafe condition.
    b. Apply software permissives when equipment is operating in PCS AUTO or PCS HAND.
14. Process control algorithms:
    a. Jog and hold: Unless otherwise indicated, use jog and hold control algorithms where possible:
        1) When the error between process variable and setpoint is beyond a setpoint deadband:
            a) Jog valve or ramp speed in the required direction for a preset “Jog Time” or until the process variable reaches or passes the setpoint.
            b) Then hold speed or position through a setpoint “Hold Time.”
            c) Continue alternating jog and hold until the error is less than the deadband.
        2) Provide operator access to Jog Time and Hold Time setpoints from the HMI.
    b. PID algorithms: Use where indicated, or where necessary to provide fast response:
        1) Provide a PID faceplate with the following displays and functions for each PID control algorithm:
            a) Display Output, CV.
            b) Display Setpoint, SP.
            c) Display Process Variable, PV.
            d) Allow for operator selection of Automatic or Manual control of the output.
            e) Under Manual control of output allow the operator to enter the desired output value.
            f) Allow for input of the 3 Proportional, Integral, and Derivative tuning parameters.
            g) Configure PID loops to prevent reset windup when controlled equipment is operating in Manual (local or PCS), or when the equipment has reached a physical limit.
            h) When controlled equipment is being operated in remote PCS HAND, configure the PID function to track the process variable to provide a smooth transfer between Manual and Automatic modes.
            i) Provide selectable slew rates with adjustable setpoints to allow the PID algorithm to slowly ramp to its final value to minimize system disturbance.
15. Equipment alternating and sequencing:
    a. Distribute number of starts and run time equally between identical equipment.
16. Motor control:
    a. Monitor the device’s LOCAL-OFF-REMOTE (LOR) switch (the hard-wired switch at the MCC, drive or equipment) to determine when the PLC has control of the associated equipment:
        1) Display current REMOTE status on the PCS screens.
    b. Monitor the device’s running status from the starter auxiliary or run status input:

1) Display the current status (running or stopped) on the PCS screens.
2) Use status to calculate total run time and daily run time, and to count total starts and daily starts.
3) Provide time stamp for each start.
4) For motors 200 HP and greater, provide software to prevent exceeding the manufacturer's recommended maximum starts per hour.

c. When equipment control has been given to the PLC as reported by the LOCAL-OFF-REMOTE switch, allow selection of PCS AUTO or PCS HAND control modes based upon operator selection using the PCS screens.

d. Starting, stopping and running when the device LOR is in LOCAL:
1) With the LOR switch in the LOCAL position, the motor is controlled by the START and STOP pushbuttons.
2) With the LOR switch in the OFF position, the motor is prohibited from running.
3) With the LOR switch in the REMOTE position, the motor is controlled remotely.

e. Starting, stopping and running when the device LOR is in REMOTE:
1) When the motor is expected to be running (PLC has issued a START or RUN due to process conditions or operator selection), LOR is in REMOTE, and the device is not reported to be running, start an operator adjustable "Control Activation" timer:
a) Provide "Control Activation" timers for each piece of controlled equipment:
(1) If the LOR and required running status do not change, and the PLC does not receive running status within the "Control Activation" time period:
(a) De-activate the output.
(b) Place the device in a "Failed" state.
(c) Generate a "Failed to Respond" alarm.
2) When the motor is not expected to be running (PLC has issued a STOP or removed the RUN output), LOR is in REMOTE, and the device is reported to be running, start the "Control Activation" timer:
a) If the LOR and required stopped status do not change, and the PLC does not lose the running status within the "Control Activation" time period:
(1) Keep the RUN output off or the STOP output on.
(2) Place the device in a "Failed" state.
(3) Generate a "Failed to Respond" alarm.
3) Re-establish PLC control of a device in a "Failed" state only after the following:
a) An operator turns the device's LOR switch out of REMOTE, and back to REMOTE (i.e., REMOTE input to the PLC cycles off and back on).

f. Where motor winding high temperature switches or RTD temperature elements are shown, generate an alarm when high temperature is sensed (contact opens or temperature above the high alarm setpoint), but do not stop the motor unless otherwise indicated.

g. Motor equipped with current detection shall shut down and report a "failed" status on detection of high current.

h. Control two-speed motors similar to other motors, except as listed below:
1) Motor states are RUN-FAST, RUN-SLOW, and STOP.
2) Start all two-speed motors in the RUN-SLOW state. If or when the high speed is required (RUN-FAST operator selection or process conditions), transition to RUN-FAST after a designated time.

3) When transitioning from RUN-FAST to RUN-SLOW, remove the RUN-FAST output or issue a STOP, then wait for a “Fast to Slow” time delay before energizing the RUN-SLOW or START-SLOW output.

i. Speed control:

1) Modulate speed on VFD-driven motors using jog and hold, or PID control algorithms to maintain process conditions as described in the specific loop descriptions.

2) Operate speed control within a pre-defined range:

a) Minimum speed as determined by equipment manufacturer. The higher of:

(1) Minimum motor speed to maintain adequate cooling for the type of load driven (constant or variable torque).

(2) Minimum equipment speed, such as minimum speed to deliver flow or to deliver minimum flow for equipment cooling or lubrication.

b) Maximum speed 100 percent (60 hertz) or as identified by equipment manufacturer.

3) Where multiple equipment may operate together to maintain the same process condition:

a) Provide an operator selection for starting sequence.

b) Start the first equipment at a preset starting speed.

c) When one or more equipment is running and the speed control algorithm reaches a preset “Start Next” speed value (initially 95 percent of speed range) through a preset time delay:

(1) Start the next available equipment at the preset starting speed.

(2) Ramp up the started equipment and ramp down the previously running equipment to the mid operating speed (adjustable in the PLC). Determine preset values for each condition based on equipment and system characteristics to provide approximately the same total flow or process condition with the new load running at the mid speed (for example if one pump is running and the second pump will be added, then the total flow of both pumps running at mid operating speed should be approximately the same as flow of one pump at Start Next speed).

(3) Once both equipment reach the mid operating speed, resume the speed control algorithm for those equipment.

(4) Operate all equipment at the same speed following the output of the speed control algorithm.

d) When two or more pieces of equipment are running, monitor for a “Stop Next” condition:

(1) Where flow rate is monitored, use a preset “Stop Next” flow rate for each possible number and combination of equipment:

(a) Determine initial “Stop Next” speed based on the flow that can be provided with one fewer piece of equipment running at a speed slightly below the “Start Next” speed.

(2) When the “Stop Next” condition exists through a preset time delay:

(a) Ramp speed of running equipment except for the equipment to be stopped up to a preset value based on the number of items running. Determine preset values for each condition based on equipment and system characteristics to provide approximately the same total flow or process condition with one fewer load running (typically slightly below the preset “Start Next” speed) while ramping speed of equipment to be stopped down to the preset minimum speed.

(b) Operate all remaining equipment at the same speed following the output of the speed control algorithm. Stop the load once it reaches minimum speed.

17. Gate and valve control:
    a. Monitor the device's LOCAL-STOP-REMOTE (LSR) switch(es) (the integral switch in the actuator or hard-wired switch at the local control station):
        1) Display current REMOTE status on PCS screens.
    b. Start an "Open Activation" timer whenever the device is expected to be open (PLC has issued an OPEN command in PCS AUTO, or OPEN was selected in PCS HAND):
        1) Initially set "Open Activation" time to twice the normal opening time.
        2) If the LSR position and open command do not change, and the PLC does not receive fully open status feedback within the "Open Activation" time period:
            a) De-activate the open output.
            b) Place the device in a "Failed" state.
            c) Generate a "Failed to Open" alarm.
    c. Start a "Close Activation" timer whenever the device is expected to be closed (PLC has issued a CLOSE command in PCS AUTO, or CLOSE was selected in PCS HAND):
        1) Initially set "Close Activation" time to twice the normal closing time.
        2) If the LSR position and close command do not change, and the PLC does not receive fully closed status feedback within the "Close Activation" time period:
            a) De-activate the close output.
            b) Place the device in a "Failed" state.
            c) Generate a "Failed to Close" alarm.
    d. Limit the number of open/close /commands so that it does not exceed the manufacturer requirements.
    e. For modulating valves (valves controlled from either a 4-20 mA signal or digital communications command) with position feedback, start a "Position Error" timer whenever the position feedback differs from the required position command by more than a setpoint error when the LSR is in REMOTE:
        1) For analog modulating devices, error is determined by position feedback differing from position command by more than the setpoint error.
        2) For discrete modulating devices, error is determined by feedback not changing in the correct direction, or changing at less than a setpoint rate, when the OPEN or CLOSE PLC output is active.
        3) Initially set the "Position Error" time to 60 seconds.
        4) If the LSR position does not change, and position error stays outside of the setpoint error through the "Position Error" time period:
            a) Place the device in a "Failed" state.
            b) Generate a "Position Fail" alarm.
    f. Provide separate time delay settings for each function and for each device.
    g. If the valve position inputs indicate an invalid state (i.e., valve open and closed at the same time), place the device in a "Failed" state and generate an "Invalid State" alarm.
    h. Re-establish PLC control of a device in a "Failed" state only after one of the following:
        1) An operator turns the device's LSR switch out of REMOTE and back to REMOTE (i.e., REMOTE input to the PLC cycles off and back on).
    i. For all alarm conditions, control other devices (as stopping pumps, etc.) as stated in the individual loop descriptions to make the system safe.
    j. For discrete modulating valves (valves positioned to intermediate positions to control process values through discrete OPEN and CLOSE outputs), count the number of actuations (OPEN or CLOSE commands) per hour in the PLC:

1) Display count on the HMI.

3.5 REPAIR/RESTORATION (NOT USED)

3.6 RE-INSTALLATION (NOT USED)

3.7 FIELD QUALITY CONTROL (NOT USED)

3.8 ADJUSTING (NOT USED)

3.9 CLEANING (NOT USED)

3.10 DEMONSTRATION AND TRAINING

A. As specified in the Common Work Results for Process Control and Instrumentation Systems Section.

3.11 PROTECTION (NOT USED)

3.12 SCHEDULES (NOT USED)

END OF SECTION

THIS PAGE INTENTIONALLY LEFT BLANK FOR DOUBLE SIDED PRINTING

SECTION 272060

LEVEL MEASUREMENT: ULTRASONIC

PART 1 GENERAL

1.1 SUMMARY

A. Section includes:
   1. Ultrasonic level instruments.

B. Provide all instruments identified in the Contract Documents.

1.2 REFERENCES

A. As specified in the Common Work Results for Process Control and Instrumentation Systems Section.

1.3 DEFINITIONS

A. As specified in the Common Work Results for Process Control and Instrumentation Systems Section.

B. Specific definitions:
   1. FDT: Field Device Tool.
   2. DTM: Device Type Manager.

1.4 SUBMITTALS

A. Furnish submittals as specified in the Common Work Results for Process Control and Instrumentation Systems Section.

B. Provide complete documentation covering the traceability of all calibration instruments.

1.5 QUALITY ASSURANCE

A. As specified in the Common Work Results for Process Control and Instrumentation Systems Section.

B. Examine the complete set of Contract Documents and verify that the instruments are compatible with the installed conditions including:
   1. Process conditions: Fluids, pressures, temperatures, flows, materials, etc.
   2. Physical conditions:
      a. Installation and mounting requirements.
      b. Location within the process.
      c. Accessories: Verify that all required accessories are provided and are compatible with the process conditions and physical installation.

C. Notify the Engineer if any installation condition does not meet the instrument manufacturer’s recommendations or specifications.

D. Manufacture instruments facilities certified to the quality standards of ISO Standard 9001 - Quality Systems - Model for Quality Assurance in Design/Development, Production, Installation, and Servicing.

1.6 DELIVERY, STORAGE, AND HANDLING

A. As specified in the Common Work Results for Process Control and Instrumentation Systems Section.

1.7 PROJECT OR SITE CONDITIONS

A. Project environmental conditions as specified in the Common Work Results for Process Control and Instrumentation Systems Section.

1. Provide instruments suitable for the installed site conditions including, but not limited to, material compatibility, site altitude, site seismic conditions, humidity, and process and ambient temperatures.

1.8 WARRANTY

A. As specified in the Common Work Results for Process Control and Instrumentation Systems Section.

1.9 MAINTENANCE

A. Furnish all parts, materials, fluids, etc. necessary for operation, maintenance, and calibration purposes throughout the warranty period. Deliver all of these supplies before project substantial completion.

PART 2 PRODUCTS

2.1 MANUFACTURERS

A. One of the following or equal:
1. Ultrasonic level sensor with 4-wire remote transmitter:
a. Endress+Hauser, Prosonic S FDU Series Sensor with FMU Series Transmitter.
b. Siemens, Echomax Series sensor with HydroRanger 200 Series Transmitter.
c. Pulsar, dB Series Sensor with Ultra 3 transmitter.
2. Ultrasonic level sensor with 2-wire integral transmitter:
a. Siemens, SITRANS Probe.
b. Endress+Hauser, Prosonic M FMU Series.
c. Pulsar Intelligent Transducers.
d. Pulsar devices.

2.2 MANUFACTURED UNITS

A. Ultrasonic level measurement with 4-wire remote transmitter:
1. General:
a. Continuous non-contact level measurement device with remote transmitter using ultrasonic echo sensing. The transducer generates an ultrasonic pulse in the range of 12 to 50 kHz and measures the time required for the pulse to travel to the process surface and return. The distance is calculated from the send and receive times. Each 4-wire level transmitter system includes, but is not limited to:
1) Ultrasonic transducer.
2) Signal cable.
3) Transmitter.

2. Performance requirements:
    a. Accuracy:
        1) 0.25 percent of range.
    b. Repeatability:
        1) 0.1 percent of range.
3. Ultrasonic transducer:
    a. Encapsulated in chemical- and corrosion-resistant material as indicated on the Instrument Data Sheet or Instrument Index.
    b. Class I Division 1 for transducer only.
    c. Operating temperature range: -5 to 122 degrees Fahrenheit (-20 to 50 degrees Celsius).
    d. Operating relative humidity range: 5 to 95 percent.
    e. Functions:
        1) Temperature compensation.
    f. Mounting: As indicated in the Contract Documents.
    g. Sensors shall be rated for NEMA 6P submergence. Sensors shall have mechanical decoupling between sensor membrane and outer housing. Sensors shall be provided with automatic build up compensation to provide self-cleaning when condensation may occur. Sensors shall be provided with internal heating elements and separate power supplies for these elements when freezing condensation may occur.
4. Transmitter:
    a. Level-indicating transmitter:
        1) Indicator: Liquid crystal display with approximately 0.50-inch display scaled to read in engineering units.
        2) Sensitivity: Able to ignore momentary level spikes or momentary loss of echo and indicate loss of echo condition on indicating transmitter unit.
        3) Ability to allow for signal profiles and echo mapping:
            a) Provide manufacturer's software for re-mapping the signal.
    b. Functions:
        1) Level measurement.
        2) Tank volume.
        3) Flow measurement.
    c. Power supply:
        1) 120 VAC.
        2) Power consumption: 36 VA maximum.
    d. Outputs:
        1) Isolated 4 to 20 milliamperes DC
        2) Relay outputs:
            a) Minimum 6 Form A or Form C contacts.
            b) Rated 5 amps at 250 VAC.
            c) Programmable.
        3) Enclosure: NEMA Type 4X.
        4) Mounting: As indicated in the Contract Documents.
        5) Operating temperature range from -5 to 122 degrees Fahrenheit (-20 to 50 degrees Celsius); relative humidity of 10 to 100 percent.
        6) Power supply shall be 90-253 VAC, or 10.5-32 VDC.
        7) The transmitter shall have automatic volume calculation for horizontal or vertical tanks with 32 point linearization; pre-programmed linearization tables for flumes and weirs; back water detection for submerged flow conditions; sludge detection; synchronization of pulses between two ultrasonic units used in same tank; automatic sensor detection; alternating pump control; rake/screen control.
        8) There shall be at least 3 integral totalizers and 3 daily counters with the ability for simultaneous measurement of level and flow in storm water

overflow basin with only 1 sensor; EE prom memory backup; temperature compensation; average, difference and sum calculations.

B. Ultrasonic level measurement with 2-wire integral transmitter:
   1. General:
      a. Continuous non-contact level measurement device with integral transmitter using ultrasonic echo sensing.
      b. The transducer generates an ultrasonic pulse in the range of 12 to 70 kHz and measures the time required for the pulse to travel to the process surface and return. The level is measured based on constant velocity of sound in air with temperature compensation to adjust for velocity changes relative to temperature.
      c. Each 2- or 3-wire level transmitter system includes, but is not limited to:
         1) Ultrasonic transducer with integral transmitter.
   2. Performance requirements:
      a. Accuracy:
         1) 0.25 percent of range.
      b. Repeatability:
         1) 0.2 percent of range.
   3. Transducer (Integral):
      a. Encapsulated in chemical- and corrosion-resistant material as indicated on the Instrument Data Sheet or Instrument Index.
      b. Operating temperature range: -5 to 122 degrees Fahrenheit (-20 to 50 degrees Celsius).
      c. Operating relative humidity range: 5 to 95 percent.
   4. Transmitter:
      a. Functions:
         1) Single-level measurement.
         2) Programmable for:
            a) Level.
            b) Tank volume.
      b. Power supply:
         1) 24 VDC, 2-wire loop powered.
         2) Power consumption: 6 VA maximum.
      c. Outputs:
         1) Isolated 4 to 20 milliamperes
      d. Indicator: Liquid crystal display with approximately 0.50-inch display scaled to read in engineering units.
      e. Sensitivity: Able to ignore momentary level spikes or momentary loss of echo and indicate loss of echo condition on indicating transmitter unit.
      f. Enclosure:
         1) NEMA Type 4X.
      g. Mounting: As indicated in the Contract Documents.

2.3 ACCESSORIES

A. Mounting brackets: As indicated on the Drawings.

B. Provide sunshades for outdoor installations.

2.4 SOURCE QUALITY CONTROL

A. As specified in the Common Work Results for Process Control and Instrumentation Systems Section.

B. Factory calibrate each instrument with a minimum 3-point calibration or according to manufacturer’s standard at a facility that is traceable to NIST.

1. Submit calibration data sheets to the Engineer at least 30 days before shipment of the instruments to the project site.

PART 3 EXECUTION

3.1 EXAMINATION

A. Examine the installation location for the instrument and verify that the instrument will work properly when installed.
   1. Notify the Engineer promptly if any installation condition does not meet the instrument manufacturer's recommendations or specifications.

3.2 PREPARATION (NOT USED)

3.3 INSTALLATION

A. As specified in the Common Work Results for Process Control and Instrumentation Systems Section.

B. Coordinate the installation with all trades to ensure that the mechanical system has all necessary appurtenances including weld-o-lets, valves, etc. for proper installation of instruments.

3.4 FIELD QUALITY CONTROL

A. As specified in the Common Work Results for Process Control and Instrumentation Systems Section.

3.5 ADJUSTING

A. As specified in the Commissioning for Instrumentation and Controls Section.

B. Turn on turbulent surface software feature for all installations measuring surfaces lacking a placid surface. This would include but not be limited to level measurements in mixed media filters and potentially wet wells.

3.6 CLEANING

A. As specified in the Common Work Results for Process Control and Instrumentation Systems Section.

3.7 DEMONSTRATION AND TRAINING

A. As specified in the Common Work Results for Process Control and Instrumentation Systems Section.

3.8 PROTECTION

A. As specified in the Common Work Results for Process Control and Instrumentation Systems Section.

3.9 SCHEDULES

A. The provided information does not necessarily include all required instruments. Provide all instruments identified in the Contract Documents:
   1. Instruments may be as indicated on the Drawings, specified in the Specifications, or both.

END OF SECTION

SECTION 273020

FLOW MEASUREMENT: MAGNETIC FLOWMETERS

PART 1 GENERAL

1.1 SUMMARY

A. Section includes:
   1. Full-body magnetic flowmeters.

B. Spare Parts:
   1. **PROVIDE SPOOL LENGTHS EQUIVALENTS FOR ALL MAG METERS WHERE NO BYPASS EXISTS. SPOOLS TO BE LABELED WITH TAGS FOR IDENTIFICATION.**

C. Provide all instruments identified in the Contract Drawings.

1.2 REFERENCES

A. As specified in the Common Work Results for Process Control and Instrumentation Systems Section.

B. International Organization for Standardization (ISO):
   1. 9000 - Quality management systems -- Fundamentals and vocabulary.
   2. 17025 - General requirements for the competence of testing and calibration laboratories.

C. National Institute of Standards and Technology (NIST).

D. NSF International (NSF).

1.3 DEFINITIONS

A. As specified in the Common Work Results for Process Control and Instrumentation Systems Section.

1.4 SUBMITTALS

A. Furnish submittals as specified in the Common Work Results for Process Control and Instrumentation Systems Section.

B. Include sizing information from the manufacturer that includes:
   1. Chart of the measurement error from zero to maximum measured volumetric flow range indicated in data sheets.
   2. Indication of all input parameters and their values used in the calculations.

1.5 QUALITY ASSURANCE

A. As specified in the Common Work Results for Process Control and Instrumentation Systems Section.

B. Examine the complete set of Contract Documents and verify that the instruments are compatible with the installed conditions including:
   1. Process conditions: Fluids, pressures, temperatures, flows, materials, etc.
   2. Physical conditions:
      a. Installation and mounting requirements.

b. Location within the process.
c. Accessories: Verify that all required accessories are provided and are compatible with the process conditions and physical installation.

C. Notify the Engineer if any installation condition does not meet the instrument manufacturer's recommendations or specifications.

1.6 DELIVERY, STORAGE, AND HANDLING

A. As specified in the Common Work Results for Process Control and Instrumentation Systems Section.

1.7 PROJECT OR SITE CONDITIONS

A. As specified in the Common Work Results for Process Control and Instrumentation Systems Section.

1.8 WARRANTY

A. As specified in the Common Work Results for Process Control and Instrumentation Systems Section.

1.9 MAINTENANCE

A. As specified in the Common Work Results for Process Control and Instrumentation Systems Section.

PART 2 PRODUCTS

2.1 MANUFACTURERS

A. One of the following or equal:
1. Endress+Hauser: Promag 53.
2. Rosemount – 8700.
3. Krohne - IFC.
4. Toshiba - LF

2.2 MANUFACTURED UNITS

A. Magnetic flowmeter:
1. General:
a. Magnetic flowmeters obtain the flow velocity by measuring the changes of induced voltage of the conductive fluid passing across a controlled magnetic field.
b. Complete zero stability shall be an inherent characteristic of the flowmeter system.
c. Include for each magnetic flow metering system:
1) A metering tube with electrodes (sensor).
2) Signal cable.
3) Transmitter integral or remote as indicated on the Drawings.
4) Flowmeter grounding rings.
2. Performance requirements:
a. Accuracy:
1) 0.25 percent of flow rate from 10 to 100 percent of full-scale for velocities ranging between 1.9 to 10 feet per second.
b. Repeatability:
1) 0.25 percent of rate.
3. Element:

a. Metering tube:
    1) Constructed of carbon steel or Type 304 stainless steel (unless specifically noted otherwise) with flanged connections to match with piping material.
    2) Liner material in conformance with:
        a) Manufacturer's recommendations for the intended service.
        b) NSF certified for all drinking water applications.
    3) Electrodes type and material in conformance with:
        a) Manufacturer's recommendations for the intended service.
        b) Utilize a minimum of 2, self-cleaning electrodes.
    4) Meter terminal housing NEMA Type 4X, unless installed in locations such as vaults that will experience submergence. In those applications NEMA 6P is required.
        a) Unless specifically noted otherwise in the instrument data sheets.
    5) Meter coating consisting of epoxy painted finish.
    6) Components:
        a) 2 grounding rings:
            (1) Which are in conformance with the manufacturer's bore and material recommendation for the meter's intended service.
            (2) Designed to protect and shield from abrasion of the liner's edge interface at the meter's end.

4. Transmitter:
    a. Power supply:
        1) Power consumption: 60 VA maximum.
    b. Outputs:
        1) As noted in the instrument data sheets.
        2) For all instruments with 4 to 20 mA HART or digital bus protocol, provide a Device Type Manager (DTM) certification by FDT group.
    c. Microprocessor-based signal converter/transmitter.
    d. Utilize DC pulse technique to drive flux-producing coils.
    e. Contain a 6-digit display for flow rate, percent of span, and totalizer.
    f. Operator keypad interface.
    g. Integral zero return to provide consistent zero output signals in response to an external dry contact closure.
    h. Integral low flow cut-off zero return.
    i. Programmable parameters including:
        1) Meter size.
        2) Full-scale flow rate.
        3) Magnetic field frequency.
        4) Time constant.
    j. Data retention for a minimum of 5 years without auxiliary main or battery power.
    k. Self-diagnostics and automatic data checking.
    l. Protected terminals and fuses in a separate compartment which isolates field connection from electronics.
    m. Ambient operating temperature limits of -5 to 140 degrees Fahrenheit (-20 to 60 degrees Celsius).

2.3 ACCESSORIES

A. Provide stainless steel tags for each instrument. Tags shall be labeled as specified in the Contract Documents.

B. Provide sunshades for all transmitters located outdoors.

C. Provide galvanic isolation gaskets, nylon/Teflon™ flange bolt insulation bushings and nylon washers on all meters installed on pipes with cathodic protection.

2.4 SOURCE QUALITY CONTROL

A. As specified in the Common Work Results for Process Control and Instrumentation Systems Section.

B. Factory calibrate each flow metering system at a facility that is traceable to the NIST. ISO-17025 accredited test facility with certified accuracy traceable to NIST.

C. Evidence of accreditation shall originate from a national verification agency such as A2LA.

D. A real-time computer generated printout of the actual calibration date indication actual velocities and as read values of the flow tube.
   1. Flow calibration report of the manufacturers flow lab calibration procedure shall be shipped with the meter system.
   2. Minimum calibration shall be a 3 point calibration including 1, 3, and 10 feet per second velocities for every meter and transmitter system.
   3. Manufacturer shall archive all calibration reports for future reference.

PART 3 EXECUTION

3.1 EXAMINATION (NOT USED)

3.2 PREPARATION (NOT USED)

3.3 INSTALLATION

A. As specified in the Common Work Results for Process Control and Instrumentation Systems Section.

B. For instruments located outdoors or where instrument elements and transmitters are separated by conduit located outside the building envelope, provide surge protection devices at the transmitters.

3.4 FIELD QUALITY CONTROL

A. As specified in the Common Work Results for Process Control and Instrumentation Systems Section.

B. Provide manufacturer’s services to perform installation inspection.

3.5 ADJUSTING

A. Field Verification:
   1. Verify factory calibration of all instruments in accordance with the manufacturer’s instructions.
   2. The transmitter and sensor to include a method to verify flow meter performance to the original manufacturer specifications.
   3. Verification should be traceable to factory calibration using a third party, attested onboard system pursuant to ISO standards.
   4. The verification report should be compliant to common quality systems such as ISO 9000 to prove reliability of the meter specified accuracy.
   5. Return factory calibrated devices to the factory if they do not meet the field verification requirements for calibration.

3.6 CLEANING

A. As specified in the Common Work Results for Process Control and Instrumentation Systems Section.

3.7 DEMONSTRATION AND TRAINING

A. As specified in the Common Work Results for Process Control and Instrumentation Systems Section.

B. Demonstrate performance of all instruments to the Engineer before commissioning.

3.8 PROTECTION

A. As specified in the Common Work Results for Process Control and Instrumentation Systems Section.

3.9 SCHEDULES

A. Provide all instruments identified in the Contract Documents:
   1. Instruments may be indicated on the Drawings, specified in the Specifications, or both.
   2. Contractor shall coordinate the selection of the material, ranges, span, and accessories and options with the process being measured to ensure a complete and operating system.

END OF SECTION

THIS PAGE INTENTIONALLY LEFT BLANK FOR DOUBLE SIDED PRINTING

SECTION 273400

INSTRUMENTATION AND CONTROLS – ANALYTICAL DEVICE

PART 1 GENERAL

1.1 SCOPE OF WORK

A. This section covers the furnishing, installation, and services for the field-mounted analyzers as detailed on the Drawings.

1.2 MAINTENANCE

B. Accessories

1. All mounting hardware required for pipe stand, surface, or other mounting shall be provided.

2. Each instrument shall be provided with a manufacturer installed stainless steel tag identifying the instrument tag number.

PART 2 PRODUCTS

2.1 DISSOLVED OXYGEN ANALYZER (LUMINESCENT-TYPE SENSOR) / TSS

A. Electrode Cartridge/Sensor Assembly

1. Type: Continuous monitoring of dissolved oxygen using a luminescent membrane excited with blue light pulses.

2. Function/Performance:

a. Accuracy: plus or minus 0.1 ppm (DO<1 ppm); plus or minus 0.2 ppm.

b. Repeatability: 0.005 ppm.

c. Measuring Range: 0 to 20 ppm.

d. Sensitivity: plus or minus 0.05 percent of span.

e. Measuring Range: 0 to 50 degrees C.

f. Materials on Construction: Probe, noryl and 316SS; sensor, polybutyl methacrolate.

g. Warranties: Probe, 3 years; Sensor, 1 year.

3. Accessories Required:

a. One spare sensor cap for each set of ten or less sensor assemblies provided.

b. Sufficient cable for installation between the sensor and analyzer/controller as indicated on the Drawings.

c. One mounting bracket per sensor for fixing the sensor assembly to hand railing or other fixed support.

2. Manufacturer(s):

a. Hach LDO / SOLITAX sensor assembly.

b. YSI

c. Equal.

B. Analyzer/Controller

1. Type: Microprocessor-based controller compatible with sensor furnished.

2. Function/Performance:

a. Accuracy: plus or minus 0.1 percent of span.

b. Repeatability: plus or minus 0.05 percent of span.

c. Response Time: 60 seconds to 90 percent of value on step change.

d. Temperature Range: -40 to 60 degrees C.

e. Output: Two 4-20 mA outputs and three programmable Form C alarm contact outputs rated for 5A at 230 VAC.

f. Temperature Compensation: Compensation over the temperature range of the instrument.

g. Diagnostics: On screen instructions and display of self diagnostics.

h. Display: Digital indicator displaying concentration in ppm and temperature of the medium.

3. Physical:

a. Converter shall be suitable for surface or pipe stand mounting.

b. Enclosure shall be NEMA 4X (IP67).

c. Power requirements: 120 VAC/60 Hz.

4. Manufacturer(s):

a. Hach sc200 Controller.

b. YSI

c. Equal.

PART 3 EXECUTION

END OF SECTION

THIS PAGE INTENTIONALLY LEFT BLANK FOR DOUBLE SIDED PRINTING

SECTION 274070

PRESSURE MEASUREMENT: SUBMERSIBLE

PART 1 GENERAL

1.1 SUMMARY

A. Section includes:
   1. Submersible pressure transmitters.

B. Provide all instruments identified in the Contract Documents.

1.2 REFERENCES

A. As specified in the Common Work Results for Process Control and Instrumentation Systems Section.

1.3 DEFINITIONS

A. As specified in the Common Work Results for Process Control and Instrumentation Systems Section.

1.4 SUBMITTALS

A. Furnish submittals as specified in the Common Work Results for Process Control and Instrumentation Systems Section.

B. Provide complete documentation covering the traceability of all calibration instruments.

1.5 QUALITY ASSURANCE

A. As specified in the Common Work Results for Process Control and Instrumentation Systems Section.

B. Examine the complete set of Contract Documents and verify that the instruments are compatible with the installed conditions including:
   1. Process conditions: Fluids, pressures, temperatures, flows, materials etc.
   2. Physical conditions:
      a. Installation and mounting requirements.
      b. Location within the process.
      c. Accessories: Verify that all required accessories are provided and are compatible with the process conditions and physical installation.

C. Notify the Engineer if any installation condition does not meet the instrument manufacturer's recommendations or specifications.

D. Provide instruments manufactured at facilities certified to the quality standards of ISO 9001.

1.6 DELIVERY, STORAGE, AND HANDLING

A. As specified in the Common Work Results for Process Control and Instrumentation Systems Section.

1.7 PROJECT OR SITE CONDITIONS

A. Project environmental conditions as specified in the Common Work Results for Process Control and Instrumentation Systems Section.
   1. Provide instruments suitable for the installed site conditions including, but not limited to, material compatibility, site altitude, site seismic conditions, humidity, and process and ambient temperatures.

1.8 WARRANTY

A. As specified in the Common Work Results for Process Control and Instrumentation Systems Section.

1.9 MAINTENANCE

A. Furnish all parts, materials, fluids, etc. necessary for operation, maintenance, and calibration purposes throughout the warranty period. Deliver all of these supplies before project substantial completion.

PART 2 PRODUCTS

2.1 MANUFACTURERS

A. Submersible level measurement with 2-wire integral transmitter:
   1. One of the following or equal:
      a. Druck, PTX-1830 (clear water)/ PTX-1290 (wastewater).
      b. Or equal.

2.2 MANUFACTURED UNITS

A. Submersible level measurement with 2-wire integral transmitter:
   1. General:
      a. Pressure is measured through a diaphragm-type measuring cell and converted to linear pressure measurement.
      b. Each submersible pressure transmitter system shall include:
         1) Signal cable, including pressure compensation tube.
         2) Transducer probe with integral transmitter.
         3) Transmitter cable termination box.
   2. Performance requirements:
      a. Accuracy:
         1) 0.3 percent of range.
      b. Repeatability:
         1) 0.25 percent of full scale.
      c. Rangeability:
         1) 3:1.
   3. Element:
      a. Sensor housing shall be Type 316L stainless steel or titanium with ceramic, teflon-coated, or titanium diaphragm.
      b. Protective cap shall be manufacturer’s recommended material, chemically resistant to process fluid.
      c. Slip resistant extension cable with pressure compensation tube with Teflon filter.
      d. Enclosure for probe and transmitter assembly shall be NEMA Type 6P.
   4. Transmitter:
      a. Power supply:

1) 24 VDC: 2 wire loop powered.
2) Power consumption: 18 VA maximum.

b. Outputs:
1) Isolated 4 to 20 milliamperes DC.

c. Without display.

d. Ambient operating temperature limits of -10 to 70 degrees Celsius (-14 to 158 degrees Fahrenheit).

e. Transmitter shall be integral to probe housing.

5. Transmitter cable termination box:
a. NEMA Type 4X.
b. Equipped with filter or desiccant chamber to eliminate moisture from the pressure compensation tube.
c. Termination for signal wires and pressure compensation tube.

2.3 ACCESSORIES

A. Type 316L stainless steel mounting clamp with Type 304 stainless steel mounting screws.

B. Provide cable clamp and strain relief.

C. Provide computer cable adapter with Windows® software.

D. Provide remote display with backlight or loop indicator with backlight as indicated on the Drawings and as specified in the Control Systems: Panels, Enclosures, and Panel Components Section.

E. Provide sunshade for outdoor installations.

2.4 SOURCE QUALITY CONTROL

A. As specified in the Common Work Results for Process Control and Instrumentation Systems Section.

B. Factory calibrate each instrument with a minimum 3-point calibration or according to Manufacturer's standard at a facility that is traceable to the NIST.
1. Submit calibration data sheets to the Engineer at least 30 days before shipment of the instruments to the project site.

PART 3 EXECUTION

3.1 EXAMINATION

A. Examine the installation location for the instrument and verify that the instrument will work properly when installed.
1. Notify the Engineer promptly if any installation condition does not meet the instrument manufacturer's recommendations or specifications.

3.2 PREPARATION (NOT USED)

3.3 INSTALLATION

A. As specified in the Common Work Results for Process Control and Instrumentation Systems Section.

B. Coordinate the installation with all trades to ensure that the mechanical system has all necessary appurtenances including weld-o-lets, valves, etc. for proper installation of instruments.

3.4 FIELD QUALITY CONTROL

A. As specified in the Common Work Results for Process Control and Instrumentation Systems Section.

3.5 ADJUSTING

A. As specified in the Commissioning for Instrumentation and Controls Section.

3.6 CLEANING

A. As specified in the Common Work Results for Process Control and Instrumentation Systems Section.

3.7 DEMONSTRATION AND TRAINING

A. As specified in the Common Work Results for Process Control and Instrumentation Systems Section.

3.8 PROTECTION

A. As specified in the Common Work Results for Process Control and Instrumentation Systems Section.

3.9 SCHEDULES

A. The provided information does not necessarily include all required instruments. Provide all instruments identified in the Contract Documents:
   1. Instruments may be indicated on the Drawings, specified in the Specifications, or both.

END OF SECTION

SECTION 276040

TEMPERATURE MEASUREMENT: RTD

PART 1 GENERAL

1.1 SUMMARY

A. Section includes:
   1. RTD temperature instruments.

B. Provide all instruments identified in the Contract Documents.

1.2 REFERENCES

A. As specified in the Common Work Results for Process Control and Instrumentation Systems Section.

1.3 DEFINITIONS

A. As specified in the Common Work Results for Process Control and Instrumentation Systems Section.

B. Specific definitions:
   1. RTD - Resistance temperature detector.

1.4 SUBMITTALS

A. Furnish submittals as specified in the Common Work Results for Process Control and Instrumentation Systems Section.

B. Provide complete documentation covering the traceability of all calibration instruments.

1.5 QUALITY ASSURANCE

A. As specified in the Common Work Results for Process Control and Instrumentation Systems Section.

B. Examine the complete set of Contract Documents and verify that the instruments are compatible with the installed conditions including:
   1. Process conditions: Fluids, pressures, temperatures, flows, materials, etc.
   2. Physical conditions:
      a. Installation and mounting requirements.
      b. Location within the process.
      c. Accessories: Verify that all required accessories are provided and are compatible with the process conditions and physical installation.

C. Notify the Engineer if any installation condition does not meet the instrument manufacturer’s recommendations or specifications.

D. Provide instruments manufactured at facilities certified to the quality standards of ISO 9001.

1.6 DELIVERY, STORAGE, AND HANDLING

A. As specified in the Common Work Results for Process Control and Instrumentation Systems Section.

1.7 PROJECT OR SITE CONDITIONS

A. As specified in the Common Work Results for Process Control and Instrumentation Systems Section.

1.8 WARRANTY

A. As specified in the Common Work Results for Process Control and Instrumentation Systems Section.

1.9 MAINTENANCE

A. Furnish all parts, materials, fluids, etc. necessary for operation, maintenance, and calibration purposes throughout the warranty period. Deliver all of these supplies before project substantial completion.

PART 2 PRODUCTS

2.1 MANUFACTURERS

A. One of the following or equal:

1. Process Measurement:
    a. Emerson, Rosemount 3144P transmitter with Series 214C sensor.
    b. Siemens, SITRANS T.
    c. Foxboro, Model RTT20.

2.2 MANUFACTURED UNITS

A. Process measurement:
1. General:
    a. Temperature measuring instrument shall include an RTD temperature element, transmitter, and thermowell.
2. Performance requirements:
    a. Accuracy:
        1) Within 0.25 percent of calibrated span.
    b. Repeatability:
        1) 0.25 percent of full scale.
    c. Sensor lead wire compensation: Maximum zero shift of 0.2 percent of the temperature range.
3. Element:
    a. 100-Ohm platinum thin film resistance temperature detector (RTD).
    b. 3-wire.
    c. Hermetically-sealed, and enclosed in Type 316 stainless steel outer sheath.
    d. Single element temperature sensor shall be spring-loaded.
4. Transmitter:
    a. Microprocessor based.
    b. Compatible with 3-wire and 4-wire RTD inputs:
    c. Local display:
        1) 5-digit LCD.
        2) Scaled in engineering units.

d. Power supply:
    1) 24 VDC - loop powered.
e. Outputs:
    1) Isolated 4 to 20 milliamperes DC with HART communication protocol.
f. Transmitter enclosure:
    1) NEMA Type 7.
g. Transmitter mounting:
    1) As specified on the Instrument Data Sheets or Instrument Index.
    2) Connection to thermowell: 1/2-inch NPT.
    3) Provide all necessary hardware for transmitter mounting.

2.3 ACCESSORIES

A. Thermowell:
    1. Unless otherwise noted, provide a thermowell with each RTD.
    2. Process connection: As identified on instrument data sheet.
    3. Thermowell material: Type 316L stainless steel
    4. Stem style: As identified on instrument data sheet.
    5. Immersion depth:
        a. Minimum 3 inches or 10 times the diameter of the thermowell, whichever is larger.
        b. Where pipe diameter is inadequate for appropriate immersion depth, install thermowell in an elbow on the axis of the pipe.
        c. As identified on instrument data sheet.

B. Provide sunshades for outdoor installations.

2.4 SOURCE QUALITY CONTROL

A. As specified in the Common Work Results for Process Control and Instrumentation Systems Section.

B. Factory calibrate each instrument with a minimum 3-point calibration or according to Manufacturer’s standard at a facility that is traceable to the NIST.
    1. Submit calibration data sheets to the Engineer at least 30 days before shipment of the instruments to the project site.

PART 3 EXECUTION

3.1 EXAMINATION

A. Examine the installation location for the instrument and verify that the instrument will work properly when installed.
    1. Notify the Engineer promptly if any installation condition does not meet the instrument manufacturer’s recommendations or specifications.

3.2 PREPARATION (NOT USED)

3.3 INSTALLATION

A. As specified in the Common Work Results for Process Control and Instrumentation Systems Section.

B. Coordinate the installation with all trades to ensure that the mechanical system has all necessary appurtenances including weld-o-lets, valves, etc. for proper installation of instruments.

C. Apply thermally conductive silicone grease to the sensor tip before insertion in thermowell.

3.4 FIELD QUALITY CONTROL

A. As specified in the Common Work Results for Process Control and Instrumentation Systems Section.

3.5 ADJUSTING

A. As specified in the Commissioning for Instrumentation and Controls Section.

3.6 CLEANING

A. As specified in the Common Work Results for Process Control and Instrumentation Systems Section.

3.7 DEMONSTRATION AND TRAINING

A. As specified in the Common Work Results for Process Control and Instrumentation Systems Section.

3.8 PROTECTION

A. As specified in the Common Work Results for Process Control and Instrumentation Systems Section.

3.9 SCHEDULES

A. The provided information does not necessarily include all required instruments. Provide all instruments identified in the Contract Documents:
   1. Instruments may be indicated on the Drawings, specified in the Specifications, or both.
   2. Contractor shall coordinate the selection of the material, ranges, span, and accessories and options with the process being measured to ensure a complete and operating system

END OF SECTION

SECTION 277100

CONTROL SYSTEMS: PANELS, ENCLOSURES, AND PANEL COMPONENTS

PART 1 GENERAL

1.1 SUMMARY

A. Section includes:
   1. Design, fabrication and assembly of all instrumentation enclosures, control panels and components provided under this contract, including but not limited to:
      a. Custom built instrumentation and control panels, including all enclosures for hand stations controllers, low voltage power distribution and marshalling panels.
      b. Control panels furnished as part of equipment systems specified in other Divisions, such as vendor control panels (VCPs) and chemical feed panels.
      c. Control components.
      d. Control panel installation.

B. Provide all control panels identified in Contract Documents.

1.2 REFERENCES

A. As specified in the Common Work Results for Process Control and Instrumentation Systems Section.

B. Institute of Electrical and Electronics Engineers (IEEE):
   1. C62.41.1 - Guide on the Surge Environment in Low-Voltage (1000 V and less) AC Power Circuits.
   2. 802.3af - Standard for Information Technology Telecommunications and Information Exchange Between Systems - Local and Metropolitan Area Networks - Specific Requirements Part 3: Carrier Sense Multiple Access with Collision Detection (CSMA/CD) Access Method and Physical Layer Specifications.
   3. 802.3at - Standard for Information Technology -- Local and Metropolitan area networks -- Specific requirements -- Part 3: CSMA/CD Access Method and Physical Layer Specifications Amendment 3: Data Terminal Equipment (DTE) Power via the Media Dependent Interface (MDI) Enhancements.

C. International Electrotechnical Commission (IEC):
   1. 61643-11 - Low-Voltage Surge Protective Devices - Part 11: Surge Protective Devices Connected to Low-Voltage Power Systems - Requirements and test methods.
   2. 61643-21 - Low-Voltage Surge Protective Devices - Part 21: Surge Protective Devices Connected to Telecommunications and Signaling Networks - Performance Requirements and Testing Methods.

D. Underwriters Laboratories Inc. (UL):
   1. 248-14 - Low-Voltage Fuses - Part 14: Supplemental Fuses.
   2. 497B - Standard for Protectors for Data Communications and Fire-Alarm Circuits.
   3. 508 - Standard for Industrial Control Equipment.
   4. 508A - Standard for Industrial Control Panel.
   5. 698A - Standard for Industrial Control Panels Relating to Hazardous (Classified) Locations.
   6. 1077 - Standard for Supplementary Protectors for Use in Electrical Equipment.
   7. 1283 - Standard for Electromagnetic Interference Filters.

8. 1449 - Standard for Surge Protective Devices.

1.3 DEFINITIONS

A. As specified in the Common Work Results for Process Control and Instrumentation Systems Section.

B. Specific definitions:
   1. The term “panel” in this Section is interchangeable with the term “enclosure.”

1.4 SUBMITTALS

A. Provide submittals as specified in the Common Work Results for Process Control and Instrumentation Systems Section.

B. Provide a control panel hardware submittal for each control panel and enclosure being provided on this project, including but not limited to:
   1. Product data:
      a. Enclosure construction details and NEMA type.
      b. Manufacturer's literature and specification data sheets for each type of equipment to be installed within or on the panel or enclosure.
   2. Shop drawings:
      a. Scaled, detailed exterior panel (front and side views) and interior panel layout showing equipment arrangement and dimensional information:
         1) Provide draft for review and approval by Engineer. The Engineer has the authority to substantially alter initial panel layouts.
      b. Complete nameplate engraving schedule.
      c. Structural details of fabricated panels.
   3. Calculations:
      a. Provide installation details based on calculated shear and tension forces:
         1) Calculations shall be signed and sealed by a Professional Engineer licensed in the state where the cabinets and panels will be installed.
      b. For assembled enclosures and other equipment with a weight of 200 pounds or more, provide calculations for:
         1) Weight including panel internal components.
         2) Seismic forces and overturning moments.
         3) Shear and tension forces in connections.
      c. Cooling calculations, including but not limited to:
         1) Highest expected ambient temperature for the enclosure's location.
         2) Internal heat load.
         3) Exposure to direct sunlight.
         4) Dimensions of the enclosure in inches.
         5) Maximum allowable temperature inside the enclosure, based on the lowest operating temperature limit of the installed components.

C. Seismic design:
   1. Seismic panel construction:
      a. Seismic anchorage: Provide seismic design calculations and installation details for anchorage of all panels, enclosures, consoles, etc. to meet seismic requirements:
         1) Stamped by a Professional Engineer registered in the state where the project is being constructed.
      b. For floor-mounted freestanding panels weighing 200 pounds or more (assembled, including contents), submit calculations, data sheets, and other information to substantiate that panel, base, and framing meet minimum design strength requirements and seismic requirements as specified in the Seismic Design

Criteria Section. Calculations shall be signed and sealed by a Professional Engineer licensed in the state where the cabinets and panels will be installed.

1.5 QUALITY ASSURANCE

A. As specified in the Common Work Results for Process Control and Instrumentation Systems Section.

B. Assemble panels, enclosures, and rack systems along with all internal and external devices, wiring, equipment, and materials in a facility that is recognized by UL to assemble and certify UL-labeled control panels:
   1. Provide all components and equipment with UL 508 listing.
   2. All control panels shall be UL 508A labeled, unless the equipment in the panel and the design in the contract documents cannot be reasonably modified to meet the requirements for UL 508A labeling:
   3. Provide fuses for all equipment that is not UL or UR listed.
   4. Install all intrinsically safe circuits and equipment in accordance with UL698A.

1.6 DELIVERY, STORAGE, AND HANDLING

A. Project environmental conditions as specified in the Common Work Results for Process Control and Instrumentation Systems Section.
   1. Provide instruments suitable for the installed site conditions including, but not limited to, material compatibility, site altitude, site seismic conditions, humidity, and process and ambient temperatures.

1.7 PROJECT OR SITE CONDITIONS

A. As specified in the Common Work Results for Process Control and Instrumentation Section.

1.8 SEQUENCING (NOT USED)

1.9 SCHEDULING (NOT USED)

1.10 WARRANTY

A. As specified in the Common Work Results for Process Control and Instrumentation Systems Section.

1.11 SYSTEM START-UP (NOT USED)

1.12 OWNER'S INSTRUCTIONS (NOT USED)

1.13 COMMISSIONING (NOT USED)

1.14 MAINTENANCE (NOT USED)

PART 2 PRODUCTS

2.1 MANUFACTURERS

A. As listed below in the individual component paragraphs.

B. Provide instruments and other components performing similar functions of the same type, model, or class, and from 1 manufacturer.

2.2 SYSTEM DESCRIPTION

A. Panel dimensions:
   1. Minimum dimensions are scalable from or as indicated on the Drawings and are based upon manufacturer's non-certified information. It is the responsibility of the Contractor or manufacturer to design and size all panels:
      a. Size panels to provide space for all equipment, wiring, terminations, and other items in the panel, including space for future build out.
      b. Panel sizes that substantially deviate (within 3 inches in any dimension) from the sizes indicated on the Drawings must be approved by the Engineer.
      c. Maximum panel depth: 30 inches, unless otherwise indicated.

B. Structural design:
   1. Completed and installed panel work shall safely withstand seismic requirements at the project site as specified in the Common Work Results for Electrical Section. Enclosures and internal equipment shall be braced to prevent damage from specified forces.

2.3 EXISTING PRODUCTS (NOT USED)

2.4 MATERIALS

A. Construct and finish enclosures using materials capable of withstanding the mechanical, electrical, and thermal stresses, as well as the effects of humidity and corrosion that are likely to be encountered in normal service:
   1. Enclosures shall have the following properties:
      a. NEMA Type 1: Steel.
      b. NEMA Type 4: Steel with gasketed door, raintight.
      c. NEMA Type 4X: Type 316 stainless steel (unless Type 304 is indicated on the Drawings).
      d. NEMA Type 4X: Polycarbonate or fiberglass reinforced polyester (FRP) in corrosive areas where stainless steel is incompatible.
      e. NEMA Type 12: Steel with gasketed door, dusttight.
      f. NEMA Type 7: Cast aluminum.

B. Bolting material:
   1. Commercial quality 1/2-inch diameter, stainless steel hex-head Grade 5 bolts, nuts, and washers, with unified coarse (UNC) threads.
   2. Carriage bolts for attaching end plates.
   3. All other bolted joints shall have S.A.E. standard lock washers.

2.5 MANUFACTURED UNITS

A. Panels/enclosures:
   1. Manufacturers: One of the following or equal:
      a. Rittal.
      b. nVent/Hoffman.
      c. Saginaw Control & Engineering.
   2. Panel assembly:
      a. General guidelines for panel fabrication include:
         1) Continuous welds ground smooth.
         2) Exposed surfaces free of burrs and sharp edges.

3) Base formed of heavy channel iron, either galvanized or powder coated, minimum 1/2-inch holes at 12-inch spacing to accommodate anchoring of freestanding enclosures to floor.

b. Construct enclosure and mounting panel using stretcher-level quality sheet metal having minimum thickness not less than the following sizes (U.S. Standard Gauge):

Enclosure Height (inches)	Minimum Enclosure Steel Thickness (gauge)	Minimum Back Mounting Panel Thickness (gauge)
Wall-mounted up to 48	14	14
Up to 57	12	12
57 - 69	12	10
69 - 82	12, except 10 on back	10
82 or more	10	10

1) Use heavier sheet metal to meet seismic requirements at the project site or when required due to equipment requirements.

c. Construct supporting frame structure with angled, channeled, or folded rigid section of sheet metal, rigidly attached to and having essentially the same outer dimensions as the enclosure surface and having sufficient torsional rigidity to resist the bending moments applied via the enclosure surface when it is deflected.

d. Provide stiffeners for back mounting panels in enclosures larger than 4 feet. In addition, secure the panels in place by collar studs welded to the enclosure.

e. Door construction:
   1) Turned-back edges suitably braced and supported to maintain alignment and rigidity without sagging.
   2) Sufficient width to permit door opening without interference with rear projection of flush-mounted instruments.
   3) Heavy-gauge stainless steel hinges.
   4) For NEMA Type 12, Type 4, and Type 4X, provide oil-resistant neoprene sealing gasket and adhesive to seal cover to enclosure.
   5) Gasket installed to seal against roll lip on the enclosure opening.

f. Latches:
   1) For panels, provide each door with a 3-point latching mechanism and locking handle with rollers on the ends of the latch rods. Latch rods shall be connected to a common door handle, hold doors securely, and form a compressed seal between door and gasket, at the top, side, and bottom.
      a) Provide padlock for each enclosure with padlock provisions.
   2) Include an oiltight key-locking, 3-point latching mechanism on each door:
      a) Provide 2 keys per panel.
      b) All locks keyed alike.
   3) For large NEMA Type 4 and NEMA Type 4X cabinets not available with 3-point latching hardware, provide multiple clips and padlock hasps.

g. Panel cut-outs:
   1) Cut, punch, or drill cutouts for instruments, devices, and windows. Smoothly finish with rounded edges.
   2) Allow a minimum of 3-inch envelope around all displays, controllers, and monitors.
   3) Reinforce around cut-outs with steel angles or flat bars for the following:
      a) Large panel cutouts; for example, openings for local operator interfaces.

b) Pilot device groupings, where the removed metal exceeds 50 percent of the available metal.

3. In addition to the requirements specified above, the following requirements for NEMA Type 4X powder coated stainless steel enclosures apply:
   a. Minimum 14-gauge, Type 304 stainless steel.
   b. Captive stainless steel cover screws threaded into sealed wells.
   c. Inside finish: White polyester powder coating.
   d. Specifically designed for use with flange-mounted disconnect handles where required or as indicated on the Drawings.
4. Outdoor panels. Supplementary requirements for panels located outdoors are as follows:
   a. All enclosures located outdoors shall be explicitly designed and rated for outdoor service by the manufacturer.
   b. Door hardware: 316 Stainless steel.
   c. Provide factory installed rain canopy and sun shield for all enclosures with operator interface panels.
   d. Bases: Heavy channel, gasketed stainless steel bases, flanges up, for anchoring to pad.

B. Arrangement of components:
1. Arrange panel internal components for external conduit and piping to enter into panel either from above or below.
2. Arrange panel instruments and control devices in a logical configuration, associating pushbutton and selector switches with related readout devices, or as indicated on the Drawings.
3. Mount internal control components on an internal back panel. Devices may be mounted on the side panel only by special permission from the Engineer.
4. All control panel mounted operator interface devices shall be mounted between 3 feet and 5 feet above finished floor.

C. Overcurrent protection:
1. Main overcurrent device:
   a. Where the electrical power supply voltage to the control panel is more than 120 VAC, provide the panel with a flange-mounted disconnect handle operating a molded-case circuit breaker and provide a control power transformer for 120-VAC circuits:
      1) Door-mounted disconnect handles are not acceptable.
      2) Mechanically interlock the disconnect switch with the control enclosure doors so that no door can be opened unless the power is disconnected, and the disconnect switch cannot be closed until all doors are closed.
      3) Provide means to defeat the interlock.
      4) Lockable in the off position.
   b. Control panels supplied with 120 VAC:
      1) Provide an internal breaker with the line side terminals covered by a barrier.
      2) Provide a nameplate prominently positioned on the control panel identifying the location of the power source and a warning statement requiring the source to be disconnected before opening the door to the enclosure.
2. Provide circuit breakers as specified in the Low Voltage Molded Case Circuit Breakers Section.
3. Selection and ratings of protective devices:
   a. Interrupting ratings: Not less than the system maximum available fault current at the point of application.
   b. Voltage rating: Not less than the voltage of the application.
   c. Select current rating and trip characteristics to be suitable for:
      1) Maximum normal operating current.
      2) Inrush characteristics.

3) Coordination of the protective devices to each other and to the source breaker feeding the panel.

d. Circuit breakers, fuses, and motor overcurrent protection devices used for branch circuit protection must be UL 508A compliant.
   1) Circuit breakers listed under UL 1077 Standard for Supplementary Protectors that do not comply with UL 508A requirements are not acceptable.
   2) Miscellaneous, miniature, and micro fuses listed under UL 248 Part 14 that do not comply with UL 508A requirements are not acceptable.
   3) Manual motor controllers provided with an instantaneous-trip overcurrent mechanism listed under UL 508 that do not comply with UL 508A requirements are not acceptable.

4. Provide a separate protective device for each powered electrical device:
   a. An individual circuit breaker for each 120-VAC instrument installed within its respective control panel and clearly identified for function.
   b. An individual fuse for each PLC discrete output. Provide with individual blown fuse indication external of the I/O card:
      1) Size external fuse to open before any I/O-card-mounted fuses.
   c. Individual discrete inputs shall use a 1/2-ampere fuse.
      1) Control loops shall use a 5-ampere fuse.
   d. Install protective devices on the back mounting panel and identify by a service nameplate in accordance with the wiring diagrams.
5. Fuses for 4-to- 20 milliamperes signals:
   a. Provide durable, readily visible label for each fuse, clearly indicating the correct type, size, and ratings of replacement fuse:
      1) Label shall not cover or interfere with equipment manufacturer's instructions.
   b. An individual 1/2-ampere fuse for each 4-to-20 milliamperes analog loop powered from the control panel.
   c. Provide fuses rated for the voltage and available short-circuit current at which they are applied.
   d. Manufacturers: One of the following or equal:
      1) Ferraz Shawmut.
      2) Littelfuse.
      3) Bussmann.
6. Fuse holders:
   a. Modular type:
      1) DIN rail mounting on 35-millimeter rail.
      2) Touch-safe design: All connection terminals to be protected against accidental touch.
      3) Incorporates blown-fuse indicator.
      4) Plug-in style fuse terminals and fuse plugs are not acceptable.
   b. Provide nameplate identifying each fuse:
      1) As specified in the Identification for Electrical Systems Section.
   c. Manufacturers: One of the following or equal:
      1) Phoenix Contact, UT4-HESI Series.
      2) Allen-Bradley, 1492-FB Series B.
7. Control circuit breakers:
   a. DIN rail mounting on 35-millimeter rail.
   b. Manual OPEN-CLOSE toggle switch.
   c. Rated for 250 VAC.
   d. Interrupting rating: 10 kiloampere (kA) or available fault current at the line terminal, whichever is higher.
   e. Current ratings: As required for the application.
   f. Provide nameplate identifying each circuit breaker:
      1) As specified in the Identification for Electrical Systems Section.
   g. Manufacturers: One of the following or equal:

1) Phoenix Contact, TMC Series.
2) ABB.
3) Allen-Bradley.
4) Square D.

8. Electronic circuit protectors:
   a. Used where a NEC Class 2 power circuit is required to protect devices with NEC Class 2 power supplies.
   b. DIN rail mounting on 35-millimeter rail.
   c. Rated for 24 VDC.
   d. 4 channels to feed 4 independent power feeds to separate devices.
   e. Output current ratings: As required for the application.
   f. LED input status indication.
   g. LED failure status of each channel indication.
   h. Fail contacts.
   i. Provide nameplate identifying each circuit electronic circuit protector module:
      1) As specified in the Identification for Electrical Systems Section.
   j. Manufacturers: One of the following or equal:
      1) Rockwell Automation 1692-TD014.
      2) Puls PISA11 series.

D. Conductors and cables:
   1. Power and control wiring:
      a. Materials: Stranded, soft annealed copper.
      b. Insulation: 600 volts type MTW.
      c. Minimum sizes:
         1) Primary power distribution: 12 AWG.
         2) Secondary power distribution: 14 AWG.
         3) Control: 16 AWG.
      d. Color:
         1) AC power (line and load): Black.
         2) AC power (neutral): White.
         3) AC control: Red.
         4) AC control: Orange for foreign voltages.
         5) DC power and control (ungrounded): Blue.
         6) DC power and control (grounded): White with Blue stripe.
         7) Ground: Green.
   2. Signal cables:
      a. Materials: Stranded, soft annealed copper.
      b. Insulation: 600 volts, PVC outer jacket.
      c. Minimum size: 18 AWG paired triad.
      d. Overall aluminum shield (tape).
      e. Copper drain wire.
      f. Color:
         1) 2-Conductor:
            a) Positive (+): Black.
            b) Negative (-): White and red.
         2) 3-Conductor:
            a) Positive (+): Black.
            b) Negative (-): Red.
            c) Signal: White.
      g. Insulate the foil shielding and exposed drain wire for each signal cable with heat-shrink tubing.

E. Conductor identification:
   1. Identify each conductor and cable with unique wire numbers as specified in the Identification for Electrical Systems Section.

2. Readily identified without twisting the conductor.

F. General wiring requirements:
   1. Wiring methods: Wiring methods and materials for panels shall be in accordance with the NEC requirements for General Purpose (no open wiring) unless otherwise specified.
   2. Install all components in accordance with the manufacturer's instructions included in the listing and labeling.
   3. Provide a nameplate on the cover of the control panel identifying all sources of power supply and foreign voltages within the control panel.
   4. Provide transformers, protective devices, and power supplies required to convert the supply voltage to the needed utilization voltage.
   5. Provide power surge protection for all control panels.
   6. Provide signal surge protection within control panels for each analog I/O, discrete I/O, and data line (Copper Ethernet, Coax, Fieldbus signals) that originates from outdoor devices.
   7. Provide non-metallic ducts for routing and organization of conductors and cables:
      a. Provide wiring separation plan.
      b. Size ducts for ultimate build-out of the panel, or for 20-percent spare, whichever is greater.
      c. Provide separate ducts for signal and low-voltage wiring from power and 120-VAC control wiring:
         1) 120 VAC: Grey colored ducts.
         2) 24 VDC: White colored ducts.
   8. Cables shall be fastened with cable-mounting clamps or with cable ties supported by any of the following methods:
      a. Screw-on cable tie mounts.
      b. Hammer-on cable-tie mounting clips.
      c. Fingers of the nonmetallic duct.
   9. Wire ties:
      a. No wire ties inside wire duct.
      b. Use Panduit Cable tie installation tool, with tension control/cutoff.
      c. Verify cut ends are cut flush filed smooth after installed.
   10. Provide supports at the ends of cables to prevent mechanical stresses at the termination of conductors.
   11. Support panel conductors where necessary to keep them in place.
   12. Wiring to rear terminals on panel-mount instruments shall be run in nonmetallic duct secured to horizontal brackets run adjacent to the instruments.
   13. Conductors and cables shall be run from terminal to terminal without splice or joints. Exceptions:
      a. Factory-applied connectors molded onto cables shall be permitted. Such connectors shall not be considered as splices or joints.
   14. The control panel shall be the source of power for all 120-VAC devices interconnected with the control panel including, but not limited to:
      a. Solenoid valves.
      b. Instruments both mounted in the control panel and remotely connected to the control panel.

G. Provide power circuits for all Contractor and Vendor-furnished PLC cabinets in accordance with the PLC and Instrument Power wiring diagrams Indicated on the Drawings or as specified.

2.6 EQUIPMENT (NOT USED)

2.7 COMPONENTS

A. Thermal management:
   1. Provide heating, cooling, and dehumidifying devices in order to maintain all instrumentation and control devices to within a range as specified in the Common Work Results for Process Control and Instrumentation Section.
   2. Air conditioner:
      a. Provide solid-state cabinet coolers or air conditioning units on all outdoor panels containing electronic components such as local operator interfaces, panel instruments, programmable logic controllers, or remote I/O.
      b. Provide filters on intake and exhaust openings.
      c. Increase panel sizes as needed to accommodate cooling units.
      d. Enclosure rating: NEMA Type 4X.
      e. Closed-loop design.
      f. Power supply: 120 VAC.
      g. Manufacturers: The following or equal:
         1) Kooltronic, GuardianX DP Series.
         2) ICEqube, Blade series or IECEx/ATEX for Zone 1 & 2.
   3. Heating:
      a. Provide all panels located in areas that are not climate controlled with thermostatically controlled strip heaters, except where all of the following conditions apply:
         1) The panel is not supplied with 120 VAC power.
         2) There are no electronics or moisture-sensitive devices in the enclosure.
         3) The panel is smaller than 38 inches high.
   4. Heat exchanger:
      a. Closed-loop design ensuring separation of ambient air and clean air inside the cabinet.
      b. Filterless design to facilitate easy cleaning of the core.
      c. Mounting: As indicated on the Drawings.
      d. Manufacturers: The following or equal:
         1) Noren, CC Series.
         2) ICEqube, Blade series.
   5. Enclosure temperature switch:
      a. Provide wall-mounted bimetallic switch transmitter (to measure internal cabinet temperature in all enclosures) containing electrical components such as PLCs, RTUs, RIO, and VFDs.
      b. Sensor and electronic enclosure.
      c. Accuracy: Within 2 degrees Fahrenheit.
      d. Single contact:
         1) Manufacturers: One of the following or equal:
            a) nVent/Hoffman ATEMNC.
            b) Pfannenberg FLZ.
      e. Dual contact:
         1) Manufacturers: The following or equal:
            a) nVent/Hoffman ADLTEMP.
   6. Status relays and discrete inputs for switches, power supplies, and fieldbus devices (if applicable):
      a. Provide as indicated on the Drawings or as specified.
   7. Fan ventilation:
      a. Provide nVent/Hoffman fan speed control:
         1) Provide 2 door/cabinet-mounted vent fans for every 72 inches of cabinet width.
         2) Provide finger-guard kit.

3) Filter kit with 2 spare filters for each intake fan.
4) Provide bezel and gasket kit.
5) Provide fan shroud.
6) Automatically adjust fan speed depending on remote temperature sensor input.
7) 120 VAC, 60 hertz.
8) NEMA Type 5-15R cord connections.

B. Pilot devices:
1. General:
a. Provide operator pushbuttons, switches, and pilot lights, from a single manufacturer.
b. Size:
1) 30.5 millimeters.
c. Heavy duty.
d. Pushbuttons:
1) Contacts rated:
a) NEMA Type A600.
2) Furnish 1 spare normally open contact and normally closed contact with each switch.
e. Selector switches:
1) Contacts rated:
a) NEMA Type A600.
b) Knob type.
2) Furnish 1 spare normally open contact and normally closed contact with each switch.
3) Provisions for locking in the OFF position where lockout provisions are indicated on the Drawings.
f. Pilot lights:
1) Type:
a) LED for interior installations.
2) Push to test.
3) Lamp color:
a) On/Running/Start: Red.
b) Off/Stop: Green.
c) Power: White.
d) Alarm: Amber.
e) Status or normal condition: White.
f) Opened: Red.
g) Closed: Green.
h) Failure: Red.
2. Indoor and outdoor areas:
a. NEMA Type 4/13.
b. Manufacturers: One of the following or equal:
1) Allen-Bradley, Type 800T.
2) Schneider Electric, Class 9001, Type K.
3) General Electric, Type CR104P.
4) IDEC, TWTD Series.
3. Corrosive areas:
a. NEMA Type 4X.
b. Corrosion resistant.
c. Exterior parts of high-impact strength fiberglass-reinforced polyester or multiple-layer epoxy-coated zinc.
d. Manufacturers: One of the following or equal:
1) Cutler Hammer, Type E34.
2) Schneider Electric, Class 9001, Type SK.

3) Allen-Bradley Type 800H.
4) IDEC, TWTD Series.

4. Hazardous (Classified) Areas/Class I Division 2:
   a. NEMA Type 4X.
   b. Corrosion resistant.
   c. Exterior parts of high-impact strength fiberglass-reinforced polyester or multiple-layer epoxy-coated zinc:
      1) All contacts contained within a hermetically sealed chamber:
         a) Pushbuttons.
         b) Selector switches.
         c) Push-to-test contacts on pilot lights.
      2) UL listed and labeled for Class I Division 2 areas.
   d. Manufacturers: One of the following or equal:
      1) Cutler Hammer, Type E34.
      2) Allen-Bradley, Type 800H.
5. Hazardous (Classified) Areas/Class I Division 1:
   a. Corrosion resistant.
   b. Exterior parts of high-impact strength fiberglass-reinforced polyester or multiple-layer epoxy-coated zinc:
      1) All contacts contained within a hermetically sealed chamber:
         a) Pushbuttons.
         b) Selector switches.
         c) Push-to-test contacts on pilot lights.
      2) UL listed and labeled for Class I Division 1 areas.
   c. Manufacturers: One of the following or equal:
      1) Cutler Hammer, Type E34.
      2) Allen-Bradley, Type 800H.

C. Signal isolators and converters:
   1. Furnish signal isolators that provide complete isolation of input, output, and power input:
      a. Minimum isolation level: 1.0 kilovolts AC/50 hertz for at least 1 minute.
      b. Adjustable span and zero.
      c. Accuracy: Within 1.0 percent of span.
      d. Ambient temperature range: -4 degrees to 149 degrees Fahrenheit.
   2. Manufacturers: One of the following or equal:
      a. Phoenix Contact, Mini Analog Pro.
      b. Acromag, 1500, 600T, 800T, Flat Pack, or ACR Series.
      c. Action Instruments, Q500 Series or Ultra SlimPakII.
      d. AGM Electronics, Model TA-4000.
      e. Moore Industries, MIT 4-Channel.

D. Relays:
   1. General:
      a. For all types of 120-VAC relays, provide surge protection across the coil of each relay.
      b. For all types of 24-VDC relays, provide a free-wheeling diode across the coil of each relay.
      c. For plug in type relays, provide a relay base from the same manufacturer as the relay manufacturer.
   2. General purpose:
      a. Magnetic control relays.
      b. NEMA ratings:
         1) 300 volts.
         2) 10 Amps thermal continuous test current.
         3) 60 Amps make.

4) 6 Amps break.
c. Plug-in type.
d. LED indication for energization status.
e. Coil voltages: As required for the application.
f. Minimum poles: DPDT.
g. Touch-safe design: All connection terminals to be protected against accidental touch.
h. Enclose each relay in a clear plastic heat and shock-resistant dust cover.
i. Quantity and type of contact shall be as indicated on the Drawings or as needed for system compatibility.
j. Relays with screw-type socket terminals.
k. Provide additional (slave/interposing) relays when the following occurs:
1) The number or type of contacts shown exceeds the contact capacity of the specified relays.
2) Higher contact rating is required in order to interface with starter circuits or other equipment.
l. DIN rail mounting on 35-millimeter rail.
m. Ice-cube-type relays with retainer clips to secure relay in socket.
n. Integrated label holder for device labeling.
o. Manufacturers: One of the following or equal:
1) Potter and Brumfield: Type KRP or KUP.
2) IDEC: R* Series (* = H, J, R, S, U).
3) Allen-Bradley: Type 700 HC.
4) Square D: Type K.

3. Terminal block relays:
a. Magnetic control relays.
b. For use as an interposing relay for PLC based discrete I/O signals.
c. NEMA ratings:
1) 250 volts.
2) 6 Amps continuous.
3) 1,500 volt-amperes make.
d. Plug-in type.
e. LED indication for energization status.
f. Coil voltages: As required for the application.
g. Minimum poles: SPDT.
h. Touch-safe design: All connection terminals to be protected against accidental touch.
i. Quantity and type of contact shall be as indicated on the Drawings or as needed for system compatibility.
j. Relays with screw-type socket terminals.
k. DIN rail mounting on 35-millimeter rail.
l. Integrated label holder for device labeling.
m. Manufacturer: One of the following or equal:
1) Phoenix Contact PLC Series.
2) Eaton XR TBR Series.
3) IDEC RV8H Series.
4) Allen-Bradley Type 700 HL TBR Series.

4. Latching:
a. Magnetic-latching control relays.
b. NEMA ratings:
1) 300 volts.
2) 5 Amps continuous.
3) 360 volt-amperes make.
4) 320 volt-amperes break.
c. Plug-in type.
d. DIN rail mounting on 35-millimeter rail.

e. Coil voltage: As required for the application.
f. Minimum poles: 2 PDT; as required for the application. Plus 1 spare pole.
g. Touch-safe design: All connection terminals to be protected against accidental touch.
h. Clear cover for visual inspection.
i. Provide retainer clip to secure relay in socket.
j. Manufacturers: One of the following or equal:
1) Square D, 8501, Type K.
2) IDEC, RR2KP Series.

E. Terminal blocks:
1. DIN rail mounting on 35-millimeter rail.
2. Rated for 15 amperes at 600 volts.
3. Screw terminal type.
4. Provide mechanism to prevent wire connection from loosening in environments where vibration is present. This mechanism shall not cause permanent deformation to the metal body.
5. Finger-safe protection for all terminals for conductors.
6. Construction: Polyamide insulation material capable of withstanding temperature extremes from -40 degrees to 221 degrees Fahrenheit.
7. Terminals: Plainly identified to correspond with markings on the diagrams:
a. Permanent machine-printed terminal identification.
8. Disconnect-type field signal conductor terminals with socket/screw for testing.
9. Identify terminals suitable for use with more than 1 conductor.
10. Position:
a. So that the internal and external wiring does not cross.
b. To provide unobstructed access to the terminals and their conductors.
11. Provide minimum 25-percent spare terminals.
12. Manufacturers: One of the following or equal:
a. Phoenix Contact, UT4 Series.
b. Allen-Bradley, 1492 Series.

F. DIN rail grounding:
1. Grounding terminal blocks used exclusively for bonding each DIN rail section to panel grounding busbar shall:
a. Mount to DIN rail via grounding foot with mounting screw.
b. Connect to the panel grounding busbar shall be via a green insulated conductor sized in accordance with NEC.
c. Not be used for grounding signal cable shields.
2. Screw terminal type.
3. DIN rail mounting on 35-millimeter rail.
4. Provide mechanism to prevent wire connection from loosening in environments where vibration is present. This mechanism shall not cause permanent deformation to the metal body.
5. Finger-safe protection for all terminals for conductors.
6. Terminals: Plainly identified to correspond with markings on the diagrams:
a. Permanent machine-printed terminal identification.
7. Manufacturers: One of the following or equal:
a. Phoenix Contact, USKLG Series.
b. Allen-Bradley, 1492-JG Series.

G. Wire duct:
1. Provide flame retardant plastic wiring duct, slotted with dust cover.
2. Type:
a. Wide slot.
b. Narrow slot.

c. Round hole.

3. Manufacturers: The following or equal:
   a. Panduit.
   b. Phoenix Contact.
   c. Thomas & Betts.
   d. Iboco.

H. DIN rail:
1. Perforated steel.
2. 35 mm width.
3. 15 mm deep.
4. Provide 2-inch offset using one of the following:
   a. Offset brackets.
   b. Preformed standoff DIN Rail Channel.

I. Surge protection devices (SPD):
1. 120 VAC control panel power SPD:
   a. Provide SPD for panel 120 VAC power entrances:
      1) Non-faulting and non-interrupting design.
      2) Provide line to neutral and neutral to ground surge protection.
   b. Provide surge protection at secondary of main circuit breaker:
      1) Surge protection is not required for 120 VAC circuits that are only used for panel lights and receptacles.
      2) For panels receiving power at 480 VAC, provide surge protection on the 120 VAC control power transformer secondary.
   c. DIN rail mounting.
   d. Attach wiring to the SPD by means of a screw-type cable-clamping terminal block:
      1) Gastight connections.
      2) Visual status indication of MOV status on the input and output circuits.
      3) Dry contact rated for remote status indication.
   e. Approvals:
      1) Tested in accordance with IEC 61643-11.
      2) Tested in accordance with UL 1283.
      3) Tested in accordance with UL 1449.
      4) Surge protection minimum requirements: Withstand a minimum 10-kA test current of an 8/20 µs waveform in accordance with IEEE C62.41.1 Category C Area.
   f. Manufacturers: One of the following or equal:
      1) Phoenix Contact, Type SFP Filter.
      2) ASCO, Model 277.
2. 24 VDC control panel power SPD:
   a. Provide SPD for 24VDC power circuits.
   b. Provide surge protection at DC power supply output.
   c. DIN rail mounting.
   d. Attach wiring to the SPD by means of a screw-type cable clamping terminal block:
      1) Optical status indicator.
      2) Dry contact rated for remote status indication.
   e. Approvals:
      1) Tested in accordance with IEC 61643-11.
   f. Manufacturers: One of the following or equal:
      1) Phoenix Contact, Plugtrab PLT-SEC-T3-24-FM-UT.
3. Panel mounted control, signal, and data line SPD:
   a. General:

1) This section applies to SPD located in a control panel, field panel, network junction box, or marshalling panel.
2) Approvals:
    a) Tested in accordance with IEC 61643-21.
    b) Tested in accordance with UL 497B.
3) SPD shall consists of 2 parts:
    a) Base module:
        (1) DIN rail mounting.
            (a) Grounded to DIN rail via mounting rail foot.
    b) Plug protection module:
        (1) Replacing a plug shall not require the removal of any wires nor interrupt the signal.
4) Provide indirect shield ground style SPD unless otherwise noted.
5) Provide ability to locally identify and indicate SPD health.
6) SPD shall be provided with controller module with dry contact for remote status monitoring of SPD device health.
7) SPD modules shall be compatible with signal, communication bus type, data type, or control power being protected.
8) Provide dedicated SPD for each signal, communication bus type, or data line being protected.

b. Manufacturers: One of the following or equal:
1) Phoenix Contact, Plugtrab PT-IQ Series.
2) Dehn, Blitzductor XTU Series.

4. Copper Ethernet SPD:
a. Protects network equipment from lightning or other surge events.
b. Suitable for Gigabit networks.
c. Compatible with shielded Cat 6 cabling with shielded RJ-45 ports.
d. Compliant with PoE standards IEEE 802.3af and 802.3at.
e. Nominal discharge surge current: 10 kA.
f. Approvals:
1) Tested in accordance with IEC 61643-21.
2) Tested in accordance with UL 497B.
g. Manufacturers: One of the following or equal:
1) Phoenix Contact, DT-LAN-CAT6+.
2) Weidmuller, VDATA CAT6.
3) Eaton/MTL, ZoneBarrier.

5. Field device mounted SPD:
a. Conduit entry mounting.
1) Provide parallel or through wiring configurations as required by the application.
    a) Use parallel wiring configuration if there is an available cable gland at the device.
    b) Use through wiring configuration if there is no available cable gland at the device.
2) Provide Screw connections compatible with field device.
b. NEMA 4X 316 stainless steel material housing.
c. Approvals:
1) Tested in accordance with IEC 61643-21.
d. 4-wire field device:
1) Module shall provide simultaneous protection of signal cable, communication bus, or data line, and power supply line.
    a) Maximum continuous voltage:
        (1) DC:
            (a) Signal: 32 VDC.
            (b) Power supply: 255 VDC.

(2) AC:
(a) Signal: 22.6 VAC.
(b) Power supply: 255 VAC.
2) Manufacturers: The following, engineer knows of no equal:
a) Endress+Hauser, HAW569-CB2C.
e. 2-wire or 3-wire field device:
1) Module shall provide protection for the signal cable, communication bus or data line.
2) Manufacturers: One of the following or equal:
a) Endress+Hauser, HAW569 Series.
b) Phoenix Contact, Surgetrab S-PT Series.
c) Eaton/MTL, TP Series.

J. Power supplies:
1. Design power supply system so that either the primary or backup supply can be removed, repaired or replaced, and returned to service without disrupting the system operation.
2. Convert 120 VAC to 24-volt DC or other DC voltages required or as required for the application.
3. Provide redundant backup 24 VDC power supply units to automatically supply the load upon failure of the primary supply.
4. Provide power supply arrangement that is configured with several modules to supply adequate power in the event of a single module failure in either a 1+1 or N+1 configuration as required:
a. Provide automatic switchover upon module failure.
b. Alarm contacts monitored by the PLC.
5. Provide protective isolation between power supply units either by means of Diodes, Diode Modules, MOSFET Modules, or use power supplies with built in redundancy. Power supplies with built in redundancy must actively isolate each power supply and be designed as such.
6. Sized to provide 40-percent excess rated capacity.
7. UL 508C listed to allow full-rated output without de-rating.
8. Provide fuse or short-circuit protection.
9. Provide a minimum of 1 set of dry contacts for each power supply configured to change state on failure for monitoring and signaling purposes.
10. Output regulation: Within 0.05 percent for a 10-percent line change or a 50-percent load change.
11. Operating temperature range: 32 degrees to 140 degrees Fahrenheit.
12. Touch-safe design: All connection terminals to be protected against accidental touch.
13. DIN rail mounting on 35-millimeter rail:
a. Mount the power supply in the proper orientation as recommended by the manufacturer to ensure adequate thermal dispersion without derating the power supply.
14. Provide self-protecting power supplies with a means of limiting DC current in case of short circuit.
15. Manufacturers: One of the following or equal:
a. Fully redundant:
1) Phoenix Contact, Quint Power Supply with SFB technology.
a) Phoenix Contact, Quint.
2) IDEC, PS5R Series:
3) Sola.
4) PULS.
b. Redundancy module:
1) Phoenix contact, o-ring redundancy module.

2.8 ACCESSORIES

A. As specified in the Common Work Results for Process Control and Instrumentation Systems Section.

B. Provide panels with an inside protective pocket to hold the panel drawings. Ship panels with 1 copy of accepted Shop Drawings including, but not limited to, schematic diagram, connection diagram, and layout drawing of control wiring and components in a sealed plastic bag stored in the panel drawing pocket.

C. Provide 15-inch floor stands or legs where needed or as indicated on the Drawings.

D. Provide a folding shelf for enclosures that contain programmable controllers. The shelf shall be mounted on the inside surface of the door, capable of supporting a laptop computer.

E. Provide nameplate to each panel as indicated on the Drawings:
   1. Provide as specified in the Identification for Electrical Systems Section on all internal and external instruments and devices.
   2. Provide a nameplate with the following markings that is plainly visible after installation:
      a. Manufacturer's name, trademark, or other descriptive marking by which the organization responsible for the panel can be identified.
      b. Supply voltage, phase, frequency, and full-load current.
      c. Power source or circuit ID.
      d. Short-circuit current rating of the panel based on one of the following:
         1) Short-circuit current rating of a listed and labeled assembly.
         2) Short-circuit current rating established utilizing an approved method.

F. Provide a window kit where indicated on the Drawings or where a transmitter with display is mounted inside a control panel. The window shall meet the following requirements:
   1. Safety plate glass.
   2. Secured by rubber locking seal.
   3. Allow full viewing of devices issuing visual process data or diagnostics.

G. Lighting:
   1. Provide 1 luminaire for each section, on the interior of the panel, spaced evenly along the top-front of the enclosure door opening(s):
      a. Covered or guarded.
      b. Provide On-Off door-activated switches where indicated on the Drawings.
      c. 120-volt, single-phase, 15-amp style plug.
      d. Provide 4,000 K, 900 Lumens - LED fixture.
         1) Provide additional fixtures for every 36 inches of width.

H. Receptacles:
   1. Provide 1 duplex receptacle located every 6 feet of enclosure width, spaced evenly along the back mounting panels.
   2. GFCI, 120-volt, single-phase, 15-amp style plug.
   3. Provide circuit breaker or fuse to limit receptacle draw to 5 amperes.

I. Grounding:
   1. Provide the following:
      a. Grounding strap between enclosure doors and the enclosure.
      b. Equipment grounding conductor terminals.
      c. Provide equipment grounding busbar with lugs for connection of all equipment grounding wires.

d. Bond multi-section panels together with an equipment grounding conductor or an equivalent grounding busbar.

2. Identify equipment grounding conductor terminals with the word “GROUND,” the letters “GND,” the letter “G,” or the color green.
3. Signal cable shields shall only be grounded at a single point in the loop. Unless otherwise noted, ground signal cable shields at control panel.
4. Ensure the continuity of the equipment grounding system by effective connections through conductors or structural members.
5. Design so that removing a device does not interrupt the continuity of the equipment-grounding circuit.
6. Provide an equipment-grounding terminal for each incoming power circuit, near the phase conductor terminal.
7. Size ground wires in accordance with NEC and UL Standards, unless noted otherwise.
8. Unless otherwise noted, connect all exposed, noncurrent-carrying conductive parts, devices, and equipment to the equipment-grounding circuit.
9. Connect the door stud on the enclosures to an equipment-grounding terminal within the enclosure using an equipment-bonding jumper.

J. Provide sunshades and insulation for all outdoor installations.

2.9 MIXES (NOT USED)

2.10 FABRICATION (NOT USED)

2.11 FINISHES

A. Finishes:
1. Metallic (non-stainless):
a. Metal surfaces of panels shall be prepared by chemical cleaning and mechanical abrasion in accordance with the finish manufacturer’s recommendations to achieve a smooth, well-finished surface.
b. Scratches or blemishes shall be filled before finishing. One coat of zinc phosphate shall be applied per the manufacturer’s recommended dry-film thickness and allowed to dry before applying the finish coat.
c. Finish coat shall be a baked polyester-urethane powder, aliphatic air-dry polyurethane, or epoxy enamel to meet NEMA rating specified application.
d. Exterior of enclosures located outdoors shall be UV-resistant polyester powder coating. Total dry film thickness shall be 3 mils, minimum.
2. Stainless steel:
a. Stainless enclosures shall be provided with a Number 4 brushed finish - not painted.

B. Colors:
1. Exterior color of panels mounted indoors shall be manufacturer’s standard light gray.
2. Exterior of panels mounted outdoors shall be manufacturer’s standard white.
3. Panel interiors shall be manufacturer’s standard white.

2.12 SOURCE QUALITY CONTROL

A. As specified in the Common Work Results for Process Control and Instrumentation Systems Section.

PART 3 EXECUTION

3.1 EXAMINATION

A. Examine the installation location for the instrument and verify that the instrument will work properly when installed.
   1. Notify the Engineer promptly if any installation condition does not meet the instrument manufacturer's recommendations or specifications.

3.2 PREPARATION (NOT USED)

3.3 INSTALLATION

A. Install enclosures so that their surfaces are plumb and level within 1/8-inch over the entire surface of the panel; anchor securely to wall and structural supports at each corner, minimum. Direct attachment to drywall is not permitted.

B. Install the enclosure per guidelines and submitted installation instructions to meet the seismic requirements at the project site.

C. Provide floor stand kits for wall-mounted enclosures larger than 48 inches high.

D. Provide concrete housekeeping pads for freestanding enclosures.
   1. Refer to the structural typical details.

E. Install gasket and sealing material under panels with floor slab cutouts for conduit:
   1. Undercoat floor-mounted panels.

F. Provide a full-size equipment-grounding conductor in accordance with NEC included with the power feeder. Terminate to the incoming power circuit-grounding terminal.

G. All holes for field conduits, etc. shall be cut in the field. There shall be no additional holes, factory cut holes, or hole closers allowed. Incorrect holes, additional holes, or miscut holes shall require that the entire enclosure be replaced.

H. Protect all wiring from sharp edges and corners.

I. Control panels that are adjacent to motor control centers shall be fully wired to the motor control centers using wireways integral to the motor control center or additional conduits as needed. These interconnections are not shown or reflected on the Conduit Schedule but shall be shown on the Loop Drawings prepared by the Contractor.

J. Provide individually fused analog input module points with blown-fuse indicator lights, mounted external of the module on the output terminal strip.

K. Side panels:
   1. Side panels shall be kept free off all control equipment and devices. Any deviation must be sent to the engineer in writing asking for a deviation.

3.4 ERECTION, INSTALLATION, APPLICATION, AND CONSTRUCTION (NOT USED)

3.5 REPAIRS/RESTORATION (NOT USED)

3.6 RE-INSTALLATION (NOT USED)

3.7 FIELD QUALITY CONTROL

A. As specified in the Common Work Results for Process Control and Instrumentation Systems Section.

3.8 ADJUSTING (NOT USED)

3.9 CLEANING

A. As specified in the Common Work Results for Process Control and Instrumentation Systems Section.

3.10 DEMONSTRATION AND TRAINING (NOT USED)

3.11 PROTECTION

A. As specified in the Common Work Results for Process Control and Instrumentation Systems Section.

3.12 SCHEDULES (NOT USED)

END OF SECTION

THIS PAGE INTENTIONALLY LEFT BLANK FOR DOUBLE SIDED PRINTING

SECTION 277200

CONTROL SYSTEMS: PROGRAMMABLE LOGIC CONTROLLERS

PART 1 GENERAL

1.1 SUMMARY

A. Section includes:
1. Programmable logic controller (PLC) based control systems hardware.
2. Development software to be used with the specified PLC hardware.

1.2 REFERENCES

A. As specified in the Common Work Results for Process Control and Instrumentation Systems Section.

B. Institute of Electrical and Electronics Engineers (IEEE).

1.3 DEFINITIONS

A. As specified in the Common Work Results for Process Control and Instrumentation Systems Section.

B. Specific definitions:
1. CPU: Central processing unit.
2. I/O: Input/Output.

C. Specific definitions:
1. Development operating software: The software provided by the PLC manufacturer for use in programming the PLC.
2. Application software: The software that is programmed specifically for the Project.

1.4 SYSTEM DESCRIPTION

A. Provide all PLC hardware as indicated on the Drawings and as specified in this Section.

1.5 SUBMITTALS

A. Furnish submittals as specified in the Common Work Results for Process Control and Instrumentation Systems Section.

B. Product data:
1. CPU:
a. Processor type.
b. Processor speed.
c. Memory.
d. Internal processor battery backup time.
2. I/O modules:
a. Type.
b. Standard wiring diagram.

C. Calculations:

1. Submit calculations or documented estimate to verify that memory requirements of this Section are met, including spare requirements. If possible, use PLC manufacturer's calculation or estimating worksheet.
2. Submit calculations to verify that spare I/O requirements of this Section are met.
3. Submit calculations to verify that PLC power supply requirements of this Section are met.

D. Product data:
1. Programming languages.
2. Operating system requirements.

E. Control logic:
1. Fully annotated copy of programmed PLC logic.
2. Cross-referenced index of all PLC registers or points.

F. Provide application software for the specific Project process requirements.
1. Fully annotated copy of programmed PLC logic in its native format.
2. Cross-referenced index of all PLC registers or points.

1.6 QUALITY ASSURANCE

A. As specified in the Common Work Results for Process Control and Instrumentation Systems Section.

B. Provide PLC hardware manufactured at facilities certified to the quality standards of ISO 9001.

C. Additional requirements:
1. Provide PLC system components by a single manufacturer:
a. Third-party communication modules may be used only for communication or network media functions not provided by the PLC manufacturer.
2. Use PLC manufacturer approved hardware, such as cable, mounting hardware, connectors, enclosures, racks, communication cable, splitters, terminators, and taps.
3. All PLC hardware, CPUs, I/O devices, and communication devices shall be new, free from defects, and produced by manufacturers regularly engaged in the manufacture of these products.

1.7 DELIVERY, STORAGE, AND HANDLING

A. As specified in the Common Work Results for Process Control and Instrumentation Systems Section.

1.8 PROJECT OR SITE CONDITIONS

A. As specified in the Common Work Results for Process Control and Instrumentation Systems Section.

1.9 SEQUENCING (NOT USED)

1.10 SCHEDULING (NOT USED)

1.11 WARRANTY

A. As specified in the Common Work Results for Process Control and Instrumentation Systems Section.

1.12 SYSTEM START-UP (NOT USED)

1.13 OWNER'S INSTRUCTIONS (NOT USED)

1.14 COMMISSIONING (NOT USED)

1.15 MAINTENANCE

A. As specified in the Common Work Results for Process Control and Instrumentation Systems Section.

B. In addition to the spare parts requirements specified in the Common Work Results for Process Control and Instrumentation Systems Section.
   1. CPU: 1 spare for each type of CPU in the system.
   2. I/O cards: 3 spares for each type of I/O card in the system.
   3. Power supplies: 2 spares for every power supply in the system.
   4. Network/communications cards: 1 spare for every network or communications card in the system.
   5. Remote adapter: 1 spare for every remote adaptor in the system.
   6. Chassis: 1 spare for each chassis size in the system.
   7. Communication cable: 1 spare for each type of cable used in the system.

C. Installed spare requirements:
   1. I/O points:
      a. Provide total of 25 percent spare I/O capacity for each type of I/O at every PLC and remote inputs and outputs (RIO).
      b. Wire all spare I/O points to field terminal blocks in the same enclosure the PLC resides in.
   2. PLC backplane capacity:
      a. Provide 25-percent or 3 spare backplane slots, whichever is greater, in all racks containing I/O.
   3. PLC memory:
      a. Provide 50-percent spare program volatile memory.

PART 2 PRODUCTS

2.1 MANUFACTURERS

A. One of the following or equal:
   1. Rockwell Automation:
      a. CompactLogix.
   2. Modicon:
      a. M580.
      b. Momentum.
      c. M340.
   3. General Electric:
      a. RX3i.
      b. VersaMax.
      c. VersaMax Micro.

B. The PLC programming software system shall be manufactured by PLC hardware manufacturer:
   1. Rockwell Software:
      a. RSLogix 5000.

b. Studio 5000.
2. Modicon:
a. Unity Pro.
3. General Electric, Proficy Machine Edition with Logic Developer - PLC.

2.2 EXISTING PRODUCTS (NOT USED)

2.3 MATERIALS (NOT USED)

2.4 MANUFACTURED UNITS

A. Programmable logic controller:
1. Construction:
a. Furnish plug-in modular system.
b. Provide PLCs capable of operating in a hostile industrial environment without fans, air conditioning, or electrical filtering:
1) Temperature: 0 to 60 degrees Celsius.
2) RFI: 80 to 1,000 MHz.
3) Vibration: 10 to 500 hertz.
4) Humidity: 0 to 95 percent.
c. Provide internal power supplies designed to protect against overvoltage and frequency distortion characteristics frequently encountered with the local power utility.
d. Design the PLC system to function as a standalone unit that performs all of the control functions described in this Section completely independent from the functions of the HMI system PC-based operator interfaces:
1) Failure of the HMI system shall not impact data acquisition, control, scaling, alarm checking, or communication functions of the PLC.
2. CPU:
a. Configure each CPU so that it contains all the software relays, timers, counters, number storage registers, shift registers, sequencers, arithmetic capability, and comparators necessary to perform the specified control functions.
b. Capable of interfacing with all discrete inputs, analog inputs, discrete outputs, analog outputs, and communication cards to meet the specified requirements.
c. Capable of supporting and implementing closed-loop floating-point math and PID control that is directly integrated into the CPU control program.
3. Memory:
a. Non-volatile memory: On-board complementary metal-oxide-semiconductor (CMOS), electrically erasable programmable read-only memory (EEPROM), PCMCIA, compact flash card, or SD card.
b. Supply with sufficient memory to implement the specified control functions plus a reserve capacity as specified with the requirements of this Section:
1) Reserve capacity:
a) Totally free from any system use.
2) Programmed in a multi-mode configuration with multiple series or parallel contacts, function blocks, counters, timers, and arithmetic functions.
4. Programming:
a. Provide a system where processors are programmed by:
1) Portable laptop computer both locally and via the PLC control network.
5. PLC power supply:
a. Input: 120 VAC.
b. Mounted in the PLC housing or as indicated on the Drawings.
c. Sized to power all modules mounted in that housing including an average module load for any empty housing slots plus 50 percent above that total.
6. PLC input/output, I/O modules:
a. General:

1) Compatible with all of the PLCs being furnished under the contract and by the same manufacturer as the PLCs.
2) Provide I/O modules that:
    a) Isolate in accordance with IEEE Surge Withstand Standards and NEMA Noise Immunity Standards.
    b) Provide A/D and D/A converters with optically or galvanically isolated inputs and outputs.
    c) Accept dual-ended inputs.
3) The use of common grounds between I/O points is not acceptable.
4) Provide modules that are removable without having to disconnect wiring terminals:
    a) Utilize a swing-arm or plug-in wiring connector.
5) Provide at each PLC the I/O modules for the following:
    a) Designated future I/O points contained in the I/O Lists and/or shown on the P&IDs, control schematics, or described in the control strategies.
    b) Installed spare capacity in accordance with the requirements of this Section.
    c) Wire all spares provided to the field terminal strip.
6) Condition, filter, and check input signals for instrument limit conditions.
7) Filter, scale, and linearize the raw signal into an engineering-units-based measurement.
8) Alarm measurements for high, low, rate-of-change limits, and alarm trends.
9) Provide external fuses mounted on the field connection terminal block for all discrete input, discrete output, and analog input I/O points.
10) When multiple cards of the same I/O type are provided and parallel equipment, instrumentation, or redundant processes exist, distribute I/O among cards to ensure that a single card failure will not render an entire process unavailable.

b. Discrete input modules:
1) Defined as contact closure inputs from devices external to the input module.
2) Provide inputs that are optically isolated from low-energy common-mode transients to 1,500 volts peak from users wiring or other I/O modules.
3) Individually isolated inputs.
4) With LEDs to indicate status of each discrete input.
5) Input voltage: 120VAC.
6) Provide input module points that are individually fused with blown-fuse indicator lights, mounted external of the module on the output terminal strip:
    a) Coordinate external fuse size with the protection located on the module, so that the external fuse opens first under a fault condition.

c. Discrete output modules:
1) Defined as contact closure outputs for ON/OFF operation of devices external to the output module:
    a) Triac outputs may be used, with the permission of the Engineer. Care must be used in applying this type of module to ensure that the leakage current through the output device does not falsely signal or indicate an output condition.
2) Optically isolated from inductively generated, normal mode and low-energy common-mode transients to 1,500 volts peak.
3) LEDs to indicate status of each output point.
4) Output voltage: 120VAC.
5) Individually isolated outputs.

d. Analog input modules:
1) Signal type: Provide 4-20 mA for most applications; other levels are acceptable to interface to vendor control panels.
2) Analog-to-digital conversion: Minimum 12-bit precision with the digital result entered into the processor.

3) The analog-to-digital conversion updated with each scan of the processor.
4) Individually isolated each input.
5) Coordinate the size of the external fuse with the protection located on the module, so that the external fuse opens first under a fault condition.

e. Analog output modules:
1) Signal type: Provide 4-20 mA for most applications; other levels are acceptable to interface to vendor control panels.
2) Individual isolated output points each rated for loads of up to 1,000 ohms.

f. Specialty I/O modules:
1) Resistance temperature detector (RTD) input module:
a) Channels per module: 4 minimum.
b) RTD types accepted:
(1) 100-ohm platinum.
(2) 200-ohm platinum.
(3) 500-ohm platinum.
(4) 1,000-ohm platinum.
(5) 100-ohm nickel.
(6) 200-ohm nickel.
(7) 500-ohm nickel.
(8) 10-ohm copper.
c) Provide input module that accepts 2-, 3-, or 4-wire RTD.

g. Network communications modules:
1) General:
a) Install communications modules in the PLC backplane.
2) Ethernet:
a) Ports: 1RJ-45.
b) Communication rate: 100 Mbit/s.
3) Provide all network taps, connectors, termination resistors, drop cables, and trunk cables necessary for remote I/O communications.

7. PLC backplane housing:
a. Mount the PLC power supply, CPU, communications module, and I/O modules in a suitable standard PLC backplane or housing.
b. Provide spare slots in each PLC and RIO location in accordance with the requirements of this Section.
c. Provide a blank slot filler module for each spare slot.

B. PLC programming software:
1. Furnish operating software capable of monitoring and/or controlling the PLCs via the PLC data network:
a. Contain diagnostics to collect troubleshooting and performance data and display it in easy to understand graphs and tables.
b. Monitor devices at each drop on the PLC data network for proper communications.
c. Provide the ability to program all PLCs on the PLC data network from the Engineer’s console.
2. PLC programming laptop/desktop operating system:
a. Microsoft Windows 10.
3. The PLC programming software shall be suitable for the PLCs specified above.
4. PLC programming software for all programming, monitoring, searching, and editing:
a. Usable both on-line, while connected to the PLC, and off-line.
b. The operating software shall display multiple series and parallel contacts, coils, timers, counters, and mathematical function blocks.
c. Capable of disabling/forcing all inputs, outputs, and coils to simulate the elements of the ladder logic; forced elements shall be identifiable by means of color change.

d. Include a search capability to locate any address or element and its program location.
e. Display at the EC, PLC status information, such as faults and communication errors and amount of memory remaining.

5. The PLC programming software shall support the following programming languages:
   a. Ladder Diagram.
6. Generate a PLC program printout, which is fully documented, through the PLC programming software:
   a. Fully documented program listings include, as a minimum, appropriate rungs, address, and coils shown with comments to clarify to a reader what that segment of the program accomplishes on an individual line-by-line basis.
   b. Include a sufficient embedded comment for every rung of the program explaining the control function accomplished in said rung.
   c. Use a mnemonic associated with each contact, coil, etc. that describes its function.
   d. Utilize the tag and loop identification as contained in the P&IDs:
      1) If additional internal coils, timers, etc. are used for a loop, they shall contain the loop number.
   e. Provide a cross-reference report of program addresses.
7. Software functions automatically without operator intervention, except as required to establish file names and similar information:
   a. Furnish the operating system software that is the standard uncorrupted product of the PLC manufacturer with the following minimum functions:
      1) Respond to demands from a program request.
      2) Dynamic allocation of the resources available in the PLC. These resources include main memory usage, computation time, peripheral usage, and I/O channel usage.
      3) Allotment of system resources based on task priority levels such that a logical allocation of resources and suitable response times are ensured.
      4) Queuing of requests in order of priority if one or more requested resources are unavailable.
      5) Resolution of contending requests for the same resource in accordance with priority.
      6) Service requests for execution of one program by another.
      7) Transfer data between programs as requested.
      8) Management of all information transfers to and from peripheral devices.
      9) Control and recovery from all program fault conditions.
      10) Diagnose and report real-time hardware device errors.
8. Program execution:
   a. Application software - program execution scheduled on a priority basis:
      1) A multilevel priority interrupt structure is required.
      2) Enter into a list of pending programs a program interrupted by a higher priority program:
         a) Resume its execution once it becomes the currently highest priority program.
      3) Schedule periodic programs.
      4) Base the allocation of resources to a time-scheduled program on its relative priority and the availability of resources.
9. Start-up and restart:
   a. Provide software that initializes and brings a PLC or any microprocessor-based hardware unit from an inactive condition to a state of operational readiness.
   b. Initialization:
      1) Determination of system status before start-up of initializing operating system software and initializing application software.
      2) Loading of all memory-resident software, initializing timers, counters, and queues, and initialization of all dynamic database values.

10. Shutdown:
    a. Where possible, provide orderly shutdown capability for shutdowns resulting from equipment failure, including other PLC processor failures, primary power failure, or a manually entered shutdown command.
    b. Upon loss of primary power, a high-priority hardware interrupt initiates software for an immediate, orderly shutdown.
    c. Hardware is quickly and automatically commanded to a secure state in response to shutdown command or malfunction.
    d. Alarm PLC failure at the operator interface level.
11. Diagnostics:
    a. Furnish diagnostic programs with the PLC software package to detect and isolate hardware problems and assist maintenance personnel in discovering the causes for system failures.
    b. Use the manufacturer's standard diagnostic routines as much as possible.
    c. Furnish diagnostic software and test programs for each significant component in the control system.
    d. As a minimum, provide diagnostic routines to test for power supply, central processing unit, memory, communications, and I/O bus failures.
12. Calendar/time program:
    a. The calendar/time program to update the second, minute, hour, day, month, and year and transfer accurate time and date information to all system-level and application software.
    b. Variations in the number of days in each month and in leap years must be handled automatically by the program.
    c. The operator must be able to set or correct the time and date from any operator interface, only at the highest security level.
13. Algorithms:
    a. Implementation of algorithms for the determinations of control actions and special calculations involving analog and discrete data.
    b. Algorithms must be capable of outputting positional or incremental control outputs or providing the product of calculations.
    c. Algorithms must include alarm checks where appropriate.
    d. Provide, as a minimum, the following types of algorithms:
        1) Performs functions such as summing several variables, raising to a power, roots, dividing, multiplying, and subtracting.
        2) A switch algorithm, which reads the current and value from its input address and stores it as the value of its output address. 2 types of switches shall be accommodated: 2 outputs with 1 input and 1 output with 2 inputs.
        3) A 3-mode proportional-integral-derivative, PID, controller algorithm, with each of the 3 modes independently adjustable, supports both direct and reverse-acting modes.
        4) Lead, lag, dead time, and ratio compensators.
        5) Integration and totalization of analog process variables.
14. Furnish a comprehensive database for the analog inputs, calculated values, control modules, and outputs:
    a. In addition, provide spare database points for future expansion.
15. One integrated database can be utilized for all types of analog points or separate databases for each type; in either case, the database for each point must include all specified aspects.
16. All portions of the database must be available for use by the display, report, and other specified software modules.
17. All of the data fields and functions specified below must be part of the point definition database at the operator interface. Provide the capability to define new database points through the point display specified below as well as modifying defined points through these displays. This point definition and modification must include all of the

features and functions defined below. The analog database software must support the following functions and attributes:

a. Analog input signal types:
    1) Provide software at the remote terminal units (RTUs) and PLCs to read variable voltage/current signals and pulse duration/frequency type analog input signals.
b. Input accuracy:
    1) Inputs must be read with an accuracy of within 0.05-percent full-scale or better.
    2) Data conversion errors must be less than 0.05-percent full-scale.
    3) Pulse accumulation error less than or equal to 1 count of actual input count at a scan rate of once per minute.
    4) Maintain for a minimum of 1 year the system accuracy stated above without adjustments.
c. Blocking:
    1) Provide mechanisms to inhibit or block the scanning and/or processing of any analog input through the operator interface.
    2) For any input so blocked, the operator may manually enter a value to be used as the input value.
d. Filtering:
    1) For each analog input, provide a first order lag digital filter with an adjustable filter factor.
e. Linearizing:
    1) Where analog inputs require square root extraction or other linearization, provide a mechanism to condition the filtered data before the process of scaling and zero suppression takes place.
f. Calculated values:
    1) Provide means to allow for pseudo-inputs calculated by algebraic and/or Boolean expressions utilizing real inputs, other calculated values, constants, etc.
    2) These values must be handled the same as real inputs in terms of record-keeping, alarming, etc.
g. Scaling and zero suppression:
    1) Provide a conversion program to convert input values into engineering units in a floating-point format.
h. Alarms:
    1) Provide an alarm program to check all analog variables against high-high, high, low, and low-low alarm limits.
    2) When an analog value exceeds a set limit, it must be reported as an alarm based on individually set priority level for each alarm point.
    3) Provide an adjustable hysteresis band in order to prevent excessive alarms when a variable is hovering around an alarm limit.
    4) Must be possible to inhibit alarms based on external events, e.g., lock-out low pump flow alarm when the pump is off.
i. Averages:
    1) Provide a program to calculate and store hourly, daily, and monthly averages of analog variables.
    2) Continuously compute averages, e.g., the average for the current period to the present point in time must be stored in memory and available for use in displays, etc.
    3) Update hourly averages each minute or at the polling interval for the selected variable.
    4) Update daily averages at least once each hour and calculate using the results of the hourly averages.
    5) Update monthly averages at least once each day and calculate using the results of the daily averages.

6) At the end of each averaging period, store the average values for the period on the hard disk for historical record-keeping and reset the present period average register to the present value of the variable.
7) The active database must include the present period average and previous period average for each variable and averaging period.

j. Totals:
1) Provide a program to calculate and store hourly, daily, and monthly totalization of analog variables.
2) Assign a scaling factor to each variable to convert to the appropriate units based on a 1-minute totalizing interval.
3) Assign a separate factor for each totalizing interval.
4) Variables for which totalization is inappropriate must have scaling factors of zero.
5) At the end of each totalizing period, store the totalized values for the period on the hard disk for historical record-keeping and reset the present period totalization register to zero.
6) The active database must include the present period total and previous period total for each variable and totalizing period.

k. Engineering units:
1) Provide software to allow the system and the operator to convert all the measured analog variables to any desired engineering units.
2) The operator must be able to view displays and generate reports of any measured variable in one or more engineering units such as flow in gpm, mgd, cfs, and acre-feet per day.
3) Pre-program the conversion of the engineering units, and, if not pre-programmed, the operator must be able to program new engineering unit conversions by using simple methods, e.g., multiplication of the database attributes by a constant.
4) The programming method must be at a level and compatible with the specified training of the operator and the Owner's personnel.
5) New conversions must not require the services of a special programmer and/or special, high-level, programming training.

l. Control modules:
1) For each control function configured, whether processed at the RTU, PLC, or operator interface, maintain a file of necessary data including input values, setpoints, constants, intermediate calculated values, output value and limit clamps, etc.
2) Input and output assignments, setpoints, and constants must be adjustable by the operator through the operator interface.
3) Provide control algorithms for manual control with output values adjustable by the operator.

m. Analog outputs:
1) Analog outputs must be maintained as part of the database.
2) These outputs must be adjustable manually by the operator through the operator interface or through automatic control algorithms.

18. Some of the above functions may be better accomplished in the data acquisition and graphic display software package; it is the responsibility of the ICSC to optimize the location of the various functions between all software packages.

C. General control functions:
1. Analog control functions:
a. PID, lead/lag, signal select, alarm, limit, delay, and time base.
b. Furnish the control system complete with a library of mathematical/calculation software to support averaging, weighted average, addition, subtraction, multiplication, division, square root extraction, exponential, AND, OR, NAND, NOR, XOR, and NXOR functions.

c. All math utilities must be linkable to process data points or manual inputs via control block configuration.
d. By linking control blocks to data points, the math library must support system unit conversion and calculation requirements.

2. Discrete control functions:
   a. AND, OR, NOT, EXCLUSIVE OR, comparators, delays, and time base.
3. Software support:
   a. Retain in firmware all control and logic functions at each RTU and PLC and in RAM at the operator interface.
   b. Call each function as required by the configured controls to perform the intended function.
4. Control and status discrepancies:
   a. Generate a discrepancy/fail alarm for any pump, valve, or final control element if a discrepancy exists between a system or operator command and the device status.
      1) For example, the system commands to start (call), and the pump fails to start (run status report back), within predetermined operator-programmable time delay (time disagree), then a discrepancy (fail) alarm shall be generated.
   b. Involuntary change in the device's status must also generate an alarm:
      1) For example, a pump starts when not commanded to do so, or a pump shuts down while running even though it still has a command to run.
   c. Each command, status, and alarm must cause the color of the symbol to change.
   d. Because many discrete final control elements have a cycle time in excess of the scan interval, provide each control output with an associated delay period selected to be longer than the operating period of the control element:
      1) Delay periods for each final control element must be adjustable at the operator interface.
      2) List all time delays in the final documentation.
5. Some of the above functions may be better accomplished in the data acquisition and graphic display software package; it is the responsibility of the ICSC to optimize the location of the various functions between all software packages.

D. Control configuration:
1. Provide software to allow control strategies to be developed, and their operation initiated through the operator interface.
2. Provide standardized control point displays for defining the control functions including the function type, input/output addresses, setpoints, tuning constants, etc.
3. Provide a mechanism to link separate control functions together into an integrated control strategy.
4. Provide a mechanism to download operational/control setpoints developed at any operator interface to any PLC or RTU for operational implementation.
5. Provide a mechanism to define and implement operational/control setpoints locally at the PLC or RTU, and to upload them to the operator interface for operational record-keeping.
6. Perform control configurations on-line at the operator interface; the PLC or RTU may be taken off-line when being configured or downloaded.

2.5 EQUIPMENT (NOT USED)

2.6 COMPONENTS (NOT USED)

2.7 ACCESSORIES (NOT USED)

2.8 MIXES (NOT USED)

2.9 FABRICATION (NOT USED)

2.10 FINISHES (NOT USED)

2.11 SOURCE QUALITY CONTROL

A. As specified in the Common Work Results for Process Control and Instrumentation Systems Section.

PART 3 EXECUTION

3.1 EXAMINATION (NOT USED)

3.2 PREPARATION (NOT USED)

3.3 INSTALLATION

A. As specified in the Common Work Results for Process Control and Instrumentation Systems Section.

B. Utilize personnel to accomplish or supervise the physical installation of all elements, components, accessories, or assemblies:
   1. Employ installers who are skilled and experienced in the installation and connection of all elements, components, accessories, and assemblies.

C. All components of the control system including all data network cables are the installation responsibility of the ICSC unless specifically noted otherwise.

D. General:
   1. The control system logic program shall reside at the PLC level.

E. Use the tag and loop identifications found on the P&IDs for all tags used and/or assigned as part of the application software work provided by the ICSC.

F. Program the PLC logic using the following language(s):
   1. Ladder Diagram.

3.4 ERECTION, INSTALLATION, APPLICATION, CONSTRUCTION

A. Provide a minimum of 4 CD/DVD copies of the following:
   1. Application software:
      a. Finalized fully annotated copy of programmed PLC logic in its native format.
      b. Cross-referenced index of all PLC registers or points.

3.5 REPAIR/RESTORATION (NOT USED)

3.6 RE-INSTALLATION (NOT USED)

3.7 FIELD QUALITY CONTROL

A. As specified in the Common Work Results for Process Control and Instrumentation Systems Section.

3.8 ADJUSTING (NOT USED)

3.9 CLEANING

A. As specified in the Common Work Results for Process Control and Instrumentation Systems Section.

3.10 DEMONSTRATION AND TRAINING

A. As specified in the Common Work Results for Process Control and Instrumentation Systems Section.

B. Tailor training specifically for this Project that reflects the entire control system installation and configuration.

C. Perform training by pre-approved and qualified representatives of the ICSC and/or manufacturer of the PLC hardware and programming software:
   1. A representative of the ICSC may perform the PLC hardware training only if the representative has completed the manufacturer's training course for the PLC hardware.
   2. A representative of the ICSC may perform the PLC programming software training only if the representative has completed the manufacturer's training course for the PLC programming software.

3.11 PROTECTION

A. As specified in the Common Work Results for Process Control and Instrumentation Systems Section.

3.12 SCHEDULES (NOT USED)

END OF SECTION

THIS PAGE INTENTIONALLY LEFT BLANK FOR DOUBLE SIDED PRINTING

SECTION 277330

CONTROL SYSTEMS: NETWORK MATERIALS AND EQUIPMENT

PART 1 GENERAL

1.1 SUMMARY

A. Section includes:
   1. Materials and equipment used in process control and LAN networks including:
      a. Network switches.
      b. Media converters.
      c. Routers.
      d. Patch panels and other data network hardware.
      e. Related accessories.

1.2 REFERENCES

A. As specified in the Common Work Results for Process Control and Instrumentation Systems Section.

B. Institute of Electrical and Electronics Engineers (IEEE):
   1. 802.1X – Standard for Local and Metropolitan Area Networks—Port-Based Network Access Control.
   2. 802.3 - Standard for Ethernet.
   3. 802.3ab - Standard for Information Technology - Telecommunications and information exchange between systems - Local and Metropolitan Area Networks - Part 3: Carrier Sense Multiple Access with Collision Detection (CSMA/CD) Access Method and Physical Layer Specifications - Physical Layer Parameters and Specifications for 1000 Mb/s Operation over 4 pair of Category 5 Balanced Copper Cabling, Type 1000BASE-T.
   4. 802.3u - Standards for Local and Metropolitan Area Networks: Supplement - Media Access Control (MAC) Parameters, Physical Layer, Medium Attachment Units, and Repeater for 100Mb/s Operation, Type 100BASE-T (Clauses 21-30).
   5. 802.11b - Standard for Information Technology - Telecommunications and information exchange between systems - Local and Metropolitan networks - Specific requirements - Part 11: Wireless LAN Medium Access Control (MAC) and Physical Layer (PHY) specifications: Higher Speed Physical Layer (PHY) Extension in the 2.4 GHz band.

C. Telecommunications Industry Association/Electronics Industry Association (TIA/EIA):
   1. 568-C.3 - Optical Fiber Cabling Components Standard.

D. Underwriters Laboratories, Inc. (UL).

1.3 DEFINITIONS

A. As specified in the Common Work Results for Process Control and Instrumentation Systems Section.

1.4 SUBMITTALS

A. Furnish submittals as specified in the Common Work Results for Process Control and Instrumentation Systems Section.

B. Product data:
   1. Include information on all network equipment.
   2. Manufacturer’s operation and installation instructions.

C. Shop drawings:
   1. Complete set of drawings including but not limited to:
      a. System block diagram showing relationship and connections between devices provided under this Contract. Include manufacturer and model information, and address settings.
      b. Network riser diagram.
      c. Network port diagram, which physically locates all ports within the facility, and identifies their patch panel and switch port.
      d. Construction drawings for all equipment cabinets, including dimensions, identification of all components, preparation and finish data, and nameplates.
      e. Electrical connection diagrams.
      f. Complete grounding requirements.
   2. Furnish data sheets for each component together with a technical product brochure or bulletin:
      a. Manufacturer's model number.
      b. Project equipment tag.
   3. Complete and detailed bills of materials broken up by each cabinet. Each bill of material item will include the following:
      a. Quantity.
      b. Description.
      c. Manufacturer.
      d. Part numbers.

D. Test reports:
   1. As specified in Sections:
      a. 17950 - Commissioning for Instrumentation and Controls.
   2. Signed test results as described in this Section.
   3. Test results shall include:
      a. Narrative describing the test procedures followed.
      b. Block diagram of test set up.
      c. Manufacturer’s information on test equipment used.
      d. Detailed test results.
      e. A narrative summarizing the results of the testing and identifying any further action required.

E. Operating manuals:
   1. Complete installation, operation, calibration, and testing manuals as specified in Section 17050 - Common Work Results for Process Control and Instrumentation Systems.

F. Record drawings:
   1. As specified in the Common Work Results for Process Control and Instrumentation Systems Section.
   2. Electrical connection diagrams shall be revised to reflect any changes made in the field and submitted as record drawings.

1.5 QUALITY ASSURANCE

A. As specified in the Common Work Results for Process Control and Instrumentation Systems Section.

1.6 DELIVERY, STORAGE, AND HANDLING

A. As specified in the Common Work Results for Process Control and Instrumentation Systems Section.

1.7 PROJECT OR SITE CONDITIONS

A. As specified in the Common Work Results for Process Control and Instrumentation Systems Section.

1.8 SEQUENCING (NOT USED)

1.9 SCHEDULING (NOT USED)

1.10 WARRANTY

A. As specified in the Common Work Results for Process Control and Instrumentation Systems Section.

1.11 SYSTEM START-UP (NOT USED)

1.12 OWNER'S INSTRUCTIONS (NOT USED)

1.13 COMMISSIONING (NOT USED)

1.14 MAINTENANCE (NOT USED)

PART 2 PRODUCTS

2.1 MANUFACTURERS (NOT USED)

2.2 SYSTEM DESCRIPTION

A. Provide all network equipment identified in the Contract Documents.

2.3 EXISTING PRODUCTS (NOT USED)

2.4 MATERIALS (NOT USED)

2.5 MANUFACTURED UNITS

A. Ethernet switches:
   1. Managed Process Rack Mount Ethernet switches:
      a. Manufacturers: One of the following, no equal:
         1) Rockwell, Stratix 5410.
         2) Cisco, IE 5000.
         3) Redlion, NT24k.
         4) Hirshmann, MACH.
      b. Properties:
         1) Hardware:
            a) Power supply:
               (1) Provide redundant power supplies.
               (2) 24 VDC, 1,100 watts per power supply.

2) Performance:
   a) Switching capacity: 88 Gbps.
   b) Gigabit throughput.
   c) 10/100/1000Base-T RJ-45 Copper Ports (quantity as indicated on the Drawings).
   d) Ports will auto negotiate speed duplex and MDIX.
   e) Capable of performing basic switching without special programming or configurations. Additional features available through software setup includes but not limited to:
      (1) SNMP
      (2) VLAN.
      (3) QoS.
   f) IGMP Snooping with Ethernet I/P plug and play compatibility.
   g) 802.1d, 802.1w, 802.1D RSTP.
   h) Rapid Spanning Tree protocol.
3) Environment:
   a) Operating temperature range: 32 to 113 degrees Fahrenheit.
   b) Humidity: 5 to 95 percent, non-condensing.
   c) Elevation: Up to 10,000 feet.
4) Electrical:
   a) Maximum power consumption: 291 watts.
5) Connector type:
   a) Copper: RJ-45.
      (1) Quantity of copper and fiber ports as required to provide connections as indicated on the Drawings: As required to provide the number of connections required plus 20 percent spare ports of each type used.
6) Mounting:
   a) Provide hardware for hardware.
      (1) DIN Rail mounting.
      (2) As indicated on the Drawings.

2. Managed Process Floor Ethernet switches:
   a. Manufacturers: One of the following, no equal:
      1) Hirschmann, BRS-40.
      2) Red Lion, N-Tron, 7000.
      3) Rockwell, Stratix 5700.
      4) Cisco, IE2000.
   b. Properties:
      1) Hardware:
         a) Power supply:
            (1) Provide redundant power supplies.
            (2) 24 VDC, 170 watts per power supply.
         b) No fans or moving parts.
      2) Performance:
         a) Enclosure:
            (1) All metal housing.
            (2) 15g Shock for 11ms minimum.
         b) 10/100BASE-TX RJ-45 Copper Ports (quantity as indicated on the Drawings).
         c) 100BASE-FX SC or ST Fiber Duplex Ports (quantity as indicated on the Drawings).
         d) 1,000BASE-T RJ-45 Copper Ports (quantity as indicated on the Drawings).
         e) 1,000Base-SX LC Duplex Fiber Ports (quantity as indicated on the Drawings).

f) Capable of performing basic switching without special programming or configurations. Additional features available through software setup includes but not limited to:
(1) SNMP.
(2) VLAN.
(3) QoS.
(4) Port Mirroring.
(5) DHCP Server
g) IGMP Snooping with Ethernet I/P plug & play compatibility.
h) 802.1d, 802.1w, 802.1D RSTP.

3) Environment:
a) Operating temperature range: 32 to 140 Degrees Fahrenheit.
b) Humidity:10 to 95 percent, non-condensing.

4) Connector type:
a) Fiber: LC.
b) Copper: RJ-45:
(1) Quantity of copper and fiber ports as required to provide connections as indicated on the Drawings: As required to provide the number of connections required plus 20 percent spare ports of each type used.

5) Mounting:
a) DIN Rail mounting.

B. Media converters:
1. Copper to fiber transceiver:
a. Manufacturers: One of the following or equal:
1) N-Tron.
2) Transition Networks.
3) Phoenix Contact.
b. Transceiver shall be used to convert from Half/Full Duplex Ethernet to multimode fiber Ethernet 100BASE-FX:
1) Meets requirements of IEEE 802.3 Ethernet standard.
2) Supports Half/Full Duplex.
3) Connector type:
a) Fiber: SC.
b) Copper: RJ-45.
4) Power supply:
a) 110 VAC, 60 hertz.
b) 24 VDC, 6 watts.
5) Mounting:
a) Provide mounting hardware.
b) DIN rail mounting, unless otherwise indicated on the Drawings.
2. Modular media converter systems:
a. Manufacturers: The following or equal:
1) Transition Networks.
b. Use for the installation of multiple media converters into a standard 19-inch EIA rack.
c. Provide 19-slot chassis for the installation of media conversion modules.
d. Provide power supply to support media converter modules from 120 VAC power supply.
e. Provide mounting hardware for installation into standard electronic equipment rack.
f. Chassis height: 2U Rack Units.
g. Media converter module:
1) Port 1:

a) 100BASE-FX.
b) SC/LC.
2) Port 2:
a) 10/100BASE-TX.
b) RJ-45.
3) Power:
a) From main chassis.
4) Diagnostics:
a) Power Indicating LED.
b) Port Activity Indicating LED.

C. Patch panels:
1. General:
a. Fiber:
1) All optical fibers shall be provided with strain relief and terminated at a fiber patch panel. Final connections between the patch panel and the fiber optic network equipment shall be made via fiber optic patch cords.
2) All fibers, active and dark, shall be terminated at the patch panels.
3) Interconnect and patch panel housings shall provide space for excess fiber and provide strain relief for the fiber cable.
4) Fiber cables shall be installed such that the outer sheath of the cable is carried into the interconnect enclosure or patch panels before breaking out buffer tubes.
b. Copper:
1) Final connections between the patch panel and network equipment shall be by patch cords.
2) All premises cables shall be terminated at the patch panels.
3) Cables shall be installed such that the outer sheath of the cable is carried into the interconnect enclosure or patch panels before breaking out conductors.
4) Maintain twist of broken out conductors per EIA/TIA standards.
2. Rack mounted Copper Patch panels:
a. Manufacturers: One of the following or equal:
1) Hubbell Speedgain.
2) Siemon HD.
3) Lucent Systemax.
4) Panduit.
b. Copper patch panels and connectors shall meet the following (minimum) requirements:
1) Category 6.
2) RJ-45 patch cord termination:
a) Punch Down Block.
b) Performance tested modular jack, capable of being re-terminated up to 20 times.
3) Mounting: 19-inch rack mount.
4) UL listed and UL-C certified.
5) Support network line speeds in excess of 1 and 10 gigabit per second and be backward compatible with Category 5e cables.
6) Accessories:
a) Removable rear cable management bracket.
b) Rear individual port labels.
c) Front color coded individual port labels.
c. Provide copper patch cables as required to support all network devices.
d. Provide 4 spare straight through patch cables.
e. Provide 1 spare cross over cable.
3. Rack mounted fiber patch panels:

a. Manufacturers: One of the following or equal:
1) Panduit.
2) Corning cable systems.
b. Fiber patch panels shall meet the following (minimum) requirements:
1) Use for combination of splicing and termination of fiber-optic building cable or outside plant cables.
2) 1RU and 2RU height fully enclosed shelves.
3) Slide-out, tilt-down tray.
4) Interchangeable modules.
5) Accessories:
a) Hinged front doors.
b) Front cable management trough.
c) Top cover panel.
c. Modules for modular shelves shall meet the following (minimum) requirements:
1) Interchangeable modules available in LC for multimode and single mode solutions.
2) Adapters color coded per TIA/EIA 568C.3
4. Cabinet style fiber patch panels:
a. DIN rail mounted:
1) Use for the termination of a single cable inside of cabinets, in small enclosures or as indicated on the plans.
2) DIN rail mounted cable interconnects shall be provided as complete units including the housing, the connector panels and the fiber connectors.
3) DIN rail mounted cable interconnects shall provide physical protection for both the incoming cable and the outgoing patch cords.
4) Capacity:
a) As shown on the plans, minimum 6 connections.
5) Accessories:
a) Blanks for unused connector panels.
6) Manufacturers: One of the following or equal:
a) Hirschmann, MIPP.
b) DINSpace, SNAP XL.

D. Network racks:
1. Networking closed 4-post cabinets:
a. Manufacturers: One of the following or equal:
1) Rittal.
2) Hoffman.
3) Panduit.
b. Properties:
1) Integral keyboard and mouse drawer.
2) CPU cabinet with locking front door.
3) CRT cabinet with locking front door.
4) Louvered rear door.
5) Power strip.
6) Corded fan kit.
7) Furnish shelves as needed.
8) Furnish writing surface.
9) Furnish cable keeper/organizer.
10) NEMA 1.

E. [KVM Console with LCD:
1. Manufacturers: One of the following or equal:
a. Raritan.
b. APC; Schneider Electric.
c. Tripp-Lite NetCommander.

2. Properties:
    a. Operating System: Compatible with Windows, Linux, and all other major operating systems.
    b. Display: 19 inch.
    c. Resolution: 1920 by 1080 or 1,280 by 1,024.
    d. Keyboard: Full size keyboard with integrated number pad.
    e. Mouse: PS/2 and USB Compatible.
    f. Rack Height: 1U.
    g. Operating temperature: 0 to 40 degrees Celsius.
    h. Power consumption: Not to exceed 40 watts.
        1) Port count to match as indicated on the Drawings.]

2.6 EQUIPMENT (NOT USED)

2.7 COMPONENTS (NOT USED)

2.8 ACCESSORIES

A. Provide duplex patch cords to connect the interface cards provided with the associated patch panels.

B. Furnish accessories as specified in the Control Systems: PCS Computer Equipment Section.

2.9 MIXES (NOT USED)

2.10 FABRICATION (NOT USED)

2.11 FINISHES (NOT USED)

2.12 SOURCE QUALITY CONTROL (NOT USED)

PART 3 EXECUTION

3.1 EXAMINATION (NOT USED)

3.2 PREPARATION (NOT USED)

3.3 INSTALLATION

A. As specified in the Common Work Results for Process Control and Instrumentation Systems Section.

B. Provide installation and configuration for the managed Ethernet switches. Provide configuration of the Ethernet switch network for a complete, functioning plant control system as indicated on the Drawings and as specified in this Section:
    1. Refer to SCADA block diagrams for all new network connections.

C. All racks shall be level and plumb.

D. Install Velcro wrap on all cable bundles within the network rack/enclosure.

E. All cables and equipment shall be installed in strict conformance with the manufacturer’s recommendations:

1. Cables shall be installed avoiding sharp bends.
2. Install cable using lubricant designed for cable pulling.
3. Cable ties or other cable supports shall be installed without crimping the LAN cables.
4. Install LAN cables without splices.
5. Installed bend radii shall not exceed 4 times the cable diameter.
6. Terminated all pairs at the jack and the patch panel.

F. Install cables a minimum of 40 inches away from electrical motors and transformers.

G. Install cables a minimum of 12 inches away from fluorescent lighting.

H. Individual pairs will be untwisted less than 1/2-inch at termination points.

I. All cables and terminations shall be labeled with cable designations as specified in Section 16075 - Identification for Electrical Systems.

J. Each data port shall be individually labeled with its patch panel/switch port ID:
1. Labeling must be printed - no handwritten labels will be allowed.

K. At the completion of the wiring installation, provide the following documentation:
1. A plan-view of the premise(s) showing the jack numbering scheme.
2. A printed certification report for the entire wiring installation showing compliance with all EIA/TIA specifications for data cable.
3. Reports such as those generated by Fluke DSP cable certification equipment meet this requirement.
4. Each device with a unique IP address shall be individually labeled with its IP address. The labeling must be printed; handwritten labels will not be allowed.

3.4 ERECTION, INSTALLATION, APPLICATION, CONSTRUCTION (NOT USED)

3.5 REPAIR/RESTORATION (NOT USED)

3.6 RE-INSTALLATION (NOT USED)

3.7 FIELD QUALITY CONTROL (NOT USED)

3.8 ADJUSTING

A. Perform all firmware installations, configuration and other set up, as required, to place the network into proper operation.

3.9 CLEANING

A. As specified in the Common Work Results for Process Control and Instrumentation Systems Section.

3.10 DEMONSTRATION AND TRAINING

A. As specified in the Common Work Results for Process Control and Instrumentation Systems Section.

B. After completion of the cable system tests and before placing the system in operation, power up all devices installed on the LAN and verify communication between the devices.

C. Verify that all equipment is operable on the network simultaneously. Confirm that all network device communications settings are properly configured.

3.11 PROTECTION (NOT USED)

3.12 SCHEDULES (NOT USED)

END OF SECTION

SECTION 277331

COMPUTER SYSTEM HARDWARE

PART 1 GENERAL

1.1 SCOPE OF WORK

A. Each server, workstation, and laptop shall be backed up after completion of the 30-Day Test and shall be turned over to the Owner.

PART 2 PRODUCTS

2.1 GENERAL

A. The use of a manufacturer's name and model or catalog number is for the purpose of establishing the standard of quality and general configuration desired.

B. The System shall be designed and constructed to withstand the demands of real time process management and control.

C. All equipment furnished shall be designed and constructed so that in the event of power interruption, or temperatures exceed operational range, the systems specified hereunder shall go through an orderly shutdown with no loss of memory, and resume normal operation without manually resetting when power is restored.

D. All software licenses required to achieve the functionality described in the Specifications and Drawings shall be provided.

E. Provide the latest make/model of the equipment specified herein at time of purchase. The procedure for submitting and releasing the computers shall be as follows:

1. The System Integrator shall submit on equipment as part of the Hardware submittal.

2. The computers shall be reviewed to ensure that the requirements of the specifications are met. If necessary, the System Integrator shall resubmit in order to get the requirements specified herein approved.

2.2 LIGHT DEMAND SERVER

A. Light demand tower chassis server/workstation shall be suitable for running small database applications. Expected use is to be CPU and RAM intensive.

B. Processor: Intel Xeon, 4-core/8-thread (3.0GHz minimum) or 8-core/16-thread, (2.0 GHz minimum), 15M cache or greater, Hyper-threading. Motherboard shall have a second socket capable of accepting an equal processor.

C. Memory: 8GB or greater, ECC, RDIMM, Single Rank. Motherboard shall be capable of supporting multiple rank memory with additional channels for scalability.

D. Internal Drives

1. Operating System Drive: 250GB drive, 7.2K RPM, SAS/SATA, 6Gbps or greater, 3.5in, cabled.

2. Storage RAID 1 (Mirror), Two identical drives, 1TB or greater, 7.2K RPM, SAS/SATA, 6Gbps or greater, 3.5in, cabled.

E. Video Graphics capable of 1920x1080 resolution @ 60Hz, VGA/DVI output

F. Networking: Dual-port NIC capable of up to 1Gbps

G. Optical Drive: DVD+/- RW, SATA, Internal

H. I/O Ports: Minimum of six USB 2.0/3.0 ports

I. Peripherals

1. Generic USB 104 key Keyboard

2. Two-button USB optical mouse with scroll wheel

3. Monitor: 24-inch LCD flat-panel, capable of 1920x1080 resolution @ 60Hz with adjustable height stand

J. Power Supply: 500W minimum supplied by 120VAC/60Hz

K. Operating System: Latest release of Windows Server

L. Software

1. Backup Software

2. Document Reader/Editor (Microsoft Office)

3. PDF Reader

M. Typical Server

1. Dell PowerEdge T430 Tower Server

2. HPE ProLiant ML150 Gen9

2.3 PROGRAMMING LAPTOP

A. Portable laptop computer shall be suitable for running all programming software, and simulators necessary to develop the control system.

B. Processor: Intel Core i5/i7, Quad-core, 2.3GHz or greater, 6MB cache or greater.

C. Memory: DDR4, 4GB or greater.

D. Internal Drive: 256GB or greater SSD.

E. Video Graphics capable of 1920x1080 resolution @ 60Hz

F. Networking: Wireless 802.11AC Dual-Band, Ethernet port capable of up to 1Gbps.

G. Optical Drive: DVD+/- RW, Internal

H. I/O Ports: Minimum of four USB 2.0/3.0 ports

I. Interface devices: 15” Monitor with 1920x1080 resolution, 104 key Keyboard

J. Operating System: Latest release of Windows for desired programming software

2.4 LIGHT DUTY GRAPHIC PRINTERS

A. Multi-function printer capable of Print, Scan, Copy

B. Printing Technology: Laser (color)

C. Print Quality: 600 dpi (dots per inch) color

D. Media Type: Envelopes, Plain Paper, Labels

E. PC Connection Availability: USB 2.0, WiFi, Ethernet, Compatible Drivers

F. Monthly Duty Cycle: up to 30,000 pages per month

G. Printing Speed: up to 10 pages per minute

H. Typical Printer:

1. Dell Color Multi-functional Printer E525W
2. HP OfficeJet 3830 All-in-One Printer
3. Lexmark MS317dn

I. Supplies

1. Provide 1 box, minimum 500 sheets, of Laser Print Paper, 8 1/2" x 11", 24 Lb
2. Provide 2 spare toner cartridges of each color.

PART 3 EXECUTION

3.1 GENERAL

END OF SECTION

THIS PAGE INTENTIONALLY LEFT BLANK FOR DOUBLE SIDED PRINTING

SECTION 227332

HMI SYSTEM SOFTWARE

PART 1 GENERAL

1.1 SCOPE OF WORK

A. This Section describes the requirements for the Human Machine Interface (HMI) software.

PART 2 PRODUCTS

2.1 HUMAN MACHINE INTERFACE (HMI) SOFTWARE REQUIREMENTS

A. General Requirements

1. The HMI software shall be the latest version of one of the following packages and shall be compatible with the operating system supplied with the computers:

a. Proficy HMI/SCADA – iFIX by GE Fanuc.

b. InTouch by Wonderware.

c. GENESIS by ICONICS.

d. Vijeo Citect by Schneider Electric

e. VT SCADA by Trihedral

f. Or equal

2. The HMI software shall have a distributed, client/server system architecture based on OPC and Component Object Technology (COM). This architecture shall employ a local area network (LAN) as the method for communicating among stations, allowing 'client' nodes to be added to view the HMI graphics and data resident on 'server' nodes. The HMI software shall be capable of displaying data from and writing values directly to other nodes from the HMI SCADA server without the need to duplicate the data in the local HMI system.

3. In addition to the client/server networking described in Paragraph 2.01-A-2, the HMI software shall support the use of terminal services. The user shall be able to have multiple configurations (view-only, view, and configure) without the need to purchase or install separate configurations.

4. There shall be a redundant pair of SCADA servers responsible for the collection of data from the field devices and the distribution of all data to the HMI clients. Upon failure of the primary server the backup shall resume normal operations within 15 seconds without manual intervention. Means shall be provided to allow historical data and alarm log collection without interruption regardless of server switchover. The system shall have the ability for the primary node to come online and be

integrated into the system with no action required by the user, once it is available again. The primary and the backup SCADA server will support the following tasks:

a. The status of which node is the active server shall be provided to the graphics package (for use in dynamic connections for operator indication).

b. Real time Data synchronization – Any data which has been configured for animation or program execution purposes and which does not get updated from the process data, shall also be synchronized from the primary to backup.

c. Alarm Synchronization – The alarm queues and alarm acknowledgment information shall be synchronized between the primary and backup SCADA.

5. The HMI software shall support alarm synchronization between all server and client nodes. All HMI Client nodes shall display and update the master database held on the SCADA servers and shall display the same alarm information at the same time. It shall not be necessary to acknowledge any alarm at more than one HMI workstation. The system shall have the ability such that acknowledging an alarm at any workstation shall acknowledge that alarm at all workstations.

6. No HMI client shall communicate directly with the field devices. Data for client display nodes shall be collected from the currently online SCADA server. The runtime client nodes shall include full read/write and supervisory control capabilities. The number of client licenses shall be as shown on System Architecture Drawing.

7. The software shall be licensed to collect unlimited I/O points and have no licensing restrictions on the number of connected HMI clients. The software shall be licensed to provide an unlimited number of graphic displays and to allow an unlimited number of operator logins available.

8. The primary and backup I/O Servers shall be supplied with full development software installed whereas the clients shall be supplied with run-time or view packages. It shall be possible for personnel with adequate security clearance to perform all configuration tasks from the servers.

9. The software package shall include an I/O driver capable of performing all scanning of PLC data tables for transferring analog and discrete data to and from the PLC. Scan periods shall be adjustable to ensure that the PC/PLC communications is scanning at the fastest possible time increment, without data degradation. All communications between the PLCs and the operator interface software shall use the Local Area Network (LAN) directly.

10. The HMI software shall permit manual data entry through any of the terminals. This data shall consist of laboratory inputs and entering or changing such things as alarm limits, setpoints, or constants. Confirmation shall be required via the respective display prior to actual entry into the process memory. Data entry and confirmation shall be available without using a keyboard.

11. The HMI software shall provide an open architecture that allows interaction with other programs. It shall provide a mechanism for other programs to access

individual data elements and fields within the database in real time. File transfer mechanisms are not acceptable; the access shall be direct to the memory-resident databases held on the SCADA Servers.

12. The following shall be supported:

    a. ODBC. The HMI software shall support Open Database Connectivity (ODBC) for sharing data from its database to any other ODBC compliant database through SQL queries, via an ODBC dynamic-link library (DLL) driver for real-time data and alarm information. At a minimum the database shall support communication to Microsoft Access, SQL Server, and Oracle.

    b. OLE for Process Control (OPC). The HMI software shall be both an OPC client for communicating to any OPC complaint server as well as an OPC server to serve data to any OPC complaint client.

    c. Visual Basic for Applications (VBA). The HMI software shall have VBA embedded as part of the development environment. VBA support shall be used for pre built scripts & custom scripts. It shall also support search and replace and the ability to copy all forms modules and scripts from one object to the next.

    d. OCX or ActiveX. The HMI software shall support the ability to have any third party OCX (ActiveX control) placed into its container. All third party controls shall have the right to behave like any object created by the HMI software. The HMI software shall contain any bad or misbehaving OCX or ActiveX control and be able to shutdown the control without shutting down the graphic picture, system, or Node.

13. The HMI software shall support a minimum of 45,000 separate point identifiers (tags) with each tag name being a minimum of 30 characters long.

14. The HMI software shall support real-time SQL database connectivity.

B. Graphic Displays

1. The graphic display package shall provide a means of creating and displaying color object-oriented graphic displays that will be used by the operator to monitor and control the process. Real-time values being read from the field devices shall be capable of being displayed in a variety of user-configurable formats.

2. Graphic displays shall be standard Microsoft Windows files and shall be able to be stored on the system disk, a floppy diskette, virtual (RAM) disk or file server, based on user-entered selections. There shall be no limit (other than physical disk size) to the number of displays that can be developed and accessed on-line.

3. Support for displays larger than the size of the monitor shall be provided. If used, graphics should be dynamically re-sized or scroll bars shall be provided to allow the user to move to other areas of the display. Also, support for using Multi Display Screens for viewing graphics shall also be available without any complex configurations or with minimal programming.

4. The graphic display package shall be supplied with a library of common graphic objects and symbols that can readily be incorporated into operator displays.

5. If the HMI manufacturer offers a specialized water/wastewater package that includes unique symbols and functions to improve graphics development, the package shall be provided.

6. The graphic display package shall be capable of importing graphics from other drawing packages such as CorelDRAW and AutoCAD.

7. The graphic display package shall be capable of importing graphics from Microsoft Windows clipboard.

8. The graphic editor shall be menu driven, and contain standard geometric symbols such as lines, circles, rectangles, etc., making creation, modification and copying of graphics a simple task. The graphic editor shall be provided with "wizards" and other scripting functions to reduce screen development time.

9. Animation connections shall be constructed using an intuitive Point and Click interface for point configuration without additional user configuration.

10. The graphic editor shall have capability of multiple dynamics of differing type to be applied to the same object (e.g., a size dynamic, and a color dynamic both added to a rectangle).

11. A method shall be provided for allowing graphics objects or groups of objects to be re-used easily. It shall allow the developer to insert native language prompts that request appropriate tag or other animation information whenever the object or grouped object is reused in another graphic display. These objects, either single or grouped, shall be intelligent, Windows wizard-like objects, so that it is possible to have a single prompt request and substitution. A method shall be provided to update all these wizards used in the application if the Master object from the library is updated.

C. Trend System

1. Dynamic trend displays shall plot at least eight user selectable analog values in an x-y format, with each plot using a unique color. Trends shall be plottable using current or historical information, with the ability to trend backward or forward from that time reference using a single command. The user shall be able to request exact numeric values for any point in the trend by moving the mouse to the point in the graphic. The trend displays shall use shading to emphasize when a particular point crosses a reference value.

2. The trending system shall be capable of creating transparent trends so that real-time and historical data can be directly compared.

3. It shall be possible to display each trend pen with a different y-axis scale complete with engineering units.

4. It shall be possible to "zoom" in on data as highlighted by an operator selectable

window.

5. It shall be possible to export all trend information to a data file that is readily accessible from standard spreadsheet packages.

6. It shall be possible to display historical data, data from text files generated with standard spread sheet software packages, and SQL linked data from relational databases all on the same trend.

D. Database

1. The database development package shall include the ability to add tags that provide access and control of all PLC data by bit and register.

2. Various input/output hardware assignments, as well as processing functions, shall be assigned to named tags or “function blocks." Multiple tags can be tied together to perform more complex functions. As an alternative, the database may be built by browsing third party OPCServers, and selecting the required tags. It shall not be necessary to type or otherwise manually enter any part of the OPC tag or addressing information to build the database. The database building tool shall support the import of OPC Tag groups as a single action, as well as individual tags.

E. Alarm and Event System

1. The software package shall perform alarm monitoring of discrete and analog inputs/outputs. Alarms shall be capable of being assigned to one of three severity categories with each category producing a distinct sound via the System speaker.

2. In order to logically divide a process into smaller units, the system shall allow for named individual alarm areas to be defined. These alarm areas shall be definable on an individual tag level. All alarm areas shall be accessible by each tag.

3. The alarm condition shall be specified as a discrete input or output change of state, analog values above and below limits, high or low analog rate-of-changes as defined in the database, or failed communication link.

4. The System shall print a descriptive message with a time stamp and user ID on the alarm printer or to an alarm file whenever any of the following events occur:

   a. Alarm

   b. Alarm acknowledgment.

   c. Data entry into a tag.

   d. Restarting the HMI software.

F. Error Detection, Recovery, and Diagnostics

1. The software driver shall provide on-line diagnostics that display the current status and operation of the local area network and its nodes. The diagnostic display shall include the LAN adapter status for the machine showing the display, as well as the

current number of messages, errors and retries.

2. The HMI software shall automatically detect and recover from any network condition or software problem that results in a failure of communications between the HMI client and the SCADA server(s) or between the SCADA server and I/O devices. It shall be possible to log all connection/disconnection events of sessions between the SCADA server and clients.

3. If network communications errors are detected, the software shall automatically indicate that the data (on graphic displays, in historical files, etc.) is no longer valid and shall replace the invalid data with user defined characters or pre-defined status text. The HMI software shall automatically attempt to re-establish communications, and, if successful, shall then replace the characters with valid data. This capability shall be built-in to the software and shall not require any user programming or other user-dependent actions to implement.

G. Print Facilities

1. The operator interface software shall support at least one alarm/event printer and one report printer. Printers shall support both USB and/or parallel ports for printing.

H. Historical Data

1. The System shall provide for archival of all historical data. Data shall be archived for long-term storage and retrieval. The long-term historical data to be archived shall be stored in an OBDC compliant file format to facilitate access to operator activity, system events, alarm messages, and point values using relational-database compatible software for data analysis, reporting and archiving. Short- term historical data (less than 90 days) may be stored in a format readily accessible to the HMI software.

2. The system shall be capable of logging all system activity such as command and macro usage, operator comments, system errors, system messages, and communication network errors, if selected by the operator/system administrator.

3. The System shall provide for automatic purging of short-term historical data files.

4. Data Quality: Data Quality flags shall be provided to indicate the quality of all data points stored in any data archive.

5. Manual Input Data Handling: This data shall consist of additional values not obtainable by the SCADA system such as laboratory analysis for use in reports. All manually entered data shall be entered and stored in the appropriate engineering units.

I. Security

1. The HMI software shall provide a minimum of four levels of security to prevent unauthorized usage or modification of the system.

2. Operator interface functions such as commands, macros, graphic displays, OLE

objects, and point IDs shall be capable of each being assigned a separate security level.

3. After a predetermined time of no operator activity, which is adjustable by the system administrator, the operator workstation shall default to the lowest system security.

4. The software package shall provide the ability to "lock" a user into the runtime graphics environment. Specifically, disabling any combination of the following shall be supported:

   a. Starting other applications.

   b. Switching to other applications that may be running.

   c. Exiting from the software package.

   d. Keystrokes (i.e. <Ctrl><Alt><Delete>, <Alt><Tab>)

   e. Switching to graphics configuration mode.

J. I/O Device Communications

1. A software driver shall be supplied to communicate with every type of device shown on the systems architecture drawings. The communications driver shall be configurable on-line.

2. The use of Microsoft OPC 2.0 or later shall be supported. The OPC Server shall have the capability to be used for PLC communication.

3. The device communications program shall perform error checking on messages such as lost response (time-out) and data error (checksum, LRC, CRC, etc.). If communications errors are detected, the software shall automatically indicate that the data (on graphic displays, in historical files, etc.) is no longer valid. The invalid data shall be replaced with user-defined characters or pre-defined text. The HMI software shall automatically attempt to re-establish communications, and, if successful, shall then replace the characters with valid data. These capabilities shall be built-in to the software and shall not require any user programming or other actions to implement. Failover to a user-configurable back-up port shall be provided as a function of the driver.

4. The software driver shall include a diagnostic program capable of running on-line or off-line that can monitor message rates from the communication program. The diagnostic program shall display the number of new messages, retries, time-outs, any occurrences of error, and the specific error code.

2.2 ALARM DIALERS

A. Software Alarm Dialers

1. General: The software shall be capable of being used with pagers, cell phones, landline phones and most wireless communications. The software shall

communicate directly with the SCADA database. It shall be able to communicate with the HMI software specified in Section 2.01. It shall come equipped with security options.

2. Function: The software shall provide real-time alarm notification over speakers, intercom systems, email, pagers and telephones.

3. Manufacturer: The software shall be the latest version of the following:

   a. WIN-911 software by Specter Instruments.

   b. AlarmWorX-MMX software by ICONICS.

   c. SCADAlarm software by Wonderware.

   d. Or equal

4. Physical Hardware: The software shall be accompanied by a compatible modem, as recommended by the manufacturer, to allow the software and computer to dial pagers and phone systems.

2.3 SCADA HISTORIAN SOFTWARE

A. General

1. SCADA Historian software shall be a separate software package from the HMI. It shall run on a server as shown on the System Architecture Drawing.

2. SCADA Historian software shall store time series data.

3. Use of the SCADA Historian to serve data to HMI client trend screens shall be acceptable if this is a native feature of the SCADA Historian.

4. The Historian software shall be licensed to collect at least 500 I/O points and have at least 5 connected HMI clients. If redundant SCADA servers are used, the historian shall be capable of collecting data from either server in the event of a server failure. Any additional licensing required to provide support for redundancy shall be provided.

B. Data Storage

1. Data shall be directly stored in a standard enterprise database management system (DBMS). Data must be directly stored in the DBMS, i.e., not passed through systems such as Microsoft Access and linked via ODBC or other mechanism into the DBMS. To insure stable operation of the network, the architecture shall incorporate native utilization of the enterprise database platform including stored procedures, triggers, and tuned indexes will allow for your facility.

2. The DBMS shall feature high-speed data collection and retrieval, precise time stamp resolution, and multiple time zone support.

3. The DBMS shall have a fault-tolerant architecture including the ability to ‘store and

forward' and automatically reconnect.

4. Where redundant historical servers are included in the project design, all software licenses shall be included to provide full redundant functionality for those servers.

5. Historian software shall be the latest version of the following:

   a. Proficy Historian by GE Fanuc.

   b. IndustrialSQL by Wonderware.

   c. PI Historian System by OSIsoft

   d. Or equal

2.4 REPORTING SOFTWARE

A. General

1. Reporting software shall be a separate software package from the HMI. It shall run on a server as shown on the drawings.

2. Reporting software shall be licensed to allow at least two concurrent users and development for at least ten report templates.

3. Additional licenses, if required for the reporting package, shall be provided to include support for the selected HMI software.

4. Reporting software shall be provided with a minimum of 1 year of support from the manufacturer.

B. Reports

1. The process report generation software shall provide the means to process and store data for historical records. Software shall be flexible so that contents of the reports can be easily modified. The software shall provide for collecting, processing and storing values.

2. Reporting software shall be the latest version of the following:

   a. OPS SQL by OPS Systems.

   b. ReportWorX by ICONICS.

   c. XLReporter by SyTech.

   d. Operator10 by AllMax

   e. Or equal.

3. An interface shall be provided to the HMI software/SCADA Historian provided in 2.01 and 2.03 of this Specification for automatic collection of daily/hourly/15

minute/one minute summarized data from historical file. Interfaces shall run with no user intervention and shall be able to be run as an NT Service.

4. The following data collection functions shall be provided:

   a. The instantaneous values may be collected based on the change value of the data point.

   b. The instantaneous values shall be averaged every 15 minutes. For some state reports, this 15-minute data will be retained.

   c. The 15 minute averages shall be maintained for 72 hours.

   d. The 15 minute averages shall be reduced to hourly averages and maintained for 60 days.

   e. The hourly averages shall be reduced to daily averages and maintained for 18 months.

5. For each 24-hour period, the maximum and minimum values and totalized value for flow signals shall be maintained for 18 months.

6. All averages shall have the capability of being archived to removable media.

7. Capability shall be provided to obtain log information on demand for screen display and archival to removable media.

8. The reporting software shall be able to interface with the HMI Software and SCADA Historian Software and shall be compatible with the operating system supplied with the computers.

9. A calculation extension capability shall be provided to perform calculations on data that have been accumulated for report generation. Calculations shall include:

   a. Standard operators (+,-,*,/).

   b. Functions (abs, retrieve forward or backward any day, exponential and logs, reciprocal, round, if-then-else, averages, and summations for daily, moving, weekly, monthly, and fiscal periods).

   c. Difference (with specified rollover or without).

C. Calculations shall provide the capability to calculate loadings, percent removals, MCRT, and CT at a minimum. Results can be calculated daily, hourly, or minutely. These calculated data values shall be stored in the database, thus ensuring the consistency of the data and allowing the same data to be readily available for analysis. Historical equations shall allow definitions of the calculation by date.

1. The reporting system shall generate reports from process and operation data stored in historical files or a database. The reporting software shall retrieve these data upon specifying a time period.

2. The date and time configuration shall be developed to meet the facility requirements. For example, a “day range” may start at 7:00:00 AM and end at 6:59:59 AM instead of midnight.

3. Reports shall be capable of being initiated automatically based upon time of day, month and year, or by event trigger. Reports shall also be capable of being generated manually upon operator’(s) request.

4. When the reports are generated manually, the reporting system shall be able to interface with the operator(s) through the HMI software to generate the needed reports. The operator interface should prompt the user to enter a day, a month and a year to retrieve the data.

5. User interface displays shall allow the operator to define the destination of the report (e.g., display, printer, computer file, email, etc.) and when it is to be printed (e.g., immediately, on demand, or automatically at a specified time).

6. The reporting system shall start automatically when re-starting the workstation to ensure data is not lost during power fail or system fail.

7. The reporting system shall include several security settings that will give permissions to develop and modify data while limiting unauthorized access to data monitoring and/or data entry.

8. It shall be possible to print data quality tags alongside the value.

PART 3 EXECUTION

END OF SECTION

THIS PAGE INTENTIONALLY LEFT BLANK FOR DOUBLE SIDED PRINTING

SECTION 279500

COMMISSIONING FOR INSTRUMENTATION AND CONTROLS

PART 1 GENERAL

1.1 SUMMARY

A. Section includes:
1. Testing requirements that apply to process control and instrumentation systems for the entire Project.

1.2 REFERENCES

A. As specified in the Common Work Results for Process Control and Instrumentation Systems Section.

B. Electronics Industries Alliance (EIA).

C. Telecommunications Industry Association (TIA).

1.3 DEFINITIONS

A. As specified in the Commissioning Section and the Common Work Results for Process Control and Instrumentation Systems Section.

B. Specific definitions:
1. Complete End-to-End Testing (CEET) - Signals are tested from the field device through the PLC program, the network, and all the way to the operator's HMI graphic screens.
2. Loop Validation Tests - Signals are tested from the field device to the PLC.
3. Platform Testing: Testing of the PLC and SCADA/HMI at the manufacturer's shop to demonstrate the program's functionality based upon specified and designed control requirements.
4. PTO: Profibus Trade Organization.

1.4 SYSTEM DESCRIPTION (NOT USED)

1.5 SUBMITTALS

A. General:
1. Reference additional detailed test submittal scheduling and prerequisite requirements as specified in the Sequencing article of the Common Work Results for Process Control and Instrumentation Systems Section.

B. Overall test plan:
1. Develop the PCIS system test submittals in consultation and cooperation with all applicable subcontractors.
2. Develop and submit an overall testing plan for the PCIS. The overall test plan to be reviewed and approved by the Engineer before detailed test plans, procedures, and forms will be reviewed.
3. Describe the test phases as they apply specifically to this Project and each process system.

4. Provide a preliminary testing schedule to show the sequence of tests and commissioning as they apply to each process system and each PLC.
5. Provide a description of factory tests. Describe what equipment will be included, what testing equipment will be used, and the simulator that will be used.
6. Provide examples of proposed forms and checklists.

C. Test procedures:
1. Develop and submit detailed test procedures to show that the integrated SCADA system hardware and software is fully operational and in compliance with the requirements specified in the Contract Documents.
2. Provide a statement of test objectives for each test.
3. Prepare specific procedures for each process system.
4. Describe sequentially the steps to be followed in verifying the correct operation of each process system, including all features described in the loop descriptions, control strategies, and shown in the P&IDs. Implied or generic test procedures are not acceptable.
5. Specify who will perform the tests, specifically what testing equipment will be used (including serial numbers and NIST-traceable calibration), and how the testing equipment will be used.
6. Describe the expected role of the Engineer, as well as any requirements for assistance from Owner's staff.
7. Provide the forms and checklists to be used.

D. Test forms:
1. Submit completed calibration forms, test forms, and checklists.
    a. Test forms shall include the detailed test procedures, or shall include clear references to separate pages containing the complete test procedure applicable to each form. If references to procedures are used, the complete procedure shall be included with each test binder.
    b. Every page of each test form shall include project name, date, time, name of person conducting the test, signature of person conducting the test, and for witnessed tests, place for signature of person (Engineer and Owner) witnessing the test.
    c. Sample test forms at the end of this Section show the minimum required content.
        1) The sample test forms have not been customized for this Project.
        2) Contractor shall develop and submit test forms customized for the Project and meeting the specified test and submittal requirements.

E. FAT procedure additional minimal requirements:
1. Prepare and submit a FAT procedure which includes:
    a. Control system testing block diagram.
    b. Estimated test duration.

F. Details on the simulator construction, components, and operation. Testing binders:
1. Sub-system to be tested, provide and submit a test binder containing all test procedures and individual test forms for the test. References to other documents for test procedures and requirements are not acceptable.
2. Fill out in advance headings and all other information known before the test.
3. Include applicable test plan information, as well as a list of all test prerequisites, test personnel, and equipment.
4. Include or list reference material and provide separately at the time of the test.
5. Record test results and verify that all test requirements and conditions have been met.

G. Test reports:
1. At the conclusion of each test, submit a complete test report, including all test results and certifications.

2. Include all completed test binders, forms, and checklists.
3. Submission, review, and acceptance of each test report is required before the start of the sub-system.

1.6 QUALITY ASSURANCE

A. Test personnel:
1. Furnish qualified technical personnel to perform all calibration, testing, and verification. The test personnel are required to be familiar with this Project and the equipment, software, and systems before being assigned to the test program.

1.7 DELIVERY, STORAGE, AND HANDLING (NOT USED)

1.8 PROJECT OR SITE CONDITIONS (NOT USED)

1.9 SEQUENCING (NOT USED)

1.10 SCHEDULING

A. As specified in the Common Work Results for Process Control and Instrumentation Systems Section.

1.11 WARRANTY (NOT USED)

1.12 SYSTEM START-UP (NOT USED)

1.13 OWNER'S INSTRUCTIONS (NOT USED)

1.14 MAINTENANCE (NOT USED)

PART 2 PRODUCTS (NOT USED)

PART 3 EXECUTION

3.1 EXAMINATION (NOT USED)

3.2 PREPARATION (NOT USED)

3.3 INSTALLATION

A. As specified in the Common Work Results for Process Control and Instrumentation Systems Section.

B. Installation supervision:
1. Provide as specified in the Common Work Results for Process Control and Instrumentation Systems Section.

3.4 ERECTION, INSTALLATION, APPLICATION, CONSTRUCTION (NOT USED)

3.5 REPAIR/RESTORATION (NOT USED)

3.6 COMMISSIONING

A. Testing and training phase:
   1. Source testing:
      a. Preliminary FAT (Pre-FAT):
         1) The purpose of the Pre-FAT is to provide assurance that the HMI/SCADA system is ready for the full, witnessed FAT, in terms of both stability and functionality.
            a) Debugging of software and troubleshooting of hardware shall occur during and before the pre-FAT, not during the FAT.
            b) Contractor shall fully test the HMI/SCADA system and fix all deficiencies found before the FAT.
         2) Conduct utilizing test procedures approved by Engineer
         3) Owner shall have the right to witness any or all of the Pre-FAT testing and shall be notified in writing 20 days before the start of the pre-FAT.
         4) Submit a letter, signed by the Contractor's project manager or company officer, certifying that integrated system hardware and software has been tested and confirmed to be fully operational and in compliance with the requirements specified in the Contract Documents and is fully ready for the full, witnessed FAT.
            a) Attach the completed pre-FAT test forms, signed by the Contractor's staff.
         5) Engineer approval of the pre-FAT submittal is required before proceeding to FAT.
      b. FAT hardware and communications testing:
         1) Perform tests to show that the integrated system hardware and software is fully operational and in compliance with the requirements specified in the Contract Documents.
         2) The complete PCIS system including operator stations, servers, network equipment, printers, PCMs, PLCs, RTUs, LCPs, CCS, peripherals, communications equipment, and other HMI/SCADA equipment, shall be assembled, connected, and software loaded for a fully functional FAT of the integrated system.
         3) Testing simulation:
            a) Inputs and outputs shall be simulated and proper control and system operation shall be validated.
            b) FAT shall make use of simulators that contain switches, pilot lights, variable analog signal generators, and analog signal level displays, which shall be connected to the I/O points within the HMI/SCADA system.
               (1) The use of jumper wires, terminal block mounted pilot lights, and loose meters to act as or supply the functionality of a simulator shall not be allowed.
               (2) The simulator may consist of a PLC, operating under a HMI/SCADA software package, or other approved software that has its I/O points wired to PLC's I/O points.
               (3) Software operating on a PC may then act as the switches, pilot lights, variable analog signal generators, and analog signal level displays.
         4) Additional source tests are specified in other sections of the Instrumentation and Control Specifications.
         5) Owner shall have the right to witness any or all of the FAT testing and shall be notified in writing 20 days before the start of the FAT.
         6) Verify communications between the hardware and the programmer's software comply with specified requirements.

a) For systems that contain RTUs or remote communications with other devices, the complete communications system must be factory tested, including actual interfacing with telephone company equipment and/or the actual radios used for radio based telemetry systems.

7) Panel inspections:
   a) Inspection forms:
      (1) Provide panel inspection forms as part of the FAT procedures submittal.
      (2) A sample FAT control panel form has been provided at the end of this Section.
8) I/O test:
   a) Test methodology:
      (1) Discrete inputs:
         (a) Apply appropriate input from simulator at panel terminal, observe input card indicator, observe data value at each indicated data address, and observe data received at field wiring terminals or operator interface screen.
      (2) Discrete outputs:
         (a) Issue commands from operator interface screen or PLC, verify output card indicator light, and measure response at field wiring terminals or multimeter.
      (3) Analog inputs:
         (a) Apply appropriate analog input signal at panel terminals on simulator, observe data value at each indicated data address, and observe data properly received at field wiring terminals or operator interface screen.
         (b) Check each point at 0 percent, 50 percent, and 100 percent of scale.
      (4) Analog outputs:
         (a) Enter scaled values in the output buffer file, observe the output data file value, and measure appropriate response at field wiring terminals or multimeter.
         (b) Check each point at 0 percent, 50 percent, and 100 percent of scale.
   b) Test forms to include, but not be limited to the following data:
      (1) PLC and panel number.
      (2) I/O type.
      (3) I/O tag name.
      (4) Rack/slot/number of I/O point.
      (5) Check-off for correct response for each I/O point.
      (6) Comments field.
      (7) Initials of individual performing test.
      (8) Date test was performed.
      (9) Witness signature lines.
9) System configuration test:
   a) Demonstrate and test the setup and configuration of operator stations, servers, development stations, and peripherals.
   b) Demonstrate utility software and functions, such as virus protection, backup, optical drive burning, network monitoring, etc.
   c) Demonstrate the proper operation of peripheral hardware.
   d) Demonstrate general HMI/SCADA functions.
   e) Demonstrate proper operation of log-on and other security access functions.

f) Demonstrate the proper operation of all historical data storage, trend, display, backup, and report functions.
g) Test automatic fail over of redundant equipment.
h) Demonstrate the proper operation of the alarm display and acknowledgement functions.
i) Test forms:
(1) For each test, list the specification page and paragraph of the function demonstrated, and provide a description of the function.
(2) List the specific tests and steps to be conducted.
(3) For each function, list all of the different sub-functions or ways the function can be used, and provide a test check-off for each:
(a) Include signature and date lines.

c. FAT Platform Testing - Control logic test:
1) Verify the PLC, HMI and SCADA, provides monitoring and control functionality based upon specified and designed control requirements.
2) Testing requirements:
a) Demonstrate each function described in the Control Strategies.
b) Demonstrate in detail how each function operates under a variety of operating scenarios.
(1) Test to verify the application of each general control strategy function to each specific control strategy or loop description.
c) Demonstrate the proper operation of the programming and configuration for each control strategy or loop description.
(1) Test each strategy or loop description on a sentence by sentence and function by function basis.
(2) Loops with similar or identical logic must each be tested individually.
(3) Test the boundaries of each numeric operator input by entering values outside of the allowable range.
d) Demonstrate the proper operation of all digital communication links and networks.
(1) Verify each digital communication I/O point.
e) Failure testing: Demonstrate how the system responds to and recovers from abnormal conditions including, but not limited to: equipment failure, operator error, communications subsystem error, communications failures, simulated/forced software lockups, power failure (both utility power and power to HMI and/or SCADA hardware), process equipment failure, and high system loading conditions.
3) Test forms:
a) Submit completed test forms for each loop including but not limited to the fully revised and approved control strategy.
b) Identify the cause and effect as each I/O point is toggled through the simulator.
(1) Identify and track proper and/or improper operation of the loop.
c) Note any deficiencies or operational changes on the forms for correction and documentation:
(1) Include signature and date lines.

2. Installation testing:
a. Calibration:
1) Performed by Contractor and ICSC.
2) Calibrate and adjust all instruments, devices, valves, and systems, in conformance with the component manufacturer's instructions and as specified in these Contract Documents.

3) Replace either individually or within a system, defective elements that cannot achieve proper calibration or accuracy.
    a) Calibration for discrete devices:
        (1) Calibrate and adjust devices for reliable operation and to avoid nuisance tripping.
    b) Calibration for ultrasonic and radar level devices:
        (1) Provide Echo Transmission and signal quality on level transmitters including guided and unguided units.
            (a) Submit printout of the actual transmission and parameters.
        (2) Adjust mounting, as required, to obtain accurate readings.
        (3) Post mounting: Provide any additional calibration required by manufacturer.
    c) Calibrating analog transmitters:
        (1) Components having adjustable features are to be set accurately for the specific conditions and applications of this installation.
        (2) Test and verify that components and/or systems are within the specified limits of accuracy.
        (3) Calibration points:
            (a) Calibrate each analog instrument at 0 percent, 25 percent, 50 percent, 75 percent, and 100 percent of span, using test instruments with accuracies traceable to NIST.
        (4) Field verify calibration of instruments including units that have been factory-calibrated to determine whether any of the calibrations are in need of adjustment.
    d) Analyzer calibration:
        (1) Calibrate and test each analyzer system as a workable system after installation. Follow the testing procedures directed by the manufacturers' technical representatives.
        (2) Submit completed instrument calibration sheets for every field instrument and analyzer.
        (3) Calibration tags:
            (a) Attach a calibration and testing tag to each instrument, piece of equipment, or system.
            (b) Sign the tag when calibration is complete.
    e) Calibration for industrial networking test equipment:
    f) Submit calibration documentation.

b. Loop check:
    1) Performed by the Contractor.
    2) Cabling installed, terminated, and labeled.
    3) Perform continuity check of wiring to each field device through intermediate devices to field terminals in the cabinet.
    4) Complete loop check form for each device.
    5) Submit loop check test results before proceeding to the next step.

c. Loop validation tests:
    1) Performed by the Contractor, ICSC, and manufacturer's representative, working together, and witnessed by the Owner or Owner's representative.
    2) Perform tests on the signal from each field device through intermediate devices to the I/O module on the PLC.
        a) The PLC may or may not be connected to the network.

d. Complete End-to-End Testing (CEET):
    1) Performed by Contractor, ICSC, manufacturer's representative working together, with assistance from the OWNER or the inspection staff, as needed.
        a) The participants need to be dedicated full-time to CEET.

b) ICSC will provide staff to verify input signals at, and create output signals from, an HMI or Engineering Workstation.
c) Contractor and ICSC will be responsible for creating field signals and verifying proper operation of final control elements.

2) Prerequisites:
a) CEET cannot begin until the successful completion of the preceding tests:
(1) Calibration.
(2) Loop check.
(3) Loop validation tests.
(4) LAN cable post-testing.
(5) Industrial network testing.

3) Testing description:
a) This testing is to ensure all I/O signals operate to the intent of the design from the field device to the HMI and all other auxiliary controls and indicators in the PCS.
b) Connect PLC to the network to test signals from the field device through the PLC program, the network, and to the operator's HMI graphic screens. The outputs will be energized for a duration long enough to verify proper operation of the final control element.
c) SCADA screens:
(1) Test and record operator commands and signal readouts to each operator device where there is more than one operator interface point.
(2) For each signal, perform separate tests for SCADA computer screens, local operator interface (LOI) screens, and local control panels.
(3) Retest any loop following any necessary corrections.

4) Check control loops under simulated operating conditions by causing a range of input signals at the primary control elements and observing appropriate responses of the respective control and monitoring elements, final control elements, and the graphic displays associated with the HMI/SCADA system.
a) Use actual process inputs wherever available.
b) Issue commands from the HMI/SCADA system and verify proper responses of field devices.
(1) Test SCADA system inputs from field device to SCADA system operator workstations.
(a) Track responses through trend charts in the HMI/SCADA system.
(2) Test SCADA system outputs from SCADA operator workstations to field devices and equipment.

5) Discrete device testing:
a) Exercise each field device providing a discrete input to the HMI/SCADA system in the field and observe the proper operation shall be observed at the operator workstation:
(1) Test limit switches, set limits mechanically, and observe proper operation at the operator workstation.
(2) Exercise starters, relay contacts, switch contacts, and observe proper operation.
(3) Calibrate and test instruments supplying discrete inputs, and observe proper operation.
b) Test each device accepting a discrete output signal from the HMI/SCADA. Perform the appropriate operator action at the SCADA

operator stations (including LOIs, if present) and confirm the proper operation of the field device:

(1) Stroke valves through outputs from the HMI/SCADA system, and confirm proper directional operation. Confirm travel limits and any feedback signals to the HMI/SCADA system.

(2) Exercise motors starters from the HMI/SCADA system and verify proper operation through direct field observation.

(3) Exercise solenoids and other field devices from the HMI/SCADA system and verify proper operation through direct field observation.

6) Analog device testing:

a) Apply continuously variable up and down analog inputs to verify the proper operation and setting of discrete devices (signal trips, etc.).

b) Apply provisional settings on controllers and alarm setpoints.

7) Analog input:

a) Exercise each field device monitoring the analog signal, through the HMI/SCADA system.

(1) Apply simulated sensor inputs corresponding to 0 percent, 25 percent, 50 percent, 75 percent, and 100 percent of span for networks that incorporate analog elements, and monitor the resulting outputs to verify compliance to accuracy tolerance requirements.

8) Analog output:

a) Exercise each field device requiring an analog command signal, through the HMI/SCADA system.

(1) Vary the output from the PLC HMI/SCADA system and measure the end device position, speed, etc. to confirm the proper operation of the device for the supplied analog signal.

(2) Manually set the output from the HMI/SCADA screen at 0 percent, 25 percent, 50 percent, 75 percent, and 100 percent and measure the response at the final device and at any intermediate devices.

9) Submit completed test forms.

a) Discrete instrument input devices:

(1) Switch setting, contact action, and dead band.

(2) Valve position switches:

(a) Response in the PLC as the valve is stroked from the PLC.

(b) Field observed actual valve position, and valve indicator position as the valve is stroked from the PLC.

(3) Operator interface switches (control stations and other pilot devices) and associated response.

(4) Starter and drive auxiliary device contact response.

(5) Response of all other discrete inputs to the PLC.

(6) Test equipment used and associated serial numbers.

b) Discrete output devices:

(1) Observed response of field device to the discrete output from the PLC.

(2) Observe the proper operation of Open, Close, Start, Stop, On, Off, etc.

(3) Test equipment used and associated serial numbers.

c) Analog input devices:

(1) Calibration range.

(2) Calibration data: Input, output, and error at each test value.

(3) Analog input associated PLC register address.

(4) Value in PLC register at each test point.
(5) Value displayed at each operator interface station (local operator interface displays and SCADA workstations).
(6) Test equipment used and associated serial numbers.

d) Analog output devices:
(1) Calibration range.
(2) Test value at each test point.
(3) Analog output associated PLC register address.
(4) Control variable value at field device at each test point.
(5) Physical device response at each test point:
(a) Response to be actual valve position, or motor speed, etc.
(6) Test equipment used and associated serial numbers.

10) Failure testing:
a) Demonstrate how the system reacts and recovers from abnormal conditions including, but not limited to:
(1) Equipment failure.
(2) Communications sub-system error.
(3) Power failure.
(4) Process equipment failure.
(5) High system loading conditions.

3. Functional testing:
a. General:
1) Testing to demonstrate proper operation of systems with process equipment operating over full operating ranges under conditions as closely resembling actual operating conditions as possible.
2) Performed by Contractor, ICSC, manufacturer's representative together, with assistance from the OWNER or the inspection staff, as needed.
3) Additional tests are specified in other Instrumentation and Control Sections.
4) Follow approved detailed test procedures and check lists for Functional Test activities.

b. Control logic operational validation:
1) The purpose of control logic validation is to field test the operation of the complete control system, including all parts of the HMI/SCADA system, all control panels (including vendor control panels), all control circuits, all control stations, all monitored/controlled equipment, and final control elements.
2) Demonstrate control functionality shown on the P&IDs, control schematics, and other drawings, and specified in the loop descriptions, control strategies, Electrical Specifications, and Mechanical Equipment Specifications.
3) Test in detail on a function-by-function and sentence-by-sentence basis.
4) Thoroughly test hardware and software functions:
5) Including all hardwired and software control circuit interlocks and alarms.
6) Test final control elements, controlled equipment, control panels, and ancillary equipment under startup, shut down, and steady-state operating conditions to verify all logic and control is achieved.
7) Control logic validation tests to include, but not limited to: a repeat of all control logic tests from the FAT, modified and expanded to include all field instruments, control panels, circuits, and equipment.

c. Loop tuning:
1) Optimally tune all electronic control stations and software control logic incorporating proportional, integral, or derivative control. Apply control signal disturbances at various process variable levels and adjusting the gain, reset, or rate settings as required to achieve proper response.

2) Verify the transient stability of final control elements operating over the full range of operating conditions, by applying control signal disturbances, monitoring the amplitude and decay rate of control parameter oscillations and making necessary controller adjustments as required to eliminate excessive oscillatory amplitudes and decay rates. As a minimum, achieve 1/4-wave amplitude decay ratio damping (subsidence ratio of 4) under the full range of operating conditions.
3) If excessive oscillations or system instability occur, as determined by the Engineer, continue tuning and parameter adjustments, or develop and implement any additional control algorithms needed to achieve satisfactory control loop operation.
4) Functional validation sheets:
   a) Document each Functional test on an approved test form.
   b) Include on the form, functions which can be demonstrated on a loop-by-loop basis:
      (1) Loop number and P&ID number.
      (2) Control strategy, or reference to specification tested.
      (3) Test procedures: Where applicable, use the FAT function-by-function, sentence-by-sentence loop test checklist forms modified to meet the requirements of the Functional test. Otherwise, create new forms.
   c) For functions that cannot be demonstrated on a loop-by-loop basis (such as overall plant power failure), include on the test form a listing of the specific steps and tests to be conducted. Include with each test description the following information:
      (1) Specification page and paragraph of function demonstrated.
      (2) Description of function and/or text from specification.
      (3) Test procedures: use the FAT loop test checklist forms modified to meet the specific testing conditions of the Functional test.
5) Functional certification:
   a) Provide Manufacturer's Certificate of Installation and Functionality Compliance as specified in the Commissioning Section.
      (1) Including all test forms with test data entered, submitted to the Engineer with a clear and unequivocal statement that all Functional test requirements have been satisfied.

B. Process Start-up Phase:
   1. Process Start-up:
      a. ICSC shall be onsite to support Process Start-up activities and provide functional changes as required.
   2. Process Operation Period:
      a. ICSC shall be available to support Process Operational Period and provide functional changes as required.
   3. PCIS Optimization and Fine-Tuning:
      a. General:
         1) After the Process Operational Period, test PCIS system for additional 60 days as specified in this Section to identify issues and make corrections, as needed.
         2) This is part of the Work that must be completed as a condition of substantial completion and final completion for the entire Project.
         3) The complete PLC control and HMI/SCADA system must run continuously for the duration of the PCIS Optimization and Fine-Tuning.
         4) Test and use the entire process control system under standard operating conditions.
         5) Exercise all system functions.

6) Log failure, any system interruption and accompanying component, subsystem, or program failure including time of occurrence, duration of each failure, failure classification, and cause:
    a) Provide a competently trained technician or programmer on call for the Project Site during all normal working days and hours from the start of the PCIS Optimization and Fine-Tuning until final acceptance of the system.
        (1) Response time to the Project Site: 24 hours or less, for a major failure.

b. SCADA system testing:
    1) Exercise each system function, e.g., status report, alarms, logs, and displays several times at a minimum, and in a manner that approximates "normal" system operation.
    2) Failure of the HMI/SCADA system during testing shall be considered as indicating that the programs and operating system do not meet the requirements of the specifications.
        a) Corrective action is required before restarting the PCIS Optimization and Fine-Tuning.
    3) Only those components, sub-systems, and systems covered in this Section and supplied under this Contract shall be considered for this acceptance test. Problems and failures of other systems shall not be considered as part of this test, except as they display the capabilities of this system to detect failures.
    4) Failures:
        a) Classify failures as either major or minor:
            (1) Minor failure:
                (a) A small and non-critical component failure or software problem that can be corrected by the Owner's operators.
                (b) Log this occurrence but this is not a reason for stopping the test and is not grounds for non-acceptance.
                (c) Should the same or similar component failure occur repeatedly, this may be considered as grounds for non-acceptance.
                (d) Failure of one printer or operator station is considered a minor failure providing all functions can be provided by backup equipment, i.e., alternate printers and operator station, and repairs can be made and equipment returned to service within 3 working days.
            (2) Major failure:
                (a) Considered to have occurred when a component, subsystem, software control, or program fault causes a halt in or improper operation of the system and/or when a technician's work is required to make a repair or to re-initiate operation of the system.
                (b) Cause termination of the PCIS Optimization and Fine-Tuning.
                (c) Start a new acceptance test when the causes of a major failure have been corrected.
                (d) A failure is also considered major when failure of any control system that results in an overflow, underflow, overdose, or underdose condition occurs.
    5) Technician report:
        a) Each time a technician is required to respond to a system malfunction, they must complete a report, which includes details concerning the

nature of the complaint or malfunction and the resulting repair action required and taken.

b) If a malfunction occurs which clears itself or which the operator on duty is able to correct, no report is required or logged as specified above.

c) If a technician has performed work but no report is written, then a major failure is considered to have occurred.

d) Each report shall be submitted within 24 hours to the Engineer and the Owner, or its representative.

3.7 FIELD QUALITY CONTROL (NOT USED)

3.8 RE-INSTALLATION (NOT USED)

3.9 ADJUSTING (NOT USED)

3.10 CLEANING (NOT USED)

3.11 PROTECTION (NOT USED)

3.12 SCHEDULES

A. Example test forms:

1. Example test forms are attached at the end of this Section. They may be used as a starting point for the development of Project-specific test forms for this Project.
2. The example test forms are not intended to be complete or comprehensive. Edit and supplement the forms to meet the requirements for testing and test forms specified in this Section and other Contract Documents.

END OF SECTION

THIS PAGE INTENTIONALLY LEFT BLANK FOR DOUBLE SIDED PRINTING

SECTION 28_21_01

CCTV MONITORING SYSTEM

PART 1 GENERAL

1.1 SUMMARY

A. Design & furnish in coordination with electrical contractor and SCADA integrator a complete CCTV monitoring system. Some system component, wiring, conduits, etc are not shown on electrical Drawings and shall be designed and furnished complete.

B. System shall cover Northside & Southside treatment plants and have full monitoring output to monitors in the Northside Control Room and SCADA system.

C. Supplier to review Drawings and plant layout to become familiar with treatment plant in order to determine the requirements for camera mounting, power, conduit, routing, etc.

D. The system includes CCTV video monitoring equipment and all other related items listed for a complete and functional system.

E. Contractor shall employ the services of a supplier with experience of similar installations. Supplier shall assume full responsibility for the selection of equipment and components required, installation, start-up/testing, and training. Supplier services include:
1. System design.
2. Preparation of detailed system schematics
3. Coordination with electrician and SCADA system provider.
4. Installation of all equipment including providing all necessary mounting accessories.
5. Provide all wiring, conduits, and junction boxes from end devices.
6. Start-up, field debugging, calibrating, configuring and testing of system
7. Integrate security system with any/all proposed components
8. Security system training on care and use of system for Owner's personnel.
9. The system provided shall be turnkey system solutions, wherein each component is seamlessly integrated with overall system.

F. Furnish and install the incidental items not actually shown or specified which are required by good practice to provide a complete and functional system.

G. Provide labor, material and services to complete the permitting, installation, and performance acceptance testing of the complete and functional system.

1.2 RELATED SECTIONS

A. Section 01_00_01 Basic Requirements

B. Section 01_33_01 General Submittal Requirements

C. The Contract Documents are a complete unit and complementary to each other. The individual Specification sections and other Contract Documents do not contain all cross

references to "related work" or "related sections." It is the Contractor's responsibility to review the complete Contract Documents in order to properly scope, schedule and coordinate the work of any/all subcontractors, suppliers, and others on this project. Anything called out in one location of the Contract Documents is binding as if it were called out in all sections of the Contract Documents.

1.3 SUBMITTALS

A. Submittals for products and miscellaneous items in this specification section shall be submitted in accordance with Section 01_33_01 General Submittal Requirements and related submittal sections and provisions of the Contract Documents.

B. Submittal to include proposed camera locations and mounting strategies and should specifically outline any additional poles required.

1.4 REFERENCES

A. The Contractor and/or Manufacturer shall follow the standards listed below, except as otherwise specified herein. The latest revision or edition in effect at the time of bid opening shall be utilized.
   1. Institute of Electrical and Electronic Engineers (IEEE).
   2. National Electrical Code (NEC).
   3. National Electrical Manufacturers Association (NEMA).
   4. Underwriters' Laboratories, Inc. (UL).

1.5 QUALITY ASSURANCE

A. Contractor shall employ the services of a supplier for programming, calibrating, system start-up and testing.

B. Installer shall demonstrate successful experience designing, installing, commissioning, training and servicing a closed-circuit television systems of the similar size and complexity.

C. Installer shall provide single point of contact for both systems to the Owner and Engineer during the entire construction phase.

D. The security system supplier shall retain a qualified factory trained serviceman to perform the following services:
   1. Inspect and adjust the equipment after installation and ensure that it operates properly and that it is mounted correctly.
   2. Instruct Owner's personnel in the operation and maintenance of the equipment.

1.6 SPECIAL WARRANTY

A. The Manufacturer shall warrant the equipment to be free from defects in material and workmanship for **two years** from date of final payment of the equipment containing the items specified in this Section. Within such period of warranty, the Manufacturer shall promptly furnish all material and labor necessary to return the equipment to new operating condition. Any warranty work requiring shipping or transporting of the equipment shall be performed by the Contractor at no expense to the Owner.

PART 2 PRODUCTS

2.1 SYSTEM DESCRIPTION

A. CCTV system including end devices and cameras shall seamlessly integrate with the proposed SCADA & controls system.

2.2 CAMERAS

A. Subject to compliance with the Contract Documents, the following manufacturers are acceptable:
   1. Bosch or approved equal as recommended for installation condition.

B. The listing of specific manufacturers above does not imply acceptance of their products that do not meet the specified ratings, features and functions. Manufacturers listed above are not relieved from meeting these specifications intheir entirety.

C. General:
   1. Provide fixed cameras to cover the site locations with suggested locations as follows for complete coverage:
      a. Southside (8 cameras) to be field located at the following locations:
         1) FEB area (mounted to FEB crane)
         2) FEB lift station (mounted to FEB crane)
         3) Headworks (mounted to headworks cover)
         4) Electrical Building, Internal (wall mount)
         5) General Site (x2) (pole mounts)
         6) Entrance (pole mount)
         7) Generator (pole mount)
      b. Northside (20 cameras) to be field location at the following locations:
         1) Office/Lab/UV/Belt Press (x6) (wall mount)
         2) SBR/EQ/Digester (x2) (mounted to basin cranes / rails)
         3) FEB area (x2) (mounted to crane)
         4) Blower Building, Internal (wall mount)
         5) General Site (x4) (pole mounts)
         6) Headworks (x2) (wall mount / cover mount)
         7) Effluent Lift Station (x2) (mounted to crane / cover)
         8) Entrance Gate (pole mount)
   2. The environmental camera system shall consist of an outdoor camera and housing designed specifically for use in moderate to severe climate conditions and shall include thermostatically controlled heater, window defroster/defogger, sun shroud, viewing window wiper and insulation blanket along with any accessories whichmay be required for a complete environmental camera system.
   3. The camera system shall be able to transmit/receive data
   4. All mounting hardware shall be furnished with the system.

D. Fixed Outdoor Cameras:
   1. Refer to Drawings.
      a. The camera type is for reference only. The Contractor shall provide a camera from the approved manufacturers which meet the following features (adjust for indoor vs outdoor and mounting locations)
   2. Electrical:

a. Input Voltage: Power over Ethernet IEEE 802.3af/802.3at Type 1 Class 3.
b. Maximum Power Consumption: 13 Watts.

3. Connectors: RJ45 10BASE-T/100BASE-TX PoE
4. Mounting Brackets:
5. All mounting brackets shall be of corrosion-resistant construction and shall be load rated to support camera, housing, and accessories specified herein. Mounting heads shall be adjustable.
   a. Mounting shall be suitable for pole, wall, or parapet mounting as shown.
      1) For wall mounting, provide the Axis Pendant Kits for fixed camera; Wall Mount
      2) For parapet mounting, provide the Axis Pendant Kits for fixed camera; Parapet Mount
      3) For corner mounting, provide the Axis Pendant Kits for fixed camera; Corner Mount
      4) For pole mounting, provide the Axis Pendant Kits for fixed camera; Pole Mount
6. Environmental Enclosure:
   a. NEMA 4X rated.
   b. Material: Aluminum inner camera module with encapsulated electronics
   c. Viewing Window: Polycarbonate transparent cover
   d. Operating Temperature: -30° to +50° C
   e. Humidity: 10 – 100% condensing

2.3 VIDEO STORAGE UNIT

A. Subject to compliance with the Contract Documents, the following manufacturers are acceptable:
   1. Refer to Drawings.

B. Storage unit shall be housed in Northside Control Room.

C. The listing of specific manufacturers above does not imply acceptance of their products that do not meet the specified ratings, features and functions. Manufacturers listed above are not relieved from meeting these specifications in their entirety.

D. General:
   1. The video storage unit shall be provided for unattended video recording. Software shall allow for monitoring over an IP network and pulling video data from storage.

E. Features:
   1. 4 Drive Bays.
   2. 4 x 2TB Hard Drives.

F. Physical:
   1. Input Voltage: 100-240 VAC, 50-60 Hz.
   2. Operating Temperature: 5 °C to + 35 °C.
   3. Humidity: 20 – 80% (non-condensing).

G. Network and Connectors:
   1. 10/100/1000 Base-T, RJ-45 Ethernet Connection.
   2. Minimum of two USB ports.

2.4 DESKTOP WORKSTATION

A. Integrate to proposed Work Stations and route all feeds/controls to proposed monitor systems in Northside Control Room.

PART 3 EXECUTION

3.1 INSTALLATION

A. Install all equipment at the locations outlined and in accordance with the manufacturer's recommendations.

B. Coordinate the mounting of equipment and any/all mounting hardware and poles required.

C. Electrical Requirements: electrical wiring and conduit connections to security devices shall be made in accordance with and using components meeting the requirement of Division 26.

D. Install all conduit and cable required for the complete system. Provide pull andjunction boxes as required.

E. Cabling: Cabling and interconnecting wiring shall be as indicated on the Contract Drawings and as required to provide a complete and functional system. Wiring shalluse a consistent color code throughout the systems. Coordinate with existing system to continue the same color code.

F. System Conduit and Raceways: System cables shall be installed in conduit racewaysystems meeting the requirements of Division 26.

G. The system supplier shall provide all supports, bracing, wiring andincidental hardware required for a complete installation.

H. Install cameras, including conduit and cable, in accordance with approved shop drawings and the manufacturer's recommendations.

END OF SECTION

SHAWNEE MUNICIPAL AUTHORITY

WASTEWATER SYSTEM IMPROVEMENTS

CONTRACT DOCUMENTS & SPECIFICATIONS
VOLUME 4 OF 8
DIVISION 31 TO DIVISION 40

IN COOPERATION WITH

OKLAHOMA WATER RESOURCES BOARD

OWRB PROJECT # ORF-20-0018-CWA

ISSUED FOR BIDDING

City of Shawnee
OKLAHOMA

WALL ENGINEERING

Wall Engineering Project # SHN-20-01
WE Firm Certificate of Authorization #5413

THIS PAGE INTENTIONALLY LEFT BLANK FOR DOUBLE SIDED PRINTING

SHAWNEE MUNICIPAL AUTHORITY
WASTEWATER SYSTEM IMPROVEMENTS

ISSUED: FOR CONSTRUCTION

June 2022

The seal below covers the following sections of the Contract Documents:

Division 0, Division 1, Division 2, Division 3, Division 5, Division 9, Division 10, Division 13, Division 31, Division 32, Division 33, Division 40, Division 41, Division 43, Division 46, Division 47



THIS PAGE INTENTIONALLY LEFT BLANK FOR DOUBLE SIDED PRINTING

SHAWNEE MUNICIPAL AUTHORITY
WASTEWATER SYSTEM IMPROVEMENTS

ISSUED: FOR CONSTRUCTION

June 2022

The seal below covers the following sections of the Contract Documents:

Division 26, Division 27, Division 28



THIS PAGE INTENTIONALLY LEFT BLANK FOR DOUBLE SIDED PRINTING

SHAWNEE MUNICIPAL AUTHORITY
WASTEWATER SYSTEM IMPROVEMENTS

ISSUED: FOR CONSTRUCTION

JUNE 2022

The seal below covers the following sections of the Contract Documents:

Division 23



THIS PAGE INTENTIONALLY LEFT BLANK FOR DOUBLE SIDED PRINTING

CONTRACT DOCUMENTS
TABLE OF CONTENTS

VOLUME 1 OF 8

DIVISION 00 – PROCUREMENT AND CONTRACTING DOCUMENTS

00_01_01.01	Project Title Page
00_01_07.01	Seals Page, Civil
00_01_07.02	Seals Page, Electrical
00_01_07.03	Seals Page, Mechanical
00_01_10	Table of Contents
00_01_19	Prequalified Contractors
00_01_21	Requirements for Bidders

PROCUREMENT REQUIREMENTS

00_11_13	Advertisement for Bids
00_21_13	Instruction to Bidders
00_41_13	Bid Form
00_41_13	Bid Form - Attachment "A" - Bid Summary Sheet
00_41_16	List of Manufacturers
00_41_19	List of Subcontractors
00_41_16	List of Manufacturers
00_41_19	List of Subcontractors
00_41_22	Special Materials Cost Increases
00_43_13	Bid Security Form
00_45_19.13	Noncollusion Affidavit
00_45_21	Business Relationship Affidavit
00_45_17.13	Payroll Affidavit

OWRB CWSRF SPECIAL PROCUREMENT & PROJECT REQUIREMENTS

00_46_47.39	Certification of Labor Standards
00_46_47.19	DBE Guidance
00_46_47.23	DBE Subcontractor Participation Form
00_46_47.26	DBE Subcontractor Performance Form
00_46_47.29	DBE Subcontractor Utilization Form
00_46_47.33	American Iron & Steel Certification
00_46_47.36	Bidder Statements
00_46_47.39	Wage Rates – Building
00_46_47.41	Wage Rates – Heavy

CONTRACTING REQUIREMENTS

00_51_00	Notice of Award
00_52_13	Agreement - Stipulated Price
00_55_00	Notice to Proceed

PROJECT FORMS

00_61_13.13	Performance Bond Form
00_61_13.16	Payment Bond Form
00_61_20	Maintenance Bond Form
00_62_16	Certificate of Insurance
00_62_76	Application for Payment Form
00_62_76.13	Invoice Affidavit Form

THIS PAGE INTENTIONALLY LEFT BLANK FOR DOUBLE SIDED PRINTING

CONTRACT DOCUMENTS
TABLE OF CONTENTS

00_63_13 Request for Information
00_63_36 Field Order Form
00_63_49 Work Change Directive Form
00_63_63 Change Order Form
00_63_67 Attorney Certificate of Approval
00_65_16 Substantial Completion Form
00_65_19.24 Acceptability of Work Form
00_65_19.29 Release of Claimants Form
00_65_19.32 Property Owner Release Form

CONDITIONS OF THE CONTRACT
00_72_13 General Conditions - Stipulated Sum
00_73_00 Supplementary Conditions
00_73_02 OWRB Supplemental Conditions

VOLUME 2 OF 8

DIVISION 01 – GENERAL REQUIREMENTS
01_00_01 Basic Requirements
01_11_01 Sequence of Construction
01_29_00 Payment Procedures
01_32_34 Photographic & Video Log
01_33_01 General Submittal Requirements
01_33_02 Pre-Bid Equipment Submittal Requirements
01_36_00 Pipe Laying Prove-out
01_43_24 System Integrator Prequalification
01_45_24 Special Tests & Inspections
01_45_29 Testing Laboratory Services
01_56_17 Dust Control
01_75_23 Testing, Training & Facility Startup
01_78_23 Operation and Maintenance Data
01_78_34 Warranties and Bonds
01_91_01 Facility Commissioning

DIVISION 02 – EXISTING CONDITIONS
02_21_20 Subsurface Utility Engineering
02_30_00 Subsurface Investigation
02_41_00 Demolition

DIVISION 03 – CONCRETE
03_11_00 Concrete Formwork
03_15_20 Concrete Joints & Embedded Items
03_20_00 Concrete Reinforcement
03_21_18 Epoxy Bonding in Concrete
03_30_00 Cast-in-place Concrete
03_35_00 Concrete Finishes
03_60_00 Grouting
03_60_01 Basin Bottom Grout
03_70_00 Mass Concrete

THIS PAGE INTENTIONALLY LEFT BLANK FOR DOUBLE SIDED PRINTING

CONTRACT DOCUMENTS
TABLE OF CONTENTS

DIVISION 05 – METALS
05_05_20 Anchorages
05_05_25 Mechanical Anchoring
05_50_00.01 Miscellaneous Metal Fabrications
05_51_00.13 Metal Ladders, Platforms & Stairs
05_52_00 Metal Railings
05_53_00.13 Metal Grates & Cover Plates

DIVISION 9 – FINISHES
09_91_00.13 Painting of Treatment Plants

DIVISION 10 - SPECIALTIES
10_44_16 Fire Extinguishers

DIVISION 13 – SPECIAL CONSTRUCTION
13_34_19 Metal Building Systems

VOLUME 3 OF 8

DIVISION 23 – HEATING, VENTILATING & AIR CONDITIONING (HVAC)
23_00_00 Mechanical General Requirements

DIVISION 26 – ELECTRICAL
26_05_00 Common Work Results for Electrical
26_05_20 Hazardous Classified Area Construction
26_06_00 Grounding & Bonding
26_07_00 Hangers & Supports
26_07_50 Identification for Electrical Systems
26_12_30 600-Volt or Less Wires & Cables
26_12_50 Fiber Optic Cable & Appurtenances
26_13_00 Conduits
26_13_30 Duct Banks
26_13_40 Boxes
26_13_60 Wireway
26_14_00 Wiring Devices
26_15_00 Low Voltage Wire Connections
26_21_00 Utility Coordination
26_26_20 Variable Frequency Drives 0.50-50 Horsepower
26_26_50 Reduced Harmonic Variable Frequency Drives
26_27_20 Dry-Type Transformers
26_28_50 Surge Protection Devices
26_29_00 Electrical Power Monitoring
26_30_50 Electrical System Studies
26_31_21.50 600KW Generator
26_32_13.60 200A Automatic Transfer Switch
26_32_13.10 15KW Generator
26_32_13.20 1750KW Generator
26_32_13.30 150A ATS

THIS PAGE INTENTIONALLY LEFT BLANK FOR DOUBLE SIDED PRINTING

CONTRACT DOCUMENTS
TABLE OF CONTENTS

26_32_13.40 4000A ATS
26_41_10 Disconnect Switches
26_41_20 Low Voltage Molded Case Circuit Breakers
26_41_30 Low Voltage Insulated Case Circuit Breakers
26_42_20 Motor Starters
26_44_10 Group Mounted Circuit Breaker Switchboards
26_44_50 Panelboards
26_47_20 Package Power Supply Center
25_51_00 Lighting LED Luminaires
26_67_00 Lighting Protection
26_95_00 Field Electrical Acceptance Tests

DIVISION 27 – PROCESS CONTROL & INSTRUMENTATION SYSTEMS
27_05_00 Common Work Results for Process Control & Instrumentation Systems
27_10_00 Control Strategies
27_30_60 Level Measurement Ultrasonic
27_30_20 Flow Measurement Magnetic Flowmeters
27_34_00 Analytical Devices
27_40_70 Pressure Measurement Submersible
37_60_40 Temperature Measurement RTD
27_71_00 Control Systems Panel Enclosure and Panel Components
27_72_00 Control Systems Programmable Logic Controllers
27_73_30 Control Systems Network Materials & Equipment
27_73_31 Computer System Hardware
27_73_32 HMI System Software
27_95_00 Commissioning for Instrumentation & Controls

DIVISION 28 – ELECTRONIC SAFETY & SECURITY
28_21_01 CCTV Monitoring System

VOLUME 4 OF 8

DIVISION 31 – EARTHWORK
31_00_00 Earthwork
31_05_19 Geosynthetics for Earthwork
31_23_23.33 Flowable Fill
31_23_34 Utility Earthwork & Backfill
31_25_00 Erosion Control
31_41_33 Trench Shielding

DIVISION 32 – EXTERIOR IMPROVEMENTS
32_31_13 Chainlink Fences and Gates
32_92_00 Turf and Grasses

DIVISION 33 – UTILITIES
33_01_30.90 Bypass Pumping of Sewer Systems
33_01_33 Wastewater Liquid & Sludge Removal & Disposal
33_05_05.17 Mechanical Joint Restraint
33_05_07.13 Utility Directional Drilling

THIS PAGE INTENTIONALLY LEFT BLANK FOR DOUBLE SIDED PRINTING

CONTRACT DOCUMENTS
TABLE OF CONTENTS

33_05_07.23 Utility Boring & Jacking
33_05_09.34 Concrete Thrust Blocks & Collars
33_05_25 Steel Casing Pipe
33_05_61 Concrete Manholes
33_05_64 Precast Reinforced Concrete Vault
33_05_97.23 Underground Utility Warning Tape
33_05_97.24 Utility Locator System

DIVISION 40 – PROCESS INTERCONNECTIONS
40_05_00.13 Piping Systems Testing
40_05_06.03 Pipe Couplings
40_05_07.03 Pipe Supports
40_05_12 Piping Specialties
40_05_19.20 Ductile Iron Pipe & Fittings
40_05_23 Stainless Steel Process Pipe & Tubing
40_05_33 High Density Polyethylene (HDPE) Pipe

VOLUME 5 OF 8

40_05_57.24 Electric Actuators for Valves and Gates
40_05_58 Specialty Valves
40_05_59.23 Stainless Steel Gates
40_05_61.43 Knife Gate Valves
40_05_62.64 Butterfly & Plug Valves
40_05_66.23 Surge Relief Angle Valves
40_05_67 Gate Valves
40_05_71.23 Mud Valves
40_41_13.01 Insulation and Heat Tracing
40_71_84 Parshall Flumes
40_75_43 Dissolved Oxygen Sensors

DIVISION 41 – MATERIALS PROCESSING AND HANDLING EQUIPMENT
41_21_23.15 Belt Conveyor System
41_22_00 Cranes & Hoists

DIVISION 43 – PROCESS & LIQUID HANDLING, PURIFICATION & STORAGE EQUIPMENT
43_11_16 High Efficiency Blower Packages
43_23_31.35 Non-Potable Water Pumps
43_23_58.03 Positive Displacement Rotary Lobe Pumps
43_25_13.13 Submersible Pump System

DIVISION 46 – WATER & WASTEWATER EQUIPMENT
46_05_09 Process Equipment Identification
46_05_12 Equipment General Provisions
46_07_54 Waste Activated Sludge Pump Station
46_21_53 Perforated Fine Screen
46_21_73.13 Screw Washer Compactor
46_23_24 Grit Removal, Washing & Dewatering
46_33_33 Polymer Blending & Feed Equipment

THIS PAGE INTENTIONALLY LEFT BLANK FOR DOUBLE SIDED PRINTING

CONTRACT DOCUMENTS
TABLE OF CONTENTS

46_41_23	Submersible Mixers
46_51_55	Low Profile Cascade Aerator
46_53_57	SBR & Aerobic Digester
46_66_57	UV Disinfection Equipment
46_76_21.03	Belt Filter Press System

VOLUME 6 OF 8
CONSTRUCTION DRAWINGS – NORTHSIDE WASTEWATER TREATMENT PLANT

VOLUME 7 OF 8
CONSTRUCTION DRAWINGS – SOUTHSIDE & LIFT STATIONS

VOLUME 8 OF 8
CONSTRUCTION DRAWINGS – CONVEYANCE

THIS PAGE INTENTIONALLY LEFT BLANK FOR DOUBLE SIDED PRINTING

SECTION 31_00_00

EARTHWORK

PART 1 GENERAL

1.1 SUMMARY

A. Earthwork as required by this section of the Contract Documents and outlined on the Drawings consisting of excavation, embankments and grading as necessary for construction including backfill and disposal of unsuitable, waste, and surplus excavated materials.

B. Provide the services of a licensed Professional Engineer registered in the State of Oklahoma to prepare temporary excavation support system designs and submittals as necessary.

C. Furnish and install temporary excavation support and safety systems, including sheeting, shoring and bracing, to ensure the safety of personnel and protect adjacent structures, piping, etc., and meet appropriate requirements established in the Occupational Safety and Health Administration (OSHA) Safety and Health Regulations, Part 1926, Subpart P-Excavations, Trenching and Shoring, and other applicable regulations.

D. Perform excavation regardless of type, nature, or condition of materials encountered.

E. Excavation, regardless of material encountered, shall conform to the dimensions and elevations indicated on the drawings, and shall include trenching and foundation drainage systems as required beyond the building line of each building and/or structure.

F. Contractor shall make his own estimate of the type, extent and quantity of the various materials to be excavated in order to accomplish the work. No quantities will be outlined on Drawings.

G. There will be no extra compensation for dewatering unless specifically outlined on the drawings or bid proposal. Cost to be included in associated items of work.

H. There will be no addition compensation for rock removal unless specifically outlined on the drawings or bid proposal. Cost to be included in associated items of work.

I. Blasting will not be permitted as a means of excavation

J. Prior to any excavation work, Contractor shall contact OKIE (1-800-CALL-OKIE) as well as all utility Owners within the work site.

K. Any Drawing or Specification that conflicts with this Specification section shall be brought to the attention of the Engineer prior to bid. When no clarification is provided the Contractor is to assume that the more restrictive & expensive product/system/item applies and shall be included in the Contractor's bid.

1.2 RELATED SECTIONS

A. Section 01_00_01 – Basic Requirements

B. Section 01_33_01 General Submittal Requirements

C. Section 31_41_33 - Trench Shielding

D. Section 31_23_24 – Utility Earthwork & Backfill

1.3 SUBMITTALS

A. Submittals for products and miscellaneous items in this specification section shall be submitted in accordance with Section 01_33_01 General Submittal Requirements and related submittal sections if included.

B. Submit testing laboratory reports, as specified or required, to show compliance with specifications for material from off-site locations. The specified tests shall be performed by a certified independent testing laboratory retained and paid by the Contractor.

C. Any submittals required for trench safety plan, dewatering and drainage plans, and similar temporary facilities, will be for reference purposes only and maintained for record purposes in the Engineer files. Submittal of these items will not relieve the Contractor of any responsibility for the adequacy of support, safety, dewatering, and drainage systems.

D. Submit details of excavation plans designed and prepared by a licensed Professional Engineer, who is registered in the State of Oklahoma and has experience in soils engineering, for all structure excavation. The plans shall include details of any proposed shoring systems, systems to protect existing facilities, slope stability monitoring, and the Contractor's means and methods for controlling groundwater. The plans shall be submitted to the Engineer for record purposes prior to proceeding with any excavation work.

1.4 REFERENCE STANDARDS

A. American Association of State Highway and Transportation Officials
   1. AASHTO T-180 - Standard Method of Test for Moisture-Density Relations of Soils Using a 10-lb Rammer and a 18-in. Drop

B. American National Standards Institute/American Society for Testing and Materials (ANSI/ASTM) latest version.
   1. ASTM C33 - Standard Specification for Concrete Aggregate.
   2. ASTM C40 - Standard Test Method for Organic Impurities in Fine Aggregates for Concrete.
   3. ASTM C136 - Standard Test Method for Sieve Analysis of Fine and Coarse Aggregate.
   4. ASTM C150 - Standard Specification for Portland Cement.
   5. ASTM D75 - Sampling Aggregates.
   6. ASTM D698 - Standard Test Methods for Laboratory Compaction Characteristics of Soil Using Standard Effort (12 400 ft-lb/ft^3 (600 kN-mm/m^3))

7. ASTM D1557 - Standard Test Methods for Laboratory Compacion Characteristics of Soil Using Modified Effort (56,00 ft-lb/ft^3 (2,700 kN-m/m^3))
8. ASTM D2922 - Density of Soil and Soil-Aggregate in Place by Nuclear Methods (Shallow Depth).
9. ASTM D4253 - Maximum Index Density of Soils Using a Vibratory Table
10. ASTM D4254 - Minimum Index Density of Soils and Calculation of Relative Density.
11. ASTM D4318 - Standard Test Method for Liquid Limit, Plastic Limit and Plasticity Index of Soils.

C. ODOT Standard Specifications for Highway Construction, Latest Edition - Oklahoma, Department of Transportation (ODOT). TxDOT Standard Specifications for Construction and Maintenance of Highways, Streets & Bridges, Latest Edition

1.5 QUALITY ASSURANCE

A. Materials shall be tested and observed as described in the following paragraphs. Allow free access to the work for selection of materials and observation.
1. At all structures, prior to placement of bedding material, concrete working mats, crushed stone base, or concrete fill, the geotechnical engineer shall observe the prepared subgrade to confirm its suitability for supporting the work to be placed thereon. Such observation shall include visual review, and in-place soil density tests as required.
2. Before and during placement of fill and backfill, the soils testing laboratory shall provide at least one density and moisture content test for each 2,500 ft^2 of surface area for each compacted lift of fill or more stringent as may be stated elsewhere.

B. Initial compaction demonstration:
1. Adequacy of compaction equipment and procedures: Demonstrate adequacy of compaction equipment and procedures before exceeding any of following amounts of earthwork quantities:
a. 50 cubic yards of backfill adjacent to structures.
b. 100 cubic yards of embankment work.
c. 100 cubic yards of fill.
d. 50 cubic yards of roadway base material.
e. 100 cubic yards of road fill.
2. Compaction sequence requirements: Until specified degree of compaction on previously specified amounts of earthwork is achieved, do not perform additional earthwork of the same kind.

C. Contractor shall perform all work related to this Section in accordance with the approved Stormwater Pollution Prevention Plan (SWPPP). See Section 01_00_01 – Basic Requirements and Section 31_25_00 Erosion Control.

1.6 INSPECTION OF EXCAVATIONS

A. Do not place reinforcing steel or concrete in the excavation prior to inspection unless the Engineer's Representative has given approval to proceed without inspection.

1.7 DESIGN REQUIREMENTS

A. Plans indicate the existing and the finished grades required for the construction of project. Contractor shall stake out the units and site to establish elevations, and do all other layout work required.

1.8 PROTECTION OF FACILITIES

A. Existing utility lines (either overhead or underground) and pavement dictated to remain shall be kept free of damage from Contractor's operations. If damaged, any utilities or pavement shall be restored at the Contractor's expense.

B. Before the start of earthwork operations, adequately protect utilities, trees, shrubs, and other permanent objects. Repair costs resulting from damage to permanent facilities due to negligence or lack of adequate protection will be charged to the Contractor.

C. Provide surface drainage during the period of construction to protect the work and to avoid nuisance to adjoining property.

D. The Contractor shall conduct his operations in such fashion that trucks and other vehicles do not create a dirt nuisance in the streets. The truck beds shall be sufficiently tight, and shall be loaded in such a manner that objectionable materials will not be spilled onto the streets. Any dirt, mud, or other materials that are spilled onto the streets or deposited onto the streets by the tires of vehicles shall be promptly cleared away by the Contractor.

1.9 PROTECTION AND/OR REMOVAL OF UTILITY LINES

A. The Contractor shall anticipate all underground and above ground obstructions such as, but not limited to, water mains, gas lines, storm and sanitary sewers, telephone or electric light or power ducts, concrete, and debris.
   1. It shall be the responsibility of the Contractor to verify the existence and location of all underground and above ground utilities along the route of the work.
   2. Any such lines or obstructions indicated on the Plans show only the approximate locations and shall be verified in the field by the Contractor.
   3. The Owner and Engineer will endeavor to familiarize the Contractor with all known utilities and obstructions, but this shall not relieve the Contractor from full responsibility in anticipating all underground and above ground obstructions whether or not shown on the Plans.
   4. The omission from or the inclusion of utility locations on the Plans is not to be considered as the non-existence of, or a definite location of existing utilities.

B. The Contractor shall, at his own expense, maintain in proper working order and without interruption of service all existing utilities and services which may be encountered in the work.
   1. With the consent of the Engineer and utility owner such service connections may be temporarily interrupted to permit the Contractor to remove designated lines or to make temporary changes in the locations of services.
   2. The cost of making any temporary changes shall be at the Contractor's expense.

C. The Contractor will take the necessary precautions to protect existing utilities from damage due to his operations.

D. Any damage to the utilities will be repaired at the Contractor's expense.

E. Notify all utility companies involved to have their utilities located and marked in the field.
   1. All underground utilities shall then be uncovered to verify location and elevation before construction begins.
   2. The Contractor shall obtain all necessary permits.

F. Utility Spacing: The spacing for utility lines shall meet the installation requirements and the requirements of ODEQ.

PART 2 PRODUCTS

2.1 WATER

A. Use water from a acceptable source.

2.2 FILL MATERIALS

A. Subgrade material:
   1. Material remaining in place after excavation.
   2. Suitable for slab/foundation subgrade, undisturbed nor over excavated.
   3. Where subgrade soils are soft, loose, or otherwise unsatisfactory, the soil shall be removed and replaced with select fill or soil cement as determined by the Engineer.
   4. Should over-excavation occur beyond lines/grade of plans, the soil shall be replaced with select fill or soil cement as determined by the Engineer.

B. Common Fill material:
   1. Excavated and re-used material or from borrow approved by the Engineer.
   2. Graded free of lumps larger than 3 inches, rocks larger than 2 inches, excessive silts and debris.
   3. Do not use soil containing brush, roots, or similar organic matter.
   4. Conforming to ASTM D2487 Class II or Class III soils with a liquid limit less than 40, and a plasticity index less than 20, but greater than 4.

C. Select Fill material:
   1. Imported borrow material from borrow area approved by the Engineer. Material shall be tested for compliance by the Contractor and test results submitted to the Engineer for approval.
   2. Clayey sand soils free from organic matter with no lumps larger than 1 inch, no rocks larger than ½ inch, nor excessive silts.
   3. Do not use soils containing brush, roots, sod or other organic materials.
   4. Select fill shall conform to ASTM D2487 Class II or Class III and shall have a liquid limit less than 30 with a plasticity index less than 15 but greater than 4
   5. When select fill is used to backfill pipe it shall conform to ASTM D2321 Class II or Class III

D. Top Soil:
   1. Soil suitable for growth of surface cover. Material stripped and stockpiled from site or borrowed from off site.

2. Free from roots, brush, rocks, and other extraneous matter exceeding 1 inch in any direction. Free from weeds
3. Minimum 60% sand, Maximum 30% silts, Maximum 10% clay, no less than 6% and no more than 20% organic matter.
4. Liquid limit range from 15 to 30 and plasticity index from 5 to 40.
5. Submit test data showing compliance with this specification. Include percent weight of constituent material, material particle size, and pH.
6. Testing and Analysis of Subsoil Material: Perform in accordance with ASTM D698.

E. ODOT Aggregate Base Course – Blended aggregate base course meeting the requirements of Oklahoma Department of Transportation (Type "A") in the type specified on the Drawings.

F. Drain Rock material
1. As shown on the Drawings, under structures and behind walls shall be clean, washed, sound durable, well-graded crushed rock, crushed gravel or natural stone gravel.
2. Conforming to ASTM C-33 Size No. 57 coarse aggregate between 1 inch and 1/4 inch.

G. Crushed Rock material (#57, #67, Fine & Course)
1. Crushed rock shall consist of sound and durable particles free from injurious amounts of salt, alkali, vegetable matter, or other material either free or as adherent coating.
2. Gradation shall meet the following requirements for percentage by weight when tested in accordance with ASTM C136:

a. <u>#57 Crushed Rock</u>

Passing 38.1 mm (1-1/2") sieve	100%
Passing 25.4 mm (1") sieve	95-100%
Passing 12.7 mm (1/2") sieve	25-60%
Passing No. 4 sieve	0-10%
Passing No. 8 sieve	0-5%

b. <u>#67 Crushed Rock</u>

Passing 25.4 mm (1") sieve	100%
Passing 19.0 mm (3/4") sieve	90-100%
Passing 9.53 mm (3/8") sieve	20-55%
Passing No. 4 sieve	0-10%
Passing No. 8 sieve	0-5%

c. <u>Fine Crushed Rock</u>

Passing 12.7 mm (1/2") sieve	100%
Passing 9.53 mm (3/8") sieve	95-100%
Passing No. 4 sieve	40-65%
Passing No. 8 sieve	0-10%

d. <u>Coarse Crushed Rock</u>

Passing 38.1 mm (1-1/2") sieve	100%
Retained on 19/1 (3/4") sieve	100%

H. Standard Gravel ("Gravel")

1. Gravel shall consist of uncrushed stones and shall not have by weight more than one percent organic matter, clays, or loam and not more than five percent by weight of any, one or combination of slate, shale, schist, or soft particles of sandstone.
2. Gradation shall meet the following requirements for percentage by weight when tested in accordance with ASTM C136:

a. Standard Gravel

Passing 38.1 mm (1-1/2") sieve	100%
Retained on 19.1 (3/4") sieve	100%

I. Pea Gravel

1. Natural stone; washed, free of clay, shale, organic matter; graded in accordance with ASTM C136 to the following limits:
2. Minimum Size: ¼ inch
3. Maximum Size: ⅝ inch

J. Sand

1. Sand shall consist of clean, hard, durable, uncoated grains, free from lumps, and organic material.
2. Gradation shall meet the following requirements for percentage by weight when tested in accordance with ASTM C136:

a. Embedment Sand

Passing No. 4 sieve	80-100%
Passing No. 8 sieve	65-100%
Passing No. 16 sieve	40-80%
Passing No. 50 sieve	7-40%
Passing No. 100 sieve	2-20%
Passing No. 200 sieve	0-10%

K. Granular Material

1. Granular material shall be free flowing, such as sand or hydraulically graded crushed stone fines, or mixed sand and gravel. Material shall have no more than 10 percent fines and shall be free from lumps, stones over two inches in diameter, and organic matter.

L. Filter Material

1. Where indicated on the Drawings or required in the work, use a mixture of coarse aggregate or fine aggregate for filter material. Proportion the mixture with two parts coarse aggregate to one-part fine aggregate by volume.
2. Coarse aggregate shall consist of gravel, crushed gravel or crushed stone and shall have a gradation limit of three-quarter-inch (3/4") to No. 4 complying with ASTM C33 (Type 7).
3. Fine aggregate shall consist of natural sand and shall comply with the requirements of ASTM C33 for fine aggregate.

2.3 COMPACTION EQUIPMENT

A. Provide compaction equipment of suitable type and adequate to obtain the densities specified.

B. Operate compaction equipment in strict accordance with the manufacturer's instructions and recommendations.

C. Hand-operated equipment shall be capable of achieving the specified densities and shall be required not accessible for other manners of compaction.

2.4 MOISTURE CONTROL EQUIPMENT

A. Provide equipment for applying water of a type and quality adequate for the work; it shall not leak; and be equipped with a distributor bar or other approved device to assure uniform application.

B. Provide equipment for mixing and drying out material consisting of blades, discs, or other approved equipment.

2.5 WATER REMOVAL EQUIPMENT

A. Provide and operate equipment adequate to keep excavation and trenches free of water. Dewatering will not be measured for payment and should be considered subsidiary to contractors work.

2.6 IMPORTED MATERIAL ACCEPTANCE

A. Import when insufficient material is available on-site.

B. Locate and arrange use of a site near the construction area for obtaining borrow material.

C. Additional tests required at the borrow area:

D. Standard Proctor.

E. Remolded permeability (if used for lagoon construction)

F. Atterberg limits.

G. Upon completion of removal of borrow material, grade the site to drain, place topsoil on disturbed areas, and establish grass.

H. If is the contractor's responsibility to accurately determine if adequate material is present at the site prior to bidding.

I. Costs shall be the responsibility of the Contractor.

2.7 MATERIAL ACCEPTANCE

A. Provide samples for testing representative of the actual material to be installed in the work. Take samples from each 2,000 cubic yards of material stockpiled. Depending on the uniformity of the material, Engineer may request more frequent samples.

B. Forward test results to the Engineer at least 10 days before the material is required for use. If tests indicate that the material does not meet Specification requirements, the material shall not be installed in the work.

C. Material which is placed in the work but does not conform to the Specification requirements shall be removed and replaced at the Contractor's sole expense.

PART 3 EXECUTION

3.1 EXAMINATION

A. Verification of conditions:
   1. Character and quantity of material:
      a. Verify character and quantity of rock, gravel, sand, silt, water, and other inorganic or organic materials to be encountered in work to be performed.
      b. Determine gradation and shrinkage, and swelling of soil, and suitability of material for use intended in work to be performed.
      c. Determine quantity of material, and cost thereof, required for construction of backfills, cuts, embankments, excavations, fills, and roadway fills, whether from onsite excavations, or borrow areas or imported materials. Include in cost of work to be performed.
      d. Include wasting of excess material, if required, in cost of work to be performed.

3.2 EXCAVATION SUPPORT SYSTEMS

A. Protection of the excavation against caving or settling of the banks shall be the sole responsibility of the Contractor and shall in accordance with the Trench Excavation Safety Plan. The Contractor shall protect the sides of the excavation by sheeting and bracing as may be necessary. No actions or instructions by the Engineer shall be regarded as the responsibility for security of the surrounding areas. Furnish, put in place, and maintain sheeting and bracing required to support the sides of the excavation and prevent loss of ground which could damage or delay the work or endanger workers, adjacent structures or vehicular traffic. If the Engineer is of the opinion that at any points sufficient or proper supports have not been provided, he may order additional supports put in, and compliance with such order shall not relieve or release the Contractor from the responsibility for the sufficiency of such supports.

B. Sheeting, Shoring and Bracing:
   1. Provide sheeting, shoring, and bracing of excavations at locations shown on the Drawings and where required to properly and safely complete the work. Construct sheeting, shoring, and bracing to prevent the excavation from extending beyond specified or indicated limits, to protect adjacent structures or improvements and

to protect workmen and the public. The design of sheeting, shoring, and bracing shall be the responsibility of the Contractor.

2. Care shall be taken to prevent voids outside the sheeting. If voids are formed, they shall immediately be filled and compacted.
3. After completion of the structure, all sheeting, shoring, and bracing shall be removed unless approval has been granted by the Engineer, in writing, to leave any or all of it in place. The sheeting, shoring, and bracing shall be removed as excavations are backfilled in a manner that will prevent injurious caving of the excavation or damage to the structure.
4. Voids left or caused by removal of sheeting shall immediately be filled with suitable material and compacted.

C. Sheeting and bracing not left in place shall be carefully removed in such manner as not to endanger the construction or other existing structures, utilities, or property. Voids left or caused by withdrawal of sheeting shall be immediately refilled with sand by ramming with tools especially adapted to that purpose, by watering or otherwise as may be directed.

D. The right of the Engineer to order sheeting and bracing left in place shall not be construed as creating any obligation on his part to issue such orders, and his failure to exercise his right to do so, shall not relieve the Contractor from liability for damages to persons or property occurring from or upon the work occasioned by negligence or otherwise growing out of a failure on the part of the Contractor to leave in place sufficient sheeting and bracing to prevent any caving or moving of the ground.

3.3 CLEARING, GRUBBING & SITE PREP

A. Remove all building foundations, slabs, fences, and other structure from within the project limits as required by the plans. Vegetation and all underbrush shall be stripped and removed from the site. Remove all trees that are required for construction. Trees that will not conflict with construction shall remain, as directed by the Engineer. All underbrush shall be removed.

B. Roots, stumps and other debris shall be removed from site. Depressions resulting from removal of stumps, roots and debris shall be filled with suitable materials and compacted to make surface conform to surrounding ground.

C. Timber, logs, stumps, roots, brush and other refuse from clearing and grubbing operations shall be disposed of by the Contractor in a manner approved by the Engineer.

D. Clearing, grubbing and stripping limits shall be as follows unless otherwise specified elsewhere, but not to extend beyond project limits.

1. Excavation Excluding Trenches: 5 feet beyond top of cut slope.
2. Trench Excavation: 4 feet from trench centerline, or one half the actual trench width, plus 2 feet whichever is greater.
3. Fill:
    a. Clearing and Grubbing: 5 feet beyond toe of permanent fill.
    b. Stripping and Scalping: 5 feet beyond toe of permanent fill.
4. Excess Excavation Material Disposal:
    a. Clearing: 5 feet beyond perimeter.
    b. Scalping and Stripping: 5 feet beyond perimeter.
    c. Grubbing: Around perimeter as necessary for neat finished appearance.

5. Structures: 15 feet outside new structures.
6. Roadways: Right-of- way width.
7. Other Areas: As shown on Drawings

3.4 STRIPPING TOPSOIL

A. Remove existing grass and overburden before excavating topsoil.

B. Prior to beginning excavation or fill, strip the topsoil to a depth of at least 6 inches or to a depth sufficient to remove organic material and stockpile for future use.

C. In general, remove topsoil where structures are to be built, trenches dug, and roads, parking lots, walks, and similar improvements constructed within the area presently covered with topsoil.

D. Store topsoil clear of the construction area.

E. Take reasonable care to prevent the topsoil from becoming mixed with subsoil or eroding.

F. Do not remove topsoil until scalping is completed.

G. Do not remove subsoil with topsoil.

H. Stockpile topsoil in sufficient quantity to meet Project needs. Stockpile excess stripping material in an onsite location approved by the Engineer. All excess topsoil at the end of the project shall be disposed of onsite as directed by the Owner.

3.5 GENERAL EXCAVATION

A. Excavation work shall be unclassified and includes removal of all types of materials encountered without exception. Make excavations to lines and grades indicated on the Drawings. Complete excavations within the tolerances specified.

B. Excavations for structures shall be suitably wide for construction of the structures, including excavation supports, dewatering and drainage systems, and working clearances.

C. Excavation shall be performed in-the-dry, and shall be accomplished by methods which preserve the undisturbed state of subgrade soils. Drainage and dewatering systems shall be in place and operational prior to beginning excavation work. In no case shall the earth be plowed, scraped, or excavated by any means that would disturb the finished subgrade. Hand excavation of the final three inches (3") to six inches (6") inches may be required to obtain a satisfactory, undisturbed subgrade. Subgrade soils which become soft, loose, "quick", or otherwise unsatisfactory for support of structures as a result of inadequate excavation, dewatering, or other construction methods shall be removed and replaced with lean concrete fill at no additional cost to the Owner.

D. When excavations have reached the required subgrade, including any allowances for working mats or base materials, but before the placement of working mats, base materials or embankment materials, notify the soils testing laboratory to verify the suitability of the existing subgrade soils for the anticipated foundation and structural loadings. If the existing

subgrade soils are determined to be unsuitable, direction will be provided by the Engineer regarding removal and replacement with suitable materials.

E. Over-excavation beyond the limits and depths required by the Contract Documents shall be replaced by lean concrete or other material acceptable to the Engineer. Such replacement shall be at no additional cost to the Owner

3.6 STRUCTURAL EXCAVATION

A. Contractor shall be solely responsible for trench and excavation safety systems in accordance with ACT 291 of 1993 and OSHA requirements.

B. Identify required lines, levels, and grades.

C. Identify known underground utilities. Contractor will be responsible for locating utilities.

D. The method of excavation is optional; however, no equipment shall be operated in a manner that will endanger existing structures and their integrity.

E. Use excavation support system such as sheet piling wherever necessary.

F. Allow for forms, working space, granular base, and finish topsoil

G. Do not carry excavation for footings and slab deeper than the elevation shown on Drawings after allowing for base material. Over-excavation beyond the limits and depths required by the Contract Documents shall be replaced by lean concrete or other material acceptable to the Engineer. Such replacement shall be at no additional cost to the Owner.

H. If undercutting occurs below the planned dirt grade, the same fill material as specified for backfill shall be placed and compacted to 95 Percent Standard Proctor Density as defined in this Section up to the planned dirt grade in 8-inch lifts. Do not attempt to over compact excessively wet soil. Allow to dry first by scarifying and aerating before remolding.

I. Wherever practicable, cut all footing excavations to neat lines with a tolerance of minus one-inch (-1") to 0-inch (0"), and place concrete to bear against earth sides. Where beams are shown to be monolithic with slabs on ground, shape soil to the profile shown. Excavate a sufficient distance from walls, shafts, or similar elements of structures to allow for placing and removing forms and for inspection.

J. Excavate to the elevations shown on the drawings forming a level undisturbed surface free of mud or other soft material. When the bottom of the excavation, at the elevation shown, is not within the foundation bearing material shown on the drawings or is unsuitable for foundation bearing, notify the Engineer.

3.7 DEWATERING EXCAVATION

A. Remove water during periods when concrete is being deposited, pipe is being laid, and placing of backfill unless water settling is required, and at other times as required for efficient and safe execution of the work.

B. Accomplish removal of groundwater in a manner that will preserve the strength of the foundation soils, will not cause instability of the excavation slopes, and will not result in damage to existing structures.

C. Where necessary to these purposes, lower the water level in advance of excavation, utilizing wells, well points, or similar methods.

D. Maintain the water level in the gravel stratum as measured in piezometers, a minimum of 3 feet below the prevailing excavation level or as needed to prevent bottom heave of the excavation.

E. Open pumping, sumps, and ditches: If these result in boils, loss of fines, softening of the ground or instability of slopes, areas shall not be accepted.

F. Install wells and well points with suitable screens and filters so that continuous pumping of fines does not occur.

G. Operate well points continuously to prevent boils and loss of consolidation.

H. Arrange discharge to facilitate collection of samples by Engineer.

I. Avoid settlement or damage to adjacent property.

J. Dispose of water in a manner that will not damage adjacent property, as approved.

K. No additional payment will be made for dewatering.

3.8 EMBANKMENTS

A. After clearing and grubbing and before placing any fill, proof roll the foundation with a loaded tandem-axel dump truck weighing at least 25 tons to locate any soft or unstable zones. Any unstable soils should be over excavated and replaced with an approved low volume changes soil as approved.

B. Prior to any filling operations, samples of the proposed borrow and on-site materials proposed for use in the embankments should be obtained for laboratory moisture- density testing. The tests will provide a basis for evaluation of field compaction by in-place density tests during fill operations to evaluate those proper levels of compaction, including dry unit weight and moisture content, are being obtained.

3.9 SLABS ON GRADE

A. See Drawings and General Notes for additional requirements for Slabs on Grade. Should the requirements shown on the Drawings/General Notes differ, the more stringent/costly shall apply and be included in the Bid.

B. Subgrade. Scarify to a depth of six inches (8") below the cleared depth. Adjust moisture content within a range of optimum to optimum + 4 percentage points and recompact within a range of 95 to 100 percent maximum density as determined by ASTM D 698. The recompacted subgrade shall be proof-rolled with a pneumatic tired roller in order to detect any soft areas. Soft or wet areas will require removal and replacement with select material

of at least (12") compacted thickness (2 lifts). Depressions from stump removal shall be cleaned of all organic matter and filled with select material.

C. Fill. Upon completion of subgrade preparation, place select material in uniform layers of loose material, six inches (6") in depth, within the moisture and density range specified in 1. above. Previous lifts and/or subgrade should be protected from moisture loss.

D. Compaction:
1. The subgrade and fill material shall be compacted to a minimum of 95 percent and maximum of 100 percent of maximum density at 0 to 4% above optimum moisture as determined by ASTM D698. The methods used to secure the specified compaction and moisture content shall be the Contractor's responsibility. Wet soils shall be worked by plowing, disking, or scarifying and air drying as required to reduce the moisture content to optimum levels.
2. The compacting equipment and method of compaction shall be such that uniform density will be obtained over the entire area and depth of material being compacted. All fill materials deposited in place by scrapers, dump trucks, drag lines or similar equipment shall be thoroughly broken up before being spread into uniform layers.
3. Moisten layers between lifts to achieve bonding.
4. Field density tests shall be performed at a rate of 1 test per each 500 cubic yards (500 cy) of material placed with a minimum of three tests per lift.

E. Vapor Barrier Membrane
1. As soon as practical after final grading, while the base material is still at its optimum moisture content, install a vapor barrier membrane over the prepared surface at all locations. Provide membrane in the widest practical seamless widths.
2. Lay the membrane material continuous with the joints lapped (6") in the direction of the concrete placement. Carefully fit the membrane tight around all penetrations.
3. Before placing concrete, patch all holes and tears in membrane with patches cemented in place with adhesive. Seal around penetrations for conduit, piping, etc., with cold mastic.

3.10 SLABS BELOW GRADE

A. See Drawings and General Notes for additional requirements for Slabs on Grade. Should the requirements shown on the Drawings/General Notes differ, the more stringent/costly shall apply and be included in the Bid.

B. Excavate to (12") above final sub-grade. In order to preserve the in situ moisture of the subgrade, do not excavate the final (12") until prior to the floor slab construction or seal slab, where specified. If the soil at the time of final exposure and concrete placement is not within zero to four percent above optimum moisture content as determined by the Engineer testing laboratory, the top (6") shall be recompacted at the proper moisture level. Soft and wet areas not achieving compaction

C. Fill. Upon completion of subgrade preparation, place select material in uniform layers of loose material, six inches (6") in depth, within the moisture and density range specified in 1. above. Previous lifts and/or subgrade should be protected from moisture loss.

D. Compaction:
1. The subgrade and fill material shall be compacted to a minimum of 95 percent and maximum of 100 percent of maximum density at 0 to 4% above optimum moisture as determined by ASTM D698. The methods used to secure the specified compaction and moisture content shall be the Contractor's responsibility. Wet soils shall be worked by plowing, disking, or scarifying and air drying as required to reduce the moisture content to optimum levels.
2. The compacting equipment and method of compaction shall be such that uniform density will be obtained over the entire area and depth of material being compacted. All fill materials deposited in place by scrapers, dump trucks, drag lines or similar equipment shall be thoroughly broken up before being spread into uniform layers.
3. Moisten layers between lifts to achieve bonding.
4. Field density tests shall be performed at a rate of 1 test per each 500 cubic yards (500 cy) of material placed with a minimum of three tests per lift.

E. Vapor Barrier Membrane
1. As soon as practical after final grading, while the base material is still at its optimum moisture content, install a vapor barrier membrane over the prepared surface at all locations. Provide membrane in the widest practical seamless widths.
2. Lay the membrane material continuous with the joints lapped (6") in the direction of the concrete placement. Carefully fit the membrane tight around all penetrations.
3. Before placing concrete, patch all holes and tears in membrane with patches cemented in place with adhesive. Seal around penetrations for conduit, piping, etc., with cold mastic.

3.11 EMBANKMENTS

A. After performing the proof roll on the subgrade, scarify the exposed subgrade to a depth of 8 inches. Adjust the scarified soil to a workable moisture content that is above its optimum value to not more than 4 percent above optimum, as determined by test method ASTM D-698. Compact the soil to at least 95 percent of its maximum dry density.

B. Compaction:
1. Place loose fill in 8 inches or less thickness. The subgrade and fill material shall be compacted to a minimum of 95 percent and maximum of 100 percent of maximum density at 0 to 4% above optimum moisture as determined by ASTM D698. The methods used to secure the specified compaction and moisture content shall be the Contractor's responsibility. Wet soils shall be worked by plowing, disking, or scarifying and air drying as required to reduce the moisture content to optimum levels.
2. The compacting equipment and method of compaction shall be such that uniform density will be obtained over the entire area and depth of material being compacted. All fill materials deposited in place by scrapers, dump trucks, drag lines or similar equipment shall be thoroughly broken up before being spread into uniform layers.
3. Moisten layers between lifts to achieve bonding.
4. Field density tests shall be performed at a rate of 1 test per each 500 cubic yards (500 cy) of material placed with a minimum of three tests per lift.

3.12 GRANULAR FILL MATERIAL UNDER FACILITIES

A. Place granular material within the influence area beneath slabs, walks, structures, roads, and parking areas, as shown on the Drawings.

B. Do not exceed loose lifts of 6 inches.

C. Compact each lift to not less than 95 percent Modified Proctor Density.

D. Place and compact a 6-inch layer of granular fill to at least 95 percent Modified Proctor density immediately beneath spread footings, slabs on grade, or other concrete structures.

E. Moisten material as required to aid compaction

F. Place material in horizontal lifts and in a manner to avoid segregation.

G. Correct and repair subsequent damage to slabs, piping, concrete structures, facilities, or other structures caused by settlement of fill material.

3.13 BACKFILL AROUND STRUCTURES

A. Place backfill as promptly as practicable after completion of each structure or portion of a structure. The bottom 1/4 of wall height may be backfilled when the walls attain 75 percent of the specified 28-day compressive strength. The remaining wall height may be backfilled when the specified 28-day compressive strength is attained. Remove concrete forms before starting backfill and remove shoring and bracing as the work progresses. Take care to prevent any wedging action of backfill against the structure. Step-cut the slopes at 0.91 m (3') intervals bounding the excavation as required to prevent wedging.

B. Do not place backfill against walls until:
   1. Walls have been cast full height of structure and concrete has reached the specified strength.
   2. Connecting slabs and beams have been cast and concrete has reached the specified strength.

C. Prior to backfilling:
   1. Remove all forms
   2. Clean all trash and debris from the excavation site.

D. After inspection of foundation, walls, and pipes, place backfill symmetrically around structures to prevent eccentric loading of structures.

E. In all cases where embankment or fill is to be placed on ground surface steeper than 1 vertical to 4 horizontal, the surface shall be plowed, benched or broken up in such a manner that fill material will bind with the existing surface. Remove form materials and trash from excavation before placing backfill.

F. Do not operate earth-moving equipment within 5 feet of walls of concrete structures for the purpose of depositing or compacting backfill material.

G. Compact backfill adjacent to concrete walls with hand-operated tampers or similar equipment that will not damage the structure.

H. Backfill water-holding basins only after satisfactory leakage tests have been conducted.

I. Place earth fill in areas not designated to be structural fill or granular fill.

J. Deposit material in maximum 6-inch loose lifts in uniform layers wet or dry the material to 0 to 4 percent above optimum moisture content. Compact with power-driven hand tampers to the prescribed density.
   1. Regular and Select Material. Place in (6") maximum layers, loose measure. Compact to at least 95 percent of maximum soil density as determined by ASTM D 698.
   2. Sand and Filter Material. Place in (6") maximum layers, loose measure. Compact to not less than 70 percent of maximum soil density as determined by ASTM 4253 and 4254.
   3. On-Site Soil for Use as Backfill: On-site soil that is used as backfill shall be compacted to between 92 and 97 percent of the maximum dry density as determined by the Standard Proctor test, ASTM D 698.

K. Guard rails, curbing, signs, lighting, and fencing etc., in the vicinity of the Contractor's operations shall be adequately protected, and if necessary, removed and restored after backfilling. Curbing, fencing, or guard rails which are damaged during construction shall be replaced with material fully equal to that existing prior to construction.

3.14 FILL NOT BENEATH STRUCTURES OR FACILITIES

A. Place earth fill to the lines and grades shown or as noted in the Drawings / General Notes.

B. Place fill material in maximum 6-inch loose lifts and compact each lift to not less than 95 Percent Standard Proctor.

C. Make proper allowance for topsoil where required.

3.15 MOISTURE CONTROL

A. During compacting operations, maintain optimum practicable moisture content required for compaction purposes in each lift of fill.

B. Maintain moisture content uniform throughout the lift.

C. Add water to the material at the site of excavation. Supplement, if required, by sprinkling the fill.

D. At the time of compaction, maintain the water content of the material at optimum moisture content, plus 4 percentage points, except as otherwise specified for embankments.

E. Do not attempt to compact fill material that contains excessive moisture.

F. Aerate material by blading, discing, harrowing, or other methods, to hasten the drying process.

3.16 FIELD DENSITY TESTS

A. Test Methods: ASTM D2922, D1556, D2216, and D3017.

B. Cooperate with testing work by leveling small test areas designated by the Engineer.

C. Should the requirements shown on the Drawings or other specification sections conflict with this section, the more stringent/costly shall apply and be bid by the Contractor.

D. Engineer may order testing of lift of fill at any time, location, or elevation.

E. Field density test shall be performed as follows:
   1. Structure Excavation, Filling and Backfilling
      a. One (1) in-place density test and one (1) in-place moisture test per 600 square yards per lift, but no more than 10 tests per lift and no less than one (1) test per lift.
      b. One (1) in-place density test and one (1) in-place moisture test per 600 square yards per lift in sub-areas enclosed by interior grade beams or interior stem walls prior to placement of fill, but not less than one (1) per lift.
      c. In-place density and moisture tests within the structure (a) may be utilized as the in-place density and moisture tests indicated in (b) if they happen to coincide within the sub-area.
   2. Trench Excavation and Backfilling
      a. One (1) in-place density test and one (1) in-place moisture test per 100 linear feet of trench per lift under structures and paved areas.
      b. One (1) in-place density test and one (1) in-place moisture test per 300 linear feet of trench per lift under grassed or non-traffic areas.
   3. Site Grading:
      a. Excavation, filling and raw sub-grade and base course preparation under paved areas: One (1) in-place density test and one (1) in-place moisture test per 2,000 square yards per lift.
      b. Excavation, filling and raw sub-grade preparation under grassed or non-traffic areas: One (1) in-place density test and one (1) in-place moisture test per 3,000 square yards per lift.
      c. Additional in-place moisture-density tests and relative density tests shall be performed as directed by the Engineer.

3.17 SITE GRADING

A. Perform earthwork to lines and grades as shown on Drawings with proper allowance for topsoil where specified or shown on Drawings.

B. Shape, trim, and finish slopes to conform with the lines, grades, and cross sections shown.

C. Slopes shall be free of loose exposed roots and stones exceeding 3-inch diameter.

D. Round tops of banks to circular curbs, in general, not less than a 6-foot radius.

E. Neatly and smoothly trim rounded surfaces; over-excavating and backfilling to the proper grade are not acceptable.

F. Repair and reestablish grades to required elevations and slopes due to any settlement or erosion that may occur from action of the elements or any other cause prior to final acceptance.

G. Finish site grading shall be reviewed by the Engineer.

3.18 FINISH GRADING

A. Rough grade compacted fill allowing for a maximum amount of natural settlement and compact. Eliminate uneven areas and low spots. Remove debris, roots, branches, stones, etc., in excess of three inches in size. Remove fill material which has been contaminated with petroleum products.

B. Compact areas which are to receive paving or stabilizing base to subgrade elevation, and to at least 95 percent and not more than 98 percent maximum dry density. Moisture shall be between optimum and 4 percent above optimum.

C. Bring compacted fills to required levels, profiles and contours. Make changes in the grade gradually. Blend slopes into level areas.

D. Slope grades away from structures minimum 6 inches in 10 feet unless otherwise indicated on Drawings.

E. Where fill to required subgrade elevation is less than 6 inches, scarify to a depth of 6 inches and compact prior to placement of fill.

F. Cultivate subgrade to a depth of 6 inches where topsoil is to be placed. Repeat cultivation in areas where equipment, used for hauling and spreading topsoil, has compacted subgrades.

3.19 PLACING TOPSOIL

A. Place in minimum four inches depth up to finished grade elevations.

B. Use topsoil in relatively dry state. Place during dry weather.

C. Fine grade topsoil eliminating rough and low areas to ensure positive drainage. Maintain levels, profiles and contours of subgrades. Rake until surfaces are smooth.

D. Remove stone, roots, grass, weeds, debris and other foreign material while spreading.

E. Manually spread topsoil around trees, plants, and building to prevent damage which may be caused by grading equipment.

F. Lightly compact, 90% minimum of maximum dry density as defined by ASTM D698, (Standard Proctor) zero to 4% above optimum moisture, topsoil after placing.

3.20 EXCAVATED MATERIALS

A. Excavated material to be used for backfilling and finish grading shall be placed adjacent to the work, without excessive surcharge on the trench bank and separate from stockpiled

topsoil and grass. Material shall not obstruct free access to valves and hydrants and not obstruct the operation of other contractors working at the site. Obstructing traffic with excavated material will not be allowed.

B. Excess material and material which is unsuitable for backfilling shall be removed from the site by the Contractor.

C. Should conditions make it impracticable or unsafe to stack material adjacent to the trench, the material shall be hauled and stored at a location provided by the Contractor at no additional cost to the Owner.

3.21 DISPOSAL OF EXCESS EXCAVATION

A. Disposal of any material on the project site shall be approved by the engineer. It should not be assumed during bidding that excess material may be disposed onsite unless specifically allowed in the Contract Document.

B. If allowed, dispose of excess excavated materials, not required or suitable for use as backfill or fill, outside of the area of work.

C. Compact excess material as specified for fill, dress the completed disposal area to slopes no greater than 4:1 (horizontal: vertical), and slope to drain.

3.22 SETTLEMENT AND FINAL GRADE REQUIREMENTS

A. The finished surface shall not vary more than 0.10 foot from the established grade and cross section and shall be free of depressed areas where water would pond.

B. Settlement in backfill, fill, or in structures built over the backfill or fill, that may occur within the 1-year guarantee period in the General Conditions shall be considered to be caused by improper compaction methods.

C. Restore structures damaged by settlement to original condition.

3.23 PROTECTION

A. Finish grades of backfills, cuts, excavations, and fills:
   1. Protect newly graded areas from erosion and deterioration by action of the elements.

B. Ditches and gutters:
   1. Maintain ditches and gutters free from detrimental quantities of debris that might inhibit drainage until final acceptance.

END OF SECTION

SECTION 31_05_19

GEOSYNTHETICS FOR EARTHWORK

PART 1 GENERAL

1.1 SCOPE OF WORK

A. Provide synthetic geotextile fabric and geo-grid for stabilizing soil as shown on Drawing and as specified herein.

1.2 DELIVERY, HANDLING AND STORAGE

A. During shipment and storage fabric shall be wrapped in a heavy-duty protective covering to protect fabric from direct sunlight, mud, dust, dirt, and debris.

B. Protect geo-grid from damage.

PART 2 PRODUCTS (NOT USED)

2.1 GEOTECTILE FABRICS

A. Fabric: US Fabrics 135NW 5.0 oz Non woven, needle punched polypropylene, composed of strong rot-proof synthetic fibers and be a pervious sheet of synthetic fibers oriented into a stable network so that fibers retain their relative position with respect to each other. Edges of fabric shall be finished to prevent outer yarn from pulling away from fabric.

B. Geogrid: Tensar TX5 or approved equal
   1. Geogrid shall be placed at the interface of the subgrade and base material as indicated on the Drawings.
   2. Geogrid shall be installed in accordance with the installation guidelines provided by the manufacturer or as directed by the Engineer.
   3. Geogrid may be temporarily secured in place with ties, staples, pins, sand bags, or backfill as required by fill properties, fill placement procedures, weather conditions, or as directed by the Engineer.
   4. If 2 rolls of geogrid are to be placed side by side or end to end, overlap them based on the California Bearing Ratio (CBR) as recommended by the manufacturer. Care should be taken to ensure that the geogrid sections do not separate at the overlaps during construction.

C. Provide certificates from producer, supplier or an approved independent testing laboratory certifying that the fabric complies with the requirements of this Section.

PART 3 EXECUTION

3.1 PLACEMENT

A. Engineer shall inspect the placement of geotextile fabric prior to coverage of granular base course materials.

B. Subgrade shall be prepared as specified in other sections, unless the material within isolated areas is of a nature that will not readily compact. In this case, subgrade within these isolated areas shall be graded to the lines, grades, and cross sections as shown on Drawings.

C. Geotextile fabric shall be oriented such that the toll length runs parallel to the centerline. Adjacent rolls shall be overlapped a minimum of 3 feet, and shall be tied together at 15 foot intervals using suitable plastic ties. Care shall be taken to ensure that the geo-grid sections do not separate during construction. Placement of geo-grid around corners may require cutting and diagonal lapping. Geotextile fabric and geo-grid shall be pinned at the beginning of roll, but shall be left free elsewhere to relieve wrinkles or folds in the material during placement of base material.

D. Base course shall be spread by end dumping and grading the material to the thickness as shown on Drawings. Construction traffic shall not be allowed on reinforcement system until a minimum thickness of 4 inches of base course is in place.

END OF SECTION

SECTION 31_23_23.33

FLOWABLE FILL

PART 1 GENERAL

1.1 SCOPE OF WORK

A. Installation of flowable fill in areas indicated on the drawings.

1.2 SUBMITTALS

A. Submit a flowable fill mix design prior to installation

PART 2 PRODUCTS

2.1 DESIGN REQUIREMENTS

A. Compressive strength not less than 50 psi at 3 days or 75 psi at 28 days.

B. Strength shall not exceed 300 psi at 28 days.

C. Properties will be lab measurement only and will not be tested in the field.

2.2 MATERIALS REQUIREMENTS

A. Consist of a mixture of Portland cement (Type I), granular material/fine aggregate, fly ash, and water.

B. Fine aggregate shall meet ODOT standards with 100% passing the 3/8 sieve and no more than 15% passing the #200 sieve.

C. Air-entraining admixtures and performance enhancers may be submitted for approval if specified by Engineer or are necessary for specific project requirements

D. Mixture shall consist of the following approximate proportions.

1.	Portland Cement (Type 1)	50 lbs/CY
2.	Fine Aggregate	3,400 lbs/CY
3.	Fly Ash (Class F)	250 lbs/CY
4.	Water as needed to provide flowable self-leveling properties	

PART 3 EXECUTION

3.1 INSTALLATION

A. The temperature of the flowable fill mix, as it is manufactured and delivered, shall be at least 50° F.

B. Twenty-four hours shall elapse from start to start of each subsequent placement.

C. No placement of flowable fill will be allowed if the anticipated air temperature will be 35° F (17° C) or less in the 24-hour period following proposed placement.

D. During placement operations around manholes and in utility trenches, care shall be used to avoid dislocating any pipes due to fluid pressure from the flowable fill by even placing of the material. Any pipes within the backfill area should be considered for securing to avoid buoyant effect of flowable fill.

E. When flowable fill is used in pavement cuts, the fill shall be placed to the top of pavement. After setting, the flowable fill shall be removed to the bottom of a concrete pavement patch or to the top of the bituminous base course.

END OF SECTION

SECTION 31_23_24

UTILITY EARTHWORK & BACKFILL

PART 1 GENERAL

1.1 SUMMARY

A. Excavating, trenching, backfilling and compacting for water distribution mains, sanitary sewers, manholes and other utility systems and appurtenances, and the disposal of excess excavated material.

B. Provide the services of a licensed Professional Engineer registered in the State of Oklahoma to prepare temporary excavation support system designs and submittals as necessary.

C. Furnish and install temporary excavation support and safety systems, including sheeting, shoring and bracing, to ensure the safety of personnel and protect adjacent structures, piping, etc., and meet appropriate requirements established in the Occupational Safety and Health Administration (OSHA) Safety and Health Regulations, Part 1926, Subpart P-Excavations, Trenching and Shoring, and other applicable regulations.

D. Perform excavation regardless of type, nature, or condition of materials encountered.

E. Excavation, regardless of material encountered, shall conform to the dimensions and elevations indicated on the drawings.

F. There will be no extra compensation for dewatering unless specifically outlined on the drawings, bid proposal or Basic Requirements. Cost to be included in associated items of work.

G. There will be no addition compensation for rock removal unless specifically outlined on the drawings, bid proposal or Basic Requirements. Cost to be included in associated items of work.

H. Blasting will not be permitted as a means of excavation

I. Prior to any excavation work, Contractor shall contact OKIE (1 800-CALL-OKIE) as well as all utility Owners within the work site.

J. Backfill shall include the refilling and consolidation of the fill in the trenches and excavations up to the surrounding ground surface or road grade at crossing. The backfill from the trench bottom to 12-inches above the top of the pipes and conduit when laid to the grade including the bedding layer sustaining the pipeline as shown on the drawings is termed "embedment". Backfill above the embedment is termed "final backfill".

K. Should the requirements shown on the Drawings or other specification sections conflict with this section, the more stringent/costly shall apply and shall be bid by the Contractor.

1.2 RELATED SECTIONS

A. Section 01_00_01 Basic Requirements

B. Section 01_33_01 General Submittal Requirements

C. Section 31_41_33 Trench Shielding

D. Section 33_05_09.34

E. The Contract Documents are a complete unit and complementary to each other. The individual Specification sections and other Contract Documents do not contain all cross references to "related work" or "related sections." It is the Contractor's responsibility to review the complete Contract Documents in order to properly scope, schedule and coordinate the work of any/all subcontractors, suppliers, and others on this project. Anything called out in one location of the Contract Documents is binding as if it were called out in all sections of the Contract Documents.

1.3 SUBMITTALS

A. Submittals for products and miscellaneous items in this specification section shall be submitted in accordance with Section 01_33_01 General Submittal Requirements and related submittal sections and provisions of the Contract Documents.

B. Submit testing laboratory reports, as specified or required, to show compliance with specifications for materials. Certified Test Reports shall be from an independent laboratory paid for by the Contractor. Test reports shall include sieve analysis, soil classification, percentage of wear, Atterberg limits, and soil resistivity tests for embedment material.

C. Any submittals required for trench safety plan, dewatering and drainage plans, and similar temporary facilities, will be for reference purposes only and maintained for record purposes in the Engineer files. Submittal of these items will not relieve the Contractor of any responsibility for the adequacy of support, safety, dewatering, and drainage systems.

D. Submit details of excavation plans designed and prepared by a licensed Professional Engineer, who is registered in the State of Oklahoma and has experience in soils engineering, for all structure excavation. The plans shall include details of any proposed shoring systems, systems to protect existing facilities, slope stability monitoring, and the Contractor's means and methods for controlling groundwater. The plans shall be submitted to the Engineer for record purposes prior to proceeding with any excavation work.

1.4 REFERENCE STANDARDS

A. American Association of State Highway and Transportation Officials
   1. AASHTO T-180 - Standard Method of Test for Moisture-Density Relations of Soils Using a 10-lb Rammer and a 18-in. Drop

B. American National Standards Institute/American Society for Testing and Materials (ANSI/ASTM) latest version.
   1. ASTM C33 - Standard Specification for Concrete Aggregate.

2. ASTM C40 - Standard Test Method for Organic Impurities in Fine Aggregates for Concrete.
3. ASTM C136 - Standard Test Method for Sieve Analysis of Fine and Coarse Aggregate.
4. ASTM C150 - Standard Specification for Portland Cement.
5. ASTM D75 - Sampling Aggregates.
6. ASTM D698 - Standard Test Methods for Laboratory Compaction Characteristics of Soil Using Standard Effort (12 400 ft-lb/ft^3 (600 kN-mm/m^3))
7. ASTM D1557 - Standard Test Methods for Laboratory Compacion Characteristics of Soil Using Modified Effort (56,00 ft-lb/ft^3 (2,700 kN-m/m^3))
8. ASTM D2922 - Density of Soil and Soil-Aggregate in Place by Nuclear Methods (Shallow Depth).
9. ASTM D4253 - Maximum Index Density of Soils Using a Vibratory Table
10. ASTM D4254 - Minimum Index Density of Soils and Calculation of Relative Density.
11. ASTM D4318 - Standard Test Method for Liquid Limit, Plastic Limit and Plasticity Index of Soils.

C. ODOT Standard Specifications for Construction and Maintenance of Highways, Streets, and Bridges (2014) - Oklahoma, Department of Transportation (ODOT).

1.5 QUALITY ASSURANCE

A. Materials shall be tested and observed as described in the following paragraphs. Allow free access to the work for selection of materials and observation.
   1. Before and during placement of fill and backfill, the soils testing laboratory shall provide at least one density and moisture content test for each 2,500 ft^2 of surface area of trench/backfill for each compacted lift of fill or more stringent as may be stated elsewhere.

B. All work outlined in accordance shall be in full conformance with the approved Stormwater Pollution Prevention Plan (SWPPP). See Section 00_01_01 – Basic Requirements.

1.6 SPECIAL DESIGN REQUIREMENTS

A. Earthen backfill material shall be Class III or Class IV as outlined in Table 2 of ASTM D2321.

B. Pipe bedding materials shall be Class II as outlined in Table 2 of ASTM D2321.

1.7 INSPECTION OF EXCAVATIONS

A. Do not place reinforcing steel or concrete in the excavation prior to inspection unless the Engineer's Representative has given approval to proceed without inspection.

1.8 DESIGN REQUIREMENTS

A. Plans indicate the grades required for the construction of project. Contractor shall stake / layout work required.

1.9 PROTECTION OF FACILITIES

A. Existing utility lines (either overhead or underground) and pavement dictated to remain shall be kept free of damage from Contractor's operations. If damaged, any utilities or pavement shall be restored at the Contractor's expense.

B. Before the start of earthwork operations, adequately protect utilities, trees, shrubs, and other permanent objects. Repair costs resulting from damage to permanent facilities will be borne by the Contractor.

C. Provide surface drainage during the period of construction to protect the work and to avoid nuisance to adjoining property.

D. The Contractor shall conduct his operations in such fashion that trucks and other vehicles do not create a dirt nuisance in the streets. The truck beds shall be sufficiently tight, and shall be loaded in such a manner that objectionable materials will not be spilled onto the streets. Any dirt, mud, or other materials that are spilled onto the streets or deposited onto the streets by the tires of vehicles shall be promptly cleared away by the Contractor.

1.10 PROTECTION AND/OR REMOVAL OF UTILITY LINES

A. The Contractor shall anticipate all underground and above ground obstructions such as, but not limited to, water mains, gas lines, storm and sanitary sewers, telephone or electric light or power ducts, concrete, and debris.
   1. It shall be the responsibility of the Contractor to verify the existence and location of all underground and above ground utilities along the route of the work.
   2. Any such lines or obstructions indicated on the Drawings show only the approximate locations and shall be verified in the field by the Contractor.
   3. The Owner and Engineer will endeavor to familiarize the Contractor with all known utilities and obstructions, but this shall not relieve the Contractor from full responsibility in anticipating all underground and above ground obstructions whether or not shown on the Plans.
   4. The omission from or the inclusion of utility locations on the Drawings is not to be considered as the non-existence of, or a definite location of existing utilities.

B. The Contractor shall, at his own expense, maintain in proper working order and without interruption of service all existing utilities and services which may be encountered in the work.
   1. With the consent of the Engineer and utility owner such service connections may be temporarily interrupted to permit the Contractor to remove designated lines or to make temporary changes in the locations of services.
   2. The cost of making any temporary changes shall be at the Contractor's expense.

C. The Contractor will take the necessary precautions to protect existing utilities from damage due to his operations.

D. Any damage to the utilities will be repaired at the Contractor's expense.

E. Notify all utility companies involved to have their utilities located and marked in the field.
   1. All underground utilities shall then be uncovered to verify location and elevation before construction begins.

2. The Contractor shall obtain all necessary permits.

F. Utility Spacing: The spacing for utility lines shall meet the installation requirements and the requirements of TCEQ.

1.11 SUBSURFACE UTILITY ENGINEERING

A. Provide Subsurface Utility Engineering in accordance with 02_21_20 Subsurface Utility Engineering.

B. Following completion of pipe laying, maintain paved surfaces, unpaved trench surfaces, fences, curbs, sidewalks, and gutters, for a period of twelve (12) months from final acceptance. Material and labor required for the maintenance shall be supplied by the Contractor, and the work shall be done in a manner satisfactory to Owner. Maintenance shall include repair of any trench settlement and any damages to structures or paving due to trench settlement or workmanship.

PART 2 PRODUCTS

2.1 WATER

A. Use water from a source acceptable to Engineer in accordance with Basic Requirements.

2.2 MATERIALS

A. Crushed Rock Material (#57 & fine)
1. Crushed rock shall consist of sound and durable particles free from injurious amounts of salt, alkali, vegetable matter, or other material either free or as adherent coating.
2. Wear shall not exceed 40 percent when tested in accordance with ODOT testing standards.
3. Crushed rock size shall be Class I per ASTM D1487. ASTM C33, size No. 57 or 67 shall be considered Class I material.
4. Gradation shall meet the following requirements for percentage by weight when tested in accordance with ASTM C136:

a. <u>#57 Crushed Rock</u>

Passing 38.1 mm (1-1/2") sieve	100%
Passing 25.4 mm (1") sieve	95-100%
Passing 12.7 mm (1/2") sieve	25-60%
Passing No. 4 sieve	0-10%
Passing No. 8 sieve	0-5%

b. <u>#67 Crushed Rock</u>

Passing 25.4 mm (1") sieve	100%
Passing 19.0 mm (3/4”) sieve	90-100%
Passing 9.53 mm (3/8") sieve	20-55%
Passing No. 4 sieve	0-10%
Passing No. 8 sieve	0-5%

c. Fine Crushed Rock

Passing 12.7 mm (1/2") sieve	100%
Passing 9.53 mm (3/8") sieve	95-100%
Passing No. 4 sieve	40-65%
Passing No. 8 sieve	0-10%

d. Coarse Crushed Rock

Passing 38.1 mm (1-1/2") sieve	100%
Retained on 19/1 (3/4") sieve	100%

e. Fine crushed rock shall be rounded or sub rounded particles. Fine crushed rock with sharp edges will not be accepted.

B. Flowable Fill
1. See Section 31_23_23.33 – Flowable Fill

C. Final Backfill / Select Excavated Material
1. From 12-inches above the top of the pipe or conduit, the trench or excavation shall be backfilled with select material or excavated material free from rocks with any dimension greater than four inches unless otherwise specified or required elsewhere. The top 6-inches shall be the topsoil which has been placed separately.
2. Unless otherwise indicated on the drawings, no material of a perishable, spongy, or otherwise unsuitable nature, or excessively large rock (largest dimension greater than 4 inches), shall be used in backfilling.

D. Select Backfill Material / Select Fill
1. Where select material is shown or specified, use an approved material, free of organic matter and foreign substances, obtained from an approved off-site source. The material shall have a plasticity index between 7 and 15 and a maximum liquid limit of less than 30 as determined by ASTM D4318, and a maximum of 70 percent passing the No. 200 sieve. Prior to bringing any of the proposed material to the site, submit for review by the Engineer, an analysis of the proposed material, including a moisture-density relationship curve prepared in accordance with ASTM D698 by a certified independent testing laboratory employed and paid by the Contractor.

E. Pea Gravel
1. Natural stone; washed, free of clay, shale, organic matter; graded in accordance with ASTM C136 to the following limits:
2. Minimum Size: ¼ inch
3. Maximum Size: ⅝ inch

F. Sand
1. Sand shall consist of clean, hard, durable, uncoated grains, free from lumps, and organic material.
2. Gradation shall meet the following requirements for percentage by weight when tested in accordance with ASTM C136:

Passing No. 4 sieve	80-100%
Passing No. 8 sieve	65-100%
Passing No. 16 sieve	40-80%

Passing No. 50 sieve	7-40%
Passing No. 100 sieve	2-20%
Passing No. 200 sieve	0-10%

G. Top Soil:
1. Soil suitable for growth of surface cover. Material stripped and stockpiled from site or borrowed from off site.
2. Free from roots, brush, rocks, and other extraneous matter exceeding 1 inch in any direction. Free from weeds
3. Minimum 60% sand, Maximum 30% silts, Maximum 10% clay, no less than 6% and no more than 20% organic matter.
4. Liquid limit range from 15 to 30 and plasticity index from 5 to 40.
5. Submit test data showing compliance with this specification. Include percent weight of constituent material, material particle size, and pH.
6. Testing and Analysis of Subsoil Material: Perform in accordance with ASTM D698.

H. Aggregate Base
1. Blended aggregate base course meeting the requirements of Oklahoma Department of Transportation (Type "A").

2.3 COMPACTION EQUIPMENT

A. Provide compaction equipment of suitable type and adequate to obtain the densities specified.

B. Operate compaction equipment in strict accordance with the manufacturer's instructions and recommendations.

C. Hand-operated equipment shall be capable of achieving the specified densities.

2.4 MOISTURE CONTROL EQUIPMENT

A. Provide equipment for applying water of a type and quality adequate for the work; it shall not leak; and be equipped with a distributor bar or other approved device to assure uniform application.

B. Provide equipment for mixing and drying out material consisting of blades, discs, or other approved equipment.

2.5 WATER REMOVAL EQUIPMENT

A. Provide and operate equipment adequate to keep excavation and trenches free of water as outlined in Section 01_00_01 Basic Requirements.

PART 3 EXECUTION

3.1 EXCAVATION SUPPORT SYSTEMS

A. Protection of the excavation against caving or settling of the banks shall be the sole responsibility of the Contractor. The Contractor shall protect the sides of the excavation by sheeting and bracing as may be necessary. No actions or instructions by the Engineer shall be regarded as the responsibility for security of the surrounding areas. Furnish, put in place, and maintain sheeting and bracing required to support the sides of the excavation and prevent loss of ground which could damage or delay the work or endanger workers, adjacent structures or vehicular traffic. If the Engineer is of the opinion that at any points sufficient or proper supports have not been provided, he may order additional supports put in, and compliance with such order shall not relieve or release the Contractor from the responsibility for the sufficiency of such supports.

B. Sheeting, Shoring and Bracing:
   1. Provide sheeting, shoring, and bracing of excavations where required to properly and safely complete the work. Construct sheeting, shoring, and bracing to prevent the excavation from extending beyond specified or indicated limits, to protect adjacent structures or improvements and to protect workmen and the public. The design of sheeting, shoring, and bracing shall be the responsibility of the Contractor.
   2. Care shall be taken to prevent voids outside the sheeting. If voids are formed, they shall immediately be filled and compacted.
   3. After completion of the structure, all sheeting, shoring, and bracing shall be removed unless approval has been granted by the Engineer, in writing, to leave any or all of it in place. The sheeting, shoring, and bracing shall be removed as excavations are backfilled in a manner that will prevent injurious caving of the excavation or damage to the structure.
   4. Voids left or caused by removal of sheeting shall immediately be filled with suitable material and compacted.

C. Sheeting and bracing not left in place shall be carefully removed in such manner as not to endanger the construction or other existing structures, utilities, or property. Voids left or caused by withdrawal of sheeting shall be immediately refilled with sand by ramming with tools especially adapted to that purpose, by watering or otherwise as may be directed.

D. The right of the Engineer to order sheeting and bracing left in place shall not be construed as creating any obligation on his part to issue such orders, and his failure to exercise his right to do so, shall not relieve the Contractor from liability for damages to persons or property occurring from or upon the work occasioned by negligence or otherwise growing out of a failure on the part of the Contractor to leave in place sufficient sheeting and bracing to prevent any caving or moving of the ground.

3.2 CLEARING, GRUBBING & SITE PREP

A. Remove all building foundations, slabs, fences, and other structure from within the project limits as required by the plans. Vegetation and all underbrush shall be stripped and removed from the site. Remove all trees that are required for construction. Trees that will not conflict with construction shall remain, as directed by the Engineer. All underbrush shall be removed.

B. Roots, stumps and other debris shall be removed from site. Depressions resulting from removal of stumps, roots and debris shall be filled with suitable materials and compacted to make surface conform to surrounding ground.

C. Timber, logs, stumps, roots, brush and other refuse from clearing and grubbing operations shall be disposed of by the Contractor in a manner approved by the Engineer.

3.3 STRIPPING TOPSOIL

A. Remove existing grass and overburden before excavating topsoil.

B. Prior to beginning excavation or fill, strip the topsoil to a depth of at least 6 inches or to a depth sufficient to remove organic material and stockpile for future use.

C. In general, remove topsoil where structures are to be built, trenches dug, and roads, parking lots, walks, and similar improvements constructed within the area presently covered with topsoil.

D. Store topsoil clear of the construction area.

E. Take reasonable care to prevent the topsoil from becoming mixed with subsoil or eroding.

F. Do not remove topsoil until scalping is completed.

G. Do not remove subsoil with topsoil.

H. Stockpile topsoil in sufficient quantity to meet Project needs. Stockpile excess stripping material in an onsite location approved by the Engineer. All excess topsoil at the end of the project shall be disposed of onsite or removed from site if inadequate area exists for onsite disposal.

3.4 TRENCH EXCAVATION:

A. Trenches shall be excavated to the lines and grades shown on the Drawings with the centerlines of the trenches on the centerlines of the pipes. Measure for grade at the pipe invert, not at the top of the pipe, because of permissible verification in pipe wall thickness.

B. The sides of all trenches shall be vertical to a point one foot above the top of the pipe. Unless otherwise indicated on the Drawings, the trench width shall be as shown on the drawings within a tolerance of +3 inches. Trench width will be measured at an elevation in the trench which is 12-inches above the top of the pipe when laid to grade.

C. Where the normal trench width below the top of the pipe is exceeded for any reason, the Contractor shall, unless the Engineer determines that the pipe being used is strong enough for the actual trench width, furnish an adequate support for the pipe. This may be accomplished by furnishing a stronger pipe or a concrete cradle, next higher-class embedment or encasement, cap or envelope as approved.

D. The trenches shall be excavated to the required depth allowing for the placement of pipe bedding to the thickness shown on the Drawings. The trench bottom shall form a

continuous and uniform bearing and support for the pipe at every point between bell holes, except that the grade may be disturbed for the removal of lifting tackle.

E. Should the bottom of the trench become an unstable foundation for the pipe through the failure of the Contractor to adequately perform, the Contractor shall remove the unstable material and fill the trench to the proper subgrade with standard crushed rock.

F. Should the undisturbed material encountered at the grade depth constitute, in the opinion of the Engineer, an unstable foundation for the pipe, the Contractor is required to remove such unstable material and fill the trench to the proper subgrade with standard crushed rock. Depth of the standard crushed rock will be determined by the Engineer.

G. Bell (Joint) Holes: At the location of each joint, dig bell (joint) holes of ample dimensions in the bottom of the trench and at the sides where necessary to permit easy visual inspection of the entire joint.

H. Minimum pipe burial to the top outside surface of the pipe barrel shall be 3 feet unless otherwise noted.

I. Procedure: Excavate to indicated or specified depths.
   1. Excavate by open cut method.
   2. Dispose of unacceptable backfill material and provide suitable material for backfill without additional expense.
   3. During excavation, stockpile material suitable for backfilling in an orderly manner far enough from the bank of the trench to avoid overloading, slides, or cave-ins.
   4. Grade as necessary to prevent surface water from flowing into trenches or other excavations.
   5. Cut banks of trench as nearly vertical as practical.
      a. Remove stones as necessary to avoid point-bearing.
      b. Over-excavate wet or unstable soil from the trench bottom to permit construction of a more stable bed for pipe.
      c. Over excavation shall be filled and tamped with clean dry sand or other approved material to the required grade.
   6. Excavate the trench to the proper width as shown.
      a. If the trench width below the top of pipe is wider than specified in this Section or shown, install additional backfill.
      b. No additional payment will be made for additional material or work required for installation.
   7. Accurately grade the trench bottom to provide proper bedding as required for pipe installation.
   8. If any excavation is carried beyond the lines and grades required or authorized, the Contractor shall, at his own expense, fill such space with concrete or other suitable material as directed by the Engineer. No additional payment will be made.
   9. Construct trench in accordance with Trench Safety Plan.

J. Sheeting and Bracing:
   1. Refer to Section 31_41_33 Trench Shielding

K. Water in Excavation:
   1. Keep work free from ground or surface water at all times.

2. Provide pumps of adequate capacity or other approved method to remove water from the excavation in such a manner that it will not interfere with the progress of the work or the proper placing of other work.
3. There shall be no additional compensation dewatering.

L. Trenching Progress:
1. Trenching operations shall not be in excess of 100 feet ahead of pipe laying.
2. In rural areas trenching operations may be extended to 300 feet ahead of pipe laying with approval of Engineer.
3. Not more than two (2) consecutive cross-streets may be closed to traffic at any given time.

M. Existing Lawns and Shrubbery:
1. The Contractor shall take particular care to preserve existing lawns and shrubbery.
2. Make minor pipe alignment changes as may be necessary with approval from the Engineer.

N. Existing Pavement:
1. Existing pavement over trenches shall be removed to a width of 6 inches outside of the trench on each side.
2. Remove to a neat line by sawing method.
3. Remove brick pavement by hand, deliver and stack as directed by the Owner.
4. Where no pay items is included on the Bid Form the payment removal shall be included in other items of work.

3.5 EMBEDMENT:

A. Embedment for coated steel pipe, polyethylene wrapped ductile iron pipe, fiberglass reinforced pipe, and all plastic pipe shall be fine crushed rock.

B. Provide pipe bedding material under all pipe for the full width of the trench. Minimum depth of bedding material below the pipe barrel shall be as shown on the Drawings or as specified.

C. Minimum depth of pipe bedding material under the pipe bell shall not be less than 6 inches under normal trench conditions and not less than 6 inches in rock excavation areas. Minimum depth of pipe bedding material below the pipe shall be as shown on the drawings.

D. Placement:
1. Place the pipe bedding or foundation stabilization material for the full width of the trench in layers not exceeding 6 inches deep and compact each layer, until the material does not yield or move to the grade established for the pipe bedding. Where the distance to stable ground is excessive (more than two (2) feet), the Owner reserves the right to order as an extra, in writing, such other types of foundation or pipe supports as deemed necessary.
2. Particular attention must be given to the area of the pipe zone from the flow line to the spring line of the pipe to ensure that firm support is obtained to prevent any lateral movement of the pipe during the final backfilling of the pipe zone.

E. Compaction:

1. Compact embedment materials using vibration or mechanical tamping. Vibration methods shall limit vibration frequency and amplitude to avoid disturbance of adjacent in-situ soils.
2. All embedment materials, which includes material placed in trench bottom for pipe foundation, and all material within the pipe zone shall be compacted to a minimum of 95% of maximum dry density defined by ASTM D698 for cohesive material. For cohesionless material compact to a minimum of 75% of relative density as determined by ASTM D4253 and D4254, whichever is applicable.

3.6 UTILITY INSTALLATION:

A. Utility Lines: Provide a minimum cover over the top of the pipe as indicated. Avoid interference with other utilities. Provide class of bedding as shown. Install piping and appurtenances as specified.

B. Excavation for Appurtenances: Excavate sufficiently for valves, valve boxes, manholes, junction boxes, and similar structures to leave at least 2 feet clear distance between the outer surfaces and the embankment or timber that may be used to hold and protect the banks.

C. Over excavation: Any over-depth excavation below appurtenances not directed will be considered unauthorized and will be refilled with concrete or approved foundation material, as directed by the Engineer, at no additional cost to the Owner. Over excavation shall include over-depth and over-width excavation.

3.7 BACKFILLING:

A. From 12-inches above the top of the pipe, or as shown on the Drawings, the trench or excavation shall be backfilled with select material or excavated material approved by the Engineer. No excavated material or excessively large rocks (largest dimension greater than 4 inches) or debris of any sort are to be placed into the backfill. No appreciable weight of any sort, other than backfill, shall be allowed on the pipe until it has been covered to such a depth that damage to the pipe or joints will not occur. The top six (6) inches of backfill shall be topsoil free from rock outside of paved area.

B. Excavated material which is unsuitable for backfilling and excess material shall be disposed of.

C. Method of Consolidation:
1. The Contractor shall provide a method of consolidation of material 12-inches or more above the pipe. Backfill material shall be compacted in layers from six to eight inches in thickness of loose fill. This material may be placed mechanically or by other means to provide at least 85% ASTM D698 of maximum dry density at 0 to 4 percent above optimum moisture or the compaction indicated on the Drawings. Where the soil PI is less than 20, the compaction moisture content shall be within ± 4% of optimum. Such material shall be tested and approved by the Engineer before continuing.
2. The initial test section shall be a minimum of 100 lineal feet. Material not meeting required compaction shall be removed and replaced at no additional cost to the Owner. See Item 6 below for deep-fill requirements.
3. Jetting and flooding. Not allowed.

4. Backfill under Road, Concrete Slabs, and Related Items. The backfill for trenches under roads, concrete slabs, and related items shall be flowable fill if no specific detail is included in the Drawings.
5. Fill depths between 15' to 25' shall be compacted to 98% ASTM D 698. Fill depths between 25' to 35' shall be compacted to 100% ASTM D698.

D. Contractor shall backfill pipe to preclude floating of the placed pipe. Should floating occur, the Contractor shall remove and reinstall the pipe to a point beyond the area in question identified.

3.8 CONCRETE THRUST BLOCKING

A. Thrust blocking of concrete shall be provided at changes in pipe diameter (reducers), or direction (e.g., tees, bends, elbows, and crosses), plugs and valves on buried piping with unrestrained joints. Thrust blocking shall be placed against undisturbed trench walls and the pipe in such a manner that the blocking will prevent the pipe from moving when subjected to required test pressure.

B. Concrete thrust blocking shall be in place at least five days prior to testing the pipeline/conduit.

C. See Section 33_05_09.34

3.9 DISPOSAL OF EXCESS MATERIAL:

A. Remove waste and excess excavated material from the construction site as feasible.

B. Legally dispose of material at a licensed site or with written and notarized permission from the property owner for a private disposal site.

C. All cost associated with waste material removal and disposal shall be paid for by the Contractor.

3.10 SETTLEMENT AND FINAL GRADE REQUIREMENTS

A. The finished surface shall not vary more than 0.10 foot from the established grade and cross section and shall be free of depressed areas where water would pond.

B. Settlement in backfill, fill, or in structures built over the backfill or fill, that may occur within the 1-year guarantee period in the General Conditions shall be considered to be caused by improper compaction methods.

C. Restore structures damaged by settlement to original condition.

3.11 PROTECTION

A. Finish grades of backfills, cuts, excavations, and fills:
1. Protect newly graded areas from erosion and deterioration by action of the elements.

B. Ditches and gutters:

1. Maintain ditches and gutters free from detrimental quantities of debris that might inhibit drainage until final acceptance.

END OF SECTION

SECTION 31_25_00

EROSION CONTROL

PART 1 GENERAL

1.1 SCOPE OF WORK

A. This section includes implementation of the project's Storm Water Pollution Prevention Plan (SWPPP) and installation, maintenance and removal of erosion and sediment control devices.

B. The Contractor shall furnish all permits, preparation and implementation of a site specific Storm Water Pollution Prevention Plan, notice of intent, notice of termination, labor, equipment, materials, and pay all permit fees as necessary to meet the requirements of the Oklahoma Pollution Discharge Elimination System (OPDES) associated with construction activities under OPDES Construction General Permit for storm water pollution prevention as required by current Federal, State, and Local rules and regulations and any other local agency requirements regarding stormwater discharges and management.

C. The following items shall be submitted for record purposes only. These documents will not be reviewed for compliance with permit requirements. They are including, but not limited to:
1. Storm water pollution prevention plan,
2. Notice of Intent (NOI),
3. Photocopies of permit application fee payment(s), and
4. Notice of Termination (NOT).
5. Notice of Change.

D. The Contractor shall bear sole responsibility for the storm water pollution prevention provisions of this Contact as well as bear sole responsibility for development, implementation, and maintenance of the storm water pollution prevention plan, the best management practices, and the facilities utilized to meet the General Permit requirements. The storm water pollution prevention plan and Notice of Intent shall be completed prior to beginning any work or stockpiling of materials.

E. Regardless of acreage, coverage under the OPDES General Permit is not guaranteed by the submission of an NOI. The Director / staff of the program may require the Contractor to obtain an Individual or Alternative General Permit.

F. The Contractor shall pay all fees, including initial application and renewal fees, associated the OPDES permit application.

G. The Contractor shall pay all costs associated with the development of the storm water pollution prevention plan as well as the implementation, maintenance, monitoring, and inspection of the storm water pollution prevention plan facilities during the construction period.

H. The Contractor shall not begin any construction work until the Contractor has filed a complete Notice of Intent (NOI) with ODEQ. An NOI must be filed with ODEQ at least

seven days prior to commencing construction activities, or if utilizing electronic submittal, prior to commencing construction activities.

I. Upon closeout of the Project, the Contractor shall submit at Notice of Termination (NOT) to the ODEQ using the proper form and provide a copy to the Engineer for record purposes.

1.2 SUBMITTALS

A. Storm Water Pollution Prevention Plan (SWPPP)

B. Notice of Intent (NOI) for Storm Water Discharges Associated with Construction Activity under the OPDES General Permit

C. Construction Site Notice

D. Notice of Termination (NOT) for Storm Water Discharges Associated with Construction Activity under the OPDES General Permit

E. Notice of Change (if applicable)

1.3 REFERENCED STANDARDS

A. Oklahoma Department on Environmental Quality (ODEQ) OPDES General Permit No. OKR10 or latest application permit

1.4 MATERIALS

A. The exact items, quantities, types and locations of the control measures shall be presented in the Storm Water Pollution Prevention Plan.

1.5 CONSTRUCTION METHODS

A. Prior to the start of the construction, the Contractor shall submit to the Engineer, for approval, schedules for accomplishment of the pollution control measures in accordance with the Storm Water Pollution Prevention Plan. The Contractor shall also submit, for approval, proposed methods of pollution control in areas which may be outside the construction limits such as construction and haul roads, field offices, equipment and supply areas, and material sources, as well as plan for disposal of waste materials. Work on the project shall not begin until the schedules for implementation of the controls and methods of operations have been reviewed and approved by the Engineer in writing.

B. The Contractor shall provide control measures to prevent or minimize impact to receiving waters as required by the Plans and/or in a manner approved by the Engineer.

C. In any disturbed area where construction activities have ceased, permanently or temporarily, the Contractor shall stabilize the area by the use of seeding, mulching, soil retention blankets or other appropriate measures within 14 days, unless construction activities are scheduled to resume within 21 days.

D. The Contractor shall effectively prevent and control erosion and sedimentation on the site at the earliest practicable time as outlined in the approved schedule. Control measures,

where applicable, will be implemented prior to the commencement of each construction operation or immediately after the area has been disturbed.

E. The Contractor shall limit the amount of disturbed earth to the areas shown on the Plans in a manner approved by the Engineer. If the Contractor is not able to effectively control soil erosion and sedimentation resulting from construction operations, every effort shall be made to limit the amount of disturbed area at any given time.

F. Should the control measures fail to function effectively, the Contractor shall act immediately to bring the erosion and sedimentation under control by maintaining existing controls or by providing additional controls as directed by the Engineer. When in the opinion of the Engineer the site is adequately stabilized, the control measures shall be removed and properly disposed of by the Contractor.

G. The Contractor shall also conform to the following practices and controls. All labor, tools, equipment and incidentals to complete the work will not be paid for directly but shall be considered as subsidiary work to the various items included in the contract.

1. Disposal areas, stockpiles and haul roads shall be constructed in a manner that will minimize and control the amount of sediment that may enter receiving waters. Disposal areas shall not be located in any wetland, waterbody or streambed. Construction roads may not be located in or cross any waterbody or streambed without prior approval of the Engineer and shall be done in compliance with applicable rules and regulations.
2. Construction operations in rivers, streams, lakes, wetlands and other waterbodies shall be restricted to those areas where it is necessary to perform the work shown on the Plans. Wherever streams are crossed, temporary bridges, timber mats of other structures shall be used, as directed by the Engineer. The use of a work road within a stream channel shall be minimized to the greatest extent practicable.
3. Protected storage for paints, chemicals, solvents, fertilizers and other potentially toxic materials will be provided by the Contractor and on the location approved by the Engineer.
4. Construction staging areas and vehicle maintenance areas shall be constructed by the Contractor in a manner to minimize the runoff of pollutants and their location will be approved by the Engineer. The Contractor shall prevent pollution of receiving waters with petroleum products or other hazardous or regulated substances. When work areas of material sources are located adjacent to a waterbody, control measures such as dikes, gabions or rock berms shall be used to keep sediment and other contaminants from entering the adjacent waterbody. Care shall be taken during the construction and removal of such barriers to minimize down-gradient sedimentation.
5. All waterways shall be cleared as soon as practicable of temporary embankment, temporary bridges, matting, falsework, piling, debris or other obstructions placed during construction operations that are not a part of the finished work.
6. Disturbance of existing vegetation shall be minimized and limited to only those areas approved by the Engineer.
7. Construction entrances shall be stabilized by the use of rock, timber matting or other acceptable techniques to minimize the off-site vehicle tracking of sediment.

H. The project will not be accepted until, in the opinion of the Engineer, the Contractor has established a uniform perennial vegetative cover with a density of 70 percent in all areas not covered by permanent structures, or that equivalent permanent or temporary

stabilization measures (such as riprap, gabions, soil retention blankets, mulching or geotextiles) have been employed.

1.6 MEASUREMENT AND PAYMENT.

A. Temporary erosion, sedimentation and stormwater pollution prevention and control will not be measured for payment but shall be included in other items of work unless a specific pay item is included in the bid schedule.

B. Removal of all control measures not incorporated as permanent control measures shall be performed subsidiary to the various bid items.

C. In case of failure on the part of the Contractor to prevent and control soil erosion, sedimentation and water pollution which may degrade receiving water, the Engineer reserves the right to employ outside assistance or to use State forces to provide the necessary corrective measures. Such incurred direct costs plus project engineering costs will be deducted from any monies due or to become due to the Contractor.

D. Pollution control measures may be applicable to construction work outside the right of way where such work is necessary as a result of roadway related construction such as material source operations, haul roads and equipment storage sites. Pollution control measures outside the right-of-way will not be measured for payment but shall be performed at the Contractor's expense.

PART 2 PRODUCTS

2.1 EROSION CONTROL PRODUCTS

A. Provide for construction, maintenance and removal of erosion control in accordance with SWPPP by a combination of the following installed per ODOT Standards and/or industry standards:
1. Temporary Sediment Control Slope Drains
2. Temporary Sediment Control Bale Barriers
3. Temporary Silt Fence
4. Temporary Silt Dike
5. Temporary Sediment Controls Filters
6. Temporary Sediment Control Basins
7. Nylon Erosion Control Mat
8. Ditch Liner Protection
9. Sodding & Sprigging
10. Mulch
11. Sandbags
12. Geotextile Fabric
13. Other items per approved submittal

PART 3 EXECUTION (NOT USED)

3.1 INSTALLATION

A. Storm Water Pollution Prevention Plan
   1. Develop and implement the project's Storm Water Pollution Prevention Plan (SWPPP) in accordance with the State's General Permit requirements. Prevent water pollution from storm water runoff by using and maintaining appropriate structural and nonstructural BMPs to reduce pollutants discharges to the MS4 from the construction site.

B. Provide for construction, maintenance and removal of erosion control in accordance with SWPPP and installed per ODOT Standards and/or industry standards.

C. Control Measures
   1. Implement control measures in the area to be disturbed before beginning construction, or as directed. Limit the disturbance to the area shown on the Drawings or as directed.
   2. Control site waste such as discarded building materials, concrete truck washout water, chemicals, litter and sanitary waste at the construction site.
   3. If, in the opinion of the Engineer, the Contractor cannot control soil erosion and sedimentation resulting from construction operations, the Engineer will limit the disturbed area to that which the Contractor is able to control. Minimize disturbance to vegetation.
   4. Immediately correct ineffective control measures. Implement additional controls as directed. Remove excavated material within the time requirements specified in the applicable storm water permit.
   5. Upon acceptance of vegetative cover by the City, remove and dispose of all temporary control measures, temporary embankments, bridges, matting, falsework, piling, debris, or other obstructions placed during construction that are not a part of the finished work, or as directed.

D. Do not locate disposal areas, stockpiles, or haul roads in any wetland, water body, or streambed.

E. Do not install temporary construction crossings in or across any water body without the prior approval of the appropriate resource agency and the Engineer.

F. Provide protected storage area for paints, chemicals, solvents, and fertilizers at an approved location. Keep paints, chemicals, solvents, and fertilizers off bare ground and provide shelter for stored chemicals.

G. Installation and Maintenance
   1. Perform work in accordance with the current governing ODEQ General Permit
   2. When approved, sediments may be disposed of within embankments, or in areas where the material will not contribute to further siltation.
   3. Dispose of removed material in accordance with federal, state, and local regulations.
   4. Remove devices upon approval or when directed.
   5. Upon removal, finish-grade and dress the area.

6. Stabilize disturbed areas in accordance with the permit, and as shown on the Drawings or directed.
7. The Contractor retains ownership of stockpiled material and must remove it from the project when new installations or replacements are no longer required.

END OF SECTION

SECTION 31_41_33

TRENCH SHIELDING

PART 1 GENERAL

1.1 SUMMARY

A. Trench and excavation safety system meeting appropriate requirements established in the Occupational Safety and Health Administration (OSHA) Safety and Health Regulations, Part 1926, Subpart P - Excavations, Trenching and Shoring, and other applicable regulations.

1.2 RELATED SECTIONS

A. Section 01_00_01 Basic Requirements

B. Section 01_33_01 General Submittal Requirements

1.3 SUBMITTALS

A. Submittals for products and miscellaneous items in this specification section shall be submitted in accordance with Section 01_33_01 General Submittal Requirements and related submittal sections if included.

B. The Contractor shall retain the services of a Professional Engineer, licensed in the State of Oklahoma and having experience in soils engineering, to design and prepare the trench and excavation plans for all trench and excavations. The plans shall include shoring systems, systems to protect existing utilities, slope stability monitoring and dewatering.

C. Submit a plan for all excavations of a depth 5 feet or greater, with a bottom width less than twice the total depth of the excavation, where an existing structure or utility falls within a 2 horizontal to 1 vertical (2:1) slope from the bottom of the excavation.

1.4 QUALITY ASSURANCE

A. Engineers responsible for design of trench safety systems shall be Professional Engineers licensed in the state of Oklahoma.

B. Engineers must demonstrate experience in soil mechanics, structural engineering and design of trench safety systems with a minimum 5 years of experience on similar sized projects.

C. Engineers shall also submit to the Owner certification of professional liability insurance coverage of at least 1,000,000.00. Such coverage must not exclude structural design or trench safety design.

1.5 DESIGN REQUIREMENTS

A. After award, the Contractor shall have a trench and excavation plan prepared. This excavation plan must illustrate proposed trench safety and excavation requirements specifically designed for this project

B. The Contractor is responsible for obtaining additional soil borings and soil analysis as required for design. The trench and excavation plan is to be designed in conformance with OSHA standards and other applicable regulations.

C. No work in trenches or excavations in excess of five feet deep is to be performed until this plan is prepared and implemented.

D. The Contractor shall not deviate from the trench and excavation plan without written authorization from the engineer who prepared the trench and excavation plan. This written authorization shall be signed, dated and sealed by the engineer.

E. Any changes in the trench and excavation plan after initiation of construction will not be cause for extension of time or change order.

F. Contractor accepts sole responsibility for compliance with all applicable safety requirements.

G. The trench and excavation plan does not relieve Contractor from responsibility for any or all construction means, methods, techniques and procedures. Furthermore the Contractor shall indemnify the Owner and Consulting Engineer from any and all claims due to any property damage or bodily injury (including death) that arises from use or misuse of the trench safety and excavation plan, or from Contractor's negligence in performance of the contract work.

1.6 PROTECTION OF FACILITIES

A. Before the start of earthwork operations, adequately protect utilities, structures, trees, shrubs and other permanent objects. Costs resulting from damage to permanent facilities due to negligence or lack of adequate protection will be charged to the Contractor. Excavations near existing structures or utilities must be instrumented to verify no impact to existing facilities.

B. Provide surface drainage during the period of construction to protect the work and to avoid nuisance to adjoining property.

PART 2 PRODUCTS (NOT USED)

PART 3 EXECUTION

3.1 GENERAL

A. Trench safety system shall be constructed, installed and maintained in accordance with the details shown in the design prepared by the Contractor's licensed Professional Engineer

to prevent death or injury to personnel or damage to structures or utilities in or near these trench excavations.

B. Unless otherwise specified elsewhere, materials excavated from trench to be stored no closer to the edge of trench than one-half the depth of the trench.

3.2 MAINTENANCE

A. The safety system shall be maintained in the condition as specified by the Contractor's Trench Safety Engineer.

B. The Contractor shall take all necessary precautions to ensure the safety systems are not damaged during their use. If at any time during its use a safety system is damaged, personnel shall be immediately removed from the trench or excavation area and the safety system repaired.

C. The Contractor shall take all necessary precautions to ensure no loads, except those included in the safety system design, are imposed upon the excavation.

3.3 INSPECTION

A. Contractor shall make daily inspection of trench safety and excavation system to ensure that the system meets OSHA requirements and the requirements of the trench safety plan.

B. Daily inspection is to be made by qualified personnel. If evidence of possible cave-ins, slides or other conditions of concern is apparent, all work in the trench shall cease until necessary precautions have been taken to safeguard personnel entering trench and protect adjacent structures and utilities.

C. Contractor shall maintain permanent record of daily inspections.

D. The Contractor's Trench Safety Engineer shall make periodic site visits (at the start of each new excavation and at least once per week for all open excavations). Within two (2) days after each visit, the Contractor's Trench Safety Engineer shall make a written report to the Owner certifying that the trench and excavation plan and safety construction practices are being followed. The Contractor's Trench Safety Engineer shall immediately report any unsafe construction practices to the Owner and Contractor.

3.4 REMOVAL

A. Backfilling and removal of trench supports shall progress together from bottom of trench upward.

B. Remove no braces or trench supports until all personnel have evacuated the trench.

C. Backfill trench to within five feet of natural ground prior to removal of entire trench safety system.

END OF SECTION

THIS PAGE INTENTIONALLY LEFT BLANK FOR DOUBLE SIDED PRINTING

SECTION 32_31_13

CHAINLINK FENCING & GATES

PART 1 GENERAL

1.1 SCOPE OF WORK

A. The Contractor shall furnish all labor, equipment, and materials to install a chain link fence and gates at the location shown on the drawings.

B. The height of the fence shall be as indicated on the drawings.

C. When existing fence is within the project site and is disturbed by construction activities, fencing will be replaced with fencing as specified herein.

D. If a conflict occurs between this specification and the Drawings or other Specification sections, the most stringent/costly shall be included in the Contractor's bid.

1.2 SUBMITTALS

A. Furnish sets of catalog cuts or detailed drawings for all parts and equipment to be used to construct the fence and gates in accordance with Section 01_33_01 General Submittal Requirements. Shop drawings showing material sizes and weights, fencing heights, mounting details, gates and operators.

1.3 QUALITY ASSURANCE

A. The fence shall be the product of one manufacturer, except for items which do not influence the appearance of the completed fence.

B. The Contractor shall include all supplementary parts necessary or required for a complete and satisfactory installation, as per the intent of the drawings.

C. No used materials shall be used in the construction.

PART 2 PRODUCTS (NOT USED)

2.1 MANUFACTURER

A. Minimum of 5 years of experience manufacturing galvanized coated chain link fencing.

B. Approved Manufacturer or equal:
1. Allied Fence, Inc.
2. American Fence Corp.
3. Anchor Fence, Inc.
4. Master Halco, Inc.

2.2 LINE POST

A. Line post shall be made of 2 3/8" O.D. Schedule 40 Galvanized Pipe; 3.65 lbs/ft.

B. The same kind of material shall be used throughout the project.

C. Posts shall be spaced 10 feet apart and set in concrete 36" deep, 10" diameter or as shown on the Drawings (if Drawings exceed depth / diameter in the Specification.)

2.3 GATE, CORNER, END, & STRETCHER POST:

A. Post shall be made of 3" O.D. Schedule 40 Galvanized Pipe; 5.79 lbs/ft.

B. Posts shall be set in concrete 42" deep, 1'4" diameter or as shown on the Drawings (if Drawings exceed depth / diameter in the Specification.)

2.4 RAILS

A. Top, Bottom, and Middle Rails shall be 1 5/8" diameter Schedule 40 Galvanized Pipe; 2.28 lbs/ft.

2.5 CHAIN LINK FABRIC

A. Fence fabric shall be 9 gauge, 2" mesh, galvanized class III (1.2 oz. zinc per square foot).

B. Both top and bottom selvages twisted and barged

C. There shall be no splice in any roll

D. Excessive roughness, blisters, sal ammoniac spots, bruises, or flaking shall be considered a basis for rejection.

2.6 FITTINGS

A. Tension bands shall be 14 gauge by ¾" spaced 15" apart.

B. Brace bands shall be 12 gauge by ¾".

C. Rail end, and caps shall be pressed steel. Tension bars shall be 3/16" by ¾".

D. Carriage bolts shall be 5/16" by 1-1/2".

2.7 BARB WIRE

A. Barb Wire shall be 4 Pts, 12-1/2 gauge galvanized wire, class I.

2.8 TIE WIRE

A. Tie wire shall be aluminum 9 gauge, 8 1/4" at 14" O.C. on Line Posts; 6 1/2" at 18" O.C. on rails.

2.9 CONCRETE

A. Concrete shall have a minimum compressive strength of 4000 psi at 28 days.

2.10 MOW STRIP

A. Provide mow strip under fence as outlined in the Drawings.

PART 3 EXECUTION

3.1 GENERAL

A. The fence shall be constructed to the line and grade indicated on the Plans. All fencing shall be stretched taut and installed to the required spacing. The finished fence shall be plumb and true to line and ground contour.

3.2 CLEARING FENCE LINE

A. The site of the fence shall be sufficiently cleared of obstructions, and surface irregularities shall be graded so that the fence will conform to the general contour of the ground.

B. The fence line shall be cleared to a minimum width of 2 feet on each side of the fence alignment. All materials cleared or excavated shall be disposed as directed by the Engineer.

C. All holes remaining after grubbing or excavating shall be filled with suitable soil.

3.3 SETTING POSTS

A. All posts shall be spaced as shown on the Plans and set in concrete bases. End, comer, stretcher, and gate posts shall be set 42 inches into a concrete base having a diameter 16 inches.

B. Line post shall be set 36 inches into a concrete base having a diameter of 12 inches.

C. Concrete bases shall be allowed to cure 72 hours before proceeding with installation of wire or gates.

D. The top of the bases shall be 2-3 inches above the final ground surface and slope away from the posts.

E. If bedrock is encountered before reaching the required depth, the excavation shall be continued to the depth required or 18 inches into bedrock, whichever is Jess and shall be a minimum of 2 inches larger than the outside diameter or largest dimension of the post and filled with grout.

F. No extra payment or extension of time shall be granted for rock excavation.

G. Post length shall be adjusted to compensate for reduced setting.

H. Posts shall be set plumb and in alignment. Straight runs between braced posts shall not exceed 330 feet. Additional posts shall be set at each abrupt change in grade. Extra length posts will be required at small depressions where it is not practicable for the fence to follow closely to the contour of the ground. At such ground depressions, the Contractor shall close the space below the bottom of the fence with barbed wire fanned at 6 inch maximum spacing.

I. The wires shall be stretched taut and securely fastened to the post to prevent vertical movement.

J. Completely protect fence posts from concrete splatter during post installation. Posts containing concrete splatter unable to be removed will be subject to replacement.

3.4 MOW STRIP

A. Provide mow strip as outlined in the Drawings. Mow strip to be placed after fence post installation, but before fabric in installed.

B. Completely protect fence posts from concrete splatter during mow strip installation. Posts containing concrete splatter unable to be removed will be subject to replacement.

3.5 INSTALLING CHAIN LINK FENCE

A. Fence shall be stretched uniformly tight by means of an approved mechanical tensioning device.

3.6 CLEANUP

A. The Contractor shall remove from the vicinity of the completed work all tools, buildings, equipment, etc., used during construction.

B. Surplus materials from digging post holes shall be spread over the ground adjacent to the new post to a maximum depth of 1".

C. Remove all foreign substances from fabric posts and exposed hardware prior to completion. This includes, but is not limited to, paint, adhesives, concrete slobber, grease and oil

3.7 GATES

A. Gates shall be constructed as detailed on the Plans. Gates shall be erected to swing 90 degrees from closed to open, and shall be provided with stops as specified or detailed on the Plans.

B. Hinges and diagonal bracing shall be adjusted so that the gates will hang level.

END OF SECTION

SECTION 32_92_00

TURFS & GRASSES

PART 1 GENERAL

1.1 SCOPE OF WORK

A. Preparing ground, fertilizing, mulching, seeding and/or sodding per the description on the drawings and as specified herein.

B. All areas disturbed by construction activities (including Contractor's staging areas) shall be seeded/hydromulched or sodded as specified herein regardless of whether called out on Drawings as follows:
   1. All disturbed areas inside treatment plant fence shall receive slab sod.
   2. Residential yards and/or areas of improved and maintained existing turf shall receive solid slab sod.
   3. All other disturbed areas shall receive seed and hydromulch.

C. Limits of disturbed areas to be grassed include actual ground disturbance plus four (4') feet outside of disturbed area / trench / fenced area.

D. If no pay item(s) are included in the Bid Form, furnishing and installing of turfs and grasses as specified herein shall be included in associated items of work.

E. Grassing shall not be performed until underground utilities, storm drainage structures, surfacing and structures in or adjacent to areas to be planted have been installed, tested, inspected and approved.

F. It is the contractor's responsibility to accurately quantify the amount of each type of grassing to be included in the bid amount.

G. Any conflict in requirements for areas to be grassed the more stringent shall apply and be bid by the Contractor.

1.2 SUBMITTALS

A. Submit in accordance with Section 01_33_01 General Submittal Requirements

B. Certificates:
   1. Submit certification from supplier that each type of product conforms to this Section. Certificate shall accompany product delivery.
   2. Each delivery shall bear a certification tag and label.
   3. Herbicide shall be labeled with manufacturer's name, address and chemical analysis.

1.3 QUALITY ASSURANCE

A. Contractor shall make arrangements to obtain water as needed to supply the seeded and sodded areas with adequate moisture (3" to 4" penetration) for seed germination and plant growth until accepted. All costs for watering shall be borne by the Contractor.

B. Beginning immediately after each area is planted and continuing until final acceptance (6 weeks minimum maintenance regardless of acceptance date) maintain plantings to keep plants in a vigorous and healthy condition.
   a. Watering as necessary to keep top 3 inches of soil moist.
   b. Maintain a grass height less than 4 inches unless otherwise directed by the Owner.
   c. Remove weeds and foreign grass over plant areas at least once per week. Herbicides may be used for this purpose when approved by Owner.
   d. Clean and replace as necessary

1.4 DELIVERY, HANDLING AND STORAGE

A. Fertilizer shall be delivered to site in sealed containers bearing manufacturers' guaranteed statement of analysis.

B. Store fertilizer in weatherproof locations.

C. Furnish and deliver each variety of seed in separate bags or containers; or for native seed mixtures, each mixture should have original label from the supplier listing all species included and the percentage of mixture represented by each species.

D. Keep seed dry during storage.

E. Sod
   1. Delivered to the site well-watered and ready for placement without damage to the root system.
   2. Harvest & deliver sod only after laying bed is prepared for sodding.
   3. Roll or stack to prevent yellowing.
   4. Deliver and lay within 24 hours of harvesting.
   5. Keep moist and covered to protect from drying from time of harvesting to time of laying.

PART 2 PRODUCTS

2.1 MATERIALS

A. Seed
   1. Common Bermuda ("Cynodon Dactylon")
      a. The seed shall be harvested within one year prior to planting
      b. Free of Johnson grass, field bind weed, dodder seed, and free of other weed seed to the limits allowable under the Federal Seed Act and applicable seed laws
      c. The seed shall not be a mixture

d. The seed shall be hulled, extra fancy grade, treated with fungicide and have a germination and purity that shall produce a pure live seed content of not less than 95 percent.
e. Germination rate shall be 85 percent or better
f. Seed shall be labeled in accordance with U.S. Department of Agriculture rules and regulations.
g. Weed content shall be less than 2 percent
h. Seed furnished shall have date of analysis shall within 9 months of the time of delivery to the Project.

2. Italian Ryegrass Seed ("Lolium multiflorum")
   a. Seed shall be harvested within 1-year prior to planting and shall be free of perennial ryegrass seed, other grass seed and weed seed.
   b. Rye grass seed shall have purity of 95 percent or better, treated with fungicide
   c. 90 percent minimum germination rate.

B. Sod
1. Sod shall be alive, healthy and free of insects, disease, stones, undesirable foreign materials and weeds and grasses deleterious to its growth or which might affect its subsistence or hardiness when transplanted.
2. The sod shall be free of yellowed areas.
3. The sod shall be obtained from state certified commercial groves, and harvested no earlier than 24 hours prior to planting.
4. Minimum sod thickness and maximum grass height shall be ¾-inch and 2-inches respectively.
5. Sod shall be machine cut to uniform soil thickness and shall be of equal width and of a size that permits the sod to be lifted, handled and rolled without breaking.
6. Broken or torn sod with uneven ends will be rejected.

C. Fertilizer
1. Fertilizer shall be of an organic or chemical base.
2. Fertilizer shall be a commercial product, uniform in composition, free flowing, with uniform particle size, and minimal dust.
3. Fertilizer which has been exposed to high humidity and moisture or has become caked will not be accepted.

D. Mulch
1. Cellulose Fiber Mulch
   a. Mulch shall be natural cellulose fiber mulch produced from grinding clean, whole wood chips, refined specifically for hydromulch applications.
   b. Mulch fibers shall be free of abrasive or hard containments which would inhibit hydraulic pumping. The mulch fibers shall maintain uniform suspension in water under agitation and shall blend with grass seed, fertilizer, and other additives to form homogenous slurry. Upon application the mulch material shall form a strong, moisture-retaining mat without the need of an asphalt binder. This mat shall have the characteristics of moisture absorption and percolation and shall cover and hold grass seed in contact with the soil.
   c. The wood fiber mulch shall be dyed green to aid visual metering during application. The dye shall be biodegradable and not inhibit plant growth.
2. Straw or Hay Mulch

a. Straw mulch shall be oat, wheat, or rice straw. Hay mulch shall be prairie grass, Bermuda grass, or other hay as approved by the Engineer. The mulch shall be free of Johnson grass or other noxious weeds and foreign materials. The straw mulch will be kept dry and shall not be rotted or molded. A minimum of 50% by weight of the herbage making up the hay shall be 10" in length or longer.
b. Use a tacking agent applied in accordance with the manufacturer's recommendations or a crimping method on all straw or hay mulch operations.
c. Straw or hay mulch shall not be used for hydromulching

E. Tacking Agent (Tackifier)
1. Natural vegetable gum containing gelling and hardening agents that when mixed with water and properly cured, shall form an insoluble network.

F. Herbicide
1. Contractor shall be responsible for using herbicides in a manner consistent with label requirements and precautions.
2. Contractor shall adhere to all Federal, State, and local laws governing herbicide usage.
3. Only registered herbicides having a minimal residual effect shall be used.
4. Adjacent to streams or other aquatic environments only herbicides approved for aquatic environments shall be used.
5. Written authorization of the Engineer is required prior to use of any herbicide.
6. Herbicide used shall be an easy to apply, effective in a short term, chemical agent to inhibit or destroy weed growth, while being harmless to seed and grass being implanted.

PART 3 EXECUTION

3.1 PREPARATION OF SEEDBED

A. Place topsoil (if in area where it has been previously stripped)

B. Scarify existing subgrade to minimum depth of four (4) inches and roll lightly with appropriate roller to consolidate topsoil. Protect topsoil from wind and water erosion until planting is completed.

C. Rake areas to be sodded smooth, free from unsightly variations, bumps, ridges or depressions. Do not vary final grades more than 0.1 feet from finish elevations. No areas shall pond water.

D. Apply fertilizer at specified rate. Apply after raking soil surface and not more than 48 hours prior to grassing. Lightly water to aid in dissipation of fertilizer.

E. Receive acceptance of fine grading from Owner or Engineer prior to grass planting.

3.2 SODDING

A. Sodding shall be performed only during the seasons when satisfactory results can be expected. Frozen sod shall not be used and sod shall not be placed upon frozen soil. Sod may be transplanted during periods of drought with the approval of the Engineer, provided the sod bed is watered to moisten the soil to a depth of at least 4 inches immediately prior to laying sod.

B. Plant sod specified after the area has been completed to the lines and grade as shown on the Drawings with topsoil.

C. Use care to retain native soil on the roots of the sod during the process of excavating, hauling and planting.

D. Keep sod material moist from the time it is dug until planted.

E. Pitchforks shall not be used to handle sod, and dumping from vehicles shall not be permitted. The sod shall be carefully placed by hand, edge to edge and with staggered joints, in rows at right angles to the slopes, commencing at the base of the area to be sodded and working upward. The sod shall immediately be pressed firmly into contact with the sod bed by tamping or rolling with approved equipment to provide a true and even surface, and insure knitting without displacement of the sod or deformation of the surfaces of sodded areas.

F. Where the sod may be displaced during sodding operations, the workmen when replacing it shall work from ladders or treated planks to prevent further displacement. Screened soil of good quality shall be used to fill all cracks between sods. The quantity of the fill soil shall not cause smothering of the grass.

G. Where the grades are such that the flow of water will be from paved surfaces across sodded areas, the surface of the soil in the sod after compaction shall be set approximately one inch below the pavement edge. Where the flow will be over the sodded areas and onto the paved surfaces around manholes and inlets, the surface of the soil in the sod after compaction shall be placed flush with pavement edges.

H. Lay sod with closely fitted joints having no voids and with ends of sod strips staggered. Lay sod within 48 hours of harvesting. Place sod so that the entire area designated for sodding is covered.

I. Fill voids left in the solid sodding with additional sod and tamp.

J. On slopes 2:1 and steeper, lay sod perpendicular to slope and secure every row with wooden pegs at maximum 2 feet on center. Drive pegs flush with soil portion of sod.

K. Prior to placing sod, on slopes greater than 3:1 or where indicated, place Hold/Gro or Roll Lite or equal over topsoil. Securely anchor in place with posts sunk firmly into ground at maximum 16 feet on center along pitch of slope and equal to width of wire mesh horizontally across slopes.

L. Roll and tamp sod so that sod is in complete contact with topsoil at a uniform slope.

M. Watering
1. After sod is laid, irrigate thoroughly to secure six (6) inch minimum penetration into soil below sod.
2. Water lawn areas once a day with ½-inch water for first three (3) weeks after area is sodded.
3. After three (3) weeks period, water twice a week with ¾-inch of water each time unless comparable amount has been provided by rain.
4. Make weekly inspections to determine moisture content of soil.
5. Continue watering until fully grown in.

3.3 SEEDING

A. Seeding will be required on all disturbed or excavated areas no receiving sod

B. The Contractor shall employ a satisfactory method of sowing by use of either approved mechanical hand seeders or mechanical power-driven drills. When delays in operation carry the work beyond the specified planting seasons, or when conditions are such that by reason of drought, high winds, excessive moisture, or other factors, satisfactory results are not likely to be obtained, seeding shall stop. It will be resumed only where the desired results are probable or when approved alternate procedures have been adopted.

C. Broadcast Seeding
1. Broadcast seed in two directions at right angles to each other.
2. Harrow or rake lightly to cover seed.
3. All varieties of seed as well as fertilizer shall be distributed simultaneously provided that each component is uniformly applied with mechanical equipment.
4. Seed and fertilizer mixture distributed as a water slurry, shall be applied within 30 minutes after components are placed in the equipment.
5. After planting, the planted area shall be rolled with a light roller. All rolling of the sloped areas shall be along the contour of the slopes.

D. Drill Seeding
1. All varieties of seed and fertilizer shall be distributed at the same time provided that each component is uniformly applied at the specified rate.
2. Drill seed at a depth of ¼-inch to ⅜-inch utilizing a pasture or rangeland type drill.
3. All drilling shall be along the contour of the slope.
4. The distance between drill rows shall not exceed 12 inches.
5. After planting, the area shall be rolled with a roller integral to the seed drill, or a light drum roller. All rolling of the sloped areas shall be on the contour of the slopes.

E. Mulch
1. Spread mulch material on areas to be planted where construction was completed too late for planting a temporary fall crop or insufficient residues are produced by the fall planting. Mulch the planting areas to control soil erosion and seed loss by wind and water and to promote grass establishment. Apply mulch hay at the rate of 2 tons per acre and spread uniformly so that about 25% of the ground surface is uniformly visible through the mulch. Anchor the mulch hay by treading into the soil with a straight disk type mulch tiller. Perform disking across the slope along contours.

F. Hydromulching
1. At time of seeding, soil to be moist but not muddy and wind velocity shall not exceed 10 miles per hour. Add water if required to moisten soil.
2. Hydraulic mulching shall consist of the mixing of wood fiber mulch, grass seed, fertilizer and other additives with water. It shall be mixed in standard hydraulic mulching equipment to form homogeneous slurry. This slurry shall be sprayed, under pressure, uniformly over the soil surface. The hydraulic mulching equipment shall contain a continuous agitation system that keeps all materials in uniform suspension throughout the mixing and distribution cycles.
3. Using standard hydraulic mulching equipment, the wood fiber mulch, seed and fertilizer slurry shall be applied evenly over the soil surface in a one-step operation. The mixture shall be applied to the area to be seeded within 30 minutes after all components are placed in the equipment.
4. Complete final grading and hydromulch Rye grass seed evenly at rate of 5 pounds per 1,000 square feet with wood cellulose fiber at rate of 50 pounds per 1,000 square feet and fertilizer at the rate of 18 pounds per 1,000 square feet.
5. Complete final grading and hydromulch Bermuda grass seed evenly at rate of 3 pounds per 1,000 square feet with wood cellulose fiber at rate of 50 pounds per 1,000 square feet and fertilizer at the rate of 18 pounds per 1,000 square feet.
6. Add tackifier to mix for slopes steeper than 4:1 at rate of 1 pound per bag of mulch.

3.4 FERTILIZING

A. Pre-Planting Application
1. Uniform application of 10-20-10 (N-P-K) fertilizer at a rate of 25 lbs. per 1,000-sq. ft. will be required for all areas to be seeded.

B. Post Planting Applications
1. For autumn applications a complete fertilizer with 4-1-2 to 3-1-2 (N-P-K) ratio shall be applied. Fertilizer shall contain 30 to 50 percent slow-release nitrogen unless noted otherwise.
2. Seeds: As soon as new growth starts after seeding, grass shall be fertilized every 10 to 14 days with 0.75 to 1.0 lb. nitrogen per 1,000-sq. ft. Applications shall alternate between nitrogen only fertilizer whose analysis is, by weight 21-0-0 or 45-0-0 and a complete fertilizer with a 3-1-2 or 4-1-2 (N-P-K) ratio.

C. Sod:
1. Fertilizer shall be applied every 4 weeks until acceptance at 1.0 lb. nitrogen per 1,000-sq.ft.
2. Apply fertilizer at application rate recommended by soil analysis.
3. Apply fertilizer after smooth raking of topsoil and prior to installation of sod.
4. Apply fertilizer no more than 48 hours before laying sod.
5. Mix fertilizer thoroughly into upper 4 inches of topsoil.

D. Water: Immediately water in fertilizer after each application.

3.5 PLANTING SEASON AND APPLICATION RATE

A. All planting shall be done between the dates specified for each grass type except when specifically authorized in writing by the Owner.

B. Application Rates & Dates

Type	Application Rate (Pounds per acre)	Planting Date
Hulled Bermuda	120	April 1 - Oct. 1
Mixed Bermuda & Rye (Bermuda Hulled)	120	Oct. 1 - April 1
Rye	200	Oct. 1 - April 1

C. The location, planting season, seed type and seeding rate is as follows:
   1. Fall planting
      a. Temporary only
      b. To be followed by spring planting of perennial vegetation as outlined in 1.1
   2. Spring planting
      a. Permanent
      b. Soil temperatures for spring planting should be above 65 degrees Fahrenheit
      c. Cover grass seed by ⅛ to ¼ inches of soil
      d. Seed bed should be rolled with a flat roller weighing from 20 to 40 pounds per square inch following seeding

D. If the schedule is such that Annual Rye Grass is planted, the rye grass shall be removed and an undamaged complete stand of specified grass shall be achieved prior to acceptance.

E. Seeding outside the specified seeding periods may be permitted at the Engineer's option, provided the Contractor is willing to make appropriate modifications to his seeding operations, and will guarantee the crop.

3.6 PROTECTION AND MAINTENANCE OF LAWN AREAS

A. For residential areas, facility sites, or areas designated to be lawn. Establish a dense lawn of permanent Bermuda grass, free from lumps and depressions. It shall be the responsibility of the Contractor to maintain planted areas until an approved stand is established but not less than 45 calendar days. Maintenance shall consist of watering, replanting, mowing, weeding, maintaining existing grades and repair of erosion damage.

B. Mow and edge lawn each time after the lawn has reached a height of 2-1/2 inches to 3 inches. Mow to a height of 2 inches returning the clippings to lawn.

C. Reseed any bare areas within the utility corridor that are greater than 36” across or areas greater than 36” across that contain only weed species. Prior to reseeding, remove all weed species with approved contact herbicide or by mechanical means.

D. Maintain the grassed areas until final acceptance of the project. Maintenance includes, but is not limited to, fertilizer, weed control, reseeding, watering, and mowing. Fertilize and perform weed control when necessary or at least three (3) times annually. Water and mow areas when necessary. Maintain a grass height less than 8 inches within the utility corridor until accepted or otherwise directed by the Engineer.

E. Provide surface repair to ruts, ridges, tracks. Replant areas required for final acceptance.

3.7 WEEDING

A. Keep all seeded areas free from weeds and undesirable grasses until grass is established.

3.8 DISEASE AND INSECT PEST CONTROL

A. Upon discovery of any disease or insect pest infestation, identify or have identified the nature or species of infestation and submit the proposed method of control for approval prior to application of control measures.

3.9 ACCEPTANCE

A. Engineer will determine that a grassed area is established upon fulfillment of the following conditions:
   1. The permanent grass stand uniformly covers the planting area, with no exposed soil areas more than 36” across in any dimension.
   2. The permanent grass stand is free of over-topping weed species which would compete for sunlight, moisture, and nutrients. In addition, no area of pure weed species greater than 36” across in any dimension shall occur within the permanent grass stand.
   3. The majority of the grass plants in a stand shall have a well-established root system (i.e., dense fibrous roots extending to greater than 3 inches in depth below the soil surface) to survive if irrigation is discontinued.

B. At the completion of the maintenance period, the Engineer shall make a final inspection of plants, seeded, and sodded areas. Any areas not found to be in a healthy, growing condition shall be replaced at no charge to the Owner. Grass shall be healthy and growing with close stands.

C. Establish the permanent grass stand before September 1 to preclude having to perform a temporary Fall seeding. In the event a Fall seeding must be performed, follow-up the temporary seeding with a permanent seeding as specified.

3.10 CLEAN UP

A. Remove trash and debris resulting from lawn preparation from site daily as work progresses. Leave paved areas in a broom clean condition by sweeping or hosing.

END OF SECTION

THIS PAGE INTENTIONALLY LEFT BLANK FOR DOUBLE SIDED PRINTING

SECTION 31_01_30.90

BYPASS PUMPING OF SEWER SYSTEMS

PART 1 GENERAL

1.1 SUMMARY

A. Bypass pumping of the existing sewer system as needed.

1.2 RELATED SECTIONS

A. Section 01_00_01 Basic Requirements

B. Section 01_33_01 General Submittal Requirements

C. The Contract Documents are a complete unit and complementary to each other. The individual Specification sections and other Contract Documents do not contain all cross references to "related work" or "related sections." It is the Contractor's responsibility to review the complete Contract Documents in order to properly scope, schedule and coordinate the work of any/all subcontractors, suppliers, and others on this project. Anything called out in one location of the Contract Documents is binding as if it were called out in all sections of the Contract Documents.

1.3 SUBMITTALS

A. Submittals for products and miscellaneous items in this specification section shall be submitted in accordance with Section 01_33_01 General Submittal Requirements and related submittal sections and provisions of the Contract Documents.

B. Submit a detailed plan and description outlining all provisions and precautions that will be taken with regard to the handling of sewer flows. Submit the plan to the Engineer for approval a minimum of 7 days prior to commencing work. Include the following details:

1. Schedule for installation and maintenance of the bypass pumping system
2. Staging areas for pumps
3. Pump sizes, capacity, number of each size, and power requirements
4. Calculations for static lift, friction losses, and velocity
5. Pump curves showing operating range and system head curves
6. Sewer plugging methods
7. Size, length, material, joint type, and method for installation of suction and discharge piping
8. Method of noise control for each pump and/or generator, if required
9. Standby power generator size and location
10. Suction and discharge piping plan
11. Emergency action plan identifying the measures taken in the event of a pump failure or sewer spill
12. Staffing plan for responding to alarm conditions identifying multiple contacts by name and phone numbers (office, mobile)
13. A contingency plan to implement in the event the replacement or rehabilitation has unexpected delays or problems

1.4 ADMINISTRATIVE REQUIREMENTS

A. Coordination
1. Schedule meeting with Owner to review sewer shutdown prior to replacing or rehabilitating any facilities.
2. Owner reserves the right to delay schedule due to weather conditions, or other unexpected emergency within the sewer system.
3. Review bypass pumping arrangement or layout in the field with Owner prior to beginning operations. Facilitate preliminary bypass pumping run with City staff present to affirm the operation is satisfactory to the Owner.
4. After replacement or rehabilitation of facilities, coordinate the reestablishment of sewer flow with Owner's staff.
5. Provide onsite continuous monitoring during all bypass pumping operations using one of the following methods:
   a. Personnel on site
   b. Portable SCADA equipment

PART 2 PRODUCTS

2.1 EQUIPMENT

A. Pumping
1. Provide equipment that will convey 100 percent of wet weather peak flow conditions.
2. Provide fully automatic self-priming pumps. Foot-valves or vacuum pumps are not permitted for priming the system.
3. Pumps must be constructed to allow dry running for periods of time to account for the cyclical nature of sewer flow.
4. Provide 1 stand-by pump for each size to be maintained on site. Place backup pumps on line, isolated from the primary system by valve.
5. If multiple pumps are required to meet the flow requirements, provide the necessaryfittings and connections to incorporate multiple discharges.
6. Noise levels of the pumping system must follow the requirements of the Owner's noise ordinance (if applicable.)

B. Piping
1. Install pipes with joints which prevent the incident of flow spillage.

C. Plugs or Stop Logs
1. Plugs
   a. Select a plug that is made for the size and potential pressure head that will beexperienced.
   b. Provide an additional anchor, support or bracing to secure plug when back pressure is present.
   c. Use accurately calibrated air pressure gauges for monitoring the inflation pressure.
   d. Place inflation gauge at location outside of confined space area. Keep the inflation gauge and valve a safe distance from the plugs.
   e. Never over inflate the plug beyond its pressure rating.
   f. Stop Logs

1) Use stop log devices designed for the manhole or sewer vault structure in use.
2) If applicable, obtain stop logs from Owner that may be used on specific structures.

PART 3 EXECUTION

3.1 PREPARATION

A. Locate the bypass pipelines in area to minimize disturbance to existing utilities andobtain approval of those locations from the Owner.

B. Make preparations to comply with OSHA requirements when working in the presenceof sewer gases, oxygen-deficient atmospheres and confined spaces.

C. Do not begin bypass preparation and operation until Owner approval of the submittals requested per this Specification.

3.2 INSTALLATION

A. Install and operate pumping and piping equipment in accordance to the submittalsprovided per this Specification.

B. Sewer flow stoppage
1. Plugging
a. Use confined space procedures and equipment during installation when necessary.
b. Thoroughly clean the pipe before insertion of the plug.
c. Insert the plug seal surface completely so it is fully supported by the pipe.
d. Position the plug where there are not sharp edges or protrusions that may damage the plug.
e. Use pressure gauges for measuring inflation pressures.
f. Minimize upstream pressure head before deflating and removing.

C. Sewer flow control and monitoring
1. Take sufficient precautions to ensure sewer flow operations do not cause flooding or damage to public or private property. The Contractor is responsible for any damage resulting from bypass pumping operations.
2. Begin continual monitoring of the sewer system as soon as the sewer is plugged or blocked. Be prepared to immediately start bypass pumping if needed due to surcharge conditions.
3. Sewer discharge may be into another sewer manhole or appropriate vehicle or container only. Do not discharge sewer into an open environment such as an open channel or earthen holding facility.
4. Do not construct bypass facilities where vehicular traffic may travel over thepiping.
a. Provide details in the suction and discharge piping plan that accommodate both the bypass facilities and traffic without disrupting either service.

3.3 QUALITY CONTROL

A. Field Tests
   1. Perform leakage and pressure tests of the bypass pumping pipe and equipment before actual operation begins. Have City staff on site during tests.

3.4 CLOSEOUT ACTIVITIES

A. Once plugging or blocking is no longer necessary, remove in such a way that permits the sewer flow to slowly return to normal – preventing surge, surcharging, and major downstream disturbance.

END OF SECTION

SECTION 33_01_33

WASTEWATER LIQUID & SOLIDS REMOVAL & DISPOSAL

PART 1 GENERAL

1.1 SUMMARY

A. Removal and disposal of wastewater liquids and solids from the wastewater treatment facilities.

B. Waste sludge handling & disposal to be removed from the following locations:
   1. Southside Drying Beds prior to beginning initial demolition for Southside Improvements (to be included in bid item for "Demolition (Initial)")
   2. Northside Drying Beds prior to beginning initial demolition for Southside Improvements (to be included in bid item for "Demolition (Initial)")
   3. Southside Stormwater Pond prior to beginning stormwater pond improvements (to be included in the price bid for "Secondary FEB Concrete Lining & Sludge Disposal")
   4. Northside existing treatment units prior to beginning final demolition (to be paid from bid item "Waste Sludge Handling & Disposal from Existing Treatment Units Prior to Final Demolition (Northisde & Southside).")
   5. Southside existing treatment units prior to beginning demolition (to be paid from bid item "Waste Sludge Handling & Disposal from Existing Treatment Units Prior to Final Demolition (Northisde & Southside).")

C. Quantity and character of sludge will vary from location to location and bid price should per for waste sludge handling should be an average price for overall quantity.

D. It is the contractor's responsibility to verify the total amounts in each basin prior to bid.

E. No adjustment in price or unit price will be made based on actual quantities.

1.2 RELATED SECTIONS

A. Section 01_00_01 Basic Requirements

B. Section 02_41_00 Demolition

C. The Contract Documents are a complete unit and complementary to each other. The individual Specification sections and other Contract Documents do not contain all cross references to "related work" or "related sections." It is the Contractor's responsibility to review the complete Contract Documents in order to properly scope, schedule and coordinate the work of any/all subcontractors, suppliers, and others on this project. Anything called out in one location of the Contract Documents is binding as if it were called out in all sections of the Contract Documents.

1.3 SUBMITTALS

A. Submittals for products and miscellaneous items in this specification section shall be submitted in accordance with Section 01_33_01 General Submittal Requirements and related submittal sections and provisions of the Contract Documents.

1.4 DEFINITIONS

A. Process Sludge: This material is the liquid volume of existing tankage and mixture of process water, mixed liquor, organic settled solids and sludge that will be transferred by the Contractor to another treatment basin as approved by the Owner. **The transfer of process sludge will be required prior to complete construction activities (demolition and rehabilitation of Southside stormwater pond.)**

B. Waste Sludge: This material includes an undetermined volume and mixture of grit, inorganic settled solids and sludge that will be removed and disposed by the Contractor. **The disposal of waste sludge will be required to complete construction activities (demolition and rehabilitation of Southside stormwater pond.)**

C. Sludge Management Plan (SMP): A plan for removing, processing, treating, storing, transporting, and disposing of mixed liquor, settled solids, partially digested sludge, and sludge in addition to soils intermixed with the various types of sludge.

D. Sludge Disposal / Disposition Plan (SDP): A plan for sludge removed from the treatment facility and disposed of in a landfill.

E. Added Water: This water is added by the Contractor to aide in the removal of, cleaning of, and transport of the existing solids to be removed from the wastewater facilities and disposed of off-site. The added water is the sole responsibility of the Contractor. The volume of added water is not included in the specified volumes of the bid quantities of material to be removed from the wastewater facilities. The Contractor is responsible for all effort and costs required to provide, use, transport, and dispose of added water used in the tasks associated with liquid and solids removal. The Contractor shall include all costs for added water in the base bid quantity prices and the Bid Form Unit Prices for Sludge Removal. The Contractor's use of added water shall not be grounds for a scope change nor a contract change.

F. Sludge Removal: Construction activities to remove mixed liquor, settled solids, partially digested sludge, and sludge from any wastewater treatment facility in an effort to gain access for subsequent construction activities and/or cleaning of a facility to facilitate inspection, repair, demolition, and/or other construction activities as required by the Contract Documents.

G. Treatment Basin: Structures, both existing and new, whose primary function is to hold, treat and/or process wastewater, wastewater solids, and sludge.

H. Project Locations: Facilities from which sludge is to be removed.

1.5 SCHEDULING & SEQUENCING

A. Conduct sludge removal only after schedule has been approved by the Owner and the Contractor has submitted SMP or SDP and received written approval of same from ODEQ Contractor, with Owner's approval, may make use of existing SMP/SDP in place. Coordinate with Owner prior to bid. Sludge removal schedule and sequencing must allow for continued operation of the facilities. If land application is used for disposal, apply sludge only after adequate erosion and sediment controls are in place.

1.6 MEASUREMENT & PAYMENT

A. Process Sludge Handling:
   1. Measurement: Will not be measured. It is considered to the be the full volume of any tankage that is required to be drained to execute construction activities (demolition and rehabilitation of Southside stormwater pond.)
   2. Payment is subsidiary to Demolition. Payment shall be full compensation for the following: equipment, labor, any added water, gas/fuel, sludge and soil testing, spill clean-up, and temporary pumping and piping. Contractor is responsible for all efforts and costs associated with procuring, transport, and final disposal of any added water.

B. Waste Sludge Handling and Disposal for Initial Demolition:
   1. Will not be measured for payment and shall be included in the price bid for demolition.

C. Waste Sludge Handling and Disposal for Final Demolition:
   1. Measurement: The units scheduled for demolition or rehabilitation will be drained of Process Sludge to the minimum level practical. Prior to removal of any Waste Sludge, the Owner, Engineer, and Contractor will agree on that the remaining sludge is of a nature that cannot be processed by the treatment plant. Upon agreement the sludge depth will be measured at each corner and at least one point in the center of the basin. The depth measurements along with the basin plan view area will used to calculate cubic yards of Waste Sludge to be disposed of. No payment will be made for Added Water.
   2. Payment: Payment for sludge disposal will be by the cubic yard of sludge disposed at the Bid Price listed in the Bid Proposal. The Bid Item will be full compensation for removal of waste sludge, dewatering, hauling, landfill tipping fees, permitting, tools, labor and any other incidentals required to complete the work.

PART 2 PRODUCTS (NOT USED)

PART 3 EXECUTION

3.1 GENERAL

A. The Contractor with coordination from the Owner will be responsible for transferring Process Sludge from one basin to another.

B. Contractor is responsible for removal, handling and disposal of all Waste Sludge, including the material resulting from the tanks' cleaning.

C. Remove Waste Sludge from the existing basins within the limits shown or specified and dispose of the Waste Sludge in accordance with a ODEQ approved SMP or SDP. The Contractor shall also be responsible for removing and handling any waste sludge from the new basins in accordance with an ODEQ approved SMP or SDP as required for his construction activities within these new basins.

D. Contractor is responsible for all expenses related to Process Sludge removal and transfer, which shall be covered under the base bid.

E. Contractor is responsible for maintaining and protecting all roads, drives, dikes, equipment, structures, etc during sludge removal, processing, land application, hauling, and disposal and shall repair any damaged as a result of their work.

F. The Contractor will be required to keep a Daily Record and a Project Record, of the volume of liquid biosolids land-applied each day. The Daily Record will need to be provided to the Project Manager, or his designee, at the end of each workday. The Project Record will need to be provided to the Owner, or designee, at the end of the project.

G. The Contractor will communicate daily with the Engineer to determine which land application site will be used. This discussion is also designed to ensure that the Contractor does not over apply biosolids to any approved application site.

H. The Contractor will be responsible for biosolids sampling, sample preservation, sample delivery, and storage in accordance with methods developed by the City of Shawnee Wastewater Treatment Plant Laboratory Staff or standard practice is no methods have been developed.

I. The Contractor is required to maintain a cooperative and courteous relationship with the landowner while delivering and land-applying sludge, grit, and biosolids. Care shall be taken to leave the fields and roadway in reasonable condition upon project completion.

3.2 PROJECT LOCATION

A. As follows, but not to extend beyond Project limits.
   1. Northside
      a. All existing units
      b. All piping that requires wastewater and sludge removal
      c. All other treatment plant facilities that require dewatering and cleaning to perform the work.
   2. Southside
      a. All existing units
      b. Existing stormwater pond
      c. All piping that requires wastewater and sludge removal
      d. All other treatment plant facilities that require dewatering and cleaning to perform the work.

3.3 TREATMENT BASIN CLEANING

A. Transfer Process Sludge to another basin designated by the Owner and take measurements of Waste Sludge In-Situ prior to commencing cleaning activities.

B. Remove sludge from the Treatment Basins within limits or as specified or directed.

3.4 EQUIPMENT

A. Provide necessary equipment for Process Sludge transfer from on basin to another Owner designated basin.

B. Provide necessary equipment for Waste Sludge removal, transport from the facility to the disposallocation, and final application or disposal.

C. Provide necessary equipment for added water, procurement, transport from the facility to thedisposal location, and final application or disposal.

3.5 DISPOSAL PERMITTING

A. Contractor will be responsible for registration, authorization, and/or permitting of the land application with the appropriate regulatory agencies and shall pay the related regulatory fees.

B. Contractor will maintain all chain of custody forms and provide documentation of all sludgevolumes land applied and the application sites.

3.6 TESTING

A. Contractor will be responsible for obtaining all sludge and soil samples and their required labanalyses for permitting.

B. Contractor will pay for the lab analysis and will include such lab analysis expenses with as part ofthe Work.

3.7 DISPOSAL

A. Apply the sludge and/or added water for beneficial use as fertilizer/soil amendment or dispose ofthe material using a disposal method approved by the appropriate permitting agency.

B. When sludge application is via the subsoil injection method, such application shall be accordingto sound agronomic rates.

C. Contractor is responsible for determining application rates based on cover crops and analyticaltesting of the sludge.

D. Contractor may remove and separately dispose of oil/grease from the sludge prior to land application.

E. Contractor is responsible for providing commercially reasonable handling of sludge once it hasbeen collected, including cleanup of any spills.

F. Contractor is responsible for meeting the dewatering requirements of landfill disposal.

3.8 RECORD KEEPING

A. Maintain records of sludge application and submit records to Engineer, Owner, and regulatingagencies, as required by this specification and any related permits.

3.9 BIDDING QUANTITIES

A. Process Sludge Removal
   1. Will not be measured for payment and will be included in the price bid for demolition.

B. Waste Sludge (initial demolition)
   1. Will not be measure for payment and will be included in the price bid for demolition.

C. Waste Sludge Removal (final demolition)
   1. Contractor is responsible to remove and dispose of the waste sludge volumes listed in the bid proposal from the designated structures to be demolished.
   2. The volume listed is for reference only, payment will be based on the total quantity of Waste Sludge removed from all facilities. No additional payment will be made if quantities removed exceed the estimated quantity listed for any individual facility unless the total quantity is exceeded (both facilities.) If the total quantity removed meets the total estimated, sludge removal will stop until the Owner and Contractor agree to contract modification to handle the remaining Waste Sludge.

END OF SECTION

SECTION 33_05_05.17

MECHANICAL JOINT RESTRAINT

PART 1 GENERAL

1.1 SCOPE OF WORK

A. Restraint devices for mechanical joint fittings and appurtenances conforming to either ANSI/AWWA C111/A2 or ANSI/AWWA C 153 shall conform to the following specifications.

1.2 SUBMITTALS

A. Submit in accordance with Section 01_33_01 General Submittal Requirements

1.3 SYSTEM DESCRIPTION/DESIGN REQUIREMENTS

A. Restraint devices for nominal pipe sizes 3 inch through 48 inch shall consist of multiple gripping wedges incorporated into a follower gland meeting the applicable requirements of AWWA C110

B. The devices shall have a working pressure rating of 350 psi for 3-16 inch and 250 psi for 18-48 inch. Ratings are for water pressure and must include a minimum safety factor of 2 to 1 in all sizes.

PART 2 PRODUCTS

2.1 MANUFACTURERS

A. Mechanical joint restraint shall be Megalug Series 1100 produced by EBAA Iron Inc. or approved equal.

2.2 MATERIALS

A. Gland body, wedges and wedge actuating components shall be cast from grade 65-45-12 ductile iron material in accordance with ASTM A536.

B. Ductile iron gripping wedges shall be heat treated within a range of 370 to 470 BHN.

2.3 COATING SYSTEM

A. Coating for restraint devices shall be MEGA-BOND by EBAA Iron, Inc. or approved equal.
   1. All wedge assemblies and related parts shall be processed through a phosphate wash, rinse and drying operation prior to coating application. The coating shall consist of a minimum of two coats of liquid thermoset epoxy coating with heat cure to follow each coat.
   2. All casting bodies shall be surface pretreated with a phosphate wash, rinse and sealer before drying. The coating shall be electrostatically applied and heat cured.

The coating shall be a polyester-based powder to provide corrosion, impact and UV resistance.

PART 3 EXECUTION

3.1 INSTALLATION

A. Mechanical joint restraint shall require conventional tools and installation procedures per AWWA C600, while retaining full mechanical joint deflection during assembly as well as allowing joint deflection after assembly.

B. Proper actuation of the gripping wedges shall be ensured with torque limiting twist off nuts.

C. Installation shall be per manufacturer's requirements

END OF SECTION

SECTION 33_05_07.13

UTILITY DIRECTIONAL DRILLING

PART 1 GENERAL

1.1 SECTION INCLUDES

A. Furnish all labor, materials, and equipment required to install utility lines using the horizontal directional drilling method in accordance with the requirements of the Contract Documents.
   1. The pipe size, type, and length shall be as specified herein and as shown on the drawings.
   2. Work shall include, but not be limited to, proper installation, testing, restoration of underground utilities, and environmental protection and restoration.

B. The directional drill shall be accomplished by first drilling a pilot hole along the centerline of the proposed pipe and then enlarging the pilot hole to no more than 1.5 times the outer diameter of the couplings (or the outer diameter of the pipe if no couplings are used) to accommodate the pull back of the pipe through the enlarged hole.

C. Soil borings as required for certain subsurface soil conditions shall be provided by the Contractor within the scope of this project.

D. Contractor to comply with any/all State Department of Transportation permits and shall notify State (if required) before construction in ROW.

E. Where a Permit is required the Contractor shall keep a copy of the permit onsite at all times and it shall be followed strictly and supersede any conflicting areas of this specification.

F. The Contractor must have installed a minimum of 15,000 linear feet of pipe in the last 4 years (24" diameter or greater) using directional drilling operations.
   1. Prequalified contractors who have previously demonstrated the capabilities and qualifications to perform this work include:
      a. Del-Sha Directional Drilling, Van Buren, AR (479-262-2670.)

1.2 SUBMITTALS

A. All submittals shall be in accordance with Section 01_33_01.

B. The Contractor shall submit a list of previous projects completed showing that the Contractor meets the experience requirements of this Specification (See 1.1F.) No exceptions. The list of projects supplied to demonstrate experience requirement shall include:
   1. The Owner of the project.
   2. Type of line installed (e.g. – water, sewer, etc.).
   3. Pipe material, size, and length installed by horizontal directional drilling.

4. Dates of installation.

C. Product data sheets on the materials to be used shall be submitted to the Engineer. Material shall include the pipe, fittings, and any other item that is to be an installed component of the project.

D. Material Safety Data Sheets for all drilling fluid additives shall be submitted to the Engineer.

E. The Contractor shall submit a daily project log of drilling operations at the completion of the project.

1.3 QUALITY ASSURANCE

A. The Contractor must have installed a minimum of 15,000 linear feet of pipe in the last 4 years (24" diameter or greater) using directional drilling operations.
1. The Contractor shall submit a list of previous projects completed showing that the Contractor meets the experience requirements of this section. The list shall include:
a. The Owner of the project.
b. Type of line installed (e.g. – water, sewer, etc.).
c. Pipe material, size, and length installed by horizontal directional drilling.
d. Dates of installation.

B. Notify Engineer and Owner a minimum of three (3) days in advance of the start of work.

PART 2 PRODUCTS

2.1 MATERIALS

A. Pipe materials shall be as specified on the plans and in other specification sections.

B. Steel pipe, ductile iron pipe and PVC pipe may be used as encasement material as shown on the Plans. The nominal inside diameter of the encasement pipe shall be as shown on the Plans
1. Steel Pipe: Encasement pipe shall conform to all requirements set forth Section 33_05_25 Steel Casing Pipe and be of the diameter as specified on the Drawings. Any variation of diameter and wall thickness, as may be required for various types of carrier pipe, shall be approved by the Engineer prior to installation.
2. Ductile Iron Pipe: Encasement pipe shall conform to AWWA C150 and C151. Pipe shall be thickness class 250 or greater, unless otherwise shown on the plans.
3. HDPE Pipe: Encasement pipe shall be DR-13 minimum, unless otherwise shown on plans.
4. PVC Pipe: Encasement pipe shall conform to ASTM D2241 or AWWA C905. Pipe shall be DR 26 or SDR 26, unless otherwise shown on the plans.
5. Casing Spacers: Casing spacers shall be Racii type or approved equal as shown on the Plans. Installation of casing spacers shall be in accordance with the manufacturer's recommendations.

6. End Seals: End seals shall be minimum 1/8" thick synthetic rubber with stainless steel bands. Other methods of sealing the end of the encasement pipe shall be constructed only upon pre-approval by the Engineer.
7. Carrier Pipe: Carrier pipes shall conform to all requirements set forth and be of the diameter and material as specified on the Plans and as indicated in the bid proposal.

2.2 DIRECTIONAL DRILLING EQUIPMENT REQUIREMENTS

A. General

1. The directional drilling equipment shall consist of a directional drilling rig of sufficient capacity to perform the bore and pull back the pipe, a drilling fluid mixing, delivery, and recovery system of sufficient capacity to successfully complete the installation, a drilling fluid recycling system to remove solids from the drilling fluid so that the fluid can be reused (if required), a magnetic guidance system or "walkover" system to accurately guide boring operations, and trained and competent personnel to operate the system.
2. All equipment shall be in good, safe condition with sufficient supplies, materials, and spare parts on hand to maintain the system in good working order for the duration of this project.

B. Drilling Rig
1. The directional drilling machine shall be able to rotate and push hollow drilling pipe into the ground at a variable angle while delivering a pressurized fluid mixture to a guidable drill (bore) head.
2. All hydraulic systems shall be free of leaks.
3. The rig shall have a system to monitor and record maximum pull-back pressure during pull-back operations.
4. There shall be a system to detect electrical current from the drill string and an audible alarm that automatically sounds when an electrical current is detected.

C. The drill head shall be steerable by changing its rotation and shall provide necessary cutting surfaces and drilling fluid jets.

D. Mud motors (if necessary) shall be of adequate power to turn the required drilling tools.

E. Guidance System
1. General
a. An electronic "walkover" tracking system or a magnetic guidance system probe or proven (non-experimental) gyroscopic probe and interface shall be used to provide a continuous and accurate determination of the location of the drill head during the drilling operation.
b. The guidance system shall be capable of tracking at all depths up to fifty feet and in any soil condition including hard rock.

c. It shall enable the driller to guide the drill head by providing immediate information on the tool face, azimuth (horizontal direction), and inclination (vertical direction).
d. The guidance system shall be accurate and calibrated to the manufacturer's specifications.

2. The Contractor shall supply all components and materials to install, operate, and maintain the guidance system.
3. The magnetic guidance system shall be set up and operated by personnel trained and experienced with the system.
4. The Contractor shall be aware of any geo-magnetic anomalies and shall consider such influences in the operation of the guidance system.

F. Drilling Fluid System

1. The Contractor shall use a self-contained, closed, drilling fluid mixing system of sufficient size to mix and deliver drilling fluid as necessary to install the pipe according to the plans and specifications and to prevent damage to existing utilities and improvements.
2. Drilling fluids shall have additives as necessary to carry cuttings away from the bore face, lubricate the pipe installation, and prevent damage to existing utilities and improvements.
3. The delivery system shall be capable of delivering the drilling fluid at the rate necessary to carry cuttings away from the bore face, lubricate the pipe installation, and prevent damage to existing utilities and improvements.

G. Other Equipment

1. Other devices or utility placement systems for providing horizontal thrust other than those previously defined in the preceding sections shall not be used unless approved by the Engineer prior to commencement of the work.

2.3 PERSONNEL REQUIREMENTS

A. All personnel shall be fully trained in their respective duties as part of the directional drilling crew and in safety.

B. One competent and experienced supervisor representing the Contractor and another representing the drilling subcontractor, if such a subcontractor is used, shall be present at all times during the actual drilling operations.

1. A responsible representative who is thoroughly familiar with the equipment and type of work to be performed must be in direct charge and control of the operation at all times.
2. The Contractor and Subcontractor shall have a sufficient number of competent workers on the job at all times to insure the bore is made in a timely and satisfactory manner.

2.4 Personnel who are unqualified, incompetent, or otherwise not suitable for the performance of this project shall be removed from the job site and replaced with suitable personnel.

PART 3 EXECUTION

3.1 GENERAL REQUIREMENTS

A. The Engineer must be notified a minimum of three days in advance of starting work.

B. All work under this specification shall be carried out to the full satisfaction of representatives of the owners of any affected properties, right-of-ways, or facilities.

C. The Contractor shall fully inform himself of all requirements of permits as they pertain to specific project requirements and shall conduct all his work accordingly.

D. All equipment used by the Contractor on Owner's property and right-of-ways may be inspected by the Owner or the Owner's representative and shall not be used if considered unsatisfactory by Owner or Owner's representative.

E. The Contractor shall be fully responsible for all damages arising from his failure to comply with all applicable regulations and the requirements of these Specifications.

F. The Contractor is responsible for determining the length of bore that is appropriate for the pipe material and class specified and shown on the plans. The length to be installed may need to be divided into multiple segments. Indicate the number of segments on the bore plan submitted to the Engineer. Any pipe damaged during installation shall be replaced to the Engineer's satisfaction at the Contractor's expense.

G. The conduit, or encasement, to be installed shall extend to the distances as shown on the Plans.

H. If necessary to prevent cave-ins, sheet, shore or brace pits in accordance with OSHA regulations. All pits shall be closed at the end of each work day if possible. Any pit left open overnight shall be properly barricaded and secured in accordance with OSHA and ODOT regulations.

I. Location of all pits shall be approved by the Engineer.

J. The Contractor shall furnish, for the approval of the Engineer, a plan showing his proposed method of handling, arrangement and positioning of boring equipment, type of equipment to be used, pipe guides, etc., complete in assembled position. The approval of this plan by the Engineer will not relieve the Contractor from his responsibility to obtain the results herein or as shown on the Plans.

K. An approximate 2" pilot hole shall be bored the entire length of the bore and shall be checked for line and grade on the opposite end of the bore from the bore pit. This pilot hole shall serve as the centerline of the larger diameter hole to be bored.

L. Any pipe damaged in boring operations shall be removed and replaced by the Contractor at his expense. The pits or trenches excavated to facilitate boring operations shall be backfilled completely after the boring of the pipe has been completed and approved.

3.2 DRY BORING

A. The boring shall proceed from a pit provided for the boring equipment and workmen. Only workmen experienced in boring operations shall perform the work in accordance with the Engineer approved bore plan. When boring of pipe is begun, the operation shall be carried on without interruption, insofar as practicable, to prevent the pipe from becoming firmly setin the embankment.

B. The use of water or other fluids in connection with the boring operation will NOT be permitted except for a minor amount of bentonite solution required for the cutting head.

C. The conduit shall be installed in the bore hole simultaneously while the bore is being made. Proper care should be taken to secure the joints of the conduit as subsequent sections are installed. A steel rail or timber cradle shall be provided to support and guide the encasement pipe during installation.

D. If, after completion of the bore, there is more than 1" clearance between the outside of the conduit and the bore wall, grouting of this void will be required. If during installation a cave- in occurs within the bore, grouting of the voids will be required between the conduit and the bore wall for the full length of the bore.

E. Bores located within public rights-of-way shall conform to the requirements of the agency having jurisdiction over the right-of-way (ODOT, Railroad, County, City, etc) as to details of construction methods and time of construction. All work necessary to meet the requirements of said agencies shall be considered subsidiary to the installation of the pipeline in the right-of-way. The Contractor shall abide by the more stringent of these specifications, or the specifications of the regulatory agencies.

3.3 WET BORING

A. The boring shall proceed from a pit provided for the boring equipment and workmen. Only workmen experienced in boring operations shall perform the work in accordance with the Engineer approved bore plan. A pilot hole must be successfully completed to the satisfactionof the Engineer prior to back reaming the bore.

B. The use of water or other fluids in connection with the boring operation will be permitted only to lubricate cuttings. Jetting will not be permitted.

C. While boring is being performed, the conduit shall be installed immediately by pulling it in place from opposite the boring machine. Proper care should be taken to secure the joints of the conduit as subsequent sections are installed.

D. If, after completion of the bore, there is more than 1" clearance between the outside of the conduit and the bore wall, grouting of this void will be required. If during installation a cave- in occurs within the bore, grouting of the voids will be required between the conduit and the bore wall for the full length of the bore.

E. Grouting materials and equipment shall be on site bore beginning conduit installation to ensure that grouting, if necessary, begins immediately after conduit is in place.

F. Bores located within public rights-of-way shall conform to the requirements of the agency having jurisdiction over the right-of-way (ODOT, Railroad, County, City, etc) as to details of construction methods and time of construction. All work necessary to meet the requirements of said agencies shall be considered subsidiary to the installation of the pipeline in the right-of-way. The Contractor shall abide by the more stringent of these specifications, or the specifications of the regulatory agencies.

3.4 HORIZONTAL DIRECTIONAL DRILLING OPERATION

A. The Contractor shall provide all material, equipment, and facilities required for directional drilling.
   1. Proper alignment and elevation of the borehole shall be consistently maintained throughout the directional drilling operation.
   2. The method used to complete the directional drill shall conform to the requirements of all applicable permits.
   3. The Engineer will supply to the Contractor copies of all permits the Owner must obtain.

B. If the Contractor is using a magnetic guidance system, the drill path shall be surveyed for any geo-magnetic variations or anomalies.

C. The Contractor shall place silt fence or other erosion control measures between all drilling operations and any drainage path, well, wetland, waterway, or other area designated for such protection if required by the plans, specifications, or state, federal, or local regulations.
   1. Additional protection necessary to contain any hydraulic or drilling fluid spills shall be put in place, including berms, liners, turbidity curtains, and other measures.
   2. A berm, minimum of 12-inches high, shall be maintained around the drill rig, the drilling fluid mixing system, entry and exit pits, and the drilling fluid recycling system to prevent spills into the surrounding environment.
   3. The Contractor shall adhere to all applicable environmental regulations.

D. All recorded readings and plan and profile information shall be made available if requested by the Engineer.

E. At no time shall the deflection radius of the drill pipe exceed the deflection limits of the carrier pipe as specified herein.

F. All drilling fluids and loose cuttings shall be contained in pits or holding tanks for recycling or disposal. No fluids shall be allowed to enter any unapproved areas or natural waterways.

G. Upon completion of the directional drill project, the drilling mud and cuttings shall be disposed of by the Contractor at an approved dumpsite. Pumping equipment and/or vacuum trucks of sufficient size and number shall be in place to convey drilling fluid from containment areas to storage and recycling facilities or disposal.

H. The pilot hole shall be drilled on the bore path with no deviations greater than 5% of the depth or one foot (whichever is less) for water lines and no deviations greater than one inch for sanitary sewer lines.
   1. In the event that the pilot hole does deviate from the bore path more than specified, the Contractor will notify the Engineer and may be required to pull-back and re-drill from a location along the bore path before the deviation.
   2. In the event of a drilling fluid fracture, inadvertent returns, or returns loss during pilot hole drilling operations, Contractor shall cease drilling, discuss options with the Engineer, and then proceed as agreed.

I. The slurry used during pull-back is to be contained at the exit and entry points in pits or holding tanks.

J. The slurry may be recycled for reuse in the hole opening operation or shall be hauled by the Contractor to an approved dumpsite for proper disposal.

3.5 PIPE HANDLING

A. Care shall be taken during transportation of the pipe such that it will not be cut, kinked, or otherwise damaged.

B. Ropes or fabric or rubber protected slings or straps shall be used when handling pipe.
   1. Chains, cables, or hooks inserted into the pipe ends shall not be used.
   2. Two slings spread apart shall be used for lifting each length of pipe.
   3. Pipe or fittings shall not be dropped into rocky or unprepared ground

C. Pipe shall be stored on level ground, preferably turf or sand, which is free of sharp objects that could damage the pipe.

D. The handling of the assembled pipeline shall be in such a manner that the pipe is not damaged by dragging it over sharp and cutting objects.
   1. Slings for handling the pipeline shall not be positioned at pipe joints.
   2. Sections of the pipes with cuts and gouges or excessive deformation shall be removed and replaced.

END OF SECTION

SECTION 33_05_07.33

UTILITY BORING & JACKING

PART 1 GENERAL

1.1 SCOPE OF WORK

A. Utility line crossings roadways & railroads or other items specified on the Drawings using bore, tunneling, or open cut. Cost bid to include vent pipes per ODOT/Railroad requirements.

B. The Contractor performing boring operations on this project must have installed a minimum of 15,000 linear feet of pipe in the last 4 years (24" diameter or greater) using directional drilling operations.
   1. Prequalified contractors who have previously demonstrated the capabilities and qualifications to perform this work include:
      a. Del-Sha Directional Drilling, Van Buren, AR (479-262-2670.)

1.2 RELATED SECTIONS

A. Section 01_00_01 Basic Requirements

B. Section 01_33_01 General Submittal Requirements

C. Section 33_05_25 Steel Casing Pipe

D. Section 33_05_07 Utility Directional Drilling

E. The Contract Documents are a complete unit and complementary to each other. The individual Specification sections and other Contract Documents do not contain all cross references to "related work" or "related sections." It is the Contractor's responsibility to review the complete Contract Documents in order to properly scope, schedule and coordinate the work of any/all subcontractors, suppliers, and others on this project. Anything called out in one location of the Contract Documents is binding as if it were called out in all sections of the Contract Documents.

1.3 SUBMITTALS

A. Submittals for products and miscellaneous items in this specification section shall be submitted in accordance with Section 01_33_01 General Submittal Requirements and related submittal sections and provisions of the Contract Documents.

B. The Contractor shall submit a list of previous projects completed showing that the Contractor meets the experience requirements of this Specification (See 1.1F.) No exceptions. The list of projects supplied to demonstrate experience requirement shall include:
   1. The Owner of the project.
   2. Type of line installed (e.g. – water, sewer, etc.).
   3. Pipe material, size, and length installed by horizontal directional drilling.

4. Dates of installation.

C. Product data sheets on the materials to be used shall be submitted to the Engineer. Material shall include the pipe, fittings, and any other item that is to be an installed component of the project.

D. Material Safety Data Sheets for all drilling fluid additives shall be submitted to the Engineer.

E. The Contractor shall submit a daily project log of drilling operations at the completion of the project.

1.4 REFERENCE STANDARDS

A. AWWA C-206 – "Field Welding of Steel Water Pipe"

B. AWWA C-210 – "Liquid Epoxy Coating Systems for the Interior and Exterior of Steel Water Pipelines"

C. AASHTO M-190 – "Bituminous Coated Corrugated Metal Culvert Pipe and Pipe Arches"

D. AASHTO – Standard Specifications for Highway Bridges, 1989.

E. ASTM A-36 – "Structural Steel"

F. ASTM A-123 – "Zinc (Hot Dipped Galvanized) Coatings on Iron and Steel Productss

G. ASTM A-135 – "Electric - Resistance - Welded Steel Pipe"

H. ASTM A-139 – "Electric - Fusion (Arc) - Welded Steel Pipe"

I. ASTM A-153 – "Zinc Coating (Hot Dip) on Iron and Steel Hardware"

J. ASTM A-307 – "Carbon Steel Bolts and Studs, 60,000 PSI Tensile"

K. ASTM A-449 – "Quenched and Tempered Steel Bolts and Studs"

L. ASTM A-569 – "Steel, Carbon, Hot-Rolled Sheet and Strip, Commercial Quality"

M. ASTM A-570 – "Hot Rolled Carbon Steel Sheet and Strip, Structural Quality"

N. ASTM C-76 – "Reinforced Concrete Culvert, Storm Drain, and Sewer Pipe"

O. ASTM D-4254 – "Test Methods for Minimum Index Density of Soils and Calculation of Relative Density"

1.5 QUALITY ASSURANCE

A. Installer's Qualifications:
1. Installation shall be by a competent, experienced Contractor or sub-contractor.

2. The Contractor performing boring operations on this project must have installed a minimum of 15,000 linear feet of pipe in the last 4 years (24" diameter or greater) using directional drilling operations.
3. Prequalified contractors who have previously demonstrated the capabilities and qualifications to perform this work include:
   a. Del-Sha Directional Drilling, Van Buren, AR (479-262-2670.)
4. The Contractor shall submit a list of previous projects completed showing that the Contractor meets the experience requirements of this section. The list shall include:
   a. The Owner of the project.
   b. Type of line installed (e.g. – water, sewer, etc.).
   c. Pipe material, size, and length installed by horizontal directional drilling.
   d. Dates of installation.

B. Performance Requirements:
1. Lateral or vertical variation in the final position of the pipe casing or tunnel liner from the line and grade established by the Engineer shall be acceptable only to the extent that it does not impact the line and grade of the carrier pip shown on the Plans.

1.6 SYSTEM DESCRIPTION/DESIGN REQUIREMENTS

A. No blasting shall be allowed.

B. Existing pipelines are to be protected.

1. The Contractor shall verify location and elevation of any pipelines and telephone cable before proceeding with the construction and plan his construction so as to avoid damage to the existing pipelines or telephone cables.

2. Verification of location of existing utilities shall be the complete responsibility of the Contractor.

C. Casing Material:

1. Unless specified otherwise, the Contractor shall use steel pipe for all casing pipe.

2. The material specification for casing pipe and tunnel liner are the minimum acceptable.

3. The Contractor shall be fully responsible to insure the materials used are of sufficient strength for the installation method chosen and the soil conditions encountered.

D. Bore And Tunnel Methods:

1. Unless specified otherwise, the Contractor may use boring, and jacking for the installation method of casing material.

2. The Contractor shall be fully responsible to ensure the methods used are adequate for the protection of workers, pipe, property, and the public. Provide a finished product as required.

PART 2 PRODUCTS

2.1 MATERIALS

A. Steel Pipe:
1. Steel casing pipe shall have a minimum yield strength of 35,000 psi.
2. Steel casing pipe to be installed within Railroad Right-of-way shall becoated with coal tar epoxy meeting the requirements of Corp of EngineersSpecification C-200A. Coal tar epoxy shall be installed in two 8 mil coats for a total DFT of 16 mils. Welded joints shall be field coated. All other casing installed outside of Railroad Right-of-way may be uncoated.
3. For additional information see Section 33_05_25 Steel Casing Pipe.

2.2 MIXES

A. Cement Mortar:
1. Consisting of one (1) part cement to two (2) parts clean sand with sufficient water to make a thick workable mix.

B. Pressure Grout Mix:
1. Comprised of 1 cubic foot of cement and 3.5 cubic feet of clean fine sand with sufficient water added to provide a free-flowing thick slurry.
2. If desired to maintain solids in the mixture in suspension, one cubic foot of commercial grade bentonite may be added to each 12 to 15 cubic feet of the slurry.

2.3 MANUFACTURED PRODUCTS

A. Casing Insulators:
1. Use casing insulators for all types of carrier pipe.
2. Insulators shall consist of pre-manufactured steel bands with plastic lining and plastic runners.
3. Insulators shall fit snug over the carrier pipe and position the carrier pipe approximately in the center of the casing pipe, to provide adequate clearance between the carrier pipe bell and the casing pipe.
4. Fasteners for insulators shall be stainless steel.
5. Insulators shall be as manufactured by Advanced Product and Systems, Inc., Model #SSI, or Engineer approved equal.

B. End Seals:
1. All casing shall be sealed.
2. Seals shall be one-piece rubber with stainless steel bands.
3. End seal shall be molded to fit the casing pipe and carrier pipe.

2.4 Advanced Product and Systems, Model #AC or Engineer approved equal.

PART 3 EXECUTION

3.1 GENERAL CONSTRUCTION PROCEDURES

A. Excavation And Backfill of Access Pits
   1. Do not allow excavation over the limits of the bore or tunnel as specified.
      a. Trench walls of access pits adjacent to the bore or tunnel face shall be truly vertical
      b. Shore the trench walls as necessary to protect workmen, the public, structures, roadways, and other improvements.
   2. Excavations within the right-of-way and not under surfacing shall be backfilled and consolidated by tamping in 6" horizontal layers to 95% of maximum density as measured by ASTM D-698.
      a. Surplus material shall be removed from the right-of-way and the excavation finished to original grades.
      b. Backfill pits immediately after the installation of the carrier pipe is completed.
      c. If carrier pipe is not installed immediately after casing pipe installation, the Right-of-Way Owner may require the access pits be temporarily backfilled until installation of carrier pipe.
   3. Where seeding or sodding is disturbed by excavation or backfilling operations, such areas shall be replaced by seeding or sodding as specified.

B. Installing Carrier Pipe in Casings
   1. Pipe to be installed within the casing or tunnel liner shall meet the requirements for this type of pipe as specified.
      a. Where indicated, place, align, and anchor guide rails and/or casing insulators inside the casing.
      b. If guide rails are used, place cement mortar on both sides of the rails.
   2. Pull or skid pipe into place inside the casing.
      a. Lubricants such as flax soap or drilling mud may be used to ease pipe installation.
      b. Do not use petroleum products, oil or grease for this purpose.
      c. If guide rails are used, install pipe and hold down jacks after installation of carrier pipe.
   3. After installation of the carrier pipe, mortar inside and outside of the joints as applicable.
   4. After carrier pipe installation is complete, install required end seals at each end of the casing.

C. Free-Air System:
   1. If required by OSHA standards, free-air systems shall be installed and maintained.

D. Installation of Pressure Grout Mix
   1. Install pressure grout mix in the void space between the outside of the casing pipe or tunnel liner and the excavation.
   2. For bore or jacks with casing pipe, install pressure grout mix immediately upon completion of setting casing pipe.

3.2 CROSSINGS INSTALLED BY BORING

A. Perform the boring from the low or downstream end unless specified otherwise.
   1. The casing bore shall be done by auger type boring method. The casing bore shall not be done by directional drilling unless approved by the Engineer prior to bidding.
   2. Place excavated material near the top of the working pit and dispose of material as required.
   3. The cutter head shall not extend outside the leading end of the pipe. There shall not be extended pauses during the installation of casing below roadways and/or railroads.
   4. Jetting shall not be permitted.

B. In unconsolidated soil formations, a gel-forming colloidal drilling fluid consisting of at least 10% of high grade carefully processed bentonite may be used to consolidate cuttings of the bit, seal the walls of the hole, and furnish lubrication for subsequent removal of cuttings and installation of the pipe immediately thereafter.

C. In locations where the soil formation is other than consolidated rock, insert the casing pipe simultaneously with the boring operation.
   1. This requirement applies to all bored holes of 18" or greater in diameter.
   2. For smaller diameter bored holes, it is desirable that the casing be installed as the boring progresses, but because of differences in soil formations, the time for inserting the casing shall be the Contractor's responsibility.
   3. In the event that caving sand or water bearing materials are encountered, insert the casing pipe simultaneously with the boring operation regardless of the diameter of the bored hole.
   4. In all cases, the security and integrity of the roadway/railroad is the primary concern.
   5. The Contractor shall be held fully responsible for the continued integrity of the structure of the roadway/railroad being crossed, whether or not a casing pipe is inserted simultaneously with the boring operation.

3.3 CROSSINGS INSTALLED BY TUNNELING AND JACKING

A. Jack the pipe from the low or downstream end, unless specified otherwise.
   1. Provide heavy-duty jacks suitable for forcing the pipe through the embankment.
   2. In operating jacks, apply even pressure to the jacks used.
   3. Provide a suitable jacking head and bracing between jacks so that pressure will be applied to the pipe uniformly around the ring of the pipe.
   4. Provide a suitable jacking frame or backstop.
   5. Set the pipe to be jacked on guides, properly braced together, to support the section of the pipe and to direct it in the proper line and grade.
   6. Place the whole jacking assembly so as to line up with the direction and grade of the pipe.
   7. In general, excavate embankment material just ahead of the pipe and material removed through the pipe.
   8. Force the pipe through the embankment with jacks into the space provided.

B. The excavation for the underside of the pipe, for at least 1/3 of the circumference of the pipe, shall conform to the contour and grade of the pipe.

1. Provide a clearance of not more than 2" for the upper half of the pipe.
2. This clearance shall be tapered off to zero at the point where the excavation conforms to the contour of the pipe.
3. Extend the distance of the excavation beyond the end of the pipe depending on the character of the material, but do not exceed 2' in any case.
4. Decrease the distance if the character of the material being excavated makes it desirable to keep the advance excavation closer to the end of the pipe.

C. If desired, use a cutting edge of steel plate around the head end of the pipe extending a short distance beyond the end of the pipe with inside angles or lugs to keep the cutting edge from slipping back onto pipe.

D. When jacking of pipe has begun, carry on the operation without interruption to prevent the pipe from becoming firmly set in the embankment.
1. Remove and replace any pipe damaged in the jacking operations.
2. The Contractor shall absorb the entire expense.

3.4 CROSSINGS WITH CASING INSTALLED BY OPEN CUT

A. This article covers the requirements for the construction of crossings where pipe casing is required for installation by the open cut method.

B. Excavation, backfill, and embedment of casing pipe shall be as specified.

C. Casing shall be bedded in gravel material to the springline of the casing.

D. Contractor shall backfill with select fill material compacted in 8-inch lifts.

E. Contractor shall complete the backfill and repair the pavement section as shown.

F. If settlement occurs, the pavements shall be removed and the trench recompacted at the Contractor’s expense.

END OF SECTION

THIS PAGE INTENTIONALLY LEFT BLANK FOR DOUBLE SIDED PRINTING

SECTION 33_05_09.34

CONCRETE THRUST BLOCKS & COLLARS

PART 1 GENERAL

1.1 SCOPE OF WORK

A. Concrete blocking or anchorage for thrust resistance placed at bends, tees, crosses, fire hydrants, plugs, blow-offs, etc. in the supply line.

PART 2 PRODUCTS (NOT USED)

2.1 MATERIALS

A. Concrete strength shall be at least 3,000 psi at twenty-eight (28) days.

B. 3,000 psi sack-crete may be used but must be hydrated prior to placement.

PART 3 EXECUTION

3.1 CONSTRUCTION METHODS

A. Concrete thrust blocks and anchors shall be provided along pipelines subject to internal water pressures in accordance with Thrust Restraint for Ductile Iron Pipe, (DIPRA, 3rd Edition, 1992), the construction details, plan drawings, or as directed by the Engineer. The concrete mix shall be in accordance with ACI 318, 3,000 psi, for thrust collars and thrust blocks. Admixtures are not to be used without the approval of the Engineer.

B. Concrete for thrust blocks shall be placed against undisturbed soil. The excavation shall be hand shaped and free of loose material and water before concrete is placed. Forms shall be used to confine the concrete in areas other than that part that is in contact with undisturbed soil in the direction of the thrust. Steel reinforcement shall be placed as specified on the Plans. No concrete shall be placed around any part of a joint or placed so that it interferes with the removal of any joint accessories such as bolts, followers, threads, collars, couplings, etc. Fire hydrant drains shall not be restricted. The pipe or appurtenances shall be cleaned before placing concrete when the concrete is to be in direct contact with the pipe or appurtenances.

C. The top of the concrete thrust block or collar shall be struck off with a wood straight edge or float. Concrete shall not be placed when the temperature is below 40° F, or below 35° if the temperature is rising unless approved by the Engineer.

D. All placement of concrete must be in the presence of the Engineer or his representative. TheContractor is cautioned that he may be required to remove any concrete placed in the absence of the Engineer or his representative without compensation.

E. Backfill over concrete thrust blocks or collars shall not be placed before the concrete has attained initial set.

F. The area of contact of the thrust blocks and collars shall be sufficient to resist the thrust. This area will vary, depending on the safe bearing value of the soil. No thrust blocks shall be less than eighteen (18) inches thick between the pipeline or appurtenances and undisturbedsoil in the direction of the thrust. Suggested safe bearing values are as follows:

Soil Bearing Capacities

Soil	Bearing Load (lb./sq. ft.)
Muck	0
Soft Clay	1000
Silt	1500
Sandy Silt	3000
Sand	4000
Sandy Clay	6000
Hard Clay	9000

The above values are approximate and will vary considerably and are intended to be used only as a guide. The Contractor is responsible for determining the soil bearing value or taking other action to assure that the bearing area is adequate to restrain the pipe or appurtenances.

G. Where the soil is unstable or in the case of recent fill areas, the following procedures shall apply either singly or in a combination:
1. Thrust blocks shall be of adequate size to restrain pipe or appurtenances by mass alone without depending on horizontal bearing of the soil.
2. The excavation shall extend deep enough to contact firm soil and the block brought up to the pipe or appurtenances and constructed so that the block acts as a beam and will provide restraint required. Such blocks shall be reinforced with steel reinforcing bars.
3. Anchor blocks shall be constructed in a firm soil and tie rods extended to the pipe orappurtenances.

H. Thrust blocks for vertical bends shall be adequate to resist the thrust by mass alone when the thrust is upward.

I. Thrust blocks and collars shall be adequate to restrain the pipeline and appurtenances atthe specified test pressure. The following table lists the resultant thrust at certain fittings at pressure of 100 psi. In order to determine the thrust at the test pressure, these values are tobe multiplied by a factor equal to the test pressure divided by 100.

Resultant Thrust at Fittings at 100 psi Water Pressure

Total Pounds					
Nom. Pipe Dia. (in.)	Dead End	90° Bend	45° Bend	22½° Bend	11¼° Bend
3	1,232	1,742	943	481	241
4	1,810	2,559	1,385	706	355
6	3,739	5,288	2,862	1,459	733
8	6,433	9,097	4,923	2,510	1,261
10	9,677	13,685	7,406	3,776	1,897
12	13,685	19,353	10,474	5,340	2,683
14	18,385	26,001	14,072	7,174	3,604
16	23,779	33,628	18,199	9,278	4,661
18	29,865	42,235	22,858	11,653	5,855
20	36,644	51,822	28,046	14,298	7,183
24	52,279	73,934	40,013	20,398	10,249
30	80,425	113,738	61,554	31,380	15,766
36	115,209	162,931	88,177	44,952	22,585
42	155,528	219,950	119,036	60,684	30,489
48	202,683	286,637	155,127	79,083	39,733

END OF SECTION

THIS PAGE INTENTIONALLY LEFT BLANK FOR DOUBLE SIDED PRINTING

SECTION 33_05_25

STEEL CASING PIPE

PART 1 GENERAL

1.1 SUMMARY

A. Section includes minimum requirements for manufacturing, furnishing and transporting Steel Casing Pipe at the locations shown on the Drawings

B. All listed iron and steel products used in this project must be produced in the United States. The term "iron and steel products" means the following products made primarily of iron or steel: lined or unlined pipes and fittings, manhole covers and other municipal castings, hydrants, tanks, flanges, pipe clamps and restraints, valves, structural steel, reinforced precast concrete, and construction materials. The deminimis and minor components waiver apply to this contract for minor components.

1.2 RELATED SECTIONS

A. Section 01_00_01 Basic Requirements

B. 33_05_07.13 Utility Directional Drilling

C. 33_05_07.33 Utility Boring & Jacking

D. The Contract Documents are a complete unit and complementary to each other. The individual Specification sections and other Contract Documents do not contain all cross references to "related work" or "related sections." It is the Contractor's responsibility to review the complete Contract Documents in order to properly scope, schedule and coordinate the work of any/all subcontractors, suppliers, and others on this project. Anything called out in one location of the Contract Documents is binding as if it were called out in all sections of the Contract Documents.

1.3 SUBMITTALS

A. Submittals for products and miscellaneous items in this specification section shall be submitted in accordance with Section 01_33_01 General Submittal Requirements and related submittal sections and provisions of the Contract Documents.

1.4 REFERENCES

A. The Contractor and/or Manufacturer shall follow the standards listed below, except as otherwise specified herein. The latest revision or edition in effect at the time of bid opening shall be utilized.

B. ASTM International (ASTM):
1. A139, Standard Specification for Electric-Fusion (Arc)-Welded Steel Pipe (NPS Sizes 4 and Over).

C. American Water Works Association (AWWA):
   1. C203, Coal-Tar Protective Coatings and Linings for Steel Water Pipelines - Enamel and Tape - Hot Applied.

D. Occupational Safety and Health Administration (OSHA)
   1. OSHA Regulations and Standards for Underground Construction, 29 CFR Part 1926, Subpart S, Underground Construction and Subpart P, Excavation.

PART 2 PRODUCTS

2.1 EQUIPMENT, PRODUCT TYPES AND MATERIALS

A. Manufacturers
   1. The manufacturer must comply with this Specification and related Sections.

B. Design Criteria
   1. The Contractor is fully responsible for the design of Steel Casing Pipe that meets or exceeds the design requirements of this Specification and that is specifically designed for installation by the intended trenchless method.
   2. For Steel Casing Pipe utilized for tunneling projects, consider the following:
      a. Design of the casing pipe shall account for all installation and service loads including:
         1) Jacking loads
         2) External groundwater and earth loads
         3) Traffic loads
         4) Practical consideration for handling, shipping and other construction operations
         5) Any other live or dead loads reasonably anticipated
      b. Design shall be sealed and signed by a registered Professional Engineer licensed in the State of Oklahoma.
      c. The allowable jacking capacity shall not exceed 50 percent of the minimum steel yield stress.
   3. Steel Casing Pipe shall have a minimum wall thickness as follows:

Casing Diameter	Wall Thickness
<12”	0.25”
14” - 18”	0.3125”
19” - 22”	0.375”
23” - 28”	0.4375”
29” - 34”	0.50”
35” - 42”	0.5625”
43” - 48”	0.625”

   4. Wall thicknesses exceeding the table above may be used at the sole expense of the Contractor.
   5. Steel Casing Pipe shall be provided with inside diameter sufficient to efficiently install the required carrier pipe with casing spacers as required.
      a. Allowable casing diameters are shown on the Drawings for each crossing.

6. Furnish in lengths that are compatible with Contractor's shaft sizes and allowable work areas.
7. Random segments of pipe will not be permitted for straight runs of casing.
    a. Closing piece segments, however, shall be acceptable.
8. When required by installation method, provide grout/lubricant ports along the pipe at intervals of 10 feet or less.
    a. Ports and fittings shall be attached to the pipe in a manner that will not materially affect the strength of the pipe nor interfere with installation of carrier pipe.
    b. Plugs for sealing the fittings shall be provided by the Contractor and shall be capable of withstanding all external and internal pressures and loads without leaking.

C. Materials
1. Provide new, smooth-wall, carbon steel pipe conforming to ASTM A139, Grade B.
2. Dimensional Tolerances
    a. Furnishing and installing Steel Casing Pipe with dimensional tolerances that are compatible with performance requirements and proposed installation methods that meet or exceed the specific requirements below:
        1) Minimum wall thickness at any point shall be at least 87.5 percent of the nominal wall thickness.
        2) Outside circumference within 1.0 percent or 3/4 inch of the nominal circumference, whichever is less.
        3) Outside diameter of the pipe shall be within 1/8 inch of the nominal outside diameter.
        4) Roundness such that the difference between the major and minor outside diameters shall not exceed 0.5 percent of the specified nominal outside diameter or 1/4 inch, whichever is less.
        5) Maximum allowable straightness deviation of 1/8 inch in any 10-foot length.
3. All steel pipe shall have square ends.
    a. The ends of pipe sections shall not vary by more than 1/8 inch at any point from a true plane perpendicular to the axis of the pipe and passing through the center of the pipe at the end.
    b. When pipe ends have to be beveled for welding, the ends shall be beveled on the outside to an angle of 35 degrees with a tolerance of ± 2½ degrees and with a width of root face 1/16 inch ± 1/32 inch.
4. Steel Casing Pipe shall be fabricated with longitudinal weld seams.
    a. All girth weld seams shall be ground flush.

D. Finishes
1. Provide inside and outside of Steel Casing Pipe with a coal-tar protective coating in accordance with the requirements of AWWA C203.
    a. Touch up after field welds shall provide coating equal to those specified above.

PART 3 EXECUTION (NOT USED)

END OF SECTION

THIS PAGE INTENTIONALLY LEFT BLANK FOR DOUBLE SIDED PRINTING

SECTION 33_05_61

CONCRETE MANHOLES

PART 1 GENERAL

1.1 SCOPE OF WORK

A. Concrete manholes, frames and covers and appurtenances as shown on the Drawings and as specified. Manholes shall be constructed of precast concrete sections or cast-in-place concrete unless otherwise noted elsewhere. All manholes shall be watertight.

1.2 RELATED SECTIONS

A. Section 01_00_01 Basic Requirements

B. Section 01_33_01 General Submittal Requirements

C. Section 09_91_00.13 Painting of Treatment Plants

D. The Contract Documents are a complete unit and complementary to each other. The individual Specification sections and other Contract Documents do not contain all cross references to "related work" or "related sections." It is the Contractor's responsibility to review the complete Contract Documents in order to properly scope, schedule and coordinate the work of any/all subcontractors, suppliers, and others on this project. Anything called out in one location of the Contract Documents is binding as if it were called out in all sections of the Contract Documents.

1.3 SUBMITTALS

A. Section 01_33_01 – General Submittal Requirements: Procedures for submittals.

B. Shop Drawings: Indicate manhole locations, elevations, piping, sizes and elevations of penetrations.

C. Product Data: Provide manhole covers, component construction, features, configuration, and dimensions.

1.4 REFERENCE STANDARDS

A. American Association of State Highway Transportation Officials:
   1. AASHTO M306 - Standard Specification for Drainage, Sewer, Utility, and Related Castings.

B. American Society for Testing and Materials (ASTM)
   1. ASTM A48/A48M - Standard Specification for Gray Iron Castings.
   2. ASTM C76 – Standard Specifications for Reinforced Concrete Culvert, Storm Drain, and Sewer Pipe.
   3. ASTM C443 – Standard Specification for Joints for Concrete Pipe and Manholes, using Rubber Gaskets.

4. ASTM C478 – Standard Specification for Circular Precast Reinforced Concrete Manhole Sections.
5. ASTM C497 - Standard Test Methods for Concrete Pipe, Manhole Sections, or Tile.
6. ASTM C913 - Standard Specification for Precast Concrete Water and Wastewater Structures.
7. ASTM C923 – Standard Specifications for Resilient Connectors between Reinforced Concrete Manhole Structures, Pipes, and Laterals.
8. ASTM D2665 – Standard Specification for Poly (Vinyl Chloride) (PVC) Plastic Drain, Waste, and Vent Pipe and Fittings.

1.5 QUALITY ASSURANCE

A. The quality of materials, the process of manufacture, and the finished sections will be subject to inspection and approval by the Engineer. Such inspection may be made at the place of manufacture, or after delivery, or at both places. The materials shall be subject to rejection at any time on account of failure to meet any of the Specification requirements; even though samples may have been accepted as satisfactory at the place of manufacture. Material rejected after delivery to the job site shall be marked for identification and shall be removed from the job site at once. Materials which have been damaged after delivery will be rejected, and if already installed, shall be acceptably repaired, or removed and replaced, entirely at the Contractor's expense.

B. At the time of inspection, the materials will be carefully examined for compliance with the latest ASTM designations specified and these Specifications, and with the approved manufacturer's drawings. Manhole sections will be inspected for general appearance, dimension, blisters, cracks, roughness, soundness, etc. The surface shall be dense and close-textured.

C. Imperfections in manhole sections may be repaired, subject to the approval of the Engineer, after demonstration by the manufacturer that repairs will result in a strong manhole section. Repairs shall be carefully inspected before final approval. Cement mortar used for repairs shall give a minimum compressive strength of 4,000 psi at seven days and 5,000 psi at 28 days, when tested in three inch by six inch cylinders stored in the standard manner. Epoxy mortar may be utilized for repairs subject to the approval of the Engineer.

D. Manhole sections shall be subject to rejection on account of failure to conform to any of the requirements specified herein or having defects as follows.
   1. Variations in any dimensions exceeding the permissible variation allowed in ASTM C478.
   2. A piece broken out of the bell, spigot, tongue or groove in such size that the watertightness of the joint will be impaired.
   3. Any shattering or flaking of concrete or other conditions indicating an improper concrete mix.
   4. Cracks sufficient to impair the strength, durability, or serviceability of the pipe.
   5. Joint Sections with spalls, cracks, fractures, or other imperfections that will adversely affect the performance of the joints

1.6 DELIVERY, HANDLING AND STORAGE

A. Inspection: Accept materials on Site in manufacturer's original packaging and inspect for damage.

B. Handling: Comply with precast concrete manufacturer instructions and ASTM C913 for unloading and moving precast manholes and drainage structures.

C. Storage:
1. Store materials according to manufacturer instructions.
2. Store precast concrete manholes and drainage structures to prevent damage to Owner's property or other public or private property.
3. Repair property damaged from materials storage.

PART 2 PRODUCTS

2.1 PRECAST CONCRETE MANHOLE

A. MATERIALS: Manhole Sections: Reinforced precast in accordance with ASTM C478 with gasketsin accordance with ASTM C923.

B. COMPONENTS
1. Lid and Frame:
a. ASTM A48, Class 30B Cast iron construction, machined flat bearing surface,removable, watertight lid where shown.
b. Lid design; live load rating of 20,000 psi, sealing gasket, molded with "CITY OF [CITY] SANITARY SEWER", or "STORM SEWER" depending the application for the lid.
c. The ring and lid shall weigh a minimum of 350 pounds.
d. Manufacturer: East Jordan Iron Works, Inc., Model V-1420/1480 or Engineerapproved equal.
e. Manhole rings and covers where shown shall be watertight.
2. Base pads shall be precast in accordance with ASTM C478.
3. Bituminous or non-shrink grout forming a watertight seal.
4. Resilient Connectors: A-Lock or Engineer approved equal in accordance with ASTM C-923.

C. CONFIGURATION
1. Shaft Construction:
a. See drawings.
b. Joints shall be sealed with compression seal.
c. Seal shall be Forsheda No. 114 or Engineer approved equal.
2. Shape: Cylindrical.
3. Clear Inside Dimensions:
a. Minimum inside diameter of 48 inches for standard manhole sections.
b. For manhole section other than standard, the minimum inside diameter shall beas indicated on the Drawings.
4. Design Depth: As indicated.
5. Clear Lid Opening: 30 inches in diameter or as indicated.
6. Pipe Entry: Provide openings as indicated or required.
7. Steps: Provide corrosion resistant manhole steps meeting ASTM C478 Sec 11
8. Pipe Connections: Resilient connections cast into the wall of the precast base.
9. Manhole Inverts:
a. Grout inverts after pipes are in place.
b. Bench sides as required.

c. Slope for drainage.

2.2 CAST-IN-PLACE MANHOLES

A. Cast-in-place concrete manholes shall conform to the drawings. The concrete strength shall be 4,000 psi at 28-days for the construction of the base, walls, cone and top slab. The concrete shall be in accordance with Division 03. The concrete shall be vibrated to assure a monolithic structure free from infiltration.

PART 3 EXECUTION

3.1 EXAMINATION

A. Verify items provided by other sections of Work are properly sized and located.

B. Verify that built-in items are in proper location, and ready for roughing into Work.

C. Verify elevations of adjacent sewermains

D. Verify excavation for manholes is correct.

3.2 PLACEMENT

A. Manhole shall be constructed to the dimensions shown on the Drawings and as specified. Work shall be protected against flooding and floatation.

B. Excavate to a uniform depth to permit the installation of a minimum of 12 inches of #57 rock material for base pad subgrade.

C. Precast concrete barrel sections shall be set so as to be vertical and with sections in true alignment with a ¼-inch maximum tolerance to be allowed. Joints of precast barrel sections shall be sealed with a rubber "O" ring set in a recess. Lift holes for handling barrel sections shall be filled with non-shrink grout and finished flush with the adjoining surfaces. Allow grout to set for 24 hours before backfilling. Backfilling shall be performed in a careful manner, bringing the fill up evenly on all sides. The Contractor shall install the precast sections in a manner that will result in a watertight joint.

D. Unless otherwise shown on the Drawings, manhole foundations shall consist of a reinforced concrete slab, 12-inch thick minimum, with #5 bars at 12-inch centers each way top and bottom. The foundation shall be a minimum of one foot larger than the outside diameter of the manhole.

E. Adjust elevation of gravel material as required to attain proper grade and alignment of the basesection.

F. Place base pad, set top surface level. Place manhole in accordance with manufacturer's recommendations.

G. Grout precast manhole section into base interior and apply mastic sealer exterior.

H. Place manhole sections plumb and level, trim to correct elevations, anchor to base pad.

I. Cutouts in the bottom sections shall be appropriate for the pipe being laid and shall have identifyingmarkings to facilitate their being used in the correct locations.

J. The connecting pipe for concrete manhole installation with resilient connectors shall be plain end,square cut, spigots, which shall not protrude more than one inch inside the manhole.

K. Stubs for future connections shall be provided at locations shown. Stubs shall be a minimum ofone pipe joint long (13 feet) and terminate in a bell with a plug at the distal end.

L. Grout base of shaft sections to achieve slope to exit piping. Trowel smooth. Contour as required.

M. Set cover frames and covers level without tipping, to correct elevations.

N. Coordinate with other sections of work to provide correct size, shape, and location.

O. Manhole height shall be adjusted by using variable height risers set at the lowest section belownatural grade.

P. Manholes constructed in advance of paving projects shall be constructed with the top of the concrete portion of the manhole 23-inches below the final finished grade. The ring and cover shall be placed on a built-up section of approved grade rings and sealers between rings and other materials.

3.3 INVERTS

A. The bottom of each manhole shall be provided with a "U" shaped channel that is a smooth continuation of the inlet and outlet pipes. In manholes with pipes of different sizes, the tops of thepipes shall be placed at the same elevation, unless otherwise shown on the drawings, and flow channels in the invert sloped on an even slope from pipe to pipe.

B. The surface of the concrete slab shaped to form the invert shall be sloped upward from the edge ofthe invert to the manhole wall.
   1. The upper half of any pipe extending inside the manhole shall be cut substantially flushwith the wall.
   2. Any rough edge shall be smoothed with mortar.

C. Mortar used in manholes shall be mixed in the proportions by volume of 1 part cement to 4 partssand. Mortar shall have a workable consistency, but shall be as dry as feasible.

D. The centerline projection of all pipes shall pass through the centerline of the manhole.

3.4 CONNECTION TO EXISTING MANHOLES:

A. Connection to existing manholes shall not be made until all downstream manholes and sewer lineshave been completed, cleaned, tested, and inspected in accordance with the specification. The Engineer must grant approval prior to connection to existing manholes.

B. Connections to existing manholes shall be made by cutting a hole in the wall of the existing manhole, shaping the bottom of the manhole to fit the invert of the connections, inserting a length of sewer pipe through the opening and filling around the pipe with cement mortar and troweling thecement mortar inside and outside the manhole to a neat finish.
   1. When necessary to satisfactorily perform the work, the flow of sewage shall be blocked ata time of minimum flow.
   2. If necessary to prevent flow back up in the line to the extent that the damage would occur, the Contractor shall maintain the flow level with a trench pump section inserted in the line or in the next upstream manhole.
   3. Discharge shall be made into an appropriate manhole downstream of the construction.
   4. Connections to manholes, mains, and house services shall be made in a thoroughly workmanlike manner to the satisfaction of the Engineer.
   5. All bypass pumping shall be considered subsidiary to the construction of the connectionand shall be provided by the Contractor at no additional expense to the Owner.

3.5 CONNECTION TO EXISTING GRAVITY SEWER MAINS:

A. Connection to existing gravity sewer mains shall not be made until all downstream manhole andsewer lines have been completed, cleaned, tested, and inspected in accordance with the specifications. The Engineer must grant approval prior to connection to existing gravity sewer mains.

B. Contractor shall carefully excavate around existing gravity sewer main and construct manhole base so as not to disrupt service of existing main. Contractor shall take all precautions and actions necessary to protect existing main.

C. Connections to existing main shall be made by excavating around the main constructing themanhole to fit the existing main and the proposed effluent line.
   1. Once the manhole has been properly constructed, cut the existing main, plug the existingmain effluent and direct the flow through the new main.
   2. When necessary to satisfactorily perform the work, the flow of sewage shall be blocked ata time of minimum flow.
   3. If necessary to prevent flow backup in the line to the extent that damage would occur, theContractor shall maintain the flow level with a trench pump inserted in the line or the upstream manhole.
   4. Discharge shall be made into an appropriate manhole downstream of construction.
   5. All bypass pumping shall be considered subsidiary to the construction of connection to existing sewer mains and shall be provided by the Contractor at no additional expense tothe Owner.

3.6 MANHOLES TO BE ABANDONED:

A. Manholes indicated on the Drawings to be abandoned shall be abandoned in accordance withthese specifications and the details of the drawings.

B. Manholes shall not be abandoned until the new interceptor has been completed, tested, inspectedand approved by the Engineer.

C. The Contractor shall plug existing influent and effluent mains, fill lower section to 3’ below natural ground with sand, then backfill the remainder of the manhole with accepted trench backfill material.
   1. Backfill material shall be placed in 8" lifts and compacted to 90% standard proctor or 95%standard proctor when in a pavement section.
   2. The manhole cone and riser shall be removed to an elevation of 3' below natural groundand then properly disposed of off-site.

3.7 MANHOLE ACCESS:

A. Entrance into manholes in excess of four feet deep shall be accomplished by means of a portableladder.

B. Contractor shall provide such ladder as necessary during construction.

C. Comply with appropriate OSHA requirements.

3.8 TESTING

A. Manholes shall be tested for leakage by hydrostatic exfiltration testing or vacuum testing. Manholes shall be tested after installation with all connections in place.

B. Hydrostatic Testing. The maximum leakage for hydrostatic testing shall be 0.025 gallons per foot diameter per foot of manhole depth per hour. For concrete manholes a wetting period of 24 hours may be used prior to testing in order to allow saturation of the concrete. If the manhole fails the hydrostatic test, the manhole shall be repaired and retested until it passes the test.

C. Vacuum Testing. All lift holes and exterior joints shall be plugged with a non-shrink grout. No grout shall be placed in horizontal joints prior to testing. All pipes entering the manhole shall be plugged. Stubouts, manhole boots, and pipe plugs shall be secured to prevent movement while the vacuum is drawn. A minimum 60-inch-lb torque wrench shall be used to tighten the external clamps that secure the test cover to the top of the manhole. The test head shall be placed at the inside of the top of the cone section, and the seal inflated in accordance with the manufacturer’s recommendations. A vacuum of 10 inches of mercury shall be drawn, and the vacuum pump shut off. With all valves closed, the time for the vacuum to drop to 9 inches of mercury shall not be less than 2 minutes. If vacuum tests are used In lieu of hydrostatic tests, the test shall be done both before and after backfilling of the manhole has occurred. If the manhole fails a test, necessary repairs shall be made with a non-shrink grout while the vacuum is being drawn. The test shall be repeated. If the vacuum test is failed twice, the manhole shall be repaired, and a hydrostatic test shall be performed in accordance with paragraph

3.9 CLEANING

A. All new manholes shall be thoroughly cleaned of silt, debris and foreign matter of any kind, prior to final inspection.

END OF SECTION

THIS PAGE INTENTIONALLY LEFT BLANK FOR DOUBLE SIDED PRINTING

SECTION 33_05_64

PRECAST REINFORCED CONCRETE VAULT

PART 1 GENERAL

1.1 SUMMARY

A. Precast Reinforced Concrete Vault as required by this section of the Contract Documents, and/or other appropriate sections of Contract Documents.

1.2 RELATED SECTIONS

A. Section 01_00_01 Basic Requirements

B. Section 01_33_01 General Submittal Requirements

C. Section 31_00_00 Earthwork

D. Section 31_23_24 Utility Earthwork

E. The Contract Documents are a complete unit and complementary to each other. The individual Specification sections and other Contract Documents do not contain all cross references to "related work" or "related sections." It is the Contractor's responsibility to review the complete Contract Documents in order to properly scope, schedule and coordinate the work of any/all subcontractors, suppliers, and others on this project. Anything called out in one location of the Contract Documents is binding as if it were called out in all sections of the Contract Documents.

1.3 SUBMITTALS

A. Submittals for products and miscellaneous items in this specification section shall be submitted in accordance with Section 01_33_01 General Submittal Requirements and related submittal sections and provisions of the Contract Documents.

B. Manufacturer's Project Data Sheets
1. Manufacturer's product data sheets.
2. Shop drawings of manhole sections, base units and construction details, jointing methods, manhole penetration locations, materials, and dimensions.
3. Summary of criteria used in manhole design including, as minimum, material properties, loadings, load combinations, and dimensions assumed.
4. Manufacturer's certification of compliance with ASTM Standards
5. Frames, hatches, grade, rings and covers.
6. Materials to be used in fabricating drop connections.
7. Materials to be used for pipe connections at manhole walls.
8. Materials to be used for stubs and stub plugs, if required.
9. Materials to be used for lift hole seals.
10. Concrete mix and test results.
11. Signed and sealed drawings by an Oklahoma registered Structural Engineer (SE).

1.4 REFERENCES

A. The Contractor and/or Manufacturer shall follow the standards listed below, except as otherwise specified herein. The latest revision or edition in effect at the time of bid opening shall be utilized.

1.5 QUALITY ASSURANCE

A. Furnish all labor, materials, equipment, incidentals and transportation necessary for placing precast reinforced concrete vault.

1.6 QUALITY ASSURANCE

A. Design Criteria:
   1. Precast reinforced concrete vault shall conform:
      a. To the requirements of ASTM C857 and C858 for underground precast concrete utility structures.
      b. AASHTO LRFD HL-93 design live loading applied to manhole cover and transition and base slabs.
      c. Dead load of manhole sections fully supported by transition and base slabs.
      d. Be designed for the specific site conditions and construction document requirements.
      e. Be designed to resist buoyant forces due saturated soil.
   2. Wall and slab minimum thicknesses shall be as calculated to resist design forces, but shall not be less than that required for: manufacture and handling; proper embedment of access hatch; proper installation of pipe penetration seal.

B. Test Requirements:
   1. For testing of precast (machine-made) vaults, a minimum of four test cylinders for design compressive strength shall be made for each day's production run of each size and class of culvert section. Strength tests for each production run will be based on the average strength of two cylinders which may be tested any time after completion of the specified curing period. When design strength is attained on the initial test, further tests on that run will not be required. Should the initial test fail to meet the design strength, subsequent tests shall be made at 28 days unless additional test cylinders were made during production of that run. Failure to attain design compression strength by the 28-day test will result in rejection of the run represented by the test. Equipment required for testing for precast (machine-made) vaults shall be furnished by the fabricator. Cylinders for compressive strength tests shall be made in accordance with ASTM C31.

C. Permissible Variations:
   1. Tolerances for precast sections shall conform to ASTM C858.
      a. Deviations from the above tolerances will be acceptable if the sections can be fitted at the plant or job site and it is determined that an acceptable joint can be made. For this condition an acceptable joint is:
         1) When two sections are fitted together on a flat surface, in proper alignment and in the position they will be installed, the longitudinal opening at any point shall not exceed 1 inch. Sections fitted together at the plant and accepted in this manner shall be match-marked for installation.

D. Inspection:
1. The quality of materials, the process of manufacture, and the finished vault shall be subject to inspection and approval by the Owner or an authorized representative at themanufacturing plant. In addition, the vault shall be subject to further inspection by theOwner at the Project Site prior to and during installation.

E. Cause for Rejection:
1. The vault shall be subject to rejection on account of failure to conform to any of the specification requirements. Individual sections of vault may be rejected because of thefollowing:
a. Fractures or cracks in the vault.
b. Defects that indicate imperfect proportioning, mixing and molding.
c. Surface defects indicating honeycombed or open texture.
d. Damaged ends, where such damage would prevent making a structurally sound andwater tight joint.

PART 2 PRODUCTS

2.1 MIXES

A. Concrete: Mixed in a central batch plant or other approved batching facility from which the quality and uniformity of the concrete can be assured. Transit mixed concrete will not be acceptable. Concrete shall be 5000 psi minimum.

2.2 MANUFACTURED PRODUCTS

A. Vault: Materials, manufacture and curing of precast reinforced concrete vault shall conform to ASTM Standards. Vault shall be a precast concrete structure in accordance with the Drawings and Specifications, and shall be manufactured by Oldcastle Precast, 1100 HeritagePkwy, Mansfield, TX 76063-2759, or approved equal.

B. Use various lengths of manhole sections in combination to provide correct height with the fewest joints.

C. Cold Applied Preformed Gaskets:
1. Cold applied preformed gaskets shall be suitable for sealing joints of tongue and groove concrete box sections. The gasket sealing the joint shall be produced from blends of refined hydrocarbon resins and plasticizing compounds reinforced with inert mineral filler and shall contain no solvents, irritating fumes or obnoxious odors. The gasket joint sealer shall not depend on oxidizing, evaporating, or chemical action for its adhesive or cohesive strength, and shall be supplied in extruded rope-form of suitable cross-section. The size of the gasket joint sealer shall be in accordance with the manufacturer's recommendations and sufficient to obtain the squeeze-out as described in Paragraph 3.02.
2. Gasket joint sealer shall be protected by a suitable removable two-piece wrapper. The two-piece wrapper shall be so designed that half may be removed longitudinally without disturbing the other half to facilitate application as noted below.
3. The chemical composition of the gasket joint sealing compound shall conform to therequirements of AASHTO M198-08 1, Type B, Flexible Plastic Gasket (Bitumen).

D. Workmanship and Finish: Vault shall be substantially free from fractures, large or deep cracks and surface roughness. The ends of the vault shall be normal to the walls and centerline of the vault within the limits of Permissible Variations specified above. The vault exterior shall be coated with a bituminous coating for areas to be install below grade.

E. Markings: The following information shall be clearly marked on each section. Markingsshall be indented on the vault or painted thereon with waterproof paint.
1. The load rating and ASTM Designation No. of the vault.
2. The date of manufacture.
3. The name or trade name of the manufacturer.

PART 3 EXECUTION

3.1 EXCAVATION AND EMBEDMENT

A. Excavation and embedment shall conform to the requirements in Section 31_00_00 Earthwork, Section 31_23_24 Utility Earthwork & Backfill & Notes/Details on the Drawings.

3.2 INSTALLATION

A. Laying:
1. Vault sections shall be installed such that the bottom section(s) shall be full sections. Partial sections, if necessary, shall be utilized for the top most section only. Vault covershall be separate from the vault walls.

B. Jointing:
1. Joints using cold applied preformed plastic gaskets shall be made as follows:
   a. A suitable primer of the type recommended by the manufacturer of the gasket joint sealer shall be brush- applied to the tongue and groove joint surfaces and the end surfaces and allowed to dry and harden. No primer shall be applied over mud, sand,dirt or sharp cement protrusions. Clean and dry the surface to the primed when primer is applied.
   b. Before laying the vault in the trench, attach the plastic gasket sealer around the tapered tongue or tapered groove near the shoulder or hub of each joint. Remove the paper wrapper from one side only of the two-piece wrapper on the gasket and press firmly to the clean, dry vault joint surface. Do no remove the outside wrapper until immediately before pushing the vault into its final position.
   c. When the tongue is correctly aligned with the flare of the groove, remove the outside wrapper on the gasket and pull or push home the vault with sufficient forceand power (Back Hoe shovel, chain hoist, ratchet hoist or winch) to cause the evidence of squeeze-out of the gasket material on the side of outside around the complex vault joint perimeter.
   d. When the atmospheric temperature is below 60 F, plastic joint seal gaskets shall either be stored in an area warmed to above 70 F, or artificially warmed to this temperature in a manner satisfactory to the Engineer. Apply gaskets to vault jointsimmediately prior to placing vault in trench, followed by connection to previously laid box section.

3.3 BACKFILL

A. After the vault has been placed, bedded and jointed as specified and approved by the Owner or his authorized representative, perform backfilling in accordance Specifications.

END OF SECTION

THIS PAGE INTENTIONALLY LEFT BLANK FOR DOUBLE SIDED PRINTING

SECTION 33_05_97.23

UNDERGROUND UTILITY WARNING TAPE

PART 1 GENERAL

1.1 SCOPE OF WORK

A. Buried tape for utility marker as detailed on the Drawings.
   1. Provide detectable warning tape for all non-metallic pipelines
   2. Provide non-detectable warning tape for all metallic pipelines.

B. Install buried tape for utility marker as described herein to be used for locating pipe. Buried tape shall be installed on all water mains and services, all wastewater lines and sewer mains and all wastewater force mains whether or not specifically detailed in the Drawings.

C. There is no separate payment for the supply and installation of underground utility warning tape and it shall be considered subsidiary to the item for which they pertain.

D. Surface markers are not outlined on the drawings but should be installed in all located as indicated in this section.

1.2 REFERENCE STANDARDS

A. American Public Works Association (APWA):
   1. Uniform Color Code

PART 2 PRODUCTS

2.1 MATERIALS

A. Materials
   1. Detectable Buried Markers
      a. Provide detectable warning tape as follows:
         1) 5.0 mil overall thickness
         2) Width – 3 inch minimum
         3) Weight – 27.5 pounds per inch per 1,000 square feet
         4) Triple Layer with:
            a) Minimum thickness 0.35 mils solid aluminum foil encased in aprotective inert plastic jacket
               (1) 100 percent virgin low density polyethylene
               (2) Impervious to all known alkalis, acids, chemical reagents andsolvents within soil
               (3) Aluminum foil visible to both sides
         5) Locatable by conductive and inductive methods
         6) Printing encased to avoid ink rub-off
         7) Color and Legends
            a) Potable water lines

(1) Color – Blue (in accordance with APWA Uniform Color Code)
(2) Legend – Caution Potable Water Line Below (repeated every 24inches)

b) Raw water lines / sewer lines
(1) Color – Green (in accordance with APWA Uniform Color Code)
(2) Legend – Caution Raw Water Line Below (repeated every 24inches)

2. Non-Detectable Buried Markers
a. Provide non-detectable warning tape as follows:
1) 4.0 mil overall thickness
2) Width – 3 inch minimum
3) Weight – 20 pounds per inch per 1,000 square feet
4) 100 percent virgin low density polyethylene
5) Impervious to all known alkalis, acids, chemical reagents and solventswithin soil
6) Printing encased to avoid ink rub-off
7) Color and Legends
a) Potable water lines
(1) Color – Blue (in accordance with APWA Uniform Color Code)
(2) Legend – Caution Potable Water Line Below (repeated every 24inches)
b) Raw water lines / sewer lines
(1) Color – Green (in accordance with APWA Uniform Color Code)
(2) Legend – Caution Raw Water Line Below (repeated every 24inches)

PART 3 EXECUTION

A. Buried Markers (Warning Tape)
1. Provide detectable warning tape for all non-metallic pipelines.
2. Provide non-detectable warning tape for all metallic pipelines.
3. Install in accordance with manufacturer's recommendations below natural ground surface and directly above the utility for which it is marking.
a. Allow 18 inches minimum between utility and marker.
b. Bury to a depth of 3 feet or as close to the grade as is practical for optimum protection and detectability.

END OF SECTION

SECTION 40_05_00.13

PIPING SYSTEMS TESTING

PART 1 GENERAL

1.1 SUMMARY

A. Provide all necessary labor, materials and equipment, including test pumps and gauges, as well as temporary valves, flanges, piping, etc to perform the testing operations of piping systems as specified herein.

B. All pressure pipe installations shall be hydrostatically tested at 1.5 working pressure or 150 psi, whichever is greater.

C. All gravity pipe installations shall be tested by low pressure air and mandrel (where applicable as specified herein.)

D. All testing shall be done in the presence of, and approved by, the engineer / engineer's representative. Notify engineer five (5) days in advance of testing.

E. If demonstrated workmanship on one or more tests show that lines are sufficiently watertight, the Engineer may waive remaining testing on any given type or section of line.

F. Contractor's Responsibility:
1. Take such precautions as required to prevent damage to lines and appurtenances being tested.
2. Repair any damage resulting from tests.
3. Repair and retest all items which do not pass the tests as specified herein.
4. Conduct all tests in the presence of the Engineer, and to the satisfaction of the Engineer and all State and local authorities having jurisdiction.
5. All necessary pumps, water, pipe connections, meters, gauges, and any necessary apparatus to perform and conduct the tests shall be furnished by the Contractor. Contractor shall furnish all necessary equipment and make all tests at Contractor's expense without separate measurement and payment, but said expense shall be subsidiary to installation of pipe.

G. Water used for testing purposes shall be potable and/or non-potable water. Raw untreated wastewater (sewage) will not be allowed.

H. For HDPE Pipe, see Section 40_04_33.

1.2 RELATED SECTIONS

A. Section 01_00_01 Basic Requirements

B. Section 01_33_01 General Submittal Requirements

C. The Contract Documents are a complete unit and complementary to each other. The individual Specification sections and other Contract Documents do not contain all cross

references to "related work" or "related sections." It is the Contractor's responsibility to review the complete Contract Documents in order to properly scope, schedule and coordinate the work of any/all subcontractors, suppliers, and others on this project. Anything called out in one location of the Contract Documents is binding as if it were called out in all sections of the Contract Documents.

1.3 SUBMITTALS

A. Submittals for products and miscellaneous items in this specification section shall be submitted in accordance with Section 01_33_01 General Submittal Requirements and related submittal sections and provisions of the Contract Documents.

B. Submit record data describing proposed testing methods, procedures, and apparatus for Engineer's record, prior to testing.

C. Conform to any other applicable requirements of Section 01_33_00 – Submittal Procedures.

D. Submit a certified test report for each test to Engineer certifying the location of the joint or section tested, the test pressures at the start and end of each test, duration of the test, leakage and pertinent observations and comments.

1.4 SEQUENCE

A. Clean piping before pressure or leak tests.

B. Test gravity piping underground, including sanitary sewers, for visible leaks before backfilling and compacting.

C. Backfill and compact trench, or provide blocking that prevents pipe movement before testing underground piping with a maximum leakage allowance.

D. Test underground piping before encasing piping in concrete or covering piping with slab, structure, or permanent improvement.

PART 2 PRODUCTS (NOT USED)

PART 3 EXECUTION

3.1 TESTING OF DRAINS, GRAVITY WASTEWATER, AND OTHER GRAVITY LINES

A. General:
   1. General:
   2. For all pipe, the method of testing shall be either an exfiltration test or a low-pressure air joint test. For any flexible, non-metallic or non-concrete pipe, such as plastic or fiber reinforced plastic pipe or similar flexible pipe materials, a deflection test shall be performed in addition to an exfiltration test.
   3. Do not perform any test until backfill has been completed to within 1' of proposed final grade.

4. Make first test promptly after first joint or section of line is laid and backfilled (as applicable). A section of pipe will normally be a run between two manholes, or between structures.
5. Settlement in backfill during exfiltration tests will be taken as an indication of leakage.

B. Low Pressure Air Joint Test:
1. All finished installations for non-pressure applications shall be tested via low-pressure air testing in accordance with ASTM F1417 and the specifications herein.
2. Isolate the section of non-pressure sewer line to be air tested by inflatable stoppers or other suitable test plugs/caps.
3. Ends of all branches, laterals, tees, wyes, and/or stubs in the test section shall be plugged or capped to prevent air leakage. One of the plugs/caps shall have an inlet tap or other method for connecting the air hose to an air control source.
4. Test ends should be restrained and/or braced during air testing.
5. Add air slowly to the test section until the pressure reaches 4.0 psi. After the test pressure is obtained, regulate the air supply so that the pressure is maintained between 3.5 and 4.0 psi for at least 2 minutes until the air temperature stabilizes and is in equilibrium with the temperature of the pipe walls.
6. Disconnect the air supply and decrease the pressure to 3.5 psi before starting the test.
7. Determine the rate of air pressure loss from 3.5 psi to 2.5 psi.
8. If the rate of air loss is greater than or equal to the table below (from ASTM F1417), the installation is acceptable:

Pipe Diameter, in.	Minimum Time, min:s	Length for Minimum Time, ft	Time for Longer Length, s
4	3:46	597	0.380 L
6	5:40	398	0.854 L
8	7:34	298	1.520 L
10	9:26	239	2.374 L
12	11:20	199	3.418 L
15	14:10	159	5.342 L
18	17:00	133	7.692 L
21	19:50	114	10.470 L
24	22:40	99	13.674 L
27	25:30:00	88	17.306 L
30	28:20:00	80	21.366 L
33	31:10:00	72	25.852 L
36	34:00:00	66	30.768 L
42	39:48:00	57	41.883 L
48	45:34:00	50	54.705 L
54	51:02:00	44	69.236 L
60	56:40:00	40	85.476 L

9. Upon completion of the test, open the bleeder valve and allow all air to escape. Caps/plugs shall not be removed until all air pressure in the test section has been reduced to atmospheric pressure.

C. Deflection Test

1. For all flexible and/or semi-rigid non-metallic, non-concrete pipe such as CCFRP, PE, FRP, PVC, etc., a deflection test shall be performed in addition to any other required leakage tests.
2. No pipe shall be accepted unless the Mandrel passes through verifying that the deflection is less than 5 percent of the internal diameter.
3. Two deflection tests using a mandrel will be required for each pipe segment after installation. The first deflection test shall be performed after the pipe has been completely installed and backfilled where a mandrel shall be pulled through the entire line segment to determine whether the maximum allowable percent of deflection has been exceeded. A second test shall be performed following a minimum of three (3) months after installation and backfill for any section by pulling a mandrel through the entire line to determine whether the maximum allowable deflection percent has been exceeded.
4. The diameter of the mandrel shall be the maximum allowable percent deflection specified less than the inside diameter of the sewer line. The maximum allowable percent deflection shall be based on the nominal diameter. All mandrels and measurements shall be based on the nominal diameter [i.e., 42-inch nominal pipe diameter with a maximum 5 percent deflection requirement will have a maximum allowable 5 percent deflection of 2.1 inches (0.05 x 42 = 2.1); a mandrel outside diameter (minimum) of 39.9 inches (42 -2.1 = 39.9)].
5. In cases where the mandrel may hang due to excess deflection, the pipe shall be uncovered at this point and the conditions shall be corrected. Correction may be by reworking of the embedment and backfill, or by replacing that section of the pipe. This portion of the pipe shall again be backfilled, and the mandrel pulled through again, and this process repeated until the pipe is clear of all obstructions. The test shall be performed without mechanical pulling devices.

3.2 TESTING OF PRESSURE LINES

A. General:

1. The Contractor shall perform a hydrostatic test in accordance with AWWA C600, for ductile iron pipe, and C605, for PVC pipe.
2. For ductile iron pipe conforming to AWWA C150 and C151 the test pressure shall not be less than 1.25 times the working pressure at the highest elevation along the test section and not less than 1.5 times the working pressure at the lowest elevation of the test section. Test pressure shall not exceed thrust restraint design pressures or 1.5 times the pressure rating of the pipe or joint, whichever is less.
3. For PVC pipe conforming to AWWA C900, C905 and C909 the test pressure shall not be less that 1.25 times the working pressure at the highest elevation along the test section unless the pressure exceeds the design pressure limit for any pipe, thrust restraint, valve, fitting or other appurtenance of the test section. Test pressure shall not exceed the design pressure limit for any pipe, thrust restraint, valve, fitting or other appurtenance of the test section.
4. Allow concrete blocking to cure for at least 7 days before testing.
5. Backfill and compact soil behind all blocking.
6. Remove any pressure sensitive equipment which may be damaged by pressure.
7. Backfill over pipe to extent necessary to restrain the piping. Backfill shall extend to within 1-foot of proposed final grade.
8. Contractor may perform informal leak test prior to backfill, but final acceptance shall not be performed until backfill is completed.

9. New Piping Connected to Existing Piping
    a. Isolate new piping with grooved-end pipe caps, blind flanges or other means acceptable to engineer. At no time may pressure testing be completed against a closed valve.
10. Conduct water leakage test after completing hydrostatic pressure tests.
11. Lines which fail to hold the specified test pressure for at least two hours or which exceed an allowable leakage rate specified below, shall be repaired and retested at the Contractor's expense.
12. If changes are made to piping installation after initial testing, such as addition of valves, routing changes, branches, etc., the entire line must be retested.
13. Testing against valves will not be permitted. All sections of pipe to be tested must be blind-flanged.

B. Test Restrictions
1. Test pressure shall be a minimum of 100 psi (regardless of working pressure)
2. Test pressure shall not exceed pipe or thrust-restraint design pressures.
3. The hydrostatic test shall be of at least a 2-hour duration.
4. Test pressure shall not vary by more than ± 5 psi (34.5 kPa) for the duration of the test.
5. Prevent contamination of the Owner's water distribution system.
6. After pipelines or isolated sections of pipelines have been filled with water, increase the pressure to test pressure by means of a pump
7. Open interior valves, including fire hydrants and other appurtenances, during tests.
8. After the specified test pressure has been applied, the entire pipeline shall be checked in the presence of the Engineer giving particular attention to parts of the pipeline and the appurtenances that are exposed.
9. If leaks are apparent, perform corrective work and replace material that is required to remedy the defect and stop the leaks at no extra cost to the Owner.
10. If no leaks were apparent or after corrective work has been completed, the pipelines shall be subjected to a leakage test at the pressure specified with a meter inserted in the test pump discharge line.
11. Corrective work shall be approved by the Engineer.

C. Procedures for Leakage and Hydrostatic Pressure Tests:
1. Slowly fill isolated section of line with water. The pipe shall be filled slowly from the lowest point on the line. Flow velocity during line filling should not exceed 0.25 ft/s.
2. Ensure that all air has been expelled through air and vacuum release valves, taps, or connections shown on Drawings for permanent piping, valves, or accessories. Do not make additional taps solely for air expulsion purposes unless approved by Engineer. No additional compensation will be made for additional taps.
3. Apply specified test pressure based on the elevation of the lowest section of line under test and corrected to elevation of test gauge. Duration of test shall be two hours.
4. Allow concrete pipe to stand full of water at least 12 hours before starting leakage test.
5. At the end of the two hours of the test, the entire route of the pipeline shall be inspected to locate any leaks or breaks. Any defective joints, cracked or defective pipe, fittings, or valves discovered in consequence of this pressure test shall be removed and replaced with sound material in the manner provided and the test shall be repeated until satisfactory results are obtained. Any and all noticeable

leaks shall be repaired regardless of whether the actual leakage is within the allowable range. The pipe shall be retested over a period of two hours.

6. All pipe shall be tested for leakage by a hydrostatic pressure test. Lines shall be filled slowly, with a maximum velocity of 1-foot per second, while venting all air. If permanent air vents have not been installed, the Contractor shall install corporation cocks at all high points to expel air during initial filling and testing of the lines.
7. The duration of each leakage test shall be two hours unless otherwise specified, and during the test the line shall be subjected to a continuous test specified pressure at the lowest elevation.
8. Leakage is defined as the net quantity of water that must be supplied into the newly laid pipe, or any valved section thereof, necessary to maintain pressure within 5 psi of the specified leakage test pressure after the pipe has been filled with water and the air in the pipeline has been expelled. No installation shall be accepted if the leakage is greater than that determined by the following formula:

$$L = \frac{SD(P)^{0.5}}{133{,}200}$$

Where L = allowable leakage, in gallons per hour S = length of pipeline tested in feet
D = nominal diameter of the pipe, inches
P = average test pressure during the leakage test, psig

9. The test pressure shall be applied by means of a pump connected to the pipe and to an approved water container, or other approved method, for accurate measurement. The test pressure shall be maintained (by additional pumping, if necessary) for the specified time. While the line is under pressure, the system and all exposed pipe, fittings, valves, and hydrants shall be carefully examined for leakage. All defective elements shall be repaired or replaced and the test repeated until all visible leakage has been stopped and the allowable leakage requirements have been met.
10. On completion of tests, any newly installed, approved taps shall be tightly plugged with brass fittings.
11. Thoroughly purge all compressed air lines after testing.

3.3 MANHOLE TESTING

A. Manholes shall be tested separately and independently of the wastewater lines. All wastewater lines coming into the manhole shall be sealed with an internal pipe plug before testing. All manholes shall be hydrostatically tested with a maximum loss allowance of 0.025 gallons per foot diameter per foot of head per hour. The testing period shall not be less than one hour. The manhole shall be filled to the top. For concrete manholes a wetting period of 24 hours should be used prior to testing in order to allow saturation of the concrete.

3.4 TESTING OF PROCESS AIR LINES

A. Line segments shall be tested after the final cleaning and inspection has occurred and prior to placing the piping segment into service. Contractor shall coordinate testing with the construction sequencing specification.

B. All process air lines shall be pressure tested at 15 PSI. Contractor shall close valve as necessary to maintain pressure in the section being tested. Contractor shall soap test all field welds and joints. Any visible bubbling of the soap indicates a leak in the weld or joint and shall be repaired prior to placing the piping segment into service. After repairs have been completed, the Owner or Engineer shall perform another visual inspection of the interior of the pipe segment prior to placing in service.

C. Acceptable leakage is 0 psi in 24 hours.

END OF SECTION

THIS PAGE INTENTIONALLY LEFT BLANK FOR DOUBLE SIDED PRINTING

SECTION 40_05_06.03

PIPE COUPLINGS

PART 1 GENERAL

1.1 SUMMARY

A. Pipe Couplings as required by this section of the Contract Documents, unless otherwise indicated specifically on individual plans and appropriate sections of Contract Documents.

B. All appurtenances may or may not be required on this project (see Drawings) and include:
1. Bolted, split-sleeve coupling.
2. Bolted, split-sleeve flange adapter coupling.
3. Dismantling joints.
4. Grooved joint couplings.
5. Flanged coupling adapters.
6. Flexible couplings.
7. Restrained flange coupling adapters.

C. All listed iron and steel products used in this project must be produced in the United States. The term "iron and steel products" means the following products made primarily of iron or steel: lined or unlined pipes and fittings, manhole covers and other municipal castings, hydrants, tanks, flanges, pipe clamps and restraints, valves, structural steel, reinforced precast concrete, and construction materials. The deminimis and minor components waiver apply to this contract for minor components.

1.2 RELATED SECTIONS

A. Section 01_00_01 Basic Requirements

B. Section 01_33_01 General Submittal Requirements

C. The Contract Documents are a complete unit and complementary to each other. The individual Specification sections and other Contract Documents do not contain all cross references to "related work" or "related sections." It is the Contractor's responsibility to review the complete Contract Documents in order to properly scope, schedule and coordinate the work of any/all subcontractors, suppliers, and others on this project. Anything called out in one location of the Contract Documents is binding as if it were called out in all sections of the Contract Documents.

1.3 SUBMITTALS

A. Submittals for products and miscellaneous items in this specification section shall be submitted in accordance with Section 01_33_01 General Submittal Requirements and related submittal sections and provisions of the Contract Documents.

1.4 REFERENCES

A. The Contractor and/or Manufacturer shall follow the standards listed below, except as otherwise specified herein. The latest revision or edition in effect at the time of bid opening shall be utilized.

B. American Society of Mechanical Engineers (ASME):
   1. B31.1 - Power Piping.
   2. B31.9 - Building Services Piping.

C. American Water Works Association (AWWA):
   1. C111 - Standard for Rubber-Gasket Joints for Ductile-Iron Pressure Pipe and Fittings.
   2. C207 - Standard for Steel Pipe Flanges for Waterworks Service - Sizes 4 In.Through 144 In.
   3. C606 - Standard for Grooved and Shouldered Joints.

D. ASTM International (ASTM):
   1. A 36 - Standard Specification for Carbon Structural Steel.
   2. A 53 - Standard Specification for Pipe, Steel, Black and Hot-Dipped, Zinc-Coated, Welded and Seamless.
   3. A 193 - Standard Specification for Alloy Steel and Stainless Steel Bolting Materials for High Temperature or High Pressure Service and Other Special Purpose Applications.
   4. A 240 - Standard Specification for Chromium and Chromium-Nickel StainlessSteel Plate, Sheet, and Strip for Pressure Vessels and for General Applications.
   5. A 325 - Standard Specification for Structural Bolts, Steel, Heat Treated,120/105 ksi Minimum Tensile Strength.
   6. A 351 - Standard Specification for Castings, Austenitic, for Pressure-Containing Parts.
   7. A 449 - Standard Specification for Hex Cap Screws, Bolts and Studs, Steel,Heat Treated, 120/105/9 ksi Minimum Tensile Strength, General Use.
   8. A 536 - Standard Specification for Ductile Iron Castings.
   9. A 563 - Standard Specification for Carbon and Alloy Steel Nuts.
   10. A 576 - Standard Specification for Steel Bars, Carbon, Hot-Wrought, SpecialQuality.
   11. F 593 - Standard Specification for Stainless Steel Bolts, Hex Cap Screws, andStuds.
   12. F 594 - Standard Specification for Stainless Steel Nuts.

E. NSF International (NSF).
   1. 61 - Drinking Water System Components - Health Effects.

PART 2 PRODUCTS

2.1 PIPE COUPLINGS FOR DUCTILE IRON PIPING

A. Dismantling joints:
   1. Manufacturers: One of the following or equal:
      a. Romac Industries, Inc., Style DJ400.
      b. Smith-Blair, Inc., Series 975.
   2. Materials:

a. Flanged spool:
   1) C207 Schedule 40 steel pipe in accordance with ASTM A 53 for sizes 3 inches to 12 inches.
   2) Steel for pipe in accordance with ASTM A 36 for sizes 14 inches to 72 inches.
b. End ring and body:
   1) For sizes 3 inches to 12 inches, ductile iron in accordance with ASTM A 536.
   2) For sizes 14 inches to 72 inches, steel in accordance withASTM A 36 or A 53.
c. Follower ring: Ductile iron in accordance with ASTM A 536 or steel in accordance with ASTM A 36 or A 576.
d. Bolts and hex nuts:
   1) Aboveground: High strength, low alloy steel in accordance with AWWA C111, xylan coated.
   2) Buried and underwater: Type 316 stainless steel bolts in accordancewith ASTM F 593.
e. Tie rods: High tensile steel in accordance with ASTM A 193 Grade B7.

3. Flange design: Class D steel ring flange in accordance with AWWA C207, compatible with ANSI Class 125 and 150 bolt circles.
4. Coating and lining: Manufacturer's standard fusion bonded epoxy, NSF 61certified.

B. Flanged coupling adapters: 12-inch size and smaller.
1. Manufacturers: One of the following or equal:
   a. Dresser, Inc., Style 227.
   b. Romac Industries, Inc., Style FCA501.
   c. Smith-Blair, Inc., Series 912.
2. Materials:
   a. Flanged body: Ductile iron in accordance with ASTM A 536.
   b. Follower ring: Ductile iron in accordance with ASTM A 536.
   c. Bolts and hex nuts:
      1) Aboveground: High strength, low alloy steel in accordance with AWWA C111, xylan coated.
      2) Buried and underwater: Type 316 stainless steel bolts in accordancewith ASTM F 593.
3. Flange design: Class D steel ring flange in accordance with AWWA C207compatible with ANSI Class 125 and 150 bolt circles.
4. Coating and lining: Manufacturer's standard fusion bonded epoxy, NSF 61certified.

C. Flanged coupling adapters: Greater than 12-inch size:
1. Manufacturers: One of the following or equal:
   a. Dresser, Inc., Style 128-W.
   b. Romac Industries, Inc., Style FC400.
   c. Smith-Blair, Inc., Series 913.
2. Materials:
   a. Flange and flanged body: Ductile iron or low carbon steel having a minimum yield strength of 30,000 pounds per square inch.
   b. Follower ring: Low carbon steel having a minimum yield strength of30,000 pounds per square inch.
   c. Bolts and hex nuts:

1) Aboveground: High strength, low alloy steel in accordance with AWWA C111, xylan coated.
2) Buried and underwater: Type 316 stainless steel bolts in accordancewith ASTM F 593.

3. Flange design: Class D steel ring flange in accordance with AWWA C207compatible with ANSI Class 125 and 150 bolt circles.
4. Coating and lining: Manufacturer's standard fusion bonded epoxy, NSF 61certified.

D. Flexible couplings:
1. Manufacturers: One of the following or equal:
   a. Dresser, Inc., Style 253.
   b. Romac Industries, Inc., Style 501.
   c. Smith-Blair, Inc., Series 441.
2. Materials:
   a. Center rings: Ductile iron in accordance with ASTM A 536.
   b. Follower rings: Ductile iron in accordance with ASTM A 536.
   c. Bolts and hex nuts:
      1) Aboveground: High strength, low alloy steel in accordance with AWWA C111, xylan coated.
      2) Buried and underwater: Type 316 stainless steel in accordance withASTM F 593.
3. Coating and lining: Manufacturer's standard fusion bonded epoxy, NSF 61certified.
4. Center sleeve dimensions: Provide center sleeves with lengths in accordancewith following table:

Nominal Pipe Size	Sleeve Length
3 inch and smaller	Manufacturer's standard
4 inch through 8 inch	7 inches
10 inch through 14 inch	12 inches
Greater than 16 inch	Use steel flexible coupling per Pipe Couplings for Steel Piping

E. Restrained flange coupling adapter:
1. Manufacturers: One of the following or equal:
   a. Romac Industries, Inc., Style RFCA.
   b. Star Pipe Products, 3200 StarFlange.
2. Materials:
   a. Flange and flanged body: Ductile iron in accordance with ASTM A 536.
   b. Follower ring: Lug type restraint system.
      1) Follower ring: Ductile iron in accordance with ASTM A 536.
      2) Restraining lugs: Ductile iron in accordance with ASTM A 536.
         a) Designed to contact the pipe and apply forces evenly.
      3) Restraining bolts:
         a) Ductile iron in accordance with ASTM A 536.
         b) Bolt heads shall be designed to twist off when the proper torquehas been applied.
   c. Bolts and hex nuts:

1) Aboveground: High strength, low alloy steel in accordance with AWWA C111, xylan coated.
2) Buried and underwater: Type 316 stainless steel bolts in accordancewith ASTM F 593.

3. Flange design: Class D steel ring flange in accordance with AWWA C207compatible with ANSI Class 125 and 150 bolt circles.
4. Coating and lining: Manufacturer's standard fusion bonded epoxy, NSF 61certified.
5. Angular deflection: Restrained flange coupling adapter must allow angular deflection after assembly.

F. Grooved joint couplings:
1. Manufacturers:
a. Victaulic Company, Series 31 or equal.
2. Materials:
a. Housings: Ductile iron in accordance with ASTM A 536.
b. Gasket:
1) FlushSeal® type, or equal. Elastomer in accordance withASTM D 2000.
c. Bolts and nuts: Electroplated steel in accordance with ASTM A 449.
d. Coating: As specified in Section 09_96_01.
3. For use with rigid or flexible radius grooved components in accordance withAWWA C606.
4. For connection to IPS steel pipe sizes, Victaulic Style 307.

2.2 PIPE COUPLINGS FOR STEEL PIPING

A. Dismantling joints:
1. Manufacturers: One of the following or equal:
a. Romac Industries, Inc., Style DJ400.
b. Smith-Blair, Inc., Series 975.
2. Materials:
a. Flanged spool:
1) C207 Schedule 40 pipe in accordance with ASTM A 53 for sizes3 inches to 12 inches.
2) Steel for pipe in accordance with ASTM A 36 or A 53 for sizes14 inches to 72 inches.
b. End ring and body:
1) For sizes 3 inches to 12 inches, ductile iron in accordance with ASTM A 536.
2) For sizes 14 inches to 72 inches, steel in accordance withASTM A 36.
c. Follower ring: Ductile iron in accordance with ASTM A 536 or steel in accordance with ASTM A 36 or A 576.
d. Bolts and hex nuts:
1) Aboveground: High strength, low alloy steel in accordance with AWWA C111, xylan coated.
2) Buried and underwater: Type 316 stainless steel bolts in accordancewith ASTM F 593.
e. Tie rods: High tensile steel in accordance with ASTM A 193 grade B7.

3. Flange design: Class D steel ring flange in accordance with AWWA C207compatible with ANSI Class 125 and 150 bolt circles.
4. Coating and lining: Fusion bonded epoxy certified in accordance with NSF 61.

B. Flanged coupling adapters:
1. Manufacturers: One of the following or equal:
   a. Dresser, Inc., Style 128-W.
   b. Romac Industries, Inc., Style FCA501 (10 inch and smaller) orStyle FC400 (12 inch and larger).
   c. Smith-Blair, Inc., Series 913.
2. Materials:
   a. Flange and flanged body: Ductile iron or low carbon steel having a minimum yield strength of 30,000 pounds per square inch.
   b. Follower ring: Low carbon steel having a minimum yield strength of30,000 pounds per square inch.
   c. Bolts and hex nuts:
      1) Aboveground: High-strength, low-alloy steel in accordance with AWWA C111, xylan coated.
      2) Buried and underwater: Type 316 stainless steel bolts in accordancewith ASTM F 593.
3. Flange design: Class D steel ring flange in accordance with AWWA C207compatible with ANSI Class 125 and 150 bolt circles.
4. Coating and lining: Manufacturer's standard fusion bonded epoxy, NSF 61certified.

C. Flexible couplings:
1. Manufacturers: One of the following or equal:
   a. Dresser, Inc., Style 38.
   b. Smith-Blair, Inc., Series 411.
   c. Romac Industries, Inc., Style 511 or Style 400.
2. Materials:
   a. Center sleeve and follower flanges: Ductile iron or low carbon steel having a minimum yield strength of 30,000 pounds per square inch.
   b. Bolts and hex nuts:
      1) Aboveground: High strength, low alloy steel in accordance with AWWA C111, xylan coated.
      2) Buried and underwater: Type 316 stainless steel bolts in accordancewith ASTM F 593.
3. Coating and lining: Manufacturer's standard fusion bonded epoxy, NSF 61certified.
4. Center sleeve dimensions: Provide center sleeves with lengths in accordancewith following table:

Nominal Pipe Diameter	Sleeve Length
2-1/2 inch and smaller	Manufacturer's standard
3 inch through 6 inch	7 inch
8 inch through 14 inch	7 inch
Greater than 14 inches	10 inch

D. Restrained flange coupling adapters:
1. Manufacturers: One of the following or equal:
a. Romac Industries, Inc., Style RFCA
b. Star Pipe Products, 3200 StarFlange.
2. Materials:
a. Flange and flanged body: Ductile iron in accordance with ASTM A 536.
b. Follower ring: Lug type restraint system.
1) Follower ring: Ductile iron in accordance with ASTM A 536.
2) Restraining lugs: Ductile iron in accordance with ASTM A 536.
a) Designed to contact the pipe an apply forces evenly.
3) Restraining bolts: Ductile iron in accordance with ASTM A 536. Bolt heads shall be designed to twist off when the proper torque has beenapplied.
c. Bolts and hex nuts:
1) Aboveground: High-strength, low-alloy steel in accordance with AWWA C111, xylan coated.
2) Buried and underwater: Type 316 stainless steel bolts in accordancewith ASTM F 593.
3. Flange design: Class D steel ring flange in accordance with AWWA C207compatible with ANSI Class 125 and 150 bolt circles.
4. Coating and lining: Manufacturer's standard fusion bonded epoxy certified in accordance with NSF 61.

E. Grooved joint couplings:
1. Model numbers from one manufacturer are shown to indicate type only. Equivalent products of other manufacturers may be submitted for approval.
2. Coating: As specified in Section 09_96_01.
3. Sizes through 12 inch:
a. Rigid type:
1) Housings shall be cast with offsetting angle-pattern bolt pads to provide rigidity and system support and hanging in accordance withASME B31.1 and B31.9.
2) 2 inch through 6 inch: Installation-ready, for direct stab installation without field disassembly, with grade EHP gasket rated to plus 250degrees Fahrenheit.
3) Manufacturer: One of the following or equal:
a) Victaulic Style 107.
b) Victaulic Zero-Flex Style 07.
b. Flexible type:
1) For use in locations where vibration attenuation and stress relief arerequired.
2) Three flexible couplings may be used in lieu of a flexible connector.
3) The couplings shall be placed in close proximity to the source of thevibration.
4) Manufacturer: The following or equal:
a) Victaulic Style 77.
c. Flange adapter:
1) Flat face, ductile iron housings with elastomer pressure responsive gasket, for direct connection to ANSI Class 125 or 150 flanged components.

2) Manufacturer: The following or equal:
a) Victaulic Style 741.

4. Sizes 14 inch through 24 inch:
a. Victaulic AGS series with lead-in chamfer on housing key and wide width FlushSeal® gasket.
b. Rigid type:
1) Housing key shall fill the wedge shaped AGS groove and provide rigidity and system support and hanging in accordance with ASME B31.1 and B31.9.
2) Manufacturer: The following or equal:
a) Victaulic Style W07.
c. Flexible type:
1) Housing key shall fit into the wedge shaped AGS groove and allow for linear and angular pipe movement.
2) Manufacturer: The following or equal:
a) Victaulic Style W77.
d. Flange adapter:
1) Flat face, ductile iron housings with elastomer pressure responsive gasket, for direct connection to ANSI Class 125 or 150 flanged components.
2) Manufacturer: The following or equal:
a) Victaulic Style W741.
5. For sizes 30 inch and larger:
a. Manufacturer: The following or equal:
1) Victaulic Style AGS multiple-segment housing may be used.

F. Bolted, split-sleeve couplings:
1. Provide bolted, split-sleeve couplings where indicated on the Drawings or asan alternative to flexible couplings when approved by the Engineer for each individual case.
2. Split-sleeve type pipe coupling with double arch cross section.
a. Coupling shall be designed to close around the pipe ends, confining the gaskets beneath the arches of the sleeve.
b. A watertight, axial seal is created by tightening the bolts to pull the coupling against the outside wall of the pipe.
3. Coatings:
a. Couplings shall be epoxy-coated on the inner diameter and outer diameter prior to delivery.
b. Buried couplings shall receive additional protection against corrosion that matches the pipe as specified.
4. Couplings: Wall thickness that is adequate for the test pressure.
a. Provide split-sleeve type coupling in an-"expansion x expansion" configuration where indicated on the Drawings.
b. Where restrained pipe joints are required or are indicated on theDrawings, provide split sleeve type coupling in a "fixed x fixed" configuration.
1) Coordinate with coupling manufacturer and pipe supplier to providerestraint rings on pipe.
2) Coupling manufacturer to supply the restraint rings.

c. Where axial pipe expansion must be accommodated or where they are indicated on the Drawings, provide split-sleeve type coupling in a "fixed x expansion" configuration.
   1) Coordinate with coupling manufacturer and pipe supplier to providerestraint ring on fixed side of coupling.
   2) Coupling manufacturer to supply the restraint rings.

d. Axial restraint and angular deflection:
   1) Where axial restraint is required to resist pipe thrust and angular deflection is required to provide flexibility in the piping or where they are indicated on the Drawings, provide split-sleeve type coupling in a"fixed x fixed modified" configuration.
   2) Install coupling with manufacturer's recommended-gap between ends of piping with the shoulders of coupling bearing on the inner restraint rings that are welded to the piping at both ends of coupling.
   3) Coupling shall be designed for an angular deflection of not less thanthe angular defection indicated in the following table unless a larger angular deflection in indicated on the Drawings.

Nominal Pipe Diameter	Allowable Angular Deflection
18 inch and smaller	3 degrees
20 inch	2.5 degrees
24 inch	2 degrees
30 inch	1.75 degrees
36 inch	1.5 degrees
42 inch	1.25 degrees
48 and 54 inch	1 degree
60 inch	0.875 degrees
66 and 72 inch	0.75 degrees

5. Restraint rings:
   a. Provide where required to create a restrained joint.
   b. Coordinate with piping manufacturer.
   c. Shop fabricate pipe with restraint rings that engage the interior edge of thecoupling shoulder.
      1) Weld for restraint ring: Suitable for test pressures indicated in the Piping Schedule as specified in Section 40_05_00.01.
6. Gaskets: The sealing members are comprised of 2 O-ring gaskets. Internal pressure shall not be required to affect the seal. For water service, the gasket supplied shall be Isoprene or Buna-N in accordance with ASTM D 2000 for design pressure within temperature range of minus 20 to 180 degrees Fahrenheit.
   a. Elastomers shall have properties in accordance with ASTM D 2000.
7. Manufacturers: One of the following or equal:
   a. "Expansion x expansion" configuration:
      1) Victaulic, Depend-O-Lok, E x E, Type 2 Coupling.
   b. "Fixed x expansion" configuration:
      1) Victaulic, Depend-O-Lok, F x E, Type 2 Coupling.

c. "Fixed x fixed" configuration:
1) Victaulic, Depend-O-Lok, F x F, Type 2 Coupling.
d. "Fixed x fixed modified" configuration:
1) Victaulic, Depend-O-Lok, F x F, Type 2 Modified Restrained Coupling.

8. Materials:
a. Couplings: Steel in accordance with ASTM A 36.
b. Bolts and nuts: In accordance with ASTM A 325 and ASTM A 563.
9. Pipe preparation:
a. Pipe ends shall be smooth for expansion or contraction requirements.
b. Where thrust restraint is required or is indicated on the Drawings, pipe ends shall include restraint rings affixed for pipe end restraint requirements.
c. The coupling manufacturer shall provide restraint rings that shall be shop welded to the pipe in accordance with the manufacturer's requirements.
d. Follow coupling manufacturer's recommendation for size and amount of welding required to attach the restraint rings to the pipe.

G. Bolted, split-sleeve flanged adapter couplings:
1. Provide bolted, split-sleeve, flanged adaptor couplings where indicated on the Drawings or as an alternative to flexible coupling type flange adaptors when approved by the Engineer for each individual case.
2. Flanged adapter with split-sleeve type coupling with double arch cross section.
a. Coupling shall be designed to confine the gaskets beneath the arches of the sleeve.
b. A watertight, axial seal is created by tightening the bolts to pull the coupling together and seat the gaskets against the outside wall of the pipe and adapter.
3. Coatings:
a. Couplings shall be epoxy-coated on the inner diameter and outer diameter prior to delivery.
b. Buried couplings shall receive additional protection against corrosion that matches the pipe as specified.
4. Couplings: Wall thickness that is adequate for the test pressure specified inthe Piping Schedule.
a. Provide coupling in a "flanged x expansion" configuration where indicated on the Drawings.
b. Where axial pipe movement must be restrained, provide coupling in a "flanged x fixed" configuration.
1) Coordinate with pipe supplier to provide restraint ring on fixed side ofcoupling.
c. Where axial restraint is required to resist pipe thrust and angular deflection is required to provide flexibility in the piping, provide sleeve type coupling in a "flanged fixed x fixed modified" configuration.
1) Install coupling with full 1-1/2-inch gap between ends of pipe with shoulder of coupling bearing on ring welded to pipe at both ends ofcoupling.
2) Coupling shall be designed for an angular deflection of not less thanthe angular deflection indicated in the following table unless a largerangular deflection in indicated on the Drawings.

Nominal Pipe Diameter	Allowable Angular Deflection
18 inch and smaller	3 degrees
20 inch	2.75 degrees
24 inch	2.375 degrees
30 inch	2 degrees
36 inch	1.5 degrees
42 inch	1.375 degrees
48 and 54 inch	1 degree
60 and 66 inch	0.875 degrees
72 and 78 inch	0.75 degrees

1. Restraint rings:
   a. Provide where required to create a restrained joint.
   b. Coordinate with piping manufacturer.
   c. Shop fabricate pipe with restraint rings that engages the interior edge ofthe coupling shoulder.
      1) Weld for restraint ring: Suitable for test pressures as specified in thePipe Schedule as specified in Section 40_05_00.01.
2. Gaskets:
   a. The sealing members are comprised of 2 O-ring gaskets. Internalpressure shall not be required to affect the seal.
   b. For water service, the gasket supplied shall be Isoprene or Buna-N in accordance with ASTM D 2000 for design pressure within temperaturerange of minus 20 to 180 degrees Fahrenheit.
   c. Elastomers shall have properties in accordance with ASTM D 2000.
3. Manufacturers: One of the following or equal:
   a. "Flanged x expansion" configuration:
      1) Victaulic, Depend-O-Lok, F x E, Type 2 Flanged Adapter Coupling.
   b. "Flanged x fixed" configuration:
      1) Victaulic, Depend-O-Lok, F x F, Type 2 Flanged Adapter Coupling.
   c. "Flanged x fixed modified" configuration:
      1) Victaulic, Depend-O-Lok, F x F, Type 2 Modified, Flange AdapterCoupling
4. Materials:
   a. Couplings: Steel in accordance with ASTM A 36.
   b. Bolts and nuts: In accordance with ASTM A 325 and ASTM A 563.
5. Pipe preparation:
   a. Pipe ends shall be smooth for expansion or contraction requirements.
   b. Where thrust restraint is required or is indicated on the Drawings, pipeends shall include restraint rings affixed for pipe end restraint requirements.

c. The coupling manufacturer shall provide restraint rings that shall be shopwelded to the pipe in accordance with the manufacturer's requirements.

d. Follow coupling manufacturer's recommendation for size and amount of welding required to attach the restraint rings to the pipe.

2.3 PIPE COUPLINGS FOR STAINLESS STEEL PIPING

A. Flexible couplings:
1. Manufacturers: One of the following or equal:
a. Dresser, Inc., Style 38.

B. Grooved joint couplings:
1. Manufacturers: One of the following or equal
a. Victaulic Company.
2. Materials:
a. Housings:
1) Ductile iron in accordance with ASTM A 536.
2) Stainless steel in accordance with ASTM A 351.
b. Gasket: Elastomer in accordance with ASTM D 2000.
c. Bolts and nuts:
1) Electroplated steel in accordance with ASTM A 449.
2) Stainless steel in accordance with ASTM F 593.
3. Rigid type:
a. Victaulic Style 89 and W89 (ductile iron housings)
b. Victaulic Style 489 (stainless steel housings)
4. Flexible type: Victaulic Style 77S.

C. Bolted, split-sleeve couplings:
1. Split-sleeve type pipe coupling with a fully stainless steel double arch cross section. Coupling shall be designed to close around the pipe ends, confiningthe gaskets beneath the arches of the sleeve. A watertight, axial seal is created by tightening the bolts to pull the coupling against the outside wall ofthe pipe.
2. Manufacturers: One of the following or equal:
a. "Expansion x expansion" configuration:
1) Victaulic, Depend-O-Lok, E x E, Type 2 Coupling.
b. "Fixed x expansion" configuration:
1) Victaulic, Depend-O-Lok, F x E, Type 2 Coupling.
c. "Fixed x fixed" configuration:
1) Victaulic, Depend-O-Lok, F x F, Type 2 Coupling.
d. "Fixed x fixed modified" configuration:
1) Victaulic, Depend-O-Lok, F x F, Type 2 Modified Restrained Coupling.
3. Materials:
a. Couplings: Stainless steel in accordance with ASTM A 240.
b. Bolts and nuts: In accordance with ASTM F 593 and ASTM F 594.
4. Pipe preparation:
a. Pipe ends shall be smooth for expansion or contraction requirements.
b. Where thrust restraint is required or is indicated on the Drawings, pipe ends shall include restraint rings affixed for pipe end restraint requirements.

c. The coupling manufacturer shall provide restraint rings that shall be shop welded to the pipe in accordance with the manufacturer's requirements.
d. Follow coupling manufacturer's recommendation for size and amount of welding required to attach the restraint rings to the pipe.

2.4 GASKETS FOR FLEXIBLE COUPLINGS AND FLANGED COUPLING ADAPTERS

A. Provide gasket materials for piping applications as follows:
1. Low-pressure and high-pressure air, steam, hot water: EPDM.
2. All other piping applications: EPDM.

2.5 EXTERIOR COATINGS FOR UNDERGROUND AND SUBMERGED APPLICATIONS

A. Manufacturers: One of the following or equal:
1. Tapecoat Company, Inc., T.C. Mastic.
2. Kop-Coat Company, Inc., Bitumastic Number 50.

B. Thickness: Minimum 0.040 inch.

PART 3 EXECUTION

3.1 INSTALLATION

A. In underground and underwater installations, coat the exterior of coupling with aprotective coating after installation.

B. In underground installations, wrap the flexible pipe couplings and flanged coupling adapters with heat shrink sleeves on top of the exterior coatings required above in accordance with AWWA C216. Cross-linked polyolefin wrap or sleeve with a masticsealant, 85-mils total thickness, shall be provided. The heat shrink sleeves shall be as manufactured by Canusa, or equal.

C. Joints and flexible connections shall be installed centered with no angular deflectionunless otherwise indicated on the Drawings.

D. Flexible couplings and flange coupling adapters: Install with gap between pipe endsin accordance with the following table unless a greater gap is indicated on the Drawings. Maximum gap tolerance shall be within 1/8 inch.
1. Install flexible coupling with pipe gap located in middle of center sleeve.
2. Install flanged coupling adapter with end of plain end pipe in middle of flanged coupling body.

Center Ring Length	Gap Dimension and Tolerance
4 inch through 6 inch	3/8 inch
7 inch	5/8 inch
10 inch and greater	7/8 inch

E. Provide harnesses (tie-downs) for flexible couplings unless otherwise indicated on the Drawings with a written note.
   1. Design harnesses (tie-downs) for the test pressures as specified.

F. Grooved joint couplings:
   1. Grooved joints shall be installed in accordance with the manufacturer's latest published installation instructions.
   2. Grooved ends shall be clean and free from indentations, projections, and rollmarks in the area from pipe end to groove.
   3. Gaskets shall be of an elastomer grade suitable for the intended service, and shall be molded and produced by the coupling manufacturer.
   4. The grooved coupling manufacturer's factory trained representative shall provide on-site training for Contractor's field personnel in the use of groovingtools and installation of grooved joint products. The representative shall periodically visit the jobsite and review Contractor is following best recommended practices in grooved product installation. (A distributor's representative is not considered qualified to conduct the training or jobsite visit(s).)

G. Bolted, split-sleeve couplings:
   1. Inspect each coupling to ensure that there are no damaged portions of the coupling.
      a. Pay particular attention to the sealing pad/sealing plate area.
      b. Before installation, thoroughly clean each coupling of any foreign substance which may have collected thereon and shall be kept clean at all time.
   2. Wrenches used shall be of a size and type recommended by themanufacturer.
      a. Bolts and studs shall be tightened so as to secure a uniform gasket compression between the coupling and the body of the pipe with all bolts or studs tightened approximately the same amount.
      b. Final tightening shall be done by hand (no air impact wrenches) and is complete when the coupling is in uniform contact with the outside surface of the pipe all around the circumference of the pipe.
   3. No joint shall be misfit any amount that would be detrimental to the strengthand water tightness of the finished joint.
   4. On the fixed ends of bolted, split-sleeve couplings, the shoulders shall bear onthe restraint rings all around with no gap.
   5. Ends of piping where coupler are installed shall be smooth and free of defects.
      a. Remove weld splatter and grind smooth.
      b. Grind pipe seam welds flush with pipe wall and smooth.

END OF SECTION

SECTION 40_05_07.03

PIPE SUPPORTS

PART 1 GENERAL

1.1 SUMMARY

A. Pipe supports as required by the Drawings and/or as indicated in this or other Specification sections.

B. Pipe supports listed may not be used on this project, see Drawings and other sections of the Contract Documents for specific requirements.

C. Should conflict occur between this Specification section and other sections of the Contract Documents, the most stringent/expensive shall govern. Notify Engineer of conflicts.

1.2 RELATED SECTIONS

A. Section 01_00_01 Basic Requirements

B. Section 01_33_01 General Submittal Requirements

C. The Contract Documents are a complete unit and complementary to each other. The individual Specification sections and other Contract Documents do not contain all cross references to "related work" or "related sections." It is the Contractor's responsibility to review the complete Contract Documents in order to properly scope, schedule and coordinate the work of any/all subcontractors, suppliers, and others on this project. Anything called out in one location of the Contract Documents is binding as if it were called out in all sections of the Contract Documents.

1.3 SUBMITTALS

A. Submittals for products and miscellaneous items in this specification section shall be submitted in accordance with Section 01_33_01 General Submittal Requirements and related submittal sections and provisions of the Contract Documents.

1.4 REFERENCES

A. The Contractor and/or Manufacturer shall follow the standards listed below, except as otherwise specified herein. The latest revision or edition in effect at the time of bid opening shall be utilized.

B. ASTM International (ASTM):
1. A 123 – Standard Specification for Zinc (Hot-Dip Galvanized) Coatings on Ironand Steel Products.
2. A 380 – Standard Practice for Cleaning, Descaling, and Passivation of Stainless Steel Parts, Equipment, and Systems.
3. A 967 – Standard Specification for Chemical Passivation Treatments forStainless Steel Parts.

C. Manufacturer's Standardization Society (MSS):
1. SP-58 – Pipe Hangers and Supports – Materials, Design, and Manufacture.

PART 2 PRODUCTS

2.1 MATERIALS

A. General:
1. Hot dip galvanized:
a. Hot dip after fabrication of support in accordance with ASTM A 123.
2. Stainless steel.
a. Finish requirements: Remove free iron, heat tint oxides, weld scale, and other impurities, and obtain a passive finished surface.
b. At the shop, perform pickling and passivation on all surfaces inside and out in accordance with ASTM A 380 or A 967.
1) Passivation treatments using citric acid are not allowed.
c. Field welding is prohibited unless specifically allowed by the Owner. All fiend welds shall be passivated.

B. Outdoor areas: Areas exposed to the natural outdoor environment.

C. Indoor areas: Areas exposed to an indoor environment including pipe galleries, channels and tunnels.

D. Submerged to 3 feet or less above water level in a structure, or inside a water bearing structure.

2.2 PIPE SUPPORTS

A. Hanger rods: Sized to match suspended pipe hanger, or as indicated on the Drawings:
1. Manufacturers: One of following or equal:
a. For stainless steel piping:
1) Bergen-Power, Figure 133.
2) Nibco-Tolco, Figure 103.
b. For all other piping, unless indicated on the Drawings:
1) Anvil International, Figure 140.
2) Bergen-Power, Figure 133.
3) Cooper B-Line Systems, Inc., Figure B3205.

B. Hanger rods, continuously threaded: Sized to match suspended pipe hanger, or as indicated on the Drawings:
1. Manufacturers: One of the following or equal:
a. For stainless steel piping:
1) Bergen-Power, Figure 94.
2) FM Stainless Fasteners.
b. For steel and ductile iron piping:
1) Anvil International, Figure 146.
2) Bergen-Power, Figure 94.

C. Eye bolts:

1. For stainless steel piping:
    a. Type 316 stainless steel, welded and rated equal to full load capacity of rod.
2. For all other piping, unless indicated on the Drawings:
    a. Welded and rated equal to full load capacity of rod.

D. Welded eyebolt rod:
1. Manufacturers: One of the following or equal:
    a. For stainless steel piping:
        1) Nibco-Tolco, Figure 101.
        2) FM Stainless Fasteners.
    b. For all other piping, unless indicated on the Drawings:
        1) Anvil International, Figure 278.
        2) Bergen-Power, Figure 93.
        3) Cooper B-Line Systems, Inc., Figure B3210.

E. Adjustable ring hangers: MSS SP-58, Type 7 or Type 9 (system dependent):
1. Manufacturers: One of the following or equal:
    a. For stainless steel piping:
        1) Nibco-Tolco, Figure 1C.I.
        2) Bergen-Power, Figure 100SS.
    b. For all other piping, unless indicated on the Drawings:
        1) Anvil International, Figure 97.
        2) Cooper B-Line Systems, Inc., Figure B3172.

F. Adjustable clevis hangers: MSS SP-58, Type 1:
1. Manufacturers: One of the following or equal:
    a. For stainless steel piping:
        1) Cooper B-Line Systems, Inc, Figure B3100 or B3102.
        2) FM Stainless Fasteners, Figure 60.
    b. For all other piping, unless indicated on the Drawings:
        1) Anvil International, Figure 260 or Figure 590.
        2) Bergen-Power, Figure 100.
        3) Cooper B-Line Systems, Inc., Figure B3100 or B3102.

G. Adjustable clevis hangers for insulated pipe: Oversize:
1. Manufacturers: One of the following or equal:
    a. For stainless steel piping:
        1) Nibco-Tolco, Figure 1A.
    b. For all other piping, unless indicated on the Drawings:
        1) Anvil International, Figure 300.
        2) Bergen-Power, Figure 100EL.
        3) Cooper B-Line Systems, Inc. Figure B3108.

H. Single rod hangers for steam pipe: MSS SP-58, Type 43; malleable iron or steelyoke and roller hangers; swivel to allow rotation of yoke on rod:
1. Manufacturers: One of the following:
    a. For stainless steel piping:
        1) Nibco-Tolco, Figure 324.
        2) Cooper B-Line Systems, Inc., Figure B3110.
        3) FM Fasteners, Figure 81.

b. For all other piping, unless indicated on the Drawings:
1) Anvil International, Figure 181.
c. Cooper B-Line Systems, Inc., Figure B3110.

I. Double rod hangers for steam pipe: MSS SP-58, Type 41:
1. Manufacturers: One of the following or equal:
a. For stainless steel piping:
1) FM Stainless Fasteners, Figure 71.
b. For all other piping, unless indicated on the Drawings:
1) Anvil International, Figure 171.
2) Cooper B-Line Systems, Inc., Figure B3114.

J. Brackets: MSS SP-58, Type 32 with back plate; rated for 1,500 pounds:
1. Manufacturers: One of the following:
a. For stainless steel piping:
1) Nibco-Tolco, Figure 30M.
2) Cooper B-Line Systems, Inc., Figure B3066.
3) FM Stainless Fasteners, Figure 98.
b. For all other piping, unless indicated on the Drawings:
1) Anvil International, Figure 195.
2) Cooper B-Line Systems, Inc., Figure B3066.

K. Brackets, heavy duty: MSS SP-58, Type 33 with back plate; rated for 3,000 pounds:
1. Manufacturers: One of following or equal:
a. Anvil International, Figure 199.
b. Cooper B-Line Systems, Inc., Figure B3067.

L. Standard U-bolt: MSS SP-58, Type 24:
1. Manufacturers: One of the following:
a. For stainless steel piping:
1) Nibco-Tolco, Figure 110.
2) Cooper B-Line Systems, Inc., Figure B3188.
3) FM Stainless Fasteners, Figure 37.
b. For all other piping, unless indicated on the Drawings:
1) Anvil International, Figure 137.
2) Bergen-Power, Figure 283.
3) Cooper B-Line Systems, Inc., Figure B3188.

M. Riser clamps: MSS SP-58, Type 8:
1. Manufacturers: One of the following:
a. For stainless steel piping:
1) Cooper B-Line Systems, Inc., Figure B3373.
2) FM Stainless Fasteners, Figure 61.
b. For all other piping, unless indicated on the Drawings:
1) Anvil International, Figure 261.
2) Bergen-Power, Figure 126.
3) Cooper B-Line Systems, Inc., Figure B3373.

N. Pipe clamps: MSS SP-58, Type 4:
1. Manufacturers: One of the following:
a. For stainless steel piping:

1) Nibco-Tolco, Figure 4.
2) Cooper B-Line Systems, Inc., Figure 3140.

b. For all other piping, unless indicated on the Drawings:
1) Anvil International, Figure 212.
2) Bergen-Power, Figure 175.
3) Cooper B-Line Systems, Inc., Figure B3140.

O. Adjustable offset pipe clamp:
1. Manufacturers: One of the following:
a. For stainless steel piping:
1) Nibco-Tolco, Figure 4.
2) Cooper B-Line Systems, Inc., Figure B3149.
3) FM Stainless Fasteners, Figure 63.
b. For all other piping, unless indicated on the Drawings:
1) Anvil International, Figure 100.
2) Cooper B-Line Systems, Inc., Figure B3149.

P. Offset pipe clamp:
1. Manufacturers: One of the following:
a. For stainless steel piping:
1) Nibco-Tolco, Figure 8.
2) Cooper B-Line Systems, Inc., Figure 3148.
b. For all other piping, unless indicated on the Drawings:
1) Anvil International, Figure 103.
2) Cooper B-Line Systems, Inc., Figure B3148.

Q. Floor stand or stanchion saddles: MSS SP-58, Type 37. Provided with U-bolt holddown yokes:
1. Manufacturers: One of the following:
a. For stainless steel piping:
1) Nibco-Tolco, Figure 318.
2) FM Stainless Fasteners, Figure 59.
b. For all other piping, unless indicated on the Drawings:
1) Anvil International, Figure 259.
2) Bergen-Power, Figure 125.
3) Cooper B-Line Systems, Inc., Figure B3090.
c. Threaded pipe stand support stanchion. Match pipe support material.
1) Anvil International, Figure 63T.
2) Beregen Power, (None found)
3) Cooper B-Line Systems Inc., Figure B3088ST.

R. Spring hangers:
1. Manufacturers: One of the following:
a. For stainless steel piping:
1) Bergen-Power, Figure 920.
b. For all other piping, unless indicated on the Drawings:
1) Anvil International, Figure B-268, Type G.
2) Bergen-Power, Figure 920.

S. One hole pipe clamps:
1. Manufacturers: One of the following or equal:

a. For stainless steel piping:
   1) Not used.
b. For all other piping:
   1) Anvil International, Figure 126.
   2) Carpenter & Paterson, Figure 237S.

T. Welded beam attachment: MSS SP-58, Type 22:
1. Manufacturers: One of the following:
   a. For stainless steel piping:
      1) Nibco-Tolco, Figure 304.
      2) Cooper B-Line Systems, Inc., Figure 3083.
   b. For all other piping, unless indicated on the Drawings:
      1) Anvil International, Figure 66.
      2) Bergen-Power, Figure 113A or 113B.
      3) Cooper B-Line Systems, Inc., Figure B3083.

U. Heavy pipe clamp: MSS SP-58, Type 4:
1. Manufacturers: One of the following:
   a. For stainless steel piping:
      1) Nibco-Tolco, Figure 4H.
   b. For all other piping, unless called out otherwise on the Drawings:
      1) Anvil International, Figure 216.
      2) Bergen-Power, Figure 298.

V. PTFE pipe slide assembly: MSS SP-58, Type 35 with lateral and vertical restraint:
1. Manufacturers: One of the following:
   a. For stainless steel piping:
      1) Nibco-Tolco, Figure 426.
   b. For all other piping, unless indicated on the Drawings:
      1) Anvil International, Figure 257, Type 3.
      2) Cooper B-Line Systems, Inc., Figure B3893.

PART 3 EXECUTION

3.1 INSTALLATION

A. Properly support, suspend, or anchor exposed pipe, fittings, valves, and appurtenances to prevent sagging, overstressing, or movement of piping; and toprevent thrusts or loads on or against connected pumps, blowers, and other equipment.

B. Field verify support location, orientation, and configuration to eliminate interferencesprior to fabrication of supports.

C. Carefully determine locations of inserts. Anchor to formwork prior to placingconcrete.

D. Use flush shells only where indicated on the Drawings.

E. Do not use anchors relying on deformation of lead alloy.

F. Do not use powder-actuated fasteners for securing metallic conduit or steel pipe larger than 1 inch to concrete, masonry, or wood.

G. Suspend pipe hangers from hanger rods and secure with double nuts.

H. Install continuously threaded hanger rods only where indicated on the Drawings.

I. Use adjustable ring hangers or adjustable clevis hangers, for 4 inch and smallerdiameter pipe.

J. Use adjustable clevis hangers for pipe larger than 4 inches in diameter.

K. Secure pipes with double nutted U-bolts or suspend pipes from hanger rods andhangers.
1. For stainless steel piping, use stainless steel U-bolts.
2. For all other piping, use galvanized U-bolts.

L. Support spacing:
1. Support 2-inch and smaller piping on horizontal and vertical runs at maximum5 feet on center, unless otherwise specified.
2. Support larger than 2-inch piping on horizontal and vertical runs at maximum10 feet on center, unless otherwise specified.
3. Support exposed polyvinyl chloride and other plastic pipes at maximum 5 feeton center, regardless of size.
4. Support tubing, PVC pipe 1-inch and smaller, copper pipe and tubing, fiber-reinforced plastic pipe or duct, and rubber hose and tubing at intervals close enough to prevent sagging greater than 1/4 inch between supports.
5. Do not suspend or support valves, pipe and fittings from another pipe orconduit.

M. Install supports at:
1. Any change in direction.
2. Both sides of flexible pipe connections.
3. Base of risers.
4. Floor penetrations.
5. Connections to pumps, blowers, and other equipment.
6. Valves and appurtenances.

N. Securely anchor plastic pipe, valves, and headers to prevent movement duringoperation of valves.

O. Anchor plastic pipe between expansion loops and direction changes to prevent axial movement through anchors.

P. Provide elbows or tees supported from floors with base fittings where indicated onthe Drawings.

Q. Support base fittings with metal supports or when indicated on the Drawings supporton concrete piers.

R. Do not use chains, plumbers' straps, wire, or similar devices for permanentlysuspending, supporting, or restraining pipes.

S. Supports, clamps, brackets, and portions of support system bearing against copperpipe: Copper plated, copper throughout, or isolated with neoprene or polyvinyl chloride tape.

T. Where pipe is insulated, install over-sized supports and hangers.

U. Install insulation shield in accordance with MSS SP-58, Type 40. Shield shall be galvaized steel unless otherwise specified or indicated on the Drawings.

V. Install riser clamps at floor penetrations and where indicated on the Drawings.

END OF SECTION

SECTION 40_05_12

PIPING SPECIALTIES

PART 1 GENERAL

1.1 SCOPE OF WORK

A. Furnish all labor and materials required and installed complete and ready for operation, all appurtenances as shown on the Drawings and/or as specified herein for project conditions / installation.

B. All items listed in this Specification may or may not be required on this project (see Drawings and other section of Contract Documents.)

C. Should other Specification sections or Drawings reference an alternate manufacturer / model or provide alternate requirements, the more stringent / costly shall govern and be included in Contractor's bid.

D. Section includes:
1. Mechanical Type Wall Seals
2. Service Clamps
3. Dielectric Insulating Gasket Kits for Flanges
4. Dielectric Unions for Copper Tube
5. Flange Bolts and Nuts
6. Anti-Seize Bolting Lubricants
7. Non-Insulating Flange Gasket Materials
8. Sleeve ("Dresser type") Couplings
9. Insulated Sleeve Couplings
10. Flange Coupling Adapters
11. Depend-O-Lok Couplings
12. Harnessing and Restraint
13. Quick Connect Couplings
14. Wall and Floor Fittings
15. Gauges and Accessories
16. Valve Operators (Including Floor Boxes)
17. Strainers
18. Corporation Stops
19. Appurtenances and Miscellaneous Items
20. Emergency Safety Showers and Eyewash Units
21. Stainless Steel Expansion Joints
22. Rubber Expansion Joints
23. Flexible rubber connections.
24. Bellows type expansion joints.
25. Slip type expansion joints.
26. Rubber expansion joints.
27. Expansion joints for chemical services.
28. Vibration control joints.
29. Transition fittings.
30. Pipe saddles.

31. Tapping sleeves.
32. Sight glasses.
33. Spray nozzles.
34. Flange-mounted magnetic type level indicator.

E. All listed iron and steel products used in this project must be produced in the United States. The term "iron and steel products" means the following products made primarily of iron or steel: lined or unlined pipes and fittings, manhole covers and other municipal castings, hydrants, tanks, flanges, pipe clamps and restraints, valves, structural steel, reinforced precast concrete, and construction materials. The deminimis and minor components waiver apply to this contract for minor components.

1.2 SUBMITTALS

A. Submittals for products and miscellaneous items in this specification section shall be submitted in accordance with Section 01_33_01 General Submittal Requirements and related submittal sections and provisions of the Contract Documents.

1.3 RELATED SECTIONS

A. Section 01_00_01 Basic Requirements

B. Section 01_33_01 General Submittal Requirements

C. The Contract Documents are a complete unit and complementary to each other. The individual Specification sections and other Contract Documents do not contain all cross references to "related work" or "related sections." It is the Contractor's responsibility to review the complete Contract Documents in order to properly scope, schedule and coordinate the work of any/all subcontractors, suppliers, and others on this project. Anything called out in one location of the Contract Documents is binding as if it were called out in all sections of the Contract Documents.

1.4 REFERENCE STANDARDS

A. American National Standards Institute (ANSI): ANSI B2.1.
1. ANSI Z358.1 - American National Standard for Emergency Eyewash and Shower Equipment.

B. American Society for Testing and Materials (ASTM):
1. ASTM A 126 - Specification for Gray Iron Castings for Valves, Flanges, and Pipe Fittings
2. ASTM A 183 - Specification for Carbon Steel Track Bolts and Nuts
3. ASTM A 278 - Specification for Gray Iron Castings for Pressure Containing Parts for Temperatures Up to 650 degrees F
4. ASTM B 62 - Specification for Composition Bronze or Ounce Metal Castings
5. ASTM B 88 - Specification for Seamless Copper Water Tube
6. ASTM A 536 - Specification for Ductile Iron Castings

C. American Water Works Association (AWWA):
1. AWWA C219 - Bolted, Sleeve-Type Couplings for Plain End Pipe
2. AWWA C606 - Grooved and Shouldered Joints

PART 2 PRODUCTS

2.1 GENERAL

A. Joint, size and material - unless otherwise specified or required:
   1. Joints referred to herein shall be of the same nominal diameter as the pipe or fittings they are connected to.
   2. Appurtenance shall be of the same nominal diameter as the pipe or fittings they are connected to.

B. Ensure that valves and appurtenances have ends/joints that are compatible with, and may be fastened to the adjoining pipe. This may mean furnishing special adaptors as required. These adaptors shall be suitable for direct bury, with proper dielectric insulation and as a minimum, if metallic non-stainless steel or galvanized, coated with two coats of Coal Tar Epoxy.

2.2 MECHANICAL WALL SEALS

A. Mechanical type seals shall consist of an adjustable modular bolted, synthetic rubber and plastic sealing element as shown on Drawings. The sealing element shall be Link- Seal LS-300-C as manufactured by Enpro Industries., or equal.

2.3 SERVICE CLAMPS

A. Service clamps shall have malleable or ductile iron bodies which extend at least 360 degrees around the circumference of the pipe and shall have neoprene gaskets cemented to the saddle body. Bodies shall be tapped for IPS. Clamps shall be of the double strap design.

B. Service clamps shall be IPS service clamps as manufactured by Mueller Co., or equal.

2.4 DIELECTRIC INSULATING GASKET KITS FOR FLANGES

A. Dielectric insulating flange gasket kits shall be installed when dissimilar metal pipe connects to prevent galvanic action. Flange insulation kits shall be installed where a stainless steel flange is mated with flanges constructed of bronze alloys, carbon steel alloys, or nickel alloys (Monel, Hastelloy and Inconel) flanges; where process piping mates with valves and other equipment and appurtenances of dissimilar metals; where exposed piping makes a vertical transitions to buried piping; and where otherwise as shown on the Drawings.

B. Insulating flange gaskets shall be furnished as a kit including the dielectric gasket, bolt sleeves and washers in accordance to the nominal flange size.

C. Each dielectric insulating gasket shall be a full face isolating and sealing gasket, Type "E", 1/8" thick, epoxy-glass retainer with bolt holes cut to match mating flange drilling. The retainer shall contain a precision tapered groove to accommodate the controlled compression of a FKM (Viton) sealing element. The quad-ring seal shall be pressure energized. The epoxy-glass retainer shall have 550-volts/mil dielectric strength and a minimum 50,000 psi compressive strength.

D. Insulating bolt-sleeves shall be manufactured of Mylar having a dielectric strength of not less than 4000-volts/mil.

E. Insulating washers shall be manufactured of G-10 epoxy-glass having a dielectric strength of 400 to 500-volts/mil. Insulating washers shall be installed with metallic backing washers to prevent damage to the epox-glass washers during bolting. The metallic washers shall be constructed of the same material as the bolts.

F. Dielectric insulating flange gasket kits shall be:
   1. Linebacker manufactured by Pipeline Seal and Insulator, Houston, Texas.
   2. Trojan Quad Seal manufactured by Advance Products and Systems, Lafayette, Louisiana.
   3. Jack O-ring gaskets manufactured by Central Plastics, Shawnee, Oklahoma.

2.5 FLANGE BOLTS AND NUTS

A. All flange bolt lengths shall be selected by the Contractor such that three threads, as a minimum, protrude from the hex nut and washer after assembly. Flange bolts for dielectric insulating flange kits shall be fully-threaded along their length. The Contractor is cautioned that flange bolts having smooth shank segments along their length will not fit in Mylar sleeves or molded sleeve washers.

B. Unless specifically stated otherwise, all bolts, nuts, and washers shall be Type 316 stainless steel.

C. ASME B1.1, coarse threads, Class 2A fit, and conform to ASTM A193, Grade B8M.

D. Flange nuts shall have ASME B1.1, coarse threads, Class 2A fit, and conform to ASTM A194 Grade 8M, Type 316 stainless steel, having square or hexagonal heavy dimensions in accordance with ASME B18.2.2.

2.6 ANTI-SEIZE BOLTING LUBRICANTS

A. Flange bolts shall be installed using a nickle-seize lubricant capable of achieving the required bolt torque and sealing stress, and permitting future disassembly with minimal manual input.

B. Anti-seize compound shall be classified as acceptable for potable water by the NSF.

C. Acceptable Manufacturers:
   1. Never-Seez White Food Grade PTFE Lubricant manufactured by Bostik, Wauwatosa, Wisconsin.
   2. Loctite Nickle Anti-Seize Lubricant manufactured by Henkel Technologies, Rocky Hill, Connecticut.

D. Flange bolts shall be adequately degreased of all corrosion inhibiting slush oil and excess nickle anti-seize prior to field application of prime and finish coatings.

2.7 SLEEVE ("DRESSER TYPE") COUPLINGS

A. Sleeve type couplings shall conform to the requirements of AWWA C219, with a pressure rating as indicated on the Drawings. The pressure rating of the couplings shall be at least the field test pressure it is subjected during the pressure testing of the connecting pipeline or the pressure class of the pipeline whichever is higher.

B. The couplings shall be of a gasketed, sleeve-type with diameter to properly fit the pipe. Each coupling shall consist of cylindrical sleeve, two follower rings, two gaskets and a set of bolts and nuts.
   1. Sleeve: Sleeve shall be ASTM A53, ASTM A512, ASTM A513, ASTM A536 Grade 65- 45-12 or carbon steel having a minimum yield strength of 30,000 psi. Sleeve shall be lined with 12 mil DFT fusion bonded epoxy compatible with potable water. Minimum sleeve length shall be five inches for pipe 12-inches and smaller, seven inches for pipe sizes 14-inches thru 24-inches, and 10-inches for pipe larger than 24-inches. Sleeve for stainless steel piping shall be fabricated of ASTM A240, Type 316 stainless steel.
   2. Follower Rings: Ductile Iron ASTM A536 Grade 65-45-12, AISI C1012, AISI C1015 Steel, AISI C1018 Steel or AISI C1020 Steel. Follower rings for stainless steel pipe shall be fabricated of ASTM A240, Type 316 stainless steel.
   3. Bolts and Nuts: Bolts and nuts are as specified in Paragraph 2.07 of this Section.
   4. Gaskets shall be of synthetic rubber suitable for operating conditions.
   5. Finish: Fusion bonded epoxy 12 mil DFT as per AWWA C213.

C. Sleeve type couplings shall have pipe stop removed for exposed piping.

D. Acceptable Manufacturers:
   1. Dresser Industries - Style 38, 138, or 253.
   2. Romac Industries, Inc. - Style 400, 501, or XR501.
   3. Smith-Blair - Model 411.

E. Sleeve type couplings shall be installed where shown on the Drawings and at locations where a disassembly gap is necessary to complete a piping assembly.

F. Contractor at his option may install additional couplings for ease of installations without any additional cost to the Owner.

G. In addition to those locations noted on the Drawings, sleeve couplings shall be provided on piping buried directly under a structure at the structure's expansion joints. Special treatment will be required where pipe is encased in concrete, utilizing minimum 3-inch thick styrofoam placed perpendicular to horizontal centerline coupling.

H. Joint harness shall be provided on all couplings and shall be designed for maximum pressure to which the line will be subjected.

2.8 FLANGE COUPLING ADAPTERS

A. Construction:
   1. Body and follower: Carbon Steel, Ductile Iron ASTM A 536, Grade 65-45-12.
   2. End Ring: Ductile Iron ASTM A536, Grade 65-45-12.
   3. Flange: ANSI Class 125 or 250 flat face. Match class to that of piping system.

4. Bolts and nuts: As per Paragraph 2.06 of this Section.
5. Gaskets shall be of synthetic rubber suitable for operating conditions.

B. Restraining or harnessing system shall be as shown on the contract drawings for flange coupling adaptor.

C. Factory Painting:
1. Apply fusion bonded epoxy-type protective coating system in accordance with AWWA C213, to interior and exterior of adapters. Coating for interior surface shall be NSF 61 approved for potable water. Coating to be Manufacturer's standard epoxy system complete with prime and finish coats minimum of 12 mils DFT for interior and exterior of flange coupling adapters.
2. Do not paint bolts and gaskets.
3. Coatings used on exterior of couplings which will be exposed shall be compatible with specified coating system for piping so that coupling can be painted a common color.

D. Acceptable Manufacturers:
1. Size twelve inches and larger:
   a. Romac Industries, Inc. - Style FC400.
   b. Dresser Style 131.
2. Below twelve inches:
   a. Romac Industries, Inc. - Style FCA501.
   b. Dresser Industries - Style 128-W.
   c. Smith Blair - Style 912

2.9 QUICK CONNECT COUPLINGS

A. Couplings shall be of the cam and groove type consisting of a male adapter conforming to F.S. MIL-C-27487. Male adapters shall be designed to receive a female coupler without requiring threading, bolting, or tools. Connections shall remain tight and leak proof under pressures up to 100 psig. Each adapter shall be furnished with a dust cap complete with an 18-inch long security chain of corrosion resistant material. Couplings shall be as manufactured by Dover Corporation, Ever-tite, or equal.

B. Adapters shall be furnished in accordance with the Drawings or as required by the installation.

2.10 WALL AND FLOOR FITTINGS

A. Wall and floor castings, unless otherwise specified with the individual type of pipe, shall be ductile iron of the style shown on the Drawings with integral exterior water stop, standard models as manufactured by Clow, U.S. Pipe and Foundry, or equal.

B. For plastic pipe or other pipe 2-1/2-inch diameter or less wall and floor fittings shall be ASTM A120, Schedule 40 steel sleeves with exterior steel water stop, all hot dipped galvanized after fabrication.

2.11 VALVE OPERATORS (INCLUDING FLOOR BOXES)

A. The valve Manufacturer shall supply and integrally mount all operators on valves at the factory. The valves and their individual operators shall be shipped as a unit.

B. Unless otherwise noted, valves shall be manually operated; non-buried valves shall have an operating wheel, handle or lever mounted on the operator; buried valves shall have a non-rising stem with an AWWA 2-inch nut.

C. Unless otherwise required by the Owner, all manual operating input shafts shall turn to the left (counter-clockwise) to open the valve.

D. Each operating device shall have cast on it the work (OPEN) and an arrow indicating the direction of operation.

E. Provide valve position indicator for buried valves. Valve box size shall be adequate to accommodate valve position indicator.

F. Floor boxes for operating nuts recessed in concrete floors shall be standard cast iron type, cast-in-place with fastening top by Clow or equal.

G. Chainwheel shall be supplied for all valves larger than 3-inch in diameter whose centerline is 5 ft. or more above the floor for operation of valve. Chainwheel shall be galvanized and chain shall loop within four feet of the floor. Chainwheel diameter shall match that of the handwheel.
   1. Acceptable Manufacturers:
      a. Babitt Steam Specialty, New Bedford, Massachusetts
      b. Roto Hammer Industries, Tulsa, Oklahoma

H. Unless otherwise noted, gear operators shall be provided for: All valves with operating shafts of larger than 8-inch nominal diameter (unless otherwise noted); for all buried valves with their operating shaft mounted horizontally (butterfly, plug, etc.); where specified and/or indicated on the Drawings; and where manual operator effort is greater than 40 ft-lbs. Gear operators shall normally be of the beveled type with output shaft perpendicular to valve shaft, having a removable hand wheel mounted on the output shaft. Gearing shall be machine-cut steel designed for smooth operator. Bearings shall be permanently lubricated, provided to take all thrusts and seals provided to contain lubricants. Housings shall be exclude moisture and dirt. Manual operator input effort to the hand wheel shall be a maximum of 40 ft-lbs. to operate the valve from full open to full close, under line pressure. Gear operators shall indicate valve position and have adjustable stops.

2.12 STRAINERS

A. "Y" Type Strainers:
   1. Manual strainers furnished for pipe diameters smaller than 2 inches in diameter shall be "Y" type, capable of removing solids 0.01 inches diameter and larger. The strainer body shall be of semi-steel construction for steel pipe, and brass or bronze for copper pipe and shall conform to ASTM A278, Class 30. Strainers on plastic pipe shall be of the same material as the pipe. Strainer elements, including woven wire mesh, shall be constructed of stainless steel.

2. Design of the strainer body shall be such that the clean-out plug and screw may be easily removed to permit inspection and cleaning without disassembly of inlet and outlet piping. End connections shall be ANSI screwed pipe threads.
3. Six spare screens shall be furnished for replacement of all "Y" type units at least once. Strainers shall be designed for a maximum operating pressure of 150 psig. They shall be as manufactured by GA Industries, Inc., or equal.

B. Manual Basket Strainers:
1. Manual basket strainers shall be furnished for pipe 2 inches in diameter and larger, as per the Drawings. Strainer body shall be of cast iron construction. Strainer elements shall be constructed of Type 304 stainless steel. Design of the basket strainer body shall be such that the bolted lid and basket may be easily removed for inspection and cleaning without disassembly of inlet and outlet piping.
2. A trap with a blow-off port shall be provided for removing any material that may settle at the bottom. Strainers shall be designed for a maximum operating pressure of 150 psig, and shall be 74-D as manufactured by GA Industries, Inc., or equal.
3. Proper blow off piping with valve shall be supplied, run to nearest drain.

C. PVC Duplex Basket Strainer:
1. Provide and install PVC duplex basket strainer as shown on drawings.
2. Strainer shall be of PVC construction, rated for a working pressure of up to 50 PSI. Baskets shall be removable without the need for tools.
3. Strainer shall be integrally fitted with PVC ball or butterfly valves to enable diversion of flow through either of the two baskets, while the other basket is isolated for cleaning. PVC ball valves shall be provided at each basket drain.
4. Strainer shall have two stainless steel baskets, each with 1/16” perforations, providing a minimum open area ratio of 4:1.
5. Bolt bases securely to floor using 316 stainless steel capsule anchors.
6. Strainer shall be as manufactured by Hayward Flow Control Systems, Eaton Filtration.

2.13 CORPORATION STOPS

A. Corporation stops shall be of bronze or brass, and shall be designed and manufactured in accordance with AWWA Standard C800, except as modified herein. Corporation stops shall have Mueller inlet threads, except that corporation stops for use with service clamps shall have IPS threads. Where corporation stops are used with plastic pipe, a brass companion flange shall be provided on the outlet of each corporation stop.

2.14 EMERGENCY SAFETY SHOWERS AND EYEWASH UNITS

A. Should other Specification sections or Drawings reference an alternate manufacturer / model or provide alternate requirements, the more stringent / costly shall be included in Contractor’s bid.

B. Furnish and install where shown on the Drawings. All assemblies shall be provided with stay-open ball valves. Provide eye wash with strainer on supply line. Units shall be complete with automatic flow control devices as required to limit emergency shower flow to 20 gpm and eye wash flow to 2.4 gpm. An emergency identification sign shall be included with each unit. Emergency safety shower and Eye Wash Assemblies shall be manufactured by

Haws, Guardian, Western, Bradley, or Speakman. All units shall be provided with a tepid water system.

C. Interior Emergency Shower/Eye Wash Unit (ESEW-A)
1. Furnish and install a combination emergency shower and eye wash unit where shown on the Drawings.
2. Units shall have a 10-in cycolac plastic shower head and eye wash bowl, stay open ball valves and hand and foot control for eye wash.
3. Units shall be complete with automatic flow control devices as required to limit emergency shower flow to 20 gpm and eye wash flow to 3 gpm.
4. Unit shall be equipped with a flow switch to provide a dry contact alarm signal when the unit is in use. The contact will be monitored by the plant SCADA system. Unit shall include strobe light and horn.
5. Unit shall be modified to include a 8-ft hand held recoil hose assembly with bracket for spray head and equal to Haws Model #8906, Guardian Model #G1716 or Bradley Model #S-19-600

D. Exterior Freeze-Proof Emergency Shower/Eye Wash Unit (ESEW-B)
1. Furnish and install where shown on the Drawings, a combination emergency shower and eye wash unit equipped with heating cable and insulation and designed to operate at temperatures as low as minus 40 degrees F.
2. Equipment shall include a ABS plastic shower head, stay-open ball valve, automatic volume control on both shower and eye wash, removable polyethylene foam insulation encased in ABS plastic jacket and a NEMA 4 enclosed thermostat. Shower flow shall be limited to 20 gpm. Eye wash shall include strainer, flow shall be 2.4 gpm.
3. Unit shall have integral purge valve that opens when water temperature falls below 45 Deg. F. The valve shall be located opposite the water supply connection and purge approximately 6 gpm to prevent freezing in case of power failure.
4. The unit shall be factory modified (special order) to include an additional 24-inch long section of heat trace wire exposed at piping inlet connection. Wrap heat trace wire around potable water supply from building. Insulate over heat trace and jacket outdoor exposed potable water piping.
5. Unit shall be equal to Haws Model #8317CTFP. Other acceptable manufacturers are Guardian and Bradley.

2.15 STAINLESS STEEL EXPANSION JOINTS

A. The expansion joints shall be OMNI-FLEX as manufactured by Victaulic, Incorporated. Unless noted otherwise all expansion joints shall be anchored with tie rods as recommended by the expansion joint Manufacturer, with no less than two rods each. Expansion joints shall be furnished for installation at the locations shown on the Drawings. Thermal expansion and contraction that will occur in the pipe resulting axial and/or lateral movement of the pipe shall be based on a maximum temperature variation of 250o degrees Fahrenheit. The expansion bellows shall be produced from fully annealed stainless steel stock rolled into a tube, seam welded and formed into corrugations. Ends of the expansion bellows shall be prepared for stainless steel plate flanges conforming to ANSI/AWWA dimensions welded directly to the integral ends of the stainless steel bellows.

2.16 RUBBER EXPANSION JOINTS

A. Expansion joints shall be single arch-type of butyl rubber construction with UV protection coating and carcass of high-grade woven cotton or suitable synthetic fiber and individual solid steel ring reinforcement. Soft rubber fillers shall be integrally cured into the arches to provide a smooth flow path to prevent settling of materials into the arch. Joints shall be constructed to pipe size and meet working pressure and corrosive conditions. Joints shall have full-faced fabric reinforced butyl flanges integral with the body. Split-type steel or ductile iron backup rings shall be provided to insure a good joint. Rings shall be designed for mating with ANSI 150 lb. flanges. Joints shall be finish coated with Hypalon or equal paint.

B. Expansion joints shall be furnished with control (harness) units. Harness units shall consist of minimum two drilled plates, stretcher bolts, and rubber washers backed by metal washers. Stretcher bolts shall prevent over-elongation of the joint. Extra nuts shall be provided on the stretcher bolts on the inside of the plate to prevent over compression. Retaining ring, nuts, bolts, and plates shall be 316L stainless steel.

C. Expansion joints shall be Style 1101 filled arch as manufactured by General Rubber Corp. or equal.

D. In addition to locations shown on the Drawings, expansion joints shall be utilized in exposed piping within one foot of a building expansion joint, and on the discharge side of non-piston pumps, compressors, and rotating machinery.

2.17 FLEXIBLE RUBBER CONNECTIONS

A. Manufacturers: One of the following or equal:
   1. Mercer Rubber Company, Type 150 Vibraflex.
   2. Red Valve Company, Inc., Part Number P-5.

B. Provide flexible rubber connections with 3/8 inch thick EPDM rubber tube with full- faced flanged ends suitable to withstand a pressure of 150 pounds per square inchgauge.

C. Provide complete flexible rubber connections, including galvanized retaining rings and control rods.

2.18 BELLOWS TYPE EXPANSION JOINTS

A. Expansion joints for general service:
   1. Expansion joints: Flexible bellows type with equalizing rings, or as otherwise specified or indicated on the Drawings.
   2. Manufacturers:
      a. Expansion joints: One of the following:
         1) Senior Flexonics Pathway, Inc., Controlled Flexing Expansion Joint.
         2) Flex-Weld, Inc., Keflex, Series 308.
         3) Victaulic Depend-o-Lok, Omniflex stainless bellows expansion joint.
      b. Pipe alignment guides: One of the following or equal:
         1) Senior Flexonics Pathway, Inc.

2) Flex-Weld, Inc.

c. Intermediate supports: Provide with protective saddles. One of the following or equal:
1) Unistrut Corporation, Roller-type.
2) Bergen-Paterson Pipe Support Corp.

3. Design:
a. Expansion joint rating: 150 pounds per square inch gauge, at 300 degrees Fahrenheit.
b. Bellows: Multi-ply stainless steel, equipped with a self-draining liner guide.
c. Axial travel of expansion joints: Not less than 1.50 inches.
d. Ends: 150 pound ASME flanges, Victaulic Depend-o-Lok Airmaster/Fluidmaster coupled ends, or plain suitable for welding connections, as required for piping in which installed.

B. Expansion joints for steam and hot water:
1. Manufacturers: One of the following:
a. Flex-Weld, Inc., Keflex, Series 308-1215.
b. Senior Flexonics Pathway, Inc., Controlled Flexing Expansion Joint.
c. Victaulic Depend-o-Lok Omniflex Expansion Joint.
2. Design:
a. Single reinforced bellows type or Victaulic mechanical couplings.
b. Pressure and temperature ratings: 150 pounds per square inch gauge,and 500 degrees Fahrenheit service.
c. Bellows: Multi-ply Type 321 stainless steel, equipped with a Type 321 stainless steel liner.
d. Axial travel of expansion joints: 3 inches minimum.
e. Ends: 150 pound ASME flanges.

C. Copper piping expansion joints:
1. Expansion joints for copper pipe: As specified before, except externally guided, without equalizing rings, and provide for 3-1/4 inch expansion per100 feet of piping.

D. Roof drain expansion joints:
1. Neoprene bellows between roof drain fitting and drain piping.
2. Up to 12-inch static head.
3. Complete with Type 316 stainless steel clamps.
4. Manufacturer: The following or equal:
a. Watts, Model RD-900.
b. Flexicraft Industries, DWV.

E. Stainless Steel Bellows for Aeration Air Service:
1. Manufacturers: One of the following or equal:
a. Hyspan.
b. Microflex.
2. Materials:
a. Bellows: Type 316L stainless steel.
b. Flow Liner: Type 316L stainless steel.
c. Flanges: Type 304 stainless steel.
3. Construction:
a. Laminated construction with a minimum of 2 plies.

b. Flow liners shall be provided on all joints.
c. End connections: fixed flange by fixed flange.
d. Provide shipping bars on all joints.

2.19 SLIP TYPE EXPANSION JOINTS

A. Expansion joints for steam cleaned piping:
1. Manufacturers: One of the following or equal:
a. BTR, Inc./Smith-Blair, Inc., Number 612 with slip pipe and without limit rods.
b. Dresser Industries, Inc., Style 63, Type 2.
2. Line and coat slip pipe and interior of body with fusion-bonded epoxy ofminimum 0.012-inch thickness.
3. Packing: Suitable for temperatures greater than 212 degrees Fahrenheit.

B. PVC expansion joints:
1. Flexible bellows type with equalizing rings.
2. Manufacturers: One of the following or equal:
a. Flo Control, Flo-Span.
b. Chemtrol.
3. Materials: PVC with EPDM O-ring.
4. Design:
a. 150 pound per square inch pressure rating.
b. Double O-ring seal.
c. Axial travel: Not less than 1.5 inches.
d. Ends: 150 pound ASME flanges, or plain end suitable for solvent welding connections.

2.20 RUBBER EXPANSION JOINTS

A. Manufacturers: One of the following or equal:
1. Mercer Rubber Company, Style 500 or 700.
2. Red Valve Company, Inc., Type J-1.

B. Provide rubber expansion joints complete with control units and split retaining rings.

C. Design:
1. Material: Neoprene rubber, reinforced with embedded steel rings, and a strong synthetic fabric.
2. Expansion rings, suitable for pressures of at least 125 pounds per square inch gauge, except as follows:
a. Expansion joints in pump suction piping and where indicated on the Drawings suitable for minimum 90 pounds per square inch gauge pressure, and minimum 30 inches mercury vacuum.
b. Split retaining rings, galvanized.
c. Ends of expansion joints, 150 pound ASME flanges with drilling to match that of the piping.

D. Rubber expansion joints for blowers and aeration air piping: EPDM type rubber formulated for service application and for maximum temperature of 250 degrees Fahrenheit, suitable

for minimum 40 pounds per square inch gauge pressure, andminimum 15 inches mercury vacuum.

1. Minimum axial expansion: 1/2 inch.
2. Minimum axial compression: 3/4 inch.
3. Minimum lateral deflection: 1/2 inch.
4. Minimum angular deflection: 5.5 degrees.

2.21 EXPANSION JOINTS FOR CHEMICAL SERVICES:

A. Manufacturers: One of the following or equal:
   1. Red Valve Company, Inc., Type T-205, Teflon Lined.
   2. Mercer, Teflon Lined, Series 700.

B. Provide Teflon-lined Hypalon or rubber expansion joints, reinforced with embeddedsteel rings, and a strong synthetic fabric. Teflon lined rubber expansion joints shall be required to have Teflon liner extend through the entire length of the joint and cover end flanges completely. Teflon-lined Hypalon expansion joints shall be required to have the Teflon liner extend through the entire length of the joint up intothe outer edge of the raised flanged faces.

C. Expansion rings, suitable for pressures of at least 125 pounds per square inchgauge.

D. Ends of expansion joints, ANSI flanges with drilling to match that of the piping. Flanges shall be ANSI-rated components suitable for a working pressure of 250 psi.

2.22 VIBRATION CONTROL JOINTS

A. Manufacturers:
   1. Braided bronze flexible vibration joints 2 inches and less in size: One of the following or equal:
      a. Senior Flexonics Canada, Inc., Type BRC bronze connectors.
      b. Flex-Weld, Inc., Keflex, Type KFCB.
   2. Flexible vibration joints larger than 2 inches: One of the following or equal:
      a. Senior Flexonics Canada, Inc., Type TCS.
      b. Flex-Weld, Inc., Keflex, Series 151-TR-1215.
   3. Corrugated stainless steel with stainless steel braid flexible vibration joints:One of the following or equal:
      a. Senior Flexonics Canada, Inc., Type BSFS stainless steel connectors.
      b. Flex-Weld, Inc., Keflex, Type USFNSS-31.

B. Design:
   1. Flexible vibration joints 2 inches and smaller: Braided bronze, suitable forpressures of not less than 250 pounds per square inch gauge.
   2. Flexible vibration joints larger than 2 inches: Flexible bellows type, suitable for pressures of not less than 150 pounds per square inch gauge, at 70 degrees Fahrenheit, except as follows:
      a. Provide vibration joints in piping subject to test pressures higher than 150 pounds per square inch gauge, suitable for such higher pressures.
      b. Bellows: Stainless steel, equipped with a stainless steel liner.
      c. Ends: ASME Class 150 flanges.

3. Vibration joints in high-pressure air piping and in digester gas piping: Corrugated Type 316 stainless steel with stainless steel braid, suitable forpressures of not less than 150 pounds per square inch gauge.
   a. Ends: ASME Class 150 flanges.

C. Protection: Protect vibration absorbers against end loading and torsional stresses by anchoring attached piping.

2.23 TRANSITION FITTINGS

A. Manufacturers: One of the following or equal:
   1. Spears.

B. Materials:
   1. Slip socket: Schedule 80 PVC.
   2. Collar: Type 316 stainless steel.
   3. Threaded insert: Type 316 stainless steel.

2.24 PIPE SADDLES

A. Manufacturers: One of the following or equal:
   1. BTR Inc./Smith-Blair, Inc., Style 317.
   2. Romac Industries, Inc., Style 202S.

B. Materials:
   1. Pipe saddles: Ductile iron.
   2. Straps, bolts, and nuts: Type 304 stainless steel with Teflon coating on nuts.
   3. Gaskets: EPDM.

2.25 SIGHT GLASSES

A. Assembly: Body casting with ASME standard adapter flanges, borosilicate Pyrex☐ glass section, cleaning assembly with scalloped neoprene wipers, operating rod and handle, packing gland with packing and suitable adapter, and cock with solvent hand pump.

B. Suitable for a minimum pressure of 30 pounds per square inch gauge.

C. Manufacturers: One of the following or equal:
   1. EIMCO Process Machinery Division of Envirotech Corporation.
   2. Ernst, Type K2 or K3 Cleanable Sight Glass.

2.26 SPRAY NOZZLES

A. Location:
   1. N/A

B. Design:
   1. Operating pressure 10 pounds per square inch gauge, at which pressure at each nozzle discharges not less than 3.5 gallons per minute, nor more than 5.0 gallons per minute.
      a. Spray: Flat, heavy sheet, fan with uniform distribution.

b. Fan width at the water surface not less than 6.5 feet at 10 pounds per square inch gauge.
c. Spray deflection with a replaceable deflector insert free to rotate away from the orifice opening and mechanically locked in place and counterweighted.

2. Spray nozzles structurally suitable for pressure up to 200 pounds per square inch gauge.
3. Nozzles, easy flush type.
4. Nozzles for primary clarifiers shall be mounted to the underside of the clarifier covers. Coordinate installation of these nozzles with the cover manufacturer and provide access to nozzles for maintenance and/or replacement. Coordinate with the cover manufacturer to provide adequate support of the spray nozzle system.

C. Materials:
1. Spray nozzles: Leaded bronze.
2. Nozzles provided with 1/4 inch national pipe thread, and the orifice diameternot less than 1/4 inch.
3. Replaceable spray deflector: Neoprene rubber.

2.27 FLANGE-MOUNTED MAGNETIC TYPE LEVEL INDICATOR

A. Manufacturers: The following or equal:
1. Gems Sensors, Sure Site Type BP.

B. Magnetic Level Indicators:
1. CPVC housing and CPVC float.
2. 2-inch flanged side mount connections.
3. Pipe caps top and bottom.
4. Colored magnetic flag indicators.
5. Rated 40 pounds per square inch/140 degrees Fahrenheit.
6. Ferric Tank: Indicating height of 12 feet.

2.28 CHEMICAL QUICK DISCONNECT COUPLINGS

A. Manufacturers: The following:
1. PT Coupling.
2. OPW Engineered Systems, Kamlok.
3. Alsco Industrial Products, Banjo Dry-Mate.

B. Metallic Hose Coupling:
1. Material, 316 Stainless Steel.
2. Female NPT threaded coupling.
3. Dust cap with twin cam arms.
4. Minimum pressure rating, 150 psi at 150 degrees F.

C. Non-Metallic Hose Coupling:
1. Material, Polypropylene.
2. Female NPT threaded coupling.
3. Dust cap with twin cam arms.
4. Minimum pressure rating, 50 psi at 150 degrees F.

D. Zero Leakage Hose Coupling:
   1. Material, Polypropylene.
   2. Assembly to include male and female fittings.
   3. Male and female fittings to have NPT threaded end.
   4. Fittings to have twin cam arms.
   5. Minimum pressure rating, 70 psi at 150 degrees F.

PART 3 EXECUTION

3.1 INSTALLATION

A. Items shall be installed per Manufacturer's instructions in the locations shown on Drawings. Contractor to thoroughly review instructions prior to installation.

B. Damage to items shall be repaired to the satisfaction of the Owner before they are installed.

C. Install brackets, extension rods, guides, the various types of operators and appurtenances as shown on the Drawings that are in masonry floors or walls, and install concrete inserts for hangers and supports as soon as forms are erected and before concrete is poured. Before setting items, check Drawings which have a direct bearing on their location to be responsible for the proper location of these appurtenances during construction of structures.

D. Items shall be carefully inspected for defects in construction and materials; debris and foreign material cleaned out of openings, etc.; operating mechanisms operated to check their proper functioning, and nuts and bolts checked for tightness. Equipment which does not operate easily, or is otherwise defective, shall be repaired or replaced.

E. Where installation is covered by a referenced Specification, installation shall be in accordance with that Specification, except as herein modified.

F. Unless otherwise noted, joints for items shall be made up utilizing the same procedures as specified under the applicable type connecting pipe joint.

3.2 INSTALLATION OF SLEEVE (DRESSER) TYPE COUPLINGS

A. Unless otherwise required by the Manufacturer's instructions, prior to installation of sleeve-type couplings, pipe ends shall be cleaned thoroughly for a distance of at least 12 inches. Soapy water may be used as a gasket lubricant. A follower and gasket, in that order, shall be slipped over each pipe to a distance of about 6 inches from the end; the middle ring shall be placed on the already installed pipe and shall be inserted into the middle ring flair and brought to proper position in relation to the pipe already laid. The gaskets and followers shall then be pressed evenly and firmly into the middle ring flares.

B. After the bolts have been inserted and nuts have been made up finger tight, diametrically opposite nuts shall be progressively and uniformly tightened around the joint, by use of a torque wrench of the appropriate size and torque for the bolts.

C. The correct torque as indicated by a torque wrench shall not exceed 75 ft-lb for 5/8- inch bolts and 90 ft-lb for 3/4-inch bolts.

D. If a wrench other than a torque wrench is used, it should be no longer than 12 inches so that when used by the average person the above torque values shall not be exceeded.

E. To prevent sleeve-type couplings from pulling apart under pressure, a suitable harnessing or flange clamp assembly shall be provided and installed.

F. The additional locations required for sleeve couplings per Part 2 of this Section shall be provided.

3.3 FLANGED COUPLINGS ADAPTERS

A. Flanged coupling adapters shall be installed in strict accordance with the coupling Manufacturer's recommendations. After the pipe is in place and bolted tight, the proper locations of holes for the anchor studs shall be determined and the pipe shall be field-filled. Holes for anchor studs shall be drilled completely through the wall pipe. Hole diameter shall not be more than 1/8-inch larger than the diameter of the stud projection.

3.4 INSTALLATION OF WALL AND FLOOR FITTINGS

A. Wall pipes and pipe sleeves embedded in concrete walls, floors, and slabs shall be embedded as shown. Support all pipes embedded in concrete walls, floors, and slabs with form work to prevent contact with the reinforcing steel.

3.5 EXPANSION CONTROL JOINTS

A. Install bellows type expansion control joints at piping connections to mechanical equipment to prevent damaging stresses due to normal expansionand contraction with temperature changes in piping and connected equipment.

B. Install bellows type expansion joints so as to allow 2-1/4 inch expansion per100 linear feet of piping.

C. Install expansion joints adjacent to an anchor, and provide 1 concentric guideon piping within 12 pipe diameters, but not more than 5 feet, from the end of the joint opposite the anchor.
   1. Locate a similar guide approximately 30 diameters but not more than10 feet from the first.

D. For expansion joints not installed adjacent to an anchor provide 2 concentricguides similarly located at each end of the joint.

E. Provide control rods and additional guides where indicated on the Drawings,but at no greater intervals than recommended by the joint manufacturer in published instructions.

F. Space intermediate supports a minimum of 10 feet, and tack weld theprotective saddles to the pipe.

3.6 VIBRATION CONTROL JOINTS

A. Install vibration control joints at piping connections to or from mechanical equipment to prevent transmitting equipment vibration through the pipingsystem.

3.7 TRANSITION COUPLINGS

A. Application:
   1. Use transition couplings with function and design similar to flexible couplings and flanged coupling adapters for connecting piping havingdifferent outside diameters.

B. Install transition-coupling products specifically designed and manufactured for that application.

3.8 PIPE SADDLES

A. Coat threads on bolts with anti-gall coating prior to installation.

3.9 TAPPING SLEEVES

A. Verify existing pipe material and outer diameter prior to ordering materials.

B. Large diameter pipe:
   1. Verify the existence of lining material.
   2. Verify lining material type.
   3. Repair lining after hot tap operations are complete with similar lining orequal.
   4. Demonstrate ability to accomplish hot tap by staging a dry run simulationof the procedure prior to the initiation of the hot tap procedure.
      a. Walk through each step of the hot tap installation, and show the Engineer every component needed to install the hot tap, including butnot limited to, tools and materials, to ensure that all the required components are on-site and in place prior to beginning the procedure.

C. Coat threads on bolts with anti-gall coating prior to installation.

3.10 SPRAY NOZZLES

A. Install spray nozzles so that elevation of the nozzles is 18 inches above thewater surface.

END OF SECTION

SECTION 40_05_19.20

DUCTILE IRON PIPE & FITTINGS

PART 1 GENERAL

1.1 SCOPE OF WORK

A. Furnish labor, materials, equipment and incidentals necessary to install ductile iron pipe and fittings, including taps, connections, and appurtenances as required for a functional system as indicated herein. Unless otherwise noted, all above grade exposed pipe, fittings, and appurtenances shall be flanged while below grade piping, fittings and appurtenances shall be mechanical joint, or push-on restrained joint. No unrestrained push-on joint piping will be permitting.

B. At all points underground where piping exits structures and transitions to natural ground or other areas subject to ground settling or other potential introduced stresses after installation, a bell-flange wall pipe w/ seep ring and restrained mechanical joint shall be provided. Drawings may/may not reflect (and it may be drawn/called as flanged fitting in locations.)

C. Components/systems/miscellaneous items contained in this specification may or may not be specifically indicated, detailed or called out on the Drawings. Regardless, provide in accordance with this specification with shall govern Drawings unless specifically indicated. Notify Engineer prior to bid for additional clarification where needed.

D. ALL push on ductile iron pipe shall be restrained joint.

E. All iron and steel products used in this project for the construction, alteration, maintenance or repair of a public water system or water treatment plant shall be produced in the United States in accordance with the Consolidated Appropriation Act of 2014. Such products include lined or unlined pipes and fittings, manhole covers and other municipal castings, hydrants, tanks, flanges, pipe clamps and restraints, valves, structural steel, reinforced precast concrete and construction materials.

1.2 RELATED WORK

A. Section 01_00_01 Basic Requirements

B. Section 01_33_01 General Submittal Requirements

C. Section 40_05_12 Piping Specialties.

D. The Contract Documents are a complete unit and complementary to each other. The individual Specification sections and other Contract Documents do not contain all cross references to "related work" or "related sections." It is the Contractor's responsibility to review the complete Contract Documents in order to properly scope, schedule and coordinate the work of any/all subcontractors, suppliers, and others on this project. Anything called out in one location of the Contract Documents is binding as if it were called out in all sections of the Contract Documents.

1.3 SUBMITTALS

A. Submit in accordance with Section 01_33_01 General Submittal Requirements

1.4 REFERENCE STANDARDS

A. American Water Works Association (AWWA) Standards:
1. AWWA C104 Standard for Cement Mortar Lining for Ductile Iron Pipe and Fittings
2. AWWA C105 Standard for Polyethylene Encasement for Ductile Iron Piping
3. AWWA C110 Standard for Ductile Iron and Gray Iron Fittings
4. AWWA C111 Standard for Rubber Gasket Joints for Ductile Iron Pipe and Fittings
5. AWWA C150 Standard for Thickness Design of Ductile Iron Pipe
6. AWWA C151 Standard for Ductile Iron Pipe
7. AWWA C153 Standard for Ductile-Iron Compact Fittings for Water Service
8. AWWA C600 Standard for Installation of Ductile Iron Water Mains and Appurtenances
9. AWWA C606 Grooved and Shouldered Joints

B. Steel Structures Painting Council (SSPC) Standard: SSPC SP6, Commercial Blast Cleaning.

C. All ductile iron pipe and fittings for potable water systems shall conform to American National Standards/National Science Foundation (ANSI/NSF) Standard 61 and must be certified by an organization accredited by ANSI. Ductile iron pipe must be registered with National Sanitation Foundation (NSF) as having been certified to meet NSF/ANSI Standard 61.

1.5 QUALITY ASSURANCE

A. Factory Testing: The manufacturer shall perform all tests as required by AWWA C151 to include a hydrostatic test of 500 psi for no less than 5 seconds.

B. Experience Requirements: Pipe shall be the product of a manufacturer who has a minimum of 10 years' successful experience manufacturing pipe of the particular type specified and the total pipeline shall be the product of one pipe manufacturer. The manufacturer shall have a minimum of 10 years' successful experience in the design and manufacturing of pipe joints of similar design, working pressure, pipe diameter and wall thickness as specified.

C. Pipe Classification: Pipe manufacturer shall manufacture the pipe to meet the installation conditions, cover depth, and bedding and backfill requirements as shown on the Drawings or specified and furnish the correct class of pipe to meet these conditions. If additional requirements are required based on recommended lay condition, depth, etc, pipe manufacturer shall coordinate their requirements with the Contractor prior to bid.

D. All grooved couplings, fittings, valves, and specialties shall be the products of a single manufacturer. Grooving tools shall be of the same manufacturer as the grooved components.

1. All castings used for couplings housings, fittings, or valve and specialty bodies shall be date stamped for quality assurance and traceability.

1.6 SYSTEM DESCRIPTION/DESIGN REQUIREMENTS

A. Exposed pipe shall be flanged unless noted otherwise. Exposed fittings for use with flanged joints on ductile pipe shall be cast iron or ductile iron fittings conforming to ANSI B16.1 or AWWA C110. Flanges shall be faced and drilled in accordance with ANSI B16.1, Class 125. All fittings shall be pressure rated at 250 psig. Buried fittings shall be restrained mechanical joints unless otherwise noted.

B. All above grade pipe shall be flanged unless noted otherwise. Flanges for ductile or cast iron pipe shall be ductile or cast iron flanges screwed on threaded ends of the pipe. Flanges shall conform to ANSI B16.1, Class 125. Screwed-on flanges shall be attached to the pipe in the shop; attachment, aligning and facing shall conform to AWWA C115.

1. AWWA C606 compliant Victaulic grooved joint couplings and fittings may be used on applicable piping systems in lieu of flanged joints at the Contractor's option.

C. Mechanical joints shall only be used on buried pipe or where specifically noted on the drawings for exposed pipe. Mechanical joints for use with ductile iron pipe shall conform to AWWA C111 and shall be restrained.

D. Seal strips, where required on the Drawings shall be link seal as manufactured by Thunderline Corporation, Wayne, Michigan, or equal.

E. All buried ductile iron pipe and fittings shall be protected in accordance with ANSI/AWWA C105/A21.5 "Polyethylene encasement for gray and ductile iron pipe for water and other liquids.

F. Provide restrained joints on all buried piping.

1.7 DELIVERY, HANDLING AND STORAGE

A. Storage and Handling Requirements
1. Ductile Iron Pipe shall be stored and handled in accordance with the guidelines asstated in AWWA M41.

PART 2 PRODUCTS

2.1 MATERIALS

A. Manufacturers
1. Pipe
a. American Cast Iron Pipe Company,
b. U. S. Pipe,
c. or engineer approved equal.
2. Fittings
a. American Cast Iron Pipe Company,
b. U. S. Pipe,

c. Tyler Union
d. Star Pipe Products
e. SIGMA Corporation
f. Victaulic Company
g. or engineer approved equal.

B. Ductile Iron Pipe:

1. Ductile iron pipe shall be made of ductile iron in accordance with AWWA C151. All ductile iron pipe shall have a minimum working pressure as indicated on the Drawings. Pipe shall be rated for pressure in accordance with AWWA C151 for pressure class of pipe as indicated. Standard joint length shall be 18 to 20 feet. Flanged ductile iron pipe shall be in accordance with AWWA C115.
   a. Use thickness Class 53 for interior and flanged pipe.
   b. Use thickness Class 53 or greater for grooved AWWA C606 pipe.
   c. Use thickness Class 52 for other applications.
2. Pipe manufacturer shall manufacture the pipe to meet the installation conditions, cover depth, and bedding and backfill requirements as shown on the Drawings or specified and furnish the correct class of pipe to meet these conditions.
3. The raw material for ductile iron shall have an average minimum content consisting of 90% recycled iron and steel. Ductile iron pipe shall be manufactured in the USA in accordance with ANSI/AWWA C151/A21.51.
4. All pipe shall meet the requirements of NSF 61.
5. Pipe shall have a lay length of 18 feet or 20 feet except for special fittings orclosure pieces necessary to comply with the Drawings.
6. As a minimum the following pressures classes apply. The Drawings may specify a higher-pressure class or the pressure and deflection design criteria may also requirea higher-pressure class. Pipe supplier shall verify/certify bury depth and any/all special requirements prior to bidding and recommend higher pressure class if deemed necessary based on lay conditions and pipe standards. In no case should they be less than the following:

Diameter (inches)	Min Pressure Class (psi)
3 through 12	350
14 through 20	250
24	200
30 through 64	150

7. Pipe markings shall meet the minimum requirements of AWWA/ANSIC151/A21.51. Minimum pipe markings shall be as follows:
   a. "DI" or "Ductile" shall be clearly labeled on each pipe
   b. Weight, pressure class and nominal thickness of each pipe
   c. Year and country pipe was cast
   d. Manufacturer's mark
8. Pressure and Deflection Design:
   a. Pipe design shall be based on trench conditions and design pressure class specified in the Drawings.
   b. Pipe supplier shall verify/certify bury depth and any/all special requirements prior to bidding and recommend higher pressure class if deemed necessary based on lay conditions and pipe standards.

c. Pipe shall be designed according to the methods indicated in AWWA/ANSI C150/A21.50, AWWA/ANSI C151/A21.51, and AWWA M41 for trench construction, using the following parameters:
   1) Unit Weight of Fill (w) = 130 pcf
   2) Live Load = AASHTO HS 20
   3) Trench Depth = As indicated in Drawings
   4) Bedding Conditions = As indicated in Drawings
   5) Working Pressure, Surge Pressure, and Test Pressure shall be as shown onthe Drawings.
   6) Design Internal Pressure (P_i) = P_w + P_s or 2:1 safety factor of the actualworking pressure plus the actual surge pressure, whichever is greater.
   7) Maximum Calculated Deflection (D_x) = 3 percent
   8) Restrained Joint Safety Factor (S_f) = 1.5

d. Trench depths shall be verified after existing utilities are located.
   1) Vertical alignment changes required because of existing utility or other conflicts shall be accommodated by an appropriate change in pipe designdepth.
   2) In no case shall pipe be installed deeper than its design allows.

C. Fittings:
1. Fittings shall be ASTM A536 ductile iron or ASTM A48 cast iron in accordance with C153
2. Fittings for grooved piping systems shall be ASTM A536 ductile iron or ASTM A48 cast iron. Fittings shall conform to ANSI A21.10 / AWWA C110 for center-to-end dimensions; and AWWA C153 or ANSI A21.10 / AWWA C110 for wall thickness. Basis of Design: Victaulic Company AWWA Fittings.
3. Fittings shall be rated for a minimum working pressure of 250 psi, unless specified otherwise.
4. Factory welded outlets may be used in lieu of tee fittings for 18-inch and larger tee fittings. Factory welded outlets shall have a minimum pressure rating of 250 psi. Factory welded outlets may not be used near sources of vibration, such as pump stations or roads.
5. All fittings for potable water service shall meet the requirements of NSF 61

D. Joints for Pipe and Fittings:
1. Joints shall be in accordance with AWWA C110, AWWA C111, and AWWA C151. Standard joints for ductile iron pipe and fittings shall be push-on, restrained. Where indicated, joints shall be mechanical joint, flanged, or grooved.
2. Flanged joints shall have pressure ratings equal to or greater than adjacent pipe. Flange pattern shall match pattern of valve, fitting, or appurtenance to be attached. Flanges on ductile iron pipe shall be ductile iron.
3. Field fabricated flanges are prohibited.
   1) The retainer gland shall have the following working pressure ratings basedon size and type of pipe:
      a) Ductile Iron Pipe
         (1) 3-inch – 16-inch, 350 psi
         (2) 18-inch – 48-inch, 250 psi
      b) Ratings are for water pressure and must include a minimum safetyfactor of 2 to 1 in all sizes

2) Retainer glands shall have specific designs for Ductile Iron and PVC and itshould be easy to differentiate between the 2.
3) Gland body, wedges and wedge actuating components shall be cast fromgrade 65-45-12 ductile iron material in accordance with ASTM A536.
4) Mechanical joint restraint shall require conventional tools and installation procedures per AWWA C600, while retaining full mechanical joint deflection during assembly as well as allowing joint deflection after assembly.
5) Proper actuation of the gripping wedges shall be ensured with torquelimiting twist off nuts.

4. Grooved Joint Couplings:
   a. Joints shall be in accordance with AWWA C606.
   b. Couplings with Class 53 or higher pipe rated to:
      1) 3" through 12": 350 psig.
      2) 14" through 18": 250 psig.
      3) 20" through 36" 150 psig.
   c. Couplings consist of two or more ASTM A536 ductile iron housing segments, a FlushSeal® elastomer pressure responsive gasket, and [ASTM A449 compliant electroplated steel] [ASTM F583/F594 stainless steel] bolts and nuts.
   d. Basis of Design: Victaulic Style 31.
      1) For direct connection between IPS / steel pipe and AWWA / ductile iron pipe, Victaulic Style 307 transition coupling.

E. Provisions for Thrust
1. Thrust at bends, tees, plugs, or other fittings shall be resisted by restrained joints. If thrust cannot be accommodated using restrained joints, thrust blocking or concrete anchors to restrain thrust may be used on a case-by-case basis when approved by the Engineer. See Drawings for blocking information.
2. For the purpose of thrust restraint, design pressure shall be 1.5 times the design working pressure class indicated.
   a. No thrust restraint contribution shall be allowed for the restrained length ofpipe within the casing.
   b. For the purpose of thrust, the following shall apply:
      1) Valves shall be calculated as dead ends.
      2) Design pressure shall be the test pressure or 1.5 times the working pressure,whichever is higher.
      3) Restrained joints shall consist of mechanical restrained or push-onrestrained joints approved by the Engineer.
   c. The Pipe Manufacturer shall verify the length of pipe with restrained joints to resist thrust in accordance with the Drawings, AWWA M41, and the following:
      1) The weight of earth (W_e) shall be calculated as the weight of the projected soil prism above the pipe, for unsaturated soil conditions.
      2) Soil density = 130 pcf (maximum value to be used), for unsaturated soilconditions
      3) If indicated on the Drawings and the Geotechnical Borings that groundwater is expected, account for reduced soil density.

3. The length of pipe with restrained joints to resist thrust forces shall be determined by the design engineer in accordance with Thrust Restraint Design for Ductile Iron Pipe, Ductile Iron Pipe Research Association using the following parameters:
   a. Laying condition is dependent on design. For 14" and large pipe, consideration should be given to the use of laying conditions other than Type 1.
   b. If polyethylene encasement is used, ensure the encasement is accounted for when determining restrained joint length.
4. Where indicated and where required for thrust restraint, joints shall be restrained. Restrained joints shall be mechanically interlocking joints. Restrained joints shall be HDSS®, TR FLEX®, or HP LOK® by U.S. Pipe only or engineer approved equal. Restraining fittings using set screws, restraining gaskets, gripper type glands, and field-cuts of restrained joints shall be Mega-Lug, or approved equal. Field welding shall not be allowed. Restrained joints shall be capable of sustaining the design pressure as specified herein.
   a. Note: TR FLEX is de-rated by 100 psi in 30" – 36" meaning a CL350 provides a 250 psi rating.
   b. Field cuts require gauged full-length pieces and must be measured prior to any cut by contractor.
5. Field LOK 350 Gasket may be used in 4" – 24" in order to restrain push-on joint piping.

F. Coatings:
1. Buried Ductile Iron Pipe: Coat the exterior of the pipe and fittings with a 1 mil bituminous coating in accordance with AWWA C110 and AWWA C151, unless specified otherwise.
2. Above Ground (immersion or non-immersion): Universal moisture-cured Urethane or MC-FerroClad (NSF-61 certified coatings where NSF-61 compliance is required.) Shop coat thickness: 3.0-5.0 mils dry film thickness
   a. Typical topcoats include: Alkyds, aluminums, epoxies (amine, polyamide, polyamidoamine, water-borne, and coal tar), and urethanes. Submittal required.
3. If other specifications sections conflict with the above the more restrictive / expensive shall govern.

G. Polyethylene Encasement:
   a. All buried Ductile Iron Pipe and Fittings shall be polyethylene encased.
   b. Use only virgin polyethylene material.
   c. Encasement for buried pipe shall be 8 mil, consisting of three layers of linearlow-density polyethylene (LLDPE) polyethylene encasement, infused with anti-microbial biocide.
      1) Encasement shall conform to AWWA/ANSI C105/A21.5.
      2) Encasement shall be V-Bio or approved equal.
   d. Marking: At a minimum of every 2 feet along its length, the mark the polyethylene film with the following information:
      1) Manufacturer's name or trademark
      2) Year of manufacturer
      3) AWWA/ANSI C105/A21.5
      4) Minimum film thickness and material type
      5) Applicable range of nominal diameter sizes
      6) Warning – Corrosion Protection – Repair Any Damage

e. Minimum widths shall be according to AWWA C105.

H. Lining (Potable Water): Ductile iron pipe and fittings [except air piping] shall have a cement mortar lining in accordance with AWWA C104 and bituminous seal coat. Thickness of lining shall be as specified in AWWA C104.

I. Lining (Air Piping): Air piping shall not be lined.

J. Lining (Sewer): Ductile iron pipe and fittings shall be lined with factory installed Protecto 401 Ceramic Epoxy Lining by Induron or an approved equal. Lining primers, applications, and thicknesses shall be in accordance with manufacturer's recommendations for sanitary sewer applications but shall not be less than 40 mils.

K. Gaskets: Gaskets for air piping, fittings, valves, etc. shall be high temperature resistant type, suitable for a temperature of 300 F or higher if required by the equipment and/or service application. Supplier to coordinate with engineer and/or equipment supplier.

L. Insulated Connections: Where insulated connections are indicated, the pipe manufacturer shall furnish dielectric insulation gaskets, sleeves, and two plastic washers for each bolt. Insulating kits shall be Insulket or approved equal.

M. Bonding Wires and Welding Cartridges: Bonding wire and thermite welding cartridges shall be furnished by the pipe manufacturer. Bonding wires shall consist of two insulated No. 4 copper wires.

2.2 ACCESSORIES

A. See 40_05_12 Piping Specialties.

B. Regulatory Requirements
1. All fasteners, excluding T-Bolts, shall conform to the Fastener Quality Act (FQA) (P.L. 106-34). All fasteners shall meet the marking requirements set forth by this Act.

C. T-Bolts and Nuts
1. Standard T-bolt and Nut
a. High strength, corrosion-resistant, low-carbon weathering steel in accordancewith AWWA/ANSI C111/A21.11 and ASTM A242

D. Flange Bolts and Nuts
1. Stainless Steel Bolt and Nut
a. Meet requirements of AWWA C207
b. Bolts: ASTM A193, Grade B8M, Class 1(AISI 316 Stainless Steel, carbide solution treated)
c. Nuts and Washers: ASTM A194, Grade 8 Nuts with AISI 316 Stainless Steel Washers
1) Coat nut.

E. Threaded Rods
1. Meet requirements of AWWA/ANSI C115/A21.15

2. Rods: ASTM A193, Grade B8, Class 1(AISI 316 Stainless Steel, carbide solution treated)
3. Nuts and Washers: ASTM A194, Grade 8 Nuts with AISI 316 Stainless SteelWashers
   a. Coat nut.

~~F. Petrolatum Tape System shall be as specified in Section 33 04 10 – Cathodic Protection Systems (if included or outlined in Drawings.)~~

G. Gaskets
1. General
   a. Gaskets for Ductile Iron Piping
      1) Suitable for pressures equal to and less than 150 pounds per square inch gauge, temperatures equal to and less than 250 degrees Fahrenheit, and raw sewage service.
      2) Materials
         a) Neoprene elastomer with minimum Shore A hardness value of70.
         b) Reinforcement: Inserted 13 ounce nylon fabric cloth for pipes 20-inch or larger.
         c) Thickness: Minimum 3/32 inch thick for less than 10 inch pipe; minimum 1/8 inch thick for 10 inch and larger pipe
         d) Manufacturers: One of the following or approved equal:
            (1) Garlock,
            (2) John Crane, or approved equal
   b. Gaskets for Flanged Joints in Air Piping:
      1) Suitable for pressures equal ad less than 150 pounds per square inch gauge, temperatures equal and less than 300 degrees Fahrenheit, and compressed air service.
      2) Material: EPDM elastomer, 1/8 inch thick, 60 Shore hardness, smooth surface.
      3) Manufacturers: one of the following or equal.
         a) Garlock,
         b) John Crane, or approved equal
   c. Gaskets for Grooved Joints:
      1) Molded and produced by the coupling manufacturer.
      2) Pressure responsive FlushSeal® gasket.
      3) Elastomer grade to suit intended service:
         a) Grade "M" Halogenated Butyl.
         b) Grade "S" Nitrile.
      4) Manufacturer: Victaulic Company.

2. Push-on Gaskets
   a. Conforming to the physical and marking requirements specified in ANSI/AWWA C111/A21.11.
   b. All gaskets shall meet or exceed the latest revisions NSF 61.
   c. Gaskets shall be free from porous areas, foreign material and other defects thatmake them unfit for intended use.
   d. Gaskets shall be the size and shape required to provide an adequate compressive force against the plain end and socket after assembly to affect apositive seal under all combinations of joint and gasket tolerances.
3. Mechanical Joint Gaskets

a. Conforming to the physical and marking requirements specified in ANSI/AWWA C111/A21.11.
b. All gaskets shall meet or exceed the latest revisions NSF 61.
c. Gaskets shall be free from porous areas, foreign material and other defects thatmake them unfit for intended use.

4. Flange Gaskets
   a. Full face
   b. Virgin stock
   c. Conforming to the physical and test requirements specified in AWWA/ANSI C111/A21.11
   d. All gaskets shall meet or exceed the latest revisions NSF 61.
   e. Finished gaskets shall have holes punched by the manufacturer and shall matchthe flange pattern in every respect.
   f. Frayed cut edges are not acceptable.
   g. Field cut sheet gaskets are not acceptable.
5. Isolation Flange Gaskets
   ~~a. Provide in accordance with Section 33 04 10 – Cathodic Protection Systems.~~

PART 3 EXECUTION

3.1 HANDLING

A. Pipe, fittings and accessories shall be handled in a manner that will insure installation in sound, undamaged condition.

B. Pipe and fittings with cement mortar or glass lining shall be handled with rubber covered hooks or other type of equipment to prevent damage to the cement lining.

C. Bare forklift arms, hooks, or chains shall not be inserted into open ends.

D. Pipe and fittings in which the lining has been damaged shall be immediately removed from the job site and replaced.

3.2 STORAGE

A. All pipe and fittings shall be stored off the ground.

B. Pipe ends shall be covered to prevent foreign matter from entering the pipe during storage.

C. Pipe shall be stacked using suitable lumber between rows to prevent damage to pipe.

D. Any pipe that becomes damaged or unidentifiable due to improper storage shall be rejected and immediately removed from the job site.

3.3 CUTTING PIPE

A. Cutting of pipe shall be done in a neat manner, without damage to the pipe or the lining.

B. Cuts shall be smooth, straight, and at right angles to the pipe axis.

C. Pipe shall be cut using a portable guillotine saw, abrasive wheel "cut-off ' saw, or milling cutter only. Use of gas torches for cutting pipe will not be permitted.

D. Field cut holes for saddles shall be with mechanical cutters. Gas torch cutting will not be permitted.

E. After cutting, the end of the pipe shall be dressed with a file or power grinder to remove all roughness and sharp edges.

3.4 CLEANING

A. The interior of all pipe and fittings shall be thoroughly cleaned of all foreign matter prior to installation, and shall be kept clean until the work has been accepted.

B. Before jointing, all joint contact surfaces shall be wire brushed, wiped clean, and kept clean until jointing is completed.

C. Flange faces shall be wire brushed and cleaned to remove all oil, grease, loose primer, mill scale or any other foreign matter which could effect the proper seating of the gasket.

D. When pipe installation is stopped, precautions shall be taken to prevent foreign material from entering the pipe.

E. Prior to testing, the entire pipeline shall be flushed until the flushing water runs clear and clean.

F. Cleaning for final acceptance shall be in conformance with Contract requirements.

3.5 INSTALLATION

A. General: Install ductile iron pipe, fittings, specials, valves, and hydrants in accordance with AWWA C600 and the Specifications. Before lowering into the trench, inspect each joint of pipe. Pipe will then be accepted, rejected, or repaired.

B. Lower pipe, fittings, and special castings into trench by crane or other suitable method. Do not roll in or "dump" into the trench. Handle pipe and fittings with belts, slings, or other equipment designed to prevent damage to the pipe and coating. Remove dirt and trash that may be in the barrel of the pipe, on the spigot or in the bell while the pipe is suspended. Keep the pipe clean during the laying operation and free of sticks, dirt, and trash, and at the close of each operating day seal the open end of the pipe with a gasketed night cap.

C. For buried piping a firm, even bearing throughout the length of the pipe shall be constructed by tamping selected material at the sides of the pipe up to the springline.

D. Buried pipe shall be protected from lateral displacement by use of the specified pipe embedment and/or encasement.

E. Under no circumstance shall pipe be laid in water.

F. All pipe will be laid on native material unless otherwise indicated on the contract drawings.

G. All pipe subgrade shall be compacted to 95% of maximum density per ASTM Standards unless otherwise indicated on the contract drawings.

H. All subgrade shall have compaction tests taken and be approved by the inspector prior to pipe installation.

I. When pipe laying is interrupted, or stopped at the end of the work shift, the open ends of pipe shall be sealed with a watertight plug, or other means acceptable to the engineer, to prevent water from entering the pipe.

J. Pipe Alignment: Install pipe and fittings to the line and grade indicated. In areas where the line and grade indicated cannot be achieved using standard manufactured bends and fittings, make slight adjustments by deflecting joints. Joint deflections may not exceed the lesser of the maximum deflections stipulated in AWWA C600 or 75 percent of the manufacturer's maximum recommended deflection. Use fittings as required to maintain pipe centerline within 2 feet of called centerline. Resolve any conflicts with existing utilities and structures.

K. Joint Making:
   1. Jointing Mechanical Joint Pipe:
      a. Joint this type of pipe in accordance with the manufacturer's recommendations, with uniform torque on bolts.
      b. After carefully cleaning both spigot and bell and after slipping the follower ring and gasket over the spigot end, slip the spigot into the bell. Apply a lubricant to the spigot to assist in assembly.
      c. Carefully seat the gaskets by hand to be even in the bell at all points.
      d. After drawing up the follower ring to uniform bearing against the gasket, insert the bolts and tighten by hand in pairs using bolts opposite each other.
      e. Tighten the nuts to hold the required pressure. Extension wrenches or pipes over wrench handles shall not be permitted. Use 10-inch ratchet wrenches to tighten the nuts to a uniform torque.
      f. The finished joint shall be watertight.
      g. Bolts shall be uniformly tightened to the torque values listed in Appendix A of ANSI/AWWA C111/A21.11.
      h. Over tightening of bolts to compensate for poor installation will not be permitted.
      i. Holes in mechanical joints with tie rods shall be carefully aligned to permit installation of the tie rods.
      j. In flange and mechanical joint pieces, holes in the mechanical joint bells and the flanges shall straddle the top (or side for vertical piping) centerline. The top centerline shall be marked on each flange and mechanical joint piece at the foundry.
   2. Making Flanged Joints:
      a. Erect flanged pipe in accordance with the controlling dimension as specified.
      b. Thoroughly clean each piece of flanged pipe to remove dirt, rust, grease, and other foreign matter.
      c. Thoroughly wire brush flanged faces to ensure even bearing for gaskets and mating flanges.

d. Place full face gasket, use drift pins to align holes, and tighten flange bolts, each in turn, at a uniform torque around the joint.
e. Finished joints shall be watertight.
f. When specified or indicated on the contract drawings, flanges shall conform to ANSI Bl 6. l, B16.2, and B21.10.
g. Bolts shall be tightened gradually and at a uniform rate to facilitate uniform gasket compression.
h. Care shall be taken when connecting to pumping equipment to ensure that pipe stresses are not transmitted to the pump flanges.
i. All flanged piping connecting to pumping equipment shall be permanently supported so that accurate matching of bolt holes and uniform contact over the entire surface of abutting pump and piping flanges are obtained before the installation of any bolts in these flanges.
j. Pump connection piping shall be free to move parallel to its longitudinal centerline while the bolts are being tightened.
k. Each pump shall be leveled, aligned, and placed into position, but shall not be grouted until the initial fit-up
l. and alignment of the pipe is completed.
m. Each pump shall be grouted before final bolting of the connecting piping.

3. Making Push-On Joints:
   a. The jointing of this type of joint shall be as recommended by the manufacturer. The procedure for jointing shall be generally as follows:
      1) Thoroughly clean and dry the spigot and bell before starting the assembly of the joint. Wipe the gasket clean with a cloth and ensure gasket is kept at a temperature of at least 40 degrees F.
      2) Place the gasket into the gasket seat in the bell.
      3) Apply a thin film of lubricant to the surface of the gasket that will come in contact with the entering pipe spigot. If necessary, also apply lubricant to the spigot.
      4) Make the joint by exerting sufficient force on the entering pipe so that its plain end will move past the gasket to the seat of the bell.
      5) If restrained joints are used, orient pipe to permit ease of assembly. Place locking device after installation of spigot into bell.
4. Making Grooved Joints:
   a. Grooved joints shall be fabricated and installed per AWWA C606.
   b. Grooved ends shall be clean and free from indentations, projections and roll marks in the area from pipe end to groove.
   c. Gaskets used with grooved joints shall be verified as suitable for the intended service.
   d. Install all grooved joint products in accordance with the manufacturer's latest installation instructions.
   e. The grooved coupling manufacturer's factory trained field representative shall provide on-site training for contractor's field personnel in the proper installation of grooved piping products. The representative shall periodically visit the jobsite to ensure best practices in grooved product installation are being followed. Contractor shall remove and replace any improperly installed products.
5. Making Split-Sleeve Coupling Joints:
   a. Exterior surfaces of the pipe shall be clean, smooth and free from weld beads, seams, scars, indentations, roll marks, exterior coatings and flat spots.

b. Install split-sleeve couplings in accordance with the manufacturer's latest installation instructions.

6. Bonding: Bond all pipe joints except where insulated connections are indicated. Clean pipe ends to bare metal and file or grind to prepare surface for cadwelding copper leads. After leads are attached, repair coating or complete field coating of joint.

L. FLANGED COUPLING ADAPTERS

M. When specified or indicated on the contract drawings, flanged coupling adapters shall be installed in strict accordance with manufacturer's recommendations and instructions.

N. MECHANICAL COUPLINGS

1. When specified or indicated on the contract drawings, mechanical couplings shall be installed in accordance with the manufacturer's recommendations and instructions.
2. A space of at least 1/4", and not more than 1", shall be left between the pipe ends.
3. All assembly bolts shall be uniformly tightened so that the coupling is free from leaks and all parts of the coupling are square and symmetrical with the pipe.
4. Following installation of the coupling, damaged areas of shop coatings of the pipe and coupling shall be repaired to the satisfaction of the Inspector.

O. WALL CASTINGS

1. At all points underground where piping exits structures and transitions to natural ground or other areas subject to ground settling or other potential introduced stresses after installation, a bell-flange wall pipe w/ seep ring and restrained mechanical joint shall be provided to allow for deflection whether being shown on drawings or not.
2. Wall pipe shall be provided at all points where ductile iron pipe passes through concrete walls.
3. Where a flange and mechanical joint piece is specified to connect to a mechanical joint wall casting, the bolt holes in the bell of the wall casting shall straddle the top (or side for vertical piping) center line of the casting and shall align with the bolt holes in the flange and mechanical joint piece. The top centerline shall be marked on the wall casting at the foundry.

P. WALL SLEEVES

1. Wall sleeves are to be provided where ductile iron pipe passes through concrete floors and where otherwise specified or indicated on the contract drawings.
2. Wall sleeves are to be sealed using modular casing seals ("link seals") and approved caulking on both sides of the floor penetration.

Q. REDUCERS

1. Reducers, adjacent to flowmeters and pumps or in other locations as specified or indicated on the contract drawings, shall be eccentric pattern, installed with the straight side on top so that air traps are not formed. All other reducers shall be concentric pattern. If no specific pattern is indicated on the Drawings, coordinate with Engineer for clarification prior to bid.

R. CONNECTIONS TO EXISTING PIPING

1. Connections between new work and existing piping shall be made using fittings submitted and approved by the Engineer for each separate condition encountered.
2. Each connection to existing pipe shall be made at a time and under conditions which will least impact normal plant operations, and as authorized in writing by the Engineer.
3. The contractor is responsible for making provisions for cutting of existing pipe when necessary, using approved mechanical means. Flame cutting of pipe will not be allowed.
4. The Contractor is responsible for making provisions for dewatering existing lines and for disposal of water from the dewatering operation.
5. Prior to construction, the Contractor shall submit for review and approval detailed procedures for pressure testing and the making of final connections to existing lines.
6. When connecting to existing fresh and potable water lines, all new piping and fittings shall be cleaned and disinfected prior to making the connection.
    a. Provisions shall be made to prevent any cross-connection and contamination of existing lines.
    b. Trench water, mud, or other contaminants shall not be allowed to enter the lines.
7. The contractor is responsible for disinfection and chlorination of all fresh and potable water lines after connections are made in conformance with these specifications.

S. Polyethylene Encasement: Wrap all bituminous coated ductile iron pipe in V-Bio Enhanced Polyethylene Encasement in accordance with AWWA C105. Utilize DIPRA's Modified Method A installation procedure.
1. Preparation
    a. Remove all lumps of clay, mud, cinders, etc., on pipe surface prior to installation of polyethylene encasement.
        1) Prevent soil or embedment material from becoming trapped between pipeand polyethylene.
    b. Fit polyethylene film to contour of pipe to affect a snug, but not tight encasewith minimum space between polyethylene and pipe.
        1) Provide sufficient slack in contouring to prevent stretching polyethylene where it bridges irregular surfaces such as bell-spigot interfaces, bolted joints or fittings and to prevent damage to polyethylene due to backfillingoperations.
        2) Secure overlaps and ends with adhesive tape and hold.
    c. For installations below water table and/or in areas subject to tidal actions, sealboth ends of polyethylene tube with adhesive tape at joint overlap.
2. Tubular Type (Method A)
    a. Cut polyethylene tube to length approximately 2 feet longer than pipe section.
    b. Slip tube around pipe, centering it to provide 1-foot overlap on each adjacentpipe section and bunching it accordion-fashion lengthwise until it clears pipeends.
    c. Lower pipe into trench and make up pipe joint with preceding section of pipe.
    d. Make shallow bell hole at joints to facilitate installation of polyethylene tube.

e. After assembling pipe joint, make overlap of polyethylene tube, pull bunched polyethylene from preceding length of pipe, slip it over end of the new length of pipe and wrap until it overlaps joint at end of preceding length of pipe.
f. Secure overlap in place.
g. Take up slack width at top of pipe to make a snug, but not tight, fit along barrel of pipe, securing fold at quarter points.
h. Repair cuts, tears, punctures or other damage to polyethylene.
i. Proceed with installation of next pipe in same manner.

3. Pipe-Shaped Appurtenances
   a. Cover bends, reducers, offsets and other pipe-shaped appurtenances with polyethylene in same manner as pipe and fittings.
4. Odd-Shaped Appurtenances
   a. When it is not practical to wrap valves, tees, crosses, and other odd-shaped pieces in tube, wrap with flat sheet or split length polyethylene tube by passing sheet under appurtenances and bringing it up around body.
   b. Make seams by bringing edges together, folding over twice and taping down.
   c. Tape polyethylene securely in place at the valve stem and at any other penetrations.
5. Repairs
   a. Repair any cuts, tears, punctures or damage to polyethylene with adhesive tape or with short length of polyethylene sheet or cut open tube, wrapped around fitting to cover damaged area and secured in place.
6. Openings in Encasement
   a. Provide openings for branches, service taps, blow-offs, air valves and similar appurtenances by making an X-shaped cut in polyethylene and temporarily folding back film.
   b. After appurtenance is installed, tape slack securely to appurtenance and repair cut, as well as other damaged area in polyethylene with tape.
   c. Service taps may also be made directly through polyethylene, with any resulting damaged areas being repaired as described above.
7. Junctions between Wrapped and Unwrapped Pipe:
   a. Where polyethylene-wrapped pipe joins an adjacent pipe that is not wrapped, extend polyethylene wrap to cover adjacent pipe for distance of at least 3 feet.
   b. Secure end with circumferential turns of tape.
   c. Wrap service lines of dissimilar metals with polyethylene or suitable dielectric tape for minimum clear distance of 3 feet away from Cast or Ductile Iron Pipe.

T. Blocking
1. Install concrete blocking in accordance with specifications, for all bends, tees, crosses and plugs in the pipelines as indicated in the Detail Sheets of drawings. Restrained joint piping may be used to reduce/remove blocking. Submittal required.
2. Place the concrete blocking so as to rest against firm undisturbed trench walls, normal to the thrust.

3. The supporting area for each block shall be at least as great as that indicated on the Drawings and shall be sufficient to withstand the thrust, including water hammer, which may develop.
4. Each block shall rest on a firm, undisturbed foundation or trench bottom.
5. If the Contractor encounters soil that appears to be different than that which was used to calculate the blocking according to the Drawings, the Contractor shall notify the Engineer prior to the installation of the blocking.

3.6 PRESSURE AND LEAKAGE TESTING

A. See 40_05_00.13 Piping Testing System

3.7 MARKING TAPE

A. See Section 33_05_97.23 Underground Utility Warning Tape

3.8 DISINFECTION

A. Disinfection of ductile iron pipe shall be performed in conformance with all Oklahoma Department of Environmental Quality (ODEQ) requirements and applicable sections of these Specifications (potable water only.)

3.9 DEFLECTION

A. See 40_05_00.13 Piping Systems Testing

END OF SECTION

THIS PAGE INTENTIONALLY LEFT BLANK FOR DOUBLE SIDED PRINTING

SECTION 40_05_23

STAINLESS STEEL PROCESS PIPE & TUBING

PART 1 GENERAL

1.1 SUMMARY

A. Stainless Steel Process Pipe & Tubing as required by this section of the Contract Documents, unless otherwise indicated specifically on individual drawings and/or other appropriate sections of Contract Documents.

B. All listed iron and steel products used in this project must be produced in the United States. The term "iron and steel products" means the following products made primarily of iron or steel: lined or unlined pipes and fittings, manhole covers and other municipal castings, hydrants, tanks, flanges, pipe clamps and restraints, valves, structural steel, reinforced precast concrete, and construction materials. The deminimis and minor components waiver apply to this contract for minor components.

1.2 RELATED SECTIONS

A. Section 01_00_01 Basic Requirements

B. Section 01_33_01 General Submittal Requirements

C. The Contract Documents are a complete unit and complementary to each other. The individual Specification sections and other Contract Documents do not contain all cross references to "related work" or "related sections." It is the Contractor's responsibility to review the complete Contract Documents in order to properly scope, schedule and coordinate the work of any/all subcontractors, suppliers, and others on this project. Anything called out in one location of the Contract Documents is binding as if it were called out in all sections of the Contract Documents.

1.3 SUBMITTALS

A. Submittals for products and miscellaneous items in this specification section shall be submitted in accordance with Section 01_33_01 General Submittal Requirements and related submittal sections and provisions of the Contract Documents including:

1. Pipe design calculations and layouts sealed by a Licensed Engineer in the State of Oklahoma.
2. Thrust restraint calculations sealed by a Licensed Engineer in the State of Oklahoma.
3. Certification with full compliance with the specifications.
4. Complete materials specification for each part to be furnished.
5. Technical Bulletins and Brochures.
6. Statement of Warranty.
7. A guaranteed delivery date for the equipment (which shall be stated in calendar days after the releases date to the manufacturer.
8. Shipping instructions according to Section 1.06.
9. Name, address, phone number, and fax number of manufacturer's representative.

10. Tests to be run during manufacturing process

1.4 REFERENCES

A. The Contractor and/or Manufacturer shall follow the standards listed below, except as otherwise specified herein. The latest revision or edition in effect at the time of bid opening shall be utilized.

1.5 DELIVERY AND STORAGE

A. Packing and Storage
1. Following shop fabrication, all pipe, fittings and specials shall be pickled and passivated.
2. The pipe shall be prepared for shipment to afford maximum protection from normal hazard of transportation and allow pipe to reach project site in an undamaged condition. Pipe damaged in shipment shall not be delivered to the project site unless such damaged pipe is properly repaired.
3. Pipes shall be carefully supported during shipment and storage. Each length of pipe, fitting, or special shall be internally supported and braced with stulls to maintain a true circular shape. Internal supports shall consist of timber or steel stulls firmly wedged and secured so that the stulls remain in place during handling. Pipe shall be rotated so that one (1) of the stulls is vertical during storage, shipment and installation. Pipe, fittings, and specials shall be separated so that they do not bear against each other in transit. Ship pipe on padded bunks with tie-down straps. Store pipe on padded skids, sand or dirt berms, tires, or other suitable means to protect the pipe from damage.

B. Marking for Identification: Each joint of pipe and each fitting shall have plainly marked continuously down its whole length, the following:
1. Nominal Pipe Size (Nominal Bore)
2. Schedule (Wall Thickness)
3. Specification
4. Grade
5. Method of Manufacture (Seamless or Welded)
6. Heat Number
7. Manufacturer’s Name or Symbol

1.6 QUALITY ASSURANCE

A. Manufacturer: Finished pipe shall be the product of one (1) manufacturer. Pipe manufacturing operations (pipe and fittings) shall be performed at one (1) location.

B. Factory Testing
1. The Owner reserves the option to have an independent testing laboratory, at the Owner's expense, inspect pipe and fittings at the pipe manufacturer's plant. The Owner's testing laboratory and Engineer shall have free access to the manufacturer's plant. The pipe manufacturer shall notify the Owner, in writing, at least two (2) weeks ahead of pipe fabrication as to start of fabrication and fabricating schedule so that the Owner can advise the manufacturer as to Owner's decision regarding tests to be performed by an independent testing laboratory. In the event the Owner elects to retain an independent testing laboratory to make

material tests and weld tests, it is the intent that the tests be limited to one (1) spot testing of each category unless the tests do not show compliance with the standard. If these tests do not show compliance, the Owner reserves the right to have the laboratory make additional tests and observations.

2. The cost of all tests specified are subsidiary to the cost of the pipe and will not be paid for separately.

PART 2 PRODUCTS

2.1 MATERIALS

A. Stainless Steel: Steel shall be homogeneous. Pipe and fittings shall conform to ASTM A 778 except as otherwise specified. Fabricate pipe and fittings from stainless steel sheet conforming to ASTM A 240.

B. Flange Nuts and Bolts: Shall be stainless steel and match piping material.

C. Insulated Connections: Where insulated connections are installed, furnish and install a 1/8" thick gasket conforming to ASTM F104 (Garlock Blue Guard Style 3000 or equal). Furnish and install insulating sleeves and two insulating washers for each bolt.

D. Bushings, Couplings and Plugs: Where outlets or taps are threaded, furnish and install stainless reducing bushings in larger steel half couplings for the outlet size indicated. Threaded plugs shall be stainless steel.

2.2 MANUFACTURED PRODUCTS

A. Pipe:

1. General: Pipe, bends, and special fittings shall be designed, manufactured, and tested in accordance with the applicable requirement and the special requirements of this specification.
2. Pipe Design Criteria: Pipe dimensions and wall thickness shall conform to ANSI B36.19. Fitting dimensions shall conform to ANSI B16.9. Pipe, bends, and special fittings shall be Schedule 40 Type 316L Stainless Steel
3. Pipe shall be die-formed or rolled true to dimension and round within a tolerance of plus or minus 1/16-inch. Two edges of sheet shall be brought to line so as not to leave a shoulder on the inside of the pipe.
4. Ends of pipe shall be perpendicular to the longitudinal axis.
5. Elbows shall be the smooth flow type.
6. Provisions for Thrust:
   a. Thrusts at bends, tees, plugs, or other fittings shall be resisted by restrained joints.
   b. Restrained joints shall be used for a sufficient distance from each side of the bend, tee, plug, or other fitting to resist thrust which will be developed. Restrained joints shall consist of welded joints only. Harnessed joints will only be allowed with approval of the Engineer. Clamp typejoint restraint shall be used where indicated. In areas where restrained joints are used

for thrust restraint, the pipe shall have adequate cylinder thickness to transmit the thrust forces.

7. Inside Diameter: The inside diameter shall be a minimum of the nominal diameter of the pipe specified.
8. Wall Thickness: The minimum pipe wall thicknesses for the different pipe sizes are provided below unless otherwise specified on the drawings, for pipe and fittings with no minus tolerance.

Pipe Inside Diameter	Pipe Schedule	Nominal Wall Thickness
3″	40S	0.216″
8″	10S	0.148″
12″	10S	0.180″
24″	10S	0.250″

9. Seams:
   a. Except for mill-type pipe, the piping shall be made from steel plates or sheets rolled into cylinders or sections thereof with the longitudinal and girth seams butt welded or shall be spirally formed and butt welded.
   b. There shall be not more than two (2) longitudinal seams. Girth seams shall be butt welded and shall not be spaced closer than 6' except in specials and fittings.
   c. Longitudinal seams on pipe shall be welded by either the tungsten inert gas or metallic inert gas method.
   d. Circumferential seams on pipe and fittings shall be welded by the tungsten inert gas method.
   e. Excessive weld deposits, slag, weld spatter and projections into the interior of pipe and fittings shall be removed by grinding.
   f. Interior welds shall be smooth and even and shall not have an internal bead higher than 1/16- inch.
   g. All seams shall be shop welded. Field welding shall not be permitted.

B. Insulated Connections: Where insulated connections are indicated, furnish dielectric insulation gaskets, sleeves, and plastic washers as indicated.

C. Pipe Ends: Pipe ends shall be either butt welded, flanged joint, or flexible coupled joint. Standard pipe joint shall be rubber gasket. Pipe ends shall be welded at all locations necessary to resist thrust forces. Harnessed joints may be used in lieu of welded joints where pipe is adjacent to vaults if approved by the Engineer.

1. Fittings with Flanges: Flanged joints shall be provided where indicated. Ends to be fitted with slip- on flanges shall have the longitudinal or spiral welds ground flush to accommodate the type of flanges provided. Pipe flanges shall be of rated pressure equal to or greater than the adjacent pipe class. Flanges shall match the fittings or appurtenances which are to be attached.
2. Flexible Couplings: Flexible couplings shall be provided where specified. Ends to be joined by flexible couplings shall be of the plain end type, the welds on ends to be joined by couplings shall be ground flush to permit slipping the coupling in at least one (1) direction to clear the pipe joint. Harness bolts and lugs shall comply with the plans.

D. Flanges: Flange drilling shall be in accordance with ANSI B 16.5, unless otherwise specified. Drilling shall match class of valves, pipe, or appurtenances to be attached. Nuts and bolts shall be stainless steel. Gaskets for all flanges shall be spiral, metallic gaskets, "Flexatallic" or equal. Flanges shall be Class 150.

PART 3 EXECUTION

3.1 All stainless steel pipe and fittings shall be installed in accordance with the instructions of the manufacturer and as shown on the drawings.

3.2 Testing: All stainless steel pipe and fittings shall be pressure tested.

3.3 Finish on stainless steel pipe and fittings shall be standard AISI mill finish No. 2B.

END OF SECTION

THIS PAGE INTENTIONALLY LEFT BLANK FOR DOUBLE SIDED PRINTING

SECTION 40_05_33

HIGH DENSITY POLYETHYLENE (HDPE) PIPE

PART 1 GENERAL

1.1 SCOPE OF WORK

A. High Density Polyethylene (HDPE) Pipe

B. The City of Shawnee has selected the following Contractors as prequalified to install the HDPE piping:
   1. Prequalified General Contractors (Self-Perform all associated work without sub contractors)
   2. McGuire Brothers Construction, Tulsa, OK
   3. Belt Construction, Texarkana, AR
   4. Krapff Reynolds, Oklahoma City, OK
   5. Orr Construction, Davenport, OK
   6. TIMCO Blasting & Coatings, Inc, Bristow, OK
   7. Marsau Enterprises, Enid, OK

1.2 RELATED WORK

A. Section 01_00_01 Basic Requirements

B. Section 01_33_01 General Submittal Requirements

C. 33_05_97.23 – Underground Utility Warning Tape

D. The Contract Documents are a complete unit and complementary to each other. The individual Specification sections and other Contract Documents do not contain all cross references to "related work" or "related sections." It is the Contractor's responsibility to review the complete Contract Documents in order to properly scope, schedule and coordinate the work of any/all subcontractors, suppliers, and others on this project. Anything called out in one location of the Contract Documents is binding as if it were called out in all sections of the Contract Documents.

1.3 SUBMITTALS

A. Submittals for products and miscellaneous items in this specification section shall be submitted in accordance with Section 01_33_01 General Submittal Requirements and related submittal sections and provisions of the Contract Documents.

B. The Contractor shall submit the pipe manufacturer's certification of compliance with the applicable sections of the Specifications prior to installation. This certification shall be in the form of a written document from the manufacturer attesting to the manufacturing process meeting the standards.

C. The Contractor shall submit shop drawings showing installation method and the proposed method and specialized equipment to be used.

D. Manufacturer's recommended fusion procedures for the products.

E. Lay Schedule/drawing
1. Prior to installation the contractor shall submit a lay schedule sealed by a Professional Engineer licensed in the State of Oklahomaand must include:
   a. Pipe Dimension Ratio and rated pressure
   b. Fittings – bends, tees, services, connections, MJ adapters or flange adapters
   c. Stationing
   d. Transitions
   e. Deflection
2. Note that lay schedule does not need to indicate location of butt fusion joints, as these will be determined in the field based on available pipe lengths and field conditions.

F. Installer's qualifications

G. Data Logger Records
1. Provide electronic data logger record to the Engineer daily or on request of Engineer.
2. Fusion Reports shall report manufacturer, component, component fusion-jointing parameters, assembly operation and joint identification, per ISO 12176-4, and the following fusion-jointing operation data:
   a. Temp-Compensated Fusion Time & Actual Fusion Time
   b. Resistance before & after fusion
   c. Hi and Low output voltage & output current during fusion
   d. Total Amp-Hours applied to fitting
   e. Input voltage and frequency before fusion
   f. High and Low input voltage and frequency during fusion
   g. Input waveform
   h. GPS position and quality
   i. Ambient temperature
   j. Heating iron face temperatures
   k. Fusion pressure
   l. Graphic representation of the fusion cycle.
3. Report shall comply with ISO 12176-2 requirements for traceability databases.

1.4 REFERENCE STANDARDS

A. The Contractor and/or Manufacturer shall follow the standards listed below, except as otherwise specified herein. The latest revision or edition in effect at the time of bid opening shall be utilized.

B. In the event of a conflict with referenced standards the most stringent requirements prevail.
1. ANSI/AWWA:

a. AWWA M55 Manual of Water Supply Practices, PE Pipe–Design and Installation
b. ANSI/AWWA C111/A21.11-12 Rubber-Gasket Joints for Ductile-Iron Pressure Pipe and Fittings
c. AWWA C207-13 Steel Pipe Flanges for Waterworks Service, Sizes 4 In. Through 144 In. (100 mm Through 3,600 mm)
d. ANSI/AWWA C651 Standard for Disinfecting Water Mains
e. ANSI/AWWA C800 Underground Service Line Valves and Fittings
f. ANSI/AWWA C901-08 Polyethylene (PE) Pressure Pipe and Tubing, ½ In. (13mm) Through 3 In. (76 mm) for Water Service
g. ANSI/AWWA C906-15 Polyethylene (PE) Pressure Pipe and Fittings, 4 In. Through 65 In. (100 mm to 1,650 mm), for Waterworks

2. Plastics Pipe Institute (PPI):
   a. PPI Handbook of Polyethylene Pipe – 2009 (2nd Edition)
   b. PPI TR-33 Generic Butt Fusion Joining Procedure for Polyethylene Gas Pipe
   c. PPI TR-34 Disinfection of Newly Constructed Polyethylene Water Mains
   d. PPI TN-34 Installation Guidelines for Electrofusion Couplings 14-inch and Larger
   e. PPI TN-42 Recommended Minimum Training Guidelines for PE Pipe Butt Fusion Joining Operators for Municipal and Industrial Projects (2009)
   f. Municipal Advisory Board Generic Electrofusion Procedure for Field Joining of 12 Inch and Smaller Polyethylene (PE) Pipe
3. National Sanitation Foundation (NSF):
   a. NSF / ANSI 61 Drinking Water System Components–Health Effects
4. ASTM:
   a. ASTM A 240 Standard Specification for Chromium and Chromium-Nickel Stainless Steel Plate, Sheet, and Strip for Pressure Vessels and for General Applications
   b. ASTM D 2239 Standard Specification for Polyethylene (PE) Plastic Pipe (SIDR- PR) Based on Controlled Inside Diameter
   c. ASTM D 2683 Standard Specification for Socket-Type Polyethylene Fittings for Outside Diameter-Controlled Polyethylene Pipe and Tubing
   d. ASTM D 2774 Standard Practice for Underground Installation of Thermoplastic Pressure Piping
   e. ASTM D 3035 Polyethylene (PE) Plastic Pipe (DR-PR) Based on Controlled Outside Diameter
   f. ASTM D 3261 Standard Specification for Butt Heat Fusion Polyethylene (PE) Plastic Fittings for Polyethylene (PE) Plastic Pipe and Tubing
   g. ASTM D 3350-08 Standard Specification for Polyethylene Plastics Pipe and Fittings Materials
   h. ASTM F 714 Standard Specification for Polyethylene (PE) Plastic Pipe (SDR) Based on Outside Diameter
   i. ASTM F 905 Standard Practice for Qualification of Polyethylene Saddle-FusedJoints
   j. ASTM F 1055 Standard Specification for Electrofusion Type Polyethylene Fittings for Outside Diameter Controlled Polyethylene Pipe and Tubing
   k. ASTM F 1290 Standard Practice for Electrofusion Joining Polyolefin Pipe andFittings
   l. ASTM F 1668 Standard Guide for Construction Procedures for Buried PlasticPipe

m. ASTM F 2164 Standard Practice for Field Leak Testing of Polyethylene (PE) Pressure Piping Systems Using Hydrostatic Pressure
n. ASTM F 2206 Standard Specification for Fabricated Fittings of Butt-Fused Polyethylene (PE) Plastic Pipe, Fittings, Sheet Stock, Plate Stock, or Block Stock
o. ASTM F 2620 Standard Practice for Heat Fusion Joining of Polyethylene Pipeand Fittings

5. International Organization for Standardization:
   a. ISO 12176-2 Plastics pipes and fittings -- Equipment for fusion jointing polyethylene systems
   b. ISO/TR 13950 Plastics pipes and fittings -- Automatic recognition systems forelectrofusion joints
6. Plastic Pipe Institute
   a. TR-41 Generic Saddle Fusion Joining Procedure for Polyethylene Gas Piping

1.5 QUALITY ASSURANCE

A. Qualifications
   1. Manufacturers
      a. Finished pipe shall be the product of one manufacturer.
         1) Materials for change orders, specials, and field changes may be provided bya different manufacturer upon Engineer approval.
      b. Submit written verification that the pipe manufacturer has been manufacturingASTM F714 pipe of similar design pressure and size to the specified pipe for no less than five (5) years.

B. Pipe manufacturing operations (pipe, lining, and coatings) shall be performed under the control of the manufacturer.

C. Pipe, fittings, and appurtenances shall meet all requirements of NSF 61.

D. Furnish affidavits of compliance with referenced standards when requested.

E. Each pipe size to be furnished on this project shall be tested by the manufacturer, in accordance with the governing product standard, latest revision. Results of these tests shall be submitted to the Engineer. Tests required shall include Load Bearing, Material, Cell Class, Acetone, Dimensional and Hydrostatic tests.

F. Large diameter pipes shall be tested in accordance with the physical, dimensional, and performance requirements of AWWA C906. It shall be listed by Underwriter's Laboratories. Each pipe will be hydrostatically proof tested using AWWA C906 before being shipped.

G. Pipe and fittings shall be clearly marked by the manufacturer with the following information in such a manner that will remain legible after inspection:

H. The pipe manufacturer shall provide certification that the pipe supplied conforms to these specifications and shall include laboratory test results that support such certification. If the Manufacturer is unable to provide the certification, an independent testing facility shall be utilized and retained at no cost to the Owner. The pipe supplied shall be permanently

marked with the Manufacturer's name, the date of manufacture, and identification with the tests performed to warrant its certification as being in conformance with this standard.

I. An inspection of the pipe after delivery to the project shall be made by a representative of the Owner. Pipe with visible defects which are indicative of poor structural condition or poor workmanship shall be rejected and replaced without cost to the OWNER. Visible defects shall include cracks of any type damage, delamination, splitting, honeycombs, or any other defects of poor workmanship. Any pipe rejected shall not be returned under any condition to the project.

1.6 DELIVERY, HANDLING AND STORAGE

A. Storage and Handling Requirements
1. Handle the pipe in accordance with the PPI Handbook of Polyethylene Pipe (2nd Edition), Chapter 2 using approved strapping and equipment rated for the loads encountered. Do not use chains, wire rope, forklifts or other methods or equipment that may gouge or damage the pipe or endanger persons or property. Field storage isto be in compliance with AWWA Manual of Practice M55 Chapter 7.
2. If any gouges, scrapes, or other damage to the pipe results in loss of 10% of the pipe wall thickness, cut out that section or do not use. Damages resulting from improper delivery, storage, or handling are the responsibility of the Contractor, andno additional payment will be made.
3. Pipe and fittings shall be delivered to the job site from the factory and stored at the job site in palletized units or bundles to prevent unnecessary deflection prior to installation. Each palletized unit shall be sized to limit the stacking of pipe to not more than 60 inches high.
4. Care shall be taken during the transporting of the pipe to ensure that the binding and tie down methods do not damage or deflect the pipe in any manner.
5. Pipe bent, deflected, discolored or otherwise damaged during shipping will be rejected.
6. Pipe stored on the job site shall be covered with canvas or other opaque material to protect it from the sun's rays. Air circulation shall be provided under the covering. Pipe shall not be removed from the pallet and/or laid out along the ditch until the bedding material is in place and ready to receive the pipe. Pipe shall not be stored in direct sun exposure for more than 30 days.
7. In addition to these specifications, all pipe and fittings shall be delivered and stored per manufacturer's recommendations and specifications.

PART 2 PRODUCTS

2.1 MATERIALS

A. Only the pipe manufacturers as listed below are allowed. Other manufacturers may be considered as equals on a project basis.
1. Performance Pipe
2. Georg Fischer
3. JM Eagle
4. Driscoplex
5. WL Plastics

6. ISCO Industries

B. Only the electrofusion fittings manufacturers as listed below are allowed. Other manufacturers may be considered as equals on a project basis.
   1. Agru America
   2. Georg Fischer Central Plastics
   3. Integrity Fusion Products
   4. IPEX, Inc.
   5. M.T. Deason Company
   6. Nupi Americas
   7. Plasson, USA
   8. Strongbridge-Tega

C. Only the butt fusion fittings manufacturers as listed below are allowed. Other manufacturers may be considered as equals on a project basis.
   1. ISCO
   2. IPEX
   3. Georg Fisher

D. Only the fusion equipment manufacturers as listed below are allowed. Other manufacturers may be considered as equals on a project basis.

E. McElroy

F. Any product that is not listed on the Standard Products List is considered a substitution and shall be submitted in accordance with Substitution Request Section of the Project Manual.

G. HDPE Pipe
   1. Pipe shall have a manufacturing standard of ASTM D3035 and meet AWWA C901. Pipe shall be DR 11 unless otherwise specified on the plans. The pipe shall contain no recycled compounds except that generated in the manufacturer's own plant from resin of the same specification from the same raw material
   2. For diameters from 1/2-inches through 3-inches, HDPE pipe and fittings shall meet the requirements of AWWA C901.
   3. For diameters from 4-inches through 32-inches, HDPE pipe and fittings shall meet the requirements of AWWA C906.
   4. The outside diameter of the pipe shall be based on the Ductile Iron Pipe Size(DIPS) sizing system (unless connecting to distribution piping that is Iron Pipe Sizing (IPS) or detailed on the Drawings.)
   5. HDPE pipe shall be rated for use at a working pressure shown on the Drawings.
   6. Polyethylene pipe shall be made from HDPE resin having a material designation code of PE4710 or higher.
   7. The material shall meet the requirements of ASTM D 3350 and shall have a minimum cell classification of PE445474C.
   8. HDPE Pressure Pipe for potable water shall meet the requirements of NSF 61.
   9. Pipe Markings
      a. Meet the minimum requirements of AWWA C906. Minimum pipe markings shall be as follows:
         1) Manufacturer’s Name or Trademark and production record

2) Nominal pipe size
3) DIPS
4) Dimension Ratio
5) AWWA C906
6) Resin type (PE4710)

b. Color identification to identify pipe service is required.
1) Stripes or colored exterior pipe product shall be blue for potable water and green for sewer.
2) Permanent identification of piping shall be provided by co-extruding multiple equally spaced color stripes into the pipe outside surface or bysolid colored pipe shell.
3) The striping material shall be the same material as the pipe material exceptfor the color.
4) Plain Black HDPE Pipe without color code markings may not be used.
5) Only smooth wall HDPE will be permitted.

10. Socket fusion is not allowed.
11. Pipe shall be manufactured by an ISO 9001 certified manufacturer. The pipe manufacturer shall have an ongoing Quality Control program for incoming and outgoing materials, and shall assure that the pipe will meet the material requirements of this specification. HDPE resins for manufacturing of pipe shall be checked for density, melt flow rate, and contamination. The facility shall have the necessary testing equipment to verify that pipe meets the AWWA and NSF standards. Pipe shall be checked for outside diameter, wall thickness, length, and surface finish on the inside and outside. The Manufacturer's production facilities shall be open for inspection by the Owner or Engineer.

H. HDPE Butt Fusion Fittings:
1. Butt Fusion Fittings shall be made of HDPE material with a minimum material designation code of PE4710 and with a minimum Cell Classification equal to the HDPE pipe.
2. Butt Fusion Fittings shall meet the requirements of ASTM D3261. Molded and fabricated fittings shall have a pressure rating equal to or greater than the pipe unless otherwise specified on the plans.
a. Pipe stock used to manufacture fabricated fittings shall meet requirements ofAWWA C906 and meet the material designation code of PE4710.
b. Fabricated Fittings typically require a lower DR rating than the pipe to meet orexceed the pipe pressure rating. Calculate the difference for a fabricated fittingbased on a published rerating percentage.
c. Fabricated bend and tee fittings shall have a minimum of 3 segments.
d. Fabricated 45 degree bend fittings shall have 2 segments and 90 degree bendsshall have 3 segments.
e. Field fabricated fittings are not allowed.
3. All fittings shall meet the requirements of AWWA C906.
4. Markings for molded fittings shall comply with the requirements of ASTM D 3261.
a. Standard Designation (ASTM D 3261)
b. Manufacturer's name or trademark
c. Material designation (PE4710)
d. Date of manufacture or manufacturing code
e. Size

f. Dimension Ratio

5. Fabricated fittings shall be marked in accordance with ASTM F 2206.
   a. Standard Designation (ASTM F 2206)
   b. Manufacturer's name or trademark
   c. Material designation (PE4710)
   d. Date of manufacture or manufacturing code
   e. Size
   f. Equivalent Dimension Ratio

I. Flanges and Mechanical Joint Adapters (MJ Adapters):
1. Flanges and Mechanical Joint Adapters shall have a material designation code of PE4710 or higher and a minimum Cell Classification equal to the HDPE pipe.
2. Flanged and Mechanical Joint Adapters can be made to ASTM D 3261 or, if machined, must meet the requirements of ASTM F 2206.
3. The outside diameter of Flanges shall be based on Ductile Iron Pipe Size (DIPS).
4. Flanges and MJ Adapters shall have a pressure rating equal to the pipe unless otherwise specified on the plans.
5. Markings for molded or machined flange adapters or MJ Adapters shall be per ASTM D 3261.
   a. Manufacturer's name or trademark
   b. Material designation (PE4710)
   c. Date of manufacture or manufacturing code
   d. Size
   e. Where recessed marking is used, take care not to reduce the wall thickness below the minimum specified.
6. Fabricated (including machined) flange adapters shall be per ASTM F 2206.
7. Metal gland for MJ Adapter may be either AWWA C110 (heavyweight) or AWWA C153 (lightweight).
8. Low alloy steel bolts shall comply with AWWA C 111.4. Bolts, rods and hex nuts shall be manufactured from 304 stainless steel as per ANSI/ AWWA C111/A21.11.
9. Van-Stone style, metallic, convoluted or flat-plate, back-up rings and bolt materials shall follow the guidelines of Plastic Pipe Institute Technical Note # 38, and shall have the bolt-holes and bolt-circles conforming to one of these standards: ASME B-16.5 Class 150, ASME B-16.47 Series A Class 150, ASME B-16.1 Class 125, or AWWA C 207 Class 150 Series B, D, or E.
10. The stainless steel back-up ring shall provide a long-term pressure rating equal to or greater than the pressure class of the pipe with which the flange adapter assembly will be used, and such pressure rating shall be marked on the back-up ring. The back-up ring, bolts, and nuts shall be Type 304 stainless steel.
11. Mechanical Joint Wedge Action Restraint are not allowed.
12. Where shown on the drawings, 4" and larger transitions to mechanical joint fittings and valves shall be accomplished using a MJ Adapter with kit. The D.I./HDPE mechanical joint adaptor shall consist of:
    a. A molded or fabricated HDPE mechanical joint transition fitting.
    b. A rubber gasket.
    c. A mechanical joint backup drive ring.
    d. Corten mechanical joint tee bolts, or approved equal.

J. Pipeline Markers:

1. Provide Tracer wire on ALL HDPE piping in accordance with Section 33_05_97.23 – Underground Utility Warning Tape

K. Stiffening Insert (Stiffener)
1. Provide Stiffeners at each MJ adapter and coupling.
2. Stiffening inserts shall be specially designed for use on the inside of HDPE pipe in conjunction with AWWA C111 mechanical joints.
3. Provide stainless steel per ASTM A 240, type 304 or 316.
4. Stiffener shall be manufactured within the pipe or MJ adapter by the factory.
5. Field installed stiffeners may be allowed upon approval of the Engineer. Wedge style stiffeners are allowed.
6. Stiffener length must be sufficient to fully encompass the area of the pipe being restrained.
7. Inserts must be designed for underground pressurized fluid service and are pressurerated to match the pipe DR pressure rating, derated as appropriate for service temperature. Maximum test pressure limited to pipe rated pressure.
8. Stiffener design shall prevent movement causing fitting to slide or rotate on the pipe.

PART 3 EXECUTION

3.1 INSTALLERS

A. Only prequalified installers will be allowed to perform work under this Specification. See Scope of Work.

B. F 2620 for butt fusion.

C. Training in accordance with ASTM F 1055 for electrofusion.

D. Fusion joints shall be made by qualified fusion technicians per PPI TN-42.

E. Qualified technician has documented prior experience in performing HDPE pipe installations, head fusion procedures, and testing methods.

3.2 INSTALLATION

A. General
1. Install pipe, fittings, specials, and appurtenances as specified herein, as specified inAWWA M55, and in accordance with the pipe manufacturer's recommendations with the intention of providing a leak-free system to the Owner.
2. Excavate and backfill trenches in accordance with the Project Manual.

B. Pipe Handling
1. At the close of each operating day, when work is stopped for more than 30 minutes,or when the trench is unsupervised:
a. Keep the pipe clean and free of debris, dirt, animals, and trash – during andafter the laying operation.
b. Effectively seal the open end of the pipe using a gasketed night cap.

C. Joining Methods
1. Butt Fusion: The pipe shall be joined by the butt fusion procedure outlined in ASTM F 2620 or PPI TR-33. All fusion joints shall be made in compliance withthe pipe or fitting manufacturer's recommendations.
2. Saddle fusion: Saddle fusion shall be done in accordance with ASTM F 2620 or PPI TR-41 or the fitting manufacturer's recommendations and PPI TR-41.
3. Electrofusion: Electrofusion joining shall be done in accordance with the manufacturers recommended procedure. Other sources of electrofusion joining information are ASTM F 1290 and PPI TN 34. The process of electrofusion requires an electric source, a transformer, commonly called an electrofusion box that has wire leads, a method to read electronically (by laser) or otherwise input thebarcode of the fitting, and a fitting that is compatible with the type of electrofusionbox used. The electrofusion processor must be capable of reading and storing the input parameters and the fusion results for later download to a record file. Qualification of the fusion technician shall be demonstrated by evidence electrofusion training within the past year on the equipment to be utilized for this project.

D. Mechanical
1. Mechanical connection of HDPE to auxiliary equipment such as valves, pumps, and fittings shall use mechanical joint adapters and other devices in conformance with this specification.
2. Unless specified by the fitting manufacturer, a restraint harness or concrete anchor is recommended with mechanical couplings to prevent pullout.
3. Mechanical coupling shall be made by qualified technicians.

E. Joint Recording
1. Butt Fusion: The butt fusion equipment must be capable of reading and storing the input parameters (including GPS location) and the fusion results for later download to a record file.
2. Electrofusion: The electrofusion equipment must be capable of reading and storing the input parameters (including GPS location) and the fusion results for later download to a record file.
3. The critical parameters of each fusion joint, as required by the manufacturer and these specifications, shall be recorded by an electronic data logging device. All fusion joint data shall be included in the Fusion Technician's joint report.

F. Installation
1. Mechanical joints shall be installed in accordance with Section 02531 - DuctileIron Pipe and Fittings.
2. Buried HDPE pipe and fittings shall be installed in accordance with ASTM D2774 for pressure systems and AWWA Manual of Practice M55 Chapter 7.
3. Lay pipe with blue stripe within 45-degrees either side of crown.
4. Pipe embedment – In accordance with drawings and applicable plan sections

G. Leakage Testing
1. Hydrostatic leakage testing is recommended and shall comply with AWWA C651, ASTM F 2164, ASTM F 1412, AWWA Manual of Practice M55 Chapter 9, and PPI Handbook of Polyethylene Pipe Chapter 2 (2nd Edition). If the test section fails

this test, the Contractor shall repair or replace all defective materials and/or workmanship at no additional cost to the Owner.

2. Prior to scheduling a test with the Engineer, preform a pre-test to confirm compliance.
3. Contractor shall perform hydrostatic and leakage tests in accordance with North Carolina state requirements.
4. Installed main shall be adequately anchored with a covering of at least 6-inches of initial backfill, if installed by an open trench method. The joints and fittings, particularly flange connections shall be left uncovered for visual leak inspection.
5. Leak tests of HDPE water system shall be conducted in accordance with ASTM F2164. The pipeline should be slowly filled with potable water and all trapped air bled off. The main should undergo a hydrostatic pressure test using pressure at the lowest elevation in the system at 150 psi. The pressure shall be maintained constant for 4-hour period by adding makeup water. After 4-hour period is completed, the pressure shall remain steady within 5% (7.5 psi) of a target 150 psi test pressure for one hour.
6. The total test time should not exceed 8 hours. If the pipeline has to be retested – the pipe must be depressurized and allowed to "relax" for at least 8 hours before the next testing sequence.
7. The pressure shall be maintained constant for 4-hour period by adding makeup water. After 4-hour period is completed, test the pressure at the lowest point.
8. Test pressure for one hour. Pressure should remain steady at 1.5 times the working pressure, but not more than the design pressure of the pipe (e.g. 200 psi for DR 11). Pressure must remain within 5% of a target test pressure for one hour.
9. In fused polyethylene water piping system no leakage shall be present. If leakage is observed at a fusion joint, complete rupture may be imminent. The Contractor shall move all personnel away from the joint and depressurize the main. Leaks, failure, or defective construction shall be promptly repaired by the Contractor at the Contractor's sole expense.
10. Payment for pressure and leakage testing shall be considered included in the price paid per linear foot for water main installation.
11. Pneumatic (compressed air) leakage testing of HDPE pressure piping is prohibited for safety reasons.

H. Data Logger Records

1. Provide electronic data logger record to the Engineer daily or on request of Engineer.
2. Fusion Reports shall report manufacturer, component, component fusion-jointing parameters, assembly operation and joint identification, per ISO 12176-4, and the following fusion-jointing operation data:
    a. Temp-Compensated Fusion Time & Actual Fusion Time
    b. Resistance before & after fusion
    c. Hi and Low output voltage & output current during fusion
    d. Total Amp-Hours applied to fitting
    e. Input voltage and frequency before fusion
    f. High and Low input voltage and frequency during fusion
    g. Input waveform
    h. GPS position and quality
    i. Ambient temperature

j. Heating iron face temperatures
k. Fusion pressure
l. Graphic representation of the fusion cycle.

3. Report shall comply with ISO 12176-2 requirements for traceability databases.

END OF SECTION

SHAWNEE MUNICIPAL AUTHORITY

WASTEWATER SYSTEM IMPROVEMENTS

CONTRACT DOCUMENTS & SPECIFICATIONS
VOLUME 5 OF 8
DIVISION 40 TO DIVISION 46

IN COOPERATION WITH

OKLAHOMA WATER RESOURCES BOARD

OWRB PROJECT # ORF-20-0018-CWA

ISSUED FOR BIDDING

City of Shawnee
OKLAHOMA

WALL ENGINEERING

Wall Engineering Project # SHN-20-01
WE Firm Certificate of Authorization #5413

THIS PAGE INTENTIONALLY LEFT BLANK FOR DOUBLE SIDED PRINTING

SHAWNEE MUNICIPAL AUTHORITY
WASTEWATER SYSTEM IMPROVEMENTS

ISSUED: FOR CONSTRUCTION

June 2022

The seal below covers the following sections of the Contract Documents:

Division 0, Division 1, Division 2, Division 3, Division 5, Division 9, Division 10, Division 13, Division 31, Division 32, Division 33, Division 40, Division 41, Division 43, Division 46, Division 47



THIS PAGE INTENTIONALLY LEFT BLANK FOR DOUBLE SIDED PRINTING

SHAWNEE MUNICIPAL AUTHORITY
WASTEWATER SYSTEM IMPROVEMENTS

ISSUED: FOR CONSTRUCTION

June 2022

The seal below covers the following sections of the Contract Documents:

Division 26, Division 27, Division 28



THIS PAGE INTENTIONALLY LEFT BLANK FOR DOUBLE SIDED PRINTING

SHAWNEE MUNICIPAL AUTHORITY
WASTEWATER SYSTEM IMPROVEMENTS

ISSUED: FOR CONSTRUCTION

JUNE 2022

The seal below covers the following sections of the Contract Documents:

Division 23



THIS PAGE INTENTIONALLY LEFT BLANK FOR DOUBLE SIDED PRINTING

CONTRACT DOCUMENTS
TABLE OF CONTENTS

VOLUME 1 OF 8

DIVISION 00 – PROCUREMENT AND CONTRACTING DOCUMENTS

00_01_01.01	Project Title Page
00_01_07.01	Seals Page, Civil
00_01_07.02	Seals Page, Electrical
00_01_07.03	Seals Page, Mechanical
00_01_10	Table of Contents
00_01_19	Prequalified Contractors
00_01_21	Requirements for Bidders

PROCUREMENT REQUIREMENTS

00_11_13	Advertisement for Bids
00_21_13	Instruction to Bidders
00_41_13	Bid Form
00_41_13	Bid Form - Attachment "A" - Bid Summary Sheet
00_41_16	List of Manufacturers
00_41_19	List of Subcontractors
00_41_16	List of Manufacturers
00_41_19	List of Subcontractors
00_41_22	Special Materials Cost Increases
00_43_13	Bid Security Form
00_45_19.13	Noncollusion Affidavit
00_45_21	Business Relationship Affidavit
00_45_17.13	Payroll Affidavit

OWRB CWSRF SPECIAL PROCUREMENT & PROJECT REQUIREMENTS

00_46_47.39	Certification of Labor Standards
00_46_47.19	DBE Guidance
00_46_47.23	DBE Subcontractor Participation Form
00_46_47.26	DBE Subcontractor Performance Form
00_46_47.29	DBE Subcontractor Utilization Form
00_46_47.33	American Iron & Steel Certification
00_46_47.36	Bidder Statements
00_46_47.39	Wage Rates – Building
00_46_47.41	Wage Rates – Heavy

CONTRACTING REQUIREMENTS

00_51_00	Notice of Award
00_52_13	Agreement - Stipulated Price
00_55_00	Notice to Proceed

PROJECT FORMS

00_61_13.13	Performance Bond Form
00_61_13.16	Payment Bond Form
00_61_20	Maintenance Bond Form
00_62_16	Certificate of Insurance
00_62_76	Application for Payment Form
00_62_76.13	Invoice Affidavit Form

THIS PAGE INTENTIONALLY LEFT BLANK FOR DOUBLE SIDED PRINTING

CONTRACT DOCUMENTS
TABLE OF CONTENTS

00_63_13 Request for Information
00_63_36 Field Order Form
00_63_49 Work Change Directive Form
00_63_63 Change Order Form
00_63_67 Attorney Certificate of Approval
00_65_16 Substantial Completion Form
00_65_19.24 Acceptability of Work Form
00_65_19.29 Release of Claimants Form
00_65_19.32 Property Owner Release Form

CONDITIONS OF THE CONTRACT
00_72_13 General Conditions - Stipulated Sum
00_73_00 Supplementary Conditions
00_73_02 OWRB Supplemental Conditions

VOLUME 2 OF 8

DIVISION 01 – GENERAL REQUIREMENTS
01_00_01 Basic Requirements
01_11_01 Sequence of Construction
01_29_00 Payment Procedures
01_32_34 Photographic & Video Log
01_33_01 General Submittal Requirements
01_33_02 Pre-Bid Equipment Submittal Requirements
01_36_00 Pipe Laying Prove-out
01_43_24 System Integrator Prequalification
01_45_24 Special Tests & Inspections
01_45_29 Testing Laboratory Services
01_56_17 Dust Control
01_75_23 Testing, Training & Facility Startup
01_78_23 Operation and Maintenance Data
01_78_34 Warranties and Bonds
01_91_01 Facility Commissioning

DIVISION 02 – EXISTING CONDITIONS
02_21_20 Subsurface Utility Engineering
02_30_00 Subsurface Investigation
02_41_00 Demolition

DIVISION 03 – CONCRETE
03_11_00 Concrete Formwork
03_15_20 Concrete Joints & Embedded Items
03_20_00 Concrete Reinforcement
03_21_18 Epoxy Bonding in Concrete
03_30_00 Cast-in-place Concrete
03_35_00 Concrete Finishes
03_60_00 Grouting
03_60_01 Basin Bottom Grout
03_70_00 Mass Concrete

THIS PAGE INTENTIONALLY LEFT BLANK FOR DOUBLE SIDED PRINTING

CONTRACT DOCUMENTS
TABLE OF CONTENTS

DIVISION 05 – METALS
05_05_20 Anchorages
05_05_25 Mechanical Anchoring
05_50_00.01 Miscellaneous Metal Fabrications
05_51_00.13 Metal Ladders, Platforms & Stairs
05_52_00 Metal Railings
05_53_00.13 Metal Grates & Cover Plates

DIVISION 9 – FINISHES
09_91_00.13 Painting of Treatment Plants

DIVISION 10 - SPECIALTIES
10_44_16 Fire Extinguishers

DIVISION 13 – SPECIAL CONSTRUCTION
13_34_19 Metal Building Systems

VOLUME 3 OF 8

DIVISION 23 – HEATING, VENTILATING & AIR CONDITIONING (HVAC)
23_00_00 Mechanical General Requirements

DIVISION 26 – ELECTRICAL
26_05_00 Common Work Results for Electrical
26_05_20 Hazardous Classified Area Construction
26_06_00 Grounding & Bonding
26_07_00 Hangers & Supports
26_07_50 Identification for Electrical Systems
26_12_30 600-Volt or Less Wires & Cables
26_12_50 Fiber Optic Cable & Appurtenances
26_13_00 Conduits
26_13_30 Duct Banks
26_13_40 Boxes
26_13_60 Wireway
26_14_00 Wiring Devices
26_15_00 Low Voltage Wire Connections
26_21_00 Utility Coordination
26_26_20 Variable Frequency Drives 0.50-50 Horsepower
26_26_50 Reduced Harmonic Variable Frequency Drives
26_27_20 Dry-Type Transformers
26_28_50 Surge Protection Devices
26_29_00 Electrical Power Monitoring
26_30_50 Electrical System Studies
26_31_21.50 600KW Generator
26_32_13.60 200A Automatic Transfer Switch
26_32_13.10 15KW Generator
26_32_13.20 1750KW Generator
26_32_13.30 150A ATS

THIS PAGE INTENTIONALLY LEFT BLANK FOR DOUBLE SIDED PRINTING

CONTRACT DOCUMENTS
TABLE OF CONTENTS

26_32_13.40 4000A ATS
26_41_10 Disconnect Switches
26_41_20 Low Voltage Molded Case Circuit Breakers
26_41_30 Low Voltage Insulated Case Circuit Breakers
26_42_20 Motor Starters
26_44_10 Group Mounted Circuit Breaker Switchboards
26_44_50 Panelboards
26_47_20 Package Power Supply Center
25_51_00 Lighting LED Luminaires
26_67_00 Lighting Protection
26_95_00 Field Electrical Acceptance Tests

DIVISION 27 – PROCESS CONTROL & INSTRUMENTATION SYSTEMS
27_05_00 Common Work Results for Process Control & Instrumentation Systems
27_10_00 Control Strategies
27_30_60 Level Measurement Ultrasonic
27_30_20 Flow Measurement Magnetic Flowmeters
27_34_00 Analytical Devices
27_40_70 Pressure Measurement Submersible
37_60_40 Temperature Measurement RTD
27_71_00 Control Systems Panel Enclosure and Panel Components
27_72_00 Control Systems Programmable Logic Controllers
27_73_30 Control Systems Network Materials & Equipment
27_73_31 Computer System Hardware
27_73_32 HMI System Software
27_95_00 Commissioning for Instrumentation & Controls

DIVISION 28 – ELECTRONIC SAFETY & SECURITY
28_21_01 CCTV Monitoring System

VOLUME 4 OF 8

DIVISION 31 – EARTHWORK
31_00_00 Earthwork
31_05_19 Geosynthetics for Earthwork
31_23_23.33 Flowable Fill
31_23_34 Utility Earthwork & Backfill
31_25_00 Erosion Control
31_41_33 Trench Shielding

DIVISION 32 – EXTERIOR IMPROVEMENTS
32_31_13 Chainlink Fences and Gates
32_92_00 Turf and Grasses

DIVISION 33 – UTILITIES
33_01_30.90 Bypass Pumping of Sewer Systems
33_01_33 Wastewater Liquid & Sludge Removal & Disposal
33_05_05.17 Mechanical Joint Restraint
33_05_07.13 Utility Directional Drilling

THIS PAGE INTENTIONALLY LEFT BLANK FOR DOUBLE SIDED PRINTING

CONTRACT DOCUMENTS
TABLE OF CONTENTS

33_05_07.23 Utility Boring & Jacking
33_05_09.34 Concrete Thrust Blocks & Collars
33_05_25 Steel Casing Pipe
33_05_61 Concrete Manholes
33_05_64 Precast Reinforced Concrete Vault
33_05_97.23 Underground Utility Warning Tape
33_05_97.24 Utility Locator System

DIVISION 40 – PROCESS INTERCONNECTIONS
40_05_00.13 Piping Systems Testing
40_05_06.03 Pipe Couplings
40_05_07.03 Pipe Supports
40_05_12 Piping Specialties
40_05_19.20 Ductile Iron Pipe & Fittings
40_05_23 Stainless Steel Process Pipe & Tubing
40_05_33 High Density Polyethylene (HDPE) Pipe

VOLUME 5 OF 8

40_05_57.24 Electric Actuators for Valves and Gates
40_05_58 Specialty Valves
40_05_59.23 Stainless Steel Gates
40_05_61.43 Knife Gate Valves
40_05_62.64 Butterfly & Plug Valves
40_05_66.23 Surge Relief Angle Valves
40_05_67 Gate Valves
40_05_71.23 Mud Valves
40_41_13.01 Insulation and Heat Tracing
40_71_84 Parshall Flumes
40_75_43 Dissolved Oxygen Sensors

DIVISION 41 – MATERIALS PROCESSING AND HANDLING EQUIPMENT
41_21_23.15 Belt Conveyor System
41_22_00 Cranes & Hoists

DIVISION 43 – PROCESS & LIQUID HANDLING, PURIFICATION & STORAGE EQUIPMENT
43_11_16 High Efficiency Blower Packages
43_23_31.35 Non-Potable Water Pumps
43_23_58.03 Positive Displacement Rotary Lobe Pumps
43_25_13.13 Submersible Pump System

DIVISION 46 – WATER & WASTEWATER EQUIPMENT
46_05_09 Process Equipment Identification
46_05_12 Equipment General Provisions
46_07_54 Waste Activated Sludge Pump Station
46_21_53 Perforated Fine Screen
46_21_73.13 Screw Washer Compactor
46_23_24 Grit Removal, Washing & Dewatering
46_33_33 Polymer Blending & Feed Equipment

THIS PAGE INTENTIONALLY LEFT BLANK FOR DOUBLE SIDED PRINTING

CONTRACT DOCUMENTS
TABLE OF CONTENTS

46_41_23	Submersible Mixers
46_51_55	Low Profile Cascade Aerator
46_53_57	SBR & Aerobic Digester
46_66_57	UV Disinfection Equipment
46_76_21.03	Belt Filter Press System

VOLUME 6 OF 8
CONSTRUCTION DRAWINGS – NORTHSIDE WASTEWATER TREATMENT PLANT

VOLUME 7 OF 8
CONSTRUCTION DRAWINGS – SOUTHSIDE & LIFT STATIONS

VOLUME 8 OF 8
CONSTRUCTION DRAWINGS – CONVEYANCE

THIS PAGE INTENTIONALLY LEFT BLANK FOR DOUBLE SIDED PRINTING

SECTION 40_05_57.24

ELECTRIC ACTUATORS FOR VALVES & GATES

PART 1 GENERAL

1.1 SUMMARY

A. This specification covers the work necessary to furnish and install the various valve & slide gate motor actuators as specified herein and as shown on the plans.

B. To obtain standardization of performance, operation, spare parts, maintenance, and Manufacturer's service, it is the intent of these specifications that all valves of like type be furnished by a single Manufacturer.

C. Spare Parts:
   1. Northside – Provide four total (4) spare shelf actuator for the following locations:
      a. SBR
      b. Headworks gate
      c. Post EQ
      d. 24" influent
   2. Southside - Provide three total (3) spare shelf actuator for the following locations:
      a. Headworks gate
      b. Pumps control valves (x2)

1.2 RELATED SECTIONS

A. Section 01_00_01 Basic Requirements

B. Section 01_33_01 General Submittal Requirements

C. Section 01_33_02 Pre-bid Equipment Submittal Requirements

D. The Contract Documents are a complete unit and complementary to each other. The individual Specification sections and other Contract Documents do not contain all cross references to "related work" or "related sections." It is the Contractor's responsibility to review the complete Contract Documents in order to properly scope, schedule and coordinate the work of any/all subcontractors, suppliers, and others on this project. Anything called out in one location of the Contract Documents is binding as if it were called out in all sections of the Contract Documents.

1.3 SUBMITTALS

A. Submittals for products and miscellaneous items in this specification section shall be submitted in accordance with Section 01_33_01 General Submittal Requirements and related submittal sections and provisions of the Contract Documents.

1.4 DELIVERY, STORAGE & HANDLING

A. Individual equipment components shall be crated in structurally adequate packing containers to prevent damage during shipping, facilitate ease of handling and to provide suitable protection from weather for extended at the jobsite prior to installation. Packing containers shall be permanently labeled with appropriate equipment identification, shipping address and return address. Packing list shall be provided with equipment at time of delivery.

B. Electrical equipment shall be kept thoroughly dry at all times and stored indoors. Equipment storage shall be protected and maintained in accordance with the Manufacturer's recommendations. Equipment shall not be stored directly on the ground.

C. Contractor shall utilize equipment and tools of adequate size suitable for unloading, transporting, storing and supporting the equipment during installation. Caution shall be employed to prevent equipment damage resulting from abrupt contact with other materials or equipment.

PART 2 PRODUCTS

2.1 ELECTRIC MOTOR OPERATORS

A. For the electric operating plug valves shown on the plans provide non-modulating electric motor operators of the close-coupled, electric motor-driven, worm gear type, complete with motor, gearing, limit switches and auxiliary contacts, torque switches, position indicators, hand-wheel, integral controller, and all required appurtenances.

B. The operator shall be mounted in the position as shown on the plans.

C. The motor operators must meet AWWA C540 standards.

D. The valve operators provided must fully open the valve from the closed position in approximately 30 seconds and fully close it in approximately 30 seconds when the differential pressure and flow values specified for the valve and the voltage at the terminals is within 15 percent of the nominal voltage. The operator shall be designed to operate the valve through three consecutive opening and closing cycles or for a period of 15 minutes, whichever is longer, during every 60-minute period, at specified ambient temperature conditions under full differential pressure.

E. The operator shall be designed for outdoor operation and for an ambient temperature range of -20 to 140 degrees F.

F. The operator shall be designed to exert an unseating torque of at least 50 percent in excess of the required disc seating torque at the specified voltage, neglecting hammer-blow effect.

G. The power gearing shall consist of helical or spur gears and worming gear. The helical and spur gears shall be accurately fabricated of machined alloy steel. The hardened alloy steel worm gear shall have the threads ground and polished after heat treating. Worm gear may be constructed of nickel or manganese bronze. Antifriction bearings shall be

utilized throughout. The operator may be lubricated by grease pack or oil bath. The lubricants provided shall be suitable for the ambient temperatures specified.

H. A hand-wheel for manual operation shall be provided and shall have a maximum rim pull of 40 pounds. The hand-wheel shall be designed so that it does not rotate during electrical operation and the motor does not rotate during manual hand-wheel operation. The operator shall be designed so that motor or motor gearing failure does not prevent manual operation. The operator shall be automatically changed from manual operation to electrical operation when the motor is energized and to continue electric operation until the operator is reset to manual operation. A means for locking the drive in either manual or motor operation shall be provided. The hand-wheel shall be removable. An adapter key or drive nut shall be provided to permit operation by a portable operator.

I. A declutching mechanism shall be provided to disengage the motor mechanically by not electrically from motor to hand-wheel operation. If the clutch is of the external lever type, arrange it such that the lever does not move when the motor is energized.

J. An operator-mounted disc position indicator of the mechanical or indicating light type shall be provided. Unless otherwise noted, indicate the fully open, fully closed, and intermediate disc position either mechanically or by lights. For throttling service, provide continuous disc position indication between the fully open and fully closed positions. Electrical contacts shall be provided for remote indication of disc position.

K. The operator motor shall be of the high torque, ball or roller bearing, squirrel-cage type designed for continuous valve duty. The motor shall be rated for 15 minute duty cycle or three complete opening and closing valve strokes, whichever is longer, during a 60 minute period under full differential pressure at 40 degrees C ambient. The motor shall operate on 480 volts, 3-phase electrical service. The motor windings and leads shall have Class F or better insulation with built-in thermal overload protection.

L. The housing for the controls, gears, and motors shall be provided with integrally cast flanges. The flanges and mating surfaces shall be fully machined and template drilled. The joints shall be metal-to-metal or gasket or O-ring sealed as required.

M. The control and motor enclosures shall be NEMA 4 rated, except as otherwise specified. NEMA 7 enclosures shall be provided where explosion-proof construction is shown or specified. The controller shall be provided with mechanical interlocks and mounted as an integral part of the operator. For explosion-proof enclosures which are dependent upon metal-to-metal faces for weatherproofing, include explosion-proof breathers and drains with desiccant type dehumidification and with sufficient silica gel desiccant for 6 months service without requiring renewal. Instructions for desiccant renewal shall be provided. A 2-year supply of desiccant shall be provided.

N. The electrical compartments shall be provided with heaters, unless otherwise specified.

O. The electrical service power required for each operator shall be as shown and specified.

P. A NEMA rated reversing controller, or an approved special duty rated reversing controller, complete with mechanical interlocks and controls as an integral part of the operator shall be provided. Adequate overload protection in the controller or embedded in the motor windings shall be provided. An overload device shall be installed in each phase. If the

overload devices are installed in the motor windings, devices of the bimetallic automatic reset type with contact in the control circuit shall be provided. The internal wiring in the operator shall be arranged so that the opening and closing coils cannot be energized simultaneously at any time, regardless of external wiring conditions.

Q. When the operators are 7 feet or closer to the floor and in an accessible location, the OPEN-STOP-CLOSE push buttons or a selector switch shall be mounted on the operator housing, as shown. The red and green position indicator lights and where shown the amber ready light or MANUAL-AUTO mode selector switch shall be mounted on the operator housing.

R. The operator shall be provided with limit and torque switches, either direct or gear driven. The limit and torque switches shall be adjustable with auxiliary contacts that are operative in either direction of travel. The limit switches shall be "in-step" with the torque switches at all times, whether in motor or manual operation. The operator shall be equipped with limit switches to stop movement in each direction and torque switches for protection against mechanical overload and to stop movement in either direction if an obstruction is encountered. The number, function, and arrangement of the limit switches shall be provided as shown, specified, or required.

S. Additional limit switches, indicating lights, position transmitters and remote position indicators, remote operating controls and other accessories and controls shall be provided where shown, specified, or required.

T. The electric motor actuators shall be M2CP as manufactured by Emerson Process Management(EIM).

PART 3 EXECUTION

3.1 INSTALLATION

A. The Contractor shall assume full responsibility for coordination of the entire project, including verification that all structures, piping, coating systems and equipment components are compatible. The Contractor shall initially operate each equipment system, and shall make all necessary adjustments so that each system is placed in proper operating condition.

B. Equipment and materials utilized for this project must be approved by the Engineer prior to installation. Approval for installation or incorporation in this project will be made only after submittal of Manufacturer's shop and installation drawings, test result certificates or other data as required and specified herein.

C. Installation of equipment shall be in full conformance with the Manufacturer's shop drawings and requirements as approved by the Engineer. Wherever a conflict arises between Manufacturer's instruction and the contract documents, the Contractor shall follow the Engineer's decision at no additional cost to the Owner.

3.2 MANUFACTURER'S SERVICES

A. Provide the services of a Representative of the Manufacturer of the actuators to assist in adjusting and testing the equipment, to supervise initial operation, and to assist in making final adjustments and the tests specified, or which may be necessary to assure the Engineer the equipment is in satisfactory operating condition.

END OF SECTION

THIS PAGE INTENTIONALLY LEFT BLANK FOR DOUBLE SIDED PRINTING

SECTION 40_05_58

SPECIALTY VALVES

PART 1 GENERAL

1.1 SUMMARY

A. Specialty valves and appurtenances. Not all items specified in this section are required in this Contract.

B. Items covered in this specification (may or may not be included)
1. Valve Operators
2. Valves Boxes
3. Sampling Valves
4. Pressure Regulating
5. Pressure Reducing Valves.
6. Solenoid Valves.
7. Ball Valves.
8. Hose Valves.
9. Air Release Valves.
10. Combination Vacuum Relief Air Inlet/Air Release Valve.
11. Slow Closing Air/Vacuum Valve.
12. Reduced Pressure Backflow Preventer.
13. Duckbill Check Valves.
14. Telescoping sludge valves.
15. Pinch valves.
16. Corporation stops.
17. Curb stops.
18. Pressure Relieve Valves.
19. Pressure Sustaining Valves.
20. Surge Relief Valves.
21. Yard Hydrants.

C. Valves shall be same size as pipeline in which installed, with type joints similar to those in respective pipeline unless otherwise shown; flanges faced and drilled to United States of America standard class 125 pattern; bell and spigot of mechanical joints for class 150 pipe; screwed joints for USA standard threads. Valves shall be factory tested to double working pressure. Working pressure and manufacturer's name shall be cast on the valve body.

D. Any Drawing or Specification that conflicts with this Specification section shall be brought to the attention of the Engineer prior to bid. When no clarification is provided the Contractor is to assume that the more restrictive & expensive product/system/item applies and shall be included in the Contractor’s bid.

E. All listed iron and steel products used in this project must be produced in the United States. The term “iron and steel products” means the following products made primarily of iron or steel: lined or unlined pipes and fittings, manhole covers and other municipal castings, hydrants, tanks, flanges, pipe clamps and restraints, valves, structural steel, reinforced

precast concrete, and construction materials. The deminimis and minor components waiver apply to this contract for minor components.

1.2 SUBMITTALS

A. Valve submittals in accordance with Section 01_33_01 and as follows:
   1. Submit drawing or illustration showing unit construction for each type and size valve used.
   2. Submit the following information for each valve:
      a. Specific application in plant expressed in terms of service and Contract Drawing number where shown.
      b. Description, including type of valve, type of operator, and accessories included.
      c. Size.
      d. Maximum non-shock working pressure for which valve is designed when used for water applications.
      e. Materials of construction.
      f. k or Cv value.
      g. Make and model.
   3. If catalog bulletins are used to communicate above information, mark out inapplicable information.
   4. Valves specified to be manufactured in accordance with AWWA and other standards must be submitted with an appropriate affidavit of compliance.

B. Operation and maintenance data:
   1. Furnish bound sets of installation, operation, and maintenance instructions foreach type of manual valve 4 inch in nominal size and larger, and all non- manual valves. Include information on valve operators in operation and maintenance instruction manual.

1.3 REFERENCE STANDARDS

A. American National Standards Institute (ANSI)
   1. ANSI B2.1 – Pipe Threads (except Dryseal).
   2. ANSI B16.1 – Cast Iron Pipe Flanges and Flanged Fittings."

B. American Society of Testing and Materials (ASTM)
   1. ASTM A126 "Specification for Gray Iron Castings for Valves, Flanges, and Pipe Fittings."
   2. ASTM A159 "Specification for Automotive Gray Iron Castings."
   3. ASTM A216 "Specification for Steel Castings, Carbon Suitable for Fusion Welding for High-Temperature Service."
   4. ASTM B62 "Specification for Composition Bronze or Ounce Metal Castings."

C. American Water Works Association (AWWA)
   1. AWWA C507 – Ball Valves, 6-Inch through 48-Inch.
   2. AWWA C509 – Resilient-Seated Gate Valves for Water Supply Service.
   3. AWWA C511 "Backflow Prevention Devices-Reduced Pressure Principle and Double Check Valve Types."
   4. AWWA C512 – Air Release, Air Vacuum, and Combination Air Valves for Waterworks Service.

1.4 QUALITY ASSURANCE

A. Valves and equipment listed herein shall be products of Manufacturers that have a minimum of five years' experience in the manufacture of the particular equipment item to be furnished.

B. Valves and equipment of the same type shall be identical, varying only with size, and the product of one manufacturer.

1.5 MAINTENANCE/SPARE PARTS

A. Special tools and the manufacturer's standard spare parts, if required for normal operation and maintenance, shall be supplied with the equipment.

B. Manufacturer/Supplier shall submit a complete listing of spare parts for all equipment furnished under this section. Spare parts list shall include only spare parts recommended for the first year of operation and a current price list for the Owner to choose which parts will be purchased.

1.6 DESIGN REQUIREMENTS

A. Pressure rating:
   1. Suitable for service under minimum working pressures of 150 pounds persquare inch gauge.
   2. When a piping system is specified in the Piping Schedule to be tested at a pressure greater than 150 pounds per square inch gauge, provide valves forthat piping system with design working pressure which is sufficient to withstand the test pressure

B. Valve to piping connections
   1. Valves 3-inch nominal size and larger: Flanged ends.
   2. Valves less than 3-inch nominal size: Screwed ends.
   3. Plastic valves in plastic piping:
      a. Up to 2.5 inches: Provide solvent or heat welded unions.
      b. 3 inches and above: Provide solvent or heat welded flanges.

PART 2 PRODUCTS

2.1 MATERIALS

A. General
   1. All valves and appurtenances shall be the size shown on the drawings.
   2. All valves and appurtenances shall have the name of the Manufacturer, flow directional arrows, the year the valve casing was made, and working pressure, for example "200W", for which they are designed cast in raised letters upon some appropriate part of the body.
   3. Except as otherwise shown on the drawings or specified herein, all valves with operators located 6 feet or more above the operating floor shall be provided with chain wheel operators complete with chain guides and galvanized steel chain.

4. All buried valves shall open left (counter clockwise). Insofar as possible, all valves shall open counter clockwise.
5. Buried valves and operators, and those located outdoors, partially buried or within maximum of two feet above liquid, or in vaults, or where noted, shall be especially designed to completely submerge the valve and operator. Provide valve position indicator for buried valves.
6. Valves shall have a minimum working pressure of 150 psi, or be of the same working pressure as the pipes they connect to, and suitable for pressure noted where installed.
7. Joints referred to herein shall be of the same type and material as the pipe or fittings they are connected to.
8. Valves and appurtenances shall be of the same nominal diameter as the pipe or fittings they are connected to.
9. All buried valves shall have flanged joint ends, unless noted otherwise on the drawings.
10. End connections to be compatible with those specified for pipe.

B. Valve Operator General Provisions
   1. Furnish geared operators with the following features, unless otherwise specified:
      a. Weatherproof enclosure.
      b. Grease lubricated design.
      c. Closes when turned clockwise.
   2. Paint operators as specified for valves.
   3. Valve and operator nuts and bolts
      a. Fabricated of stainless steel for the following installation conditions:
         1) Submerged in sewage or water.
         2) In an enclosed space above sewage or water.
         3) In structures containing sewage or water, below top of walls.
         4) At openings in concrete or metal decks.
      b. Where dissimilar metals are being bolted, use stainless steel bolts with isolation bushings and washers.
      c. Underground bolts: Low-alloy steel in accordance with AWWA C111/A21.11.

C. Valve Operators
   1. Valve operator "Open" direction: Open counterclockwise.
   2. Provide valves located below operating level or deck with extensions for key operation or floor stands and handwheels.
   3. Provide manually operated valves located not more than 6 feet above the operating level with tee handles, wrenches, or handwheels.
      a. Make the valve operator more conveniently accessible by rolling valves, located more than 5 feet but less than 6 feet above the operating level, toward the operating side.
      b. Secure tee handles and wrenches to the valve head or stem, except where a handle or wrench so secured constitutes a hazard to personnel; in which case, stow handle or wrench immediately adjacent to the valve on or in a suitable hanger, bracket, or receptacle.
   4. Fit valves located more than 6 feet above operating level with chain operated handles or valve wheels.
      a. Chains: Sufficient length to reach approximately 4 feet above the operating level.

b. Where chains constitute a nuisance or hazard to operating personnel, provide holdbacks or other means for keeping the chains out of the way.

5. Provide an operator shaft extension from valve or valve operator to finished grade or deck level when buried valves, and other valves located below the operating deck or level, are specified or indicated on the Drawings to be key operated; provide 2-inch square AWWA operating nut, and box and cover as specified, or a cover where a box is not required.

D. Valve Boxes

1. Cast iron valve boxes extending to the finished or established ground or paved surfaces shall be provided for all buried valves. They shall have suitable base castings to fit properly over the bonnets of their respective valves and heavy top sections with stay-put covers. Minimum 3/16-inch thickness of metal at any point. Boxes shall be of the screw or sliding type having 5-1/4" shaft diameter or greater. Factory painted inside and out with good quality asphalt paint. Covers shall be removable and marked with the class of service. A concrete pad 1"6" x 4" thick slightly above ground surface shall be poured around all valve boxes with name plate as outlined in plan details.
2. Standard extension stem of dimensions required to extend valve stem to required elevation; designed to operate respective valve; complete with coupling and operating nut. Extension stems for underground valves equipped with valve boxes shall be of such length as to extend within 18 to 24 inches from top of valve box and shall be provided with washers or centering plates to facilitate use of operating wrenches.

E. Sampling Valves

1. Type 316 stainless steel wetted parts, hand operated iron crank, piston to extend to innersurface of vessel or pipe, sealed by two compressible replaceable Teflon rings, one above discharge port and other below discharge port, 3/4-inch NPT inlet and 3/4-inch NPT outlet**.**
2. Manufacturers and Products:
   a. Strahman Valves, Inc.; Piston Type Sampling Valve.
   b. Fetterolf Corporation; Rod-Seal Sampling Valve.

F. Pressure Regulating Valves

1. Pressure regulating valves shall be factory tested. Outlet pressure shall be easily field adjustable over the pressure ranges shown on the Drawings.
2. Pressure regulating valves shall meet the criteria noted on the Drawings.
3. Pressure regulating valves shall have flanged connections, or shall have unions mounted in the pipe on each side of the valve.
4. Strainers for installation upstream of pressure regulating valves are specified elsewhere in Division 15. The pressure regulating valve manufacturer shall specify the screen mesh or size of perforations that are required to protect the regulating valve.
5. Pressure Regulating Valves – 3 inch and Larger:
   a. Valves 3 inch and larger and for pressure shall be flanged with globe body, fully bronze mounted, external pilot operated, diaphragm type single seat with seat base equal to size of valve and shall be equal to the Figure 4500D pressure Reducing Valve as manufactured by GA Industries, Inc., PA; Clayton Model 90 as manufactured by Cla-Val Company, CA.

G. Pressure Regulating Valves – 2.5 inch and Smaller
   1. Pressure regulating valves 2.5 inch and smaller shall be rated at the same working pressure as the connecting pipe, with bronze and brass body; renewable stainless-steel seat, and flexible diaphragm of suitable material. Outlet pressure shall be easily field adjustable over the pressure ranges tabulated.
   2. Pressure regulating valves 2.5 inch and smaller shall be Figure No. 43D as manufactured by GA Industries, Inc., PA; Cla-Val Model 90-01/690-01 as manufactured by Cla-Val Company, CA; or approved equal.

H. Solenoid Valves
   1. Solenoid valves shall be packless piston type direct acting, 2-way or 3-way valves and shall be ASCO Valve Red Hat as manufactured by Automatic Switch Co., an equal by Atkomatic Valve Co., Inc., for air and water service.
   2. Valves on water seal lines shall be of the normally closed type, interconnected with pumping unit to shut down if no seal water flow.
   3. Valves shall have forged brass bodies, NPT end connections of the size shown on the Drawings, 300 or 400 series stainless steel internal parts, and Buna n or Ethylene Propylene valve seats. Valves shall have a same working pressure as the connecting pipe and zero minimum operating pressure differentials. Connections shall be threaded.
   4. Except as otherwise specified, valves shall have NEMA 4 solenoid enclosures.
   5. Valves shall be suitable for operation on power supply as provided in the plans and specifications, and shall be provided with a continuous duty Class F coil and a manual operator.
   6. Solenoid valves on bypass piping shall be installed whether shown or not.
   7. Note that solenoid valves may be shown on Electrical and/or Mechanical Drawings, or may only be specified or called out in the details.

I. Ball Valves
   1. Ball valves for PVC piping shall be of PVC Type 1, Grade 1, with union, socket, threaded, or flanged ends as required. PVC ball valves shall be as manufactured by Spears, Nibco, Balon, Hayward Gordon.
   2. Ball valves, except otherwise specified, shall be of ductile iron body and Type 316 stainless steel ball and stem. The valve seat and body seal shall be of TFE. Other hardware shall be of stainless-steel Type 316. Valves shall have 150 psig (minimum) working water pressure. Valves shall have flanged or screwed ends as shown on the drawings, and shall be Model 5150 as manufactured by Jamesbury, an equal by Hills-McCanna.
   3. All valves shall be mounted in such a position that valve position indicators are plainly visible when standing on the floor.

J. Hose Valves
   1. Hose valves for interior (US-1) or handrail mounting (US-2) shall be brassor bronze, Crane 17, Jenkins 112 or 113 with composite disc, or equal. Hose valves for exterior pedestal mounting (US-3) shall be Zurn A-1385, Woodford or equal non-freeze post hydrant. hose valves for exterior wall mounting (US-4) shall be Zurn Z-1310, Woodford or equal anti-siphon non-freeze wall hydrant. All hose valves for use with potable water shall be equipped with vacuum breakers.

K. Air Release Valves

1. Valves shall be installed to release any small accumulations of air, which may collect while the main pipe is in operation and under pressure.
2. The small orifice assembly (Air Release Valve) shall automatically release air accumulations from the pipe while under positive pressure. When the valve body fills with air, the small orifice float ball falls to open the small orifice and exhaust the air to atmosphere. When the air has been exhausted, the small orifice shall be buoyed up and tightly close the small orifice.
3. The small orifice assembly shall be furnished with cast iron body and cover ASTM A126-B. The float ball shall be constructed of stainless-steel ASTM A240, and attached to a stainless-steel lever mechanism. A resilient, Buna-N seat shall be attached to the lever mechanism for drop-tight closure.
4. Separate air release valves shall be Crispin, APCO, Val-Matic, GA Industries, LLC.
5. Valve body shall have a test pressure rating of 300 psi and working pressure rating of 150 psi.

L. Combination Vacuum Relief Air Inlet/Air Release Valve

1. Combination Vacuum Relief/Air Inlet/Air Release Valves shall allow large volume air to escape through the orifice when filling the pipeline and shall shut off water tight, when the water enter the valves. The Combination Air Valve shall also permit large volumes of air to enter through the orifice when the pipeline is being drained to prevent vacuum from forming and water column separation. The valve shall consist of a body, cover, baffle, float and seat. The baffle will be an integral part of the body, designed to protect the float from direct contact of the rushing air and slugs of water to prevent premature shut-off. The seat shall be Buna-N fastened onto the valve cover without distortion and be easily replaced. The float shall be stainless steel and be center guided at each end for positive seating.
2. The Air/Vacuum Valve shall have the outlet threaded or flanged.
3. The Automatic Air Release Valve shall be designed to operate under pressure to allow entrapped air inside the pipeline to escape. The shut-off prevents water from escaping. The Air Release Valve will then stay closed until more air accumulates and the opening cycle will repeat automatically. The Air Release Valve float shall be heavy stainless steel.
4. The valve internals, shall be replaceable, without removing valve from the line and the materials of construction certified, conforming to following ASTM specifications:

Valve Bodies	Cast Iron	ASTM A126 Gr. B
Exterior Primer	Universal Metal Primer	FDA Approved for Potable Water
Float	Stainless steel	ASTM A240
Seats	Buna-N	Nitrile Rubber

5. Valve to be APCO Series 1800 - Combination Vacuum Relief/Air Inlet Valve/Air Release (Flanged Type) Valve manufactured by APCO by Crispin Valve Model AL/PL or Val-Matic Valve and Manufacturing Corp.

M. Slow Closing Air/Vacuum Valves

1. The Slow Closing Air/Vacuum Valve shall be three valves furnished assembled and tested as a single unit.
2. The Air/Vacuum Valve must have a stainless steel float guided at each end with stainless stems. The stems shall be guided through stainless steel bushings inside

the body and cover. The seat must be Buna-N fastened to the cover with stainless shoulder screws without distortion to allow drop tight closure.

3. The covers shall have a male lip to fit the female body register for positive float guide direction into the seat. Cover outlets may be threaded or flanged.
4. The Surge Check Valve shall be a normally open spring-loaded valve consisting of a body, seat and plug bolted to the inlet of the Air/Vacuum Valve. The surge check shall operate on the interphase between the kinetic energy and relative velocity flows of air and water. It will allow air to pass through but water shall actually close the surge check, reducing the rate of water flow by means of throttling orifices in the plug to prevent shock closure of the Air/Vacuum Valve. The surge check orifices must be adjustable type to suit operating conditions in the field.
5. The Air Release Valve shall be side connected to the upper valve, but separated with an Isolation Shut-Off Valve. The internal mechanism shall be the compound lever type to permit the valve to open under pressure to vent pockets of entrapped air as they accumulate. The compound mechanism shall be activated by a stainless steel concave float to lift the Buna-N needle to shut off the Air Release orifice.
6. Product and Manufacturer
    a. Valve to be APCO Series 1700 – Slow Closing Air/Vacuum (Flanged Type) Valve manufactured by APCO.

N. Reduced Pressure Backflow Preventer

1. The reduced pressure backflow preventer, with two independently operated check valves, shall be designed for installation in a normal horizontal flow attitude. An independent relief valve shall be located between the two check valves. They shall be in compliance with AWWA C511 and OAC 252 Regulations.
2. Two reduced pressure backflow preventers shall be installed in parallel for redundancy and ease of maintenance.
3. The reduced pressure backflow preventer shall be designed for installation in the horizontal position.
4. The reduced pressure backflow preventer shall be a complete assembly including UL listed and FM approved OSY shutoff valves and an auxiliary line consisting of an approved backflow preventer. The assembly shall meet the requirements of AWWA C511, ASSE 1013, and CSA B64.
5. The reduced pressure backflow preventer shall be Watts, Zurn, FEBCO.
6. The backflow preventer station shall be installed with a hot box for outdoor installations.
7. The enclosure shall comply with the following criteria:
    a. Totally removable for maintenance purposes.
    b. Structurally lined with a unicellular, non-wicking insulation consisting of a sandwich laminate or applied by spray.
    c. Thermostatically controlled heat source mounted to the interior wall or on the backflow preventer to provide protection to -30°F. Unit shall be 120V, single phase.
    d. No wood or "particle board" shall be allowed in assembly.
    e. No insulation will be mounted with glue.
    f. Power source will be protected with a ground fault circuit interrupting receptacle, UL Standard 943, NEMA 3R inside the box.
    g. Drain openings sized to accommodate the maximum discharge of the reduced pressure zone assembly. Drain openings shall open to discharge under the most severe conditions. These openings are protected against intrusion of either wind, debris, or animal.

h. Provide with means of permanent anchor and "lockable" access doors and/or LID to prohibit theft or vandalism.
i. All "wet" portions of the backflow prevention assembly shall be protected within the enclosure.
j. OSY indicating valve handles shall be maintained outside the enclosure.
k. Factory assembled and delivered to the site ready to install with no drilling, screwing, or riveting of enclosure required on site.
l. The contractor shall be responsible for coordinating the size of the enclosure to accommodate the backflow preventer assembly.
m. Hubbell, Watts or equal.
n. Contractor shall coordinate the size of slab with the enclosure. The slab shall extend beyond the enclosure no less than 4".

8. The enclosure and the backflow preventer shall be covered by a single warranty policy.
9. Pipe outdoors, above grade, and not inside hot box shall be insulated and heat traced.

O. Duckbill Check Valve
1. Check Valves are to be all rubber and the flow operated check type with a flanged end connection. The port area shall contour down to a duckbill which shall allow passage of flow in one direction while preventing reverse flow. The flange and flexible duckbill sleeve shall be one piece rubber construction with nylon reinforcement. The bill portion shall be thinner and more flexible than the valve body, and formed into a curve of 180°.
2. The flange drilling shall conform to ANSI B16.1 Class 125/ANSI B16.5, Class 150 standards. The valve shall be furnished with steel back-up rings for installation.
3. Manufacturer must have available flow test data from an accredited hydraulics laboratory to confirm pressure drop data. Company name, plant location, valve size and serial number shall be bonded to the check valve. Valves shall be manufactured in the USA.
4. When line pressure inside the valve exceeds the backpressure outside the valve by a certain amount, the line pressure forces the bills of the valve open, allow to pass. When backpressure exceeds the line pressure by at the same amount, the bills of the valve are forced closed.
5. Acceptable Manufacturers
a. Tideflex Technologies Inc.
b. EVR

P. Telescoping Sludge Valves
1. Manufacturers: One of the following or equal:
a. Rex Chain Belt.
b. Siemens/Envirex, Telescopic Sludge Valve.
2. Design:
a. Valve assembly including the following:
1) Offset type valve stand.
2) Operating crank or handwheel.
3) Rack and pinion or handwheel shaft and lifting stem.
4) Bearings and bearing guides.
5) Connecting rods.
6) Telescoping tube with removable adapter.
7) Pipe flange.

8) O-ring seal.

b. Rising racks:

1) Equip with covers and indicators to show position of telescoping tube.

2) Valves shall be adjustable in 1/4-inch nominal increments.

c. Telescoping tubes: Provide with a 2-U notch at the top of the tube, with stemrods adequately fixed for travel in a true, vertical line.

d. Provide stops in the valves to prevent lifting the telescoping tube to the base ofthe valve stand, and design to prevent damage to equipment by forcing the handwheel.

3. Materials:

a. Valve stand: Cast-iron or fabricated steel.

b. Rack and pinion or handwheel shaft and stem: Steel.

c. Tube and adapter: Schedule 40, Type 316 stainless steel.

d. Pipe flange: Cast iron.

e. Gaskets: Neoprene.

Q. Pinch Valves

1. Manufacturers:

a. Red Valve Company, Series 80 with Type DW sleeves.

b. RKL Controls, Inc., Series KEFR.

c. Onyx Valve, equivalent product.

2. Design: Open frame handwheel type.

3. Materials:

a. Sleeve material: Suitable for operation requiring continuous opening and closing of the valve.

b. Sleeves: Teflon reinforced with butyl nylon or other equivalent reinforcing material.

R. Corporation Stops

1. Type: In accordance with AWWA C800.

a. Manufacturers: One of the following or equal:

1) Ford.

2) Mueller Company.

S. Curb Stops

1. Manufacturers: One of the following or equal:

a. Ford.

b. Mueller Company.

2. Description: Round way solid tee head stops.

T. Pressure Relief Valves

1. Pressure relief valves shall meet the criteria noted on the Drawings.

2. Pressure relief valves shall be designed to relieve excess pressure that may occur in the line or system even with back pressure or head pressure on the downstream side.

3. Pressure Relief Valves – 4 inches or smaller:

a. Valves 4 inch and smaller shall be PVC body threaded in-line 3-port valves with PTFE/EPDM diaphragm and have an adjustable screw to obtain the

selected line or tank relief pressure and shall be equal to G-Series Pressure Relief Valve as manufactured by Griffco Valves Inc., or equal.

b. The valve starts to open as line pressure approaches the set pressure until fully open. The valve shall be capable of relieving pressure between 0-250 psi.

c. There shall be no metal in contact with the fluid.

d. Contractor shall route piping from relief side of third port to containment area and terminate 2" above finished floor, whether shown in the Contract Drawings or not.

U. Pressure Sustaining Valves

1. Pressure sustaining valves shall be factory tested. Outlet pressure shall be easily field adjustable over the pressure ranges tabulated below.
2. Pressure sustaining valves shall meet the criteria noted on the Drawings.
3. Pressure sustaining valves shall have flanged connections, or shall have unions mounted in the pipe on each side of the valve.
4. Pressure Sustaining Valves – 3 inch and Larger:
   a. Valves 3 inch and larger and for pressure shall be flanged with globe body, fully bronze mounted, external pilot operated, diaphragm type single seat with seat base equal to size of valve and shall be equal to the Figure 4700D pressure Reducing Valve as manufactured by GA Industries, Inc., PA; Clayton Model 50 as manufactured by Cla-Val Company, CA.
   b. The valve shall be packed with leather or some other material acceptable to the Owner's Representative to insure tight closure and prevent metal to metal friction and sticking. The valve shall be furnished with indicator rod, to show position of opening of the piston, and pet cocks for attachment to valve body for receiving gauges for testing purposes.
   c. Pilot valve, controlling operation of main valve, shall be easily accessible and so arranged to allow for its removal from the main valve, while the main valve is under pressure. The pilot valve shall be easily adjustable without removal of the springs, weights or use of special tools. Control piping on the valves shall have strainers to prevent plugging of control mechanisms.
   d. Design shall be such that repairs or dismantling internally of main valve may be made without its removal from the line.
   e. The flanges shall have the same pressure rating as the connecting pipe. The valve body shall be constructed of cast iron.
   f. The valve shall maintain pre-adjusted upstream pressure for varying rates of flow through the positioning of the piston by the pilot without causing water hammer and without causing waste of water, and without cavitation.

V. Surge Relief Valves

1. The valve manufacturer shall submit to the Owner's Representative calculations confirming that unit's size is proper for the system to be installed.
2. Surge relief valves shall function to open when the system pressure exceeds the pressure for which the field adjustable pilot valve is set. Valves shall open rapidly and close slowly at a predetermined rate of speed. Provision shall be made to regulate the closing speed of the valves. The valves shall be completely piped ready for installation.

3. The main valve shall operate on the differential piston principle such that the area on the underside of the piston is no less than the pipe area and the area on the upper surface of the piston is of a greater area than the underside of the piston. No diaphragm will be permitted within the main valve body.
4. The valve piston shall be guided on its outside diameter by long stroke stationary Vee ports which shall be downstream of the seating surface to minimize the consequences of throttling. Throttling shall be accomplished by the valve Vee ports and not the valve seating surfaces.
5. The valve shall be capable of operating in any position and shall incorporate only one flanged cover at the valve top from which all internal parts shall be accessible. There shall be no stems, stem guides, or spokes within the waterway. There shall be no springs to assist the valve operation.
6. The valve body shall be of cast iron ASTM A126 with flanges and pressure rating as noted. The valve shall be extra heavy construction throughout. The valve interior trim shall be bronze, ASTM B62, as well as the main valve operation. The valve seals shall be easily renewable. All controls and piping shall be of non-corrosive construction. A visual valve piston position indicator shall be provided.
7. Valve shall be Figure 6700-DL (Globe Type) by GA Industries; or Series 3000 (angle-pattern) or Model 50RWR by Ross Valve.

W. Yard Hydrants

1. Yard hydrants shall be 2 inches, non-freezing and self-draining. Hydrants shall have a 2-inch NST nozzle outlet.
2. Hydrant shall be operated by turning a top-mounted operating nut counterclockwise to open, clockwise to close. Hydrants must seal the drain outlet in all positions from ¼-open to fully-open.
3. An anti-vandal locking mechanism shall be provided, which shall also serve as an operating wrench. Six operating wrenches of suitable size shall be furnished to operate all yard hydrants.
4. All internal working parts, the inlet, and the outlet shall be brass or aluminum. All working parts shall be serviceable from above ground with no digging required. All wear parts (o-rings and valve seat) shall be of commonly-available dimensions and materials, none may be of vendor-unique design.
5. Hydrant shall be designed to break away at grade level in event of significant impact. Outlet nozzle shall be able to point in any of 8 redial directions. Hydrants shall be designed to accept field-installed grade-change modifications.
6. Yard hydrants shall be set at the locations as shown in the Drawings and shall have a depth of bury that will meet the elevations given in the Drawings.
7. Yard hydrants shall be painted to match the water system it is attached to.
8. Caution sign shall be provided on each yard hydrant connected to the plant water system. Signs shall be of the plastic laminate type, suitable for outdoor application. The signs shall be a minimum of 1/8-inch thickness. Laminate shall be red in white. Signs shall be mounted to the yard hydrants using stainless steel no. 16 single jack chain. Signs shall be square cornered, approximately 3-inch by 8- inch with the following engraved text in 3/4-inch-high letters: PLANT WATER – UNFIT FOR DRINKING.
9. Yard hydrant shall be a 2” non-freezing type TF200 series by Kupferle.

2.2 SHOP PAINTING

1. A. Surface preparation and shop painting shall be as specified in Section 09900 – Painting and Coating.

PART 3 EXECUTION

3.1 INSTALLATION GENERAL

A. Prior to installation, valves shall be inspected for direction of opening, freedom of operation, rightness of pressure containing bolting, cleanliness of valve parts and especially seating surfaces, handling damages and cracks. Gate valves found to be defective shall be replaced with no additional expense to the Owner.

B. Valves shall be installed in the closed position to prevent inadvertent entry of foreign materials into the valve. Gate valves shall be set plumb and installed where shown on the Plans or as directed by the Engineer. Where feasible, valves shall be located outside the paved areas of roads and streets.

C. A valve box shall be provided for every underground valve. The valve box shall not transmit shock or stress to the valve and shall be centered over the operating nut of the valve. The box cover shall be set flush with the surface of the finished area or such other level as may be directed by the Engineer.

D. The valve assembly shall include all materials and labor required to install and complete the necessary components for a complete and operational valve installation.

E. All underground valves shall have metallic tracing wire and appurtenances installed in accordance with Underground Utility Locator System.

F. Items shall be installed per Manufacturer's instructions in the locations shown. Any damage to items shall be repaired to the satisfaction of the Owner's Representative before they are installed.

G. Install brackets, extension rods, guides, the various types of operators and appurtenances as shown on the Drawings that are in masonry floors or walls, and install concrete inserts for hangers and supports as soon as forms are erected and before concrete is poured. Before setting these items, check Drawings, which have a direct bearing on their location and be responsible for the proper location of these appurtenances during the construction of structures.

H. Items shall be carefully inspected for defects in construction and materials; debris and foreign material cleaned out of openings, etc.; operating mechanisms operated to check their proper functioning, and nuts and bolts checked for tightness. Equipment, which does not operate easily, or is otherwise defective, shall be repaired or replaced at no additional cost to the Owner.

I. Where installation is covered by a referenced Standard Specification, installation shall be in accordance with that Specification, except as herein modified.

J. Unless otherwise noted, joints for items shall be made up utilizing the same procedures as specified under the applicable type connecting pipe joint.

K. The installation of reduced pressure backflow preventers shall meet Oklahoma Department of Environmental Quality standards.

1. Reduced pressure backflow preventers shall be installed above grade. An enclosure shall be provided to protect the device from freezing for outdoor installations.
2. Two reduced pressure backflow preventers shall be installed in parallel for redundancy and ease of maintenance.

L. Provide incidental work and materials necessary for installation of valves includingflange gaskets, flange bolts and nuts, valve boxes and covers, concrete bases, blocking, and protective coating.

M. Where needed, furnish and install additional valves for proper operation and maintenance of equipment and plant facilities under the following circumstances:
1. Where such additional valves are required for operation and maintenance ofthe particular equipment furnished by Contractor.
2. Where such additional valves are required as a result of a substitution orchange initiated by Contractor.

N. Install valves with their stems in vertical position above the pipe, except as follows:
1. Butterfly valves, gate valves aboveground, globe valves, ball valves, and angle valves may be installed with their stems in the horizontal position.
2. Install buried plug valves with geared operators with their stems in a horizontal position.

O. Install valves so that handles clear obstructions when the valves are operated fromfully open to fully closed.

P. Place top of valve boxes flush with finished grade or as otherwise indicated on theDrawings.

Q. Valves with threaded connections:
1. Install valves by applying wrench on end of valve nearest the joint to prevent distortion of the valve body.
2. Apply pipe joint compound or Teflon tape on external (male) threads to prevent forcing compound into valve seat area.

R. Valves with flanged connections:
1. Align flanges and gasket carefully before tightening flange bolts.
2. When flanges are aligned, install bolts and hand tighten.
3. Tighten nuts opposite each other with equal tension before moving to next pairof nuts.

S. Backflow preventers:
1. Install with a minimum clearance of 12 inches and with maximum clearance of30 inches between the relief port and the floor or finished grade.
2. Install with sufficient side clearance for access for testing and maintenance.
3. Recertify all new backflow preventers after installation, start-up, and testing.

T. Plastic body diaphragm valves for sodium hypochlorite service:
1. When valves are installed horizontally, install valves with valve stem position rotated as necessary such that no internal valve obstruction prevents the passage of vapors traveling along the top of adjacent piping from traveling through the valve.

U. Flow control valves:
1. Install orifice in accordance with manufacturer's requirements.

3.2 STORAGE AND HANDLING

A. All valves should be unloaded carefully. The valve should be carefully lowered from the truck to the ground, not dropped. In the case of larger valves, fork trucks or slings around the body of the valve or under the skids should be used for unloading. Only hoists and slings with adequate load capacity to handle the weight of the valve or valves should be used. Do not hook hoists into or fasten chains around bypasses, yokes, gearing, motors, cylinders, or hand wheels.

B. Valves should be inspected at the time of receipt for damage in shipment. The initial inspection should verify compliance with specifications, direction of opening, size and shape of operating nut, number or turns, and type of end connections. A visual inspection of gate rings and body rings should be performed to detect any damage in shipment or scoring of the seating surfaces. Inspection personnel should look for bent stems, broken hand wheels, cracked parts, missing parts and accessories, and any other evidence of mishandling during shipment. The valve should be cycled through one complete opening and-closing cycle. All valves sixteen (16") inches and larger should be operated through one full operating cycle in the position in which they are to be installed.

C. Valves should be stored in the fully closed position to prevent entry of foreign material that could cause damage to the seating surfaces. Whenever practical, valves should be stored indoors. If outside storage is required, means should be provided to protect the operating mechanisms, such as gears, motor operators, and cylinders, from the weather and foreign materials. If valves may be subject to freezing temperatures, remove water from the valve interior and close the gates tightly before storage. Valves in outside storage in cold climates should be stored with the discs in a vertical position; if the discs are in a horizontal flat position, rain water can accumulate on top of the top disc, seep into the valve body cavity, freeze, and crack the casting. Any valves damaged by weather will not be installed.

3.3 FIELD TESTING

A. After installation, all valves and appurtenances shall be tested at the same duration and pressure as the piping system they are in.

B. During the field testing any defective valve or appurtenance shall be adjusted, removed and replaced, or otherwise made acceptable to the Owner's Representative and Owner by the Contractor.

END OF SECTION

THIS PAGE INTENTIONALLY LEFT BLANK FOR DOUBLE SIDED PRINTING

SECTION 40_05_59.23

STAINLESS STEEL GATES

PART 1 GENERAL

1.1 SUMMARY

A. Stainless steel sluice, channel, and downward opening weir gates, and appurtenances as shown on the Contract Drawings and as specified herein.

B. The gates and appurtenances shall be supplied in accordance with the latest edition of AWWA C561 Standard for Fabricated Stainless Steel Slide Gates as modified herein. The allowable leakage rate for the stainless steel gates in this specification shall be 1/2 the allowable leakage listed in the latest revision of AWWA C561.

C. Any Drawing or Specification that conflicts with this Specification section shall be brought to the attention of the Engineer prior to bid. When no clarification is provided the Contractor is to assume that the more restrictive & expensive product/system/item applies and shall be included in the Contractor's bid.

D. All listed iron and steel products used in this project must be produced in the United States. The term "iron and steel products" means the following products made primarily of iron or steel: lined or unlined pipes and fittings, manhole covers and other municipal castings, hydrants, tanks, flanges, pipe clamps and restraints, valves, structural steel, reinforced precast concrete, and construction materials. The deminimis and minor components waiver apply to this contract for minor components.

1.2 RELATED SECTIONS

A. Section 01_00_01 Basic Requirements

B. Section 01_33_01 General Submittal Requirements

C. The Contract Documents are a complete unit and complementary to each other. The individual Specification sections and other Contract Documents do not contain all cross references to "related work" or "related sections." It is the Contractor's responsibility to review the complete Contract Documents in order to properly scope, schedule and coordinate the work of any/all subcontractors, suppliers, and others on this project. Anything called out in one location of the Contract Documents is binding as if it were called out in all sections of the Contract Documents.

1.3 SUBMITTALS

A. Submittals for products and miscellaneous items in this specification section shall be submitted in accordance with Section 01_33_01 General Submittal Requirements and related submittal sections and provisions of the Contract Documents.

B. Provide the following information to confirm compliance with the specification in addition to the submittal requirements.

1. Complete description of all materials including the material thickness of all structural components of the frame and slide.
2. Installation drawings showing all details of construction, details required for installation, dimensions and anchor bolt locations.
3. Maximum bending stress and deflection of the slide under the maximum design head.
4. The location of the company headquarters and the location of the principle manufacturing facility. Provide the name of the company that manufactures the equipment if the supplier utilizes an outside source.

1.4 DELIVERY, STORAGE AND HANDLINGS

A. Individual equipment components shall be crated in structurally adequate packing containers to prevent damage during shipping, facilitate ease of handling and to provide suitable protection from weather for extended storage at the jobsite prior to installation. Packing containers shall be permanently labeled with appropriate equipment identification, shipping address and return address. Packing list shall be provided with equipment at time of delivery.

B. Contractor shall utilize equipment and tools of adequate size suitable for unloading, transporting, storing and supporting the equipment during installation. Caution shall be employed to prevent equipment damage resulting from abrupt contact with other materials or equipment. Any damage to surface incurred during shipment and /or installation shall be repaired to the satisfaction of the Engineer prior to installation.

C. Pumps, cables, and electrical equipment shall be kept thoroughly dry at all times, shall be stored indoors, and protected from freezing conditions. Equipment shall not be stored directly on the ground. Equipment storage shall be protected and maintained in accordance with the manufacturer's recommendations. Equipment is in storage when:
   1. It has been delivered to the jobsite and is awaiting installation.
   2. It has been installed, but operation is delayed pending completion of the project.
   3. There has been long period between operation cycles (30 days or more).

D. Improper storage could result in product failure or restoration not covered by warranty. Contractor shall be solely responsible for any damage to equipment during storage as described above. If Contractor fails to store as required by manufacturer and supplier, and the warranty is voided due to such failure, equipment is automatically rejected by Owner/Engineer. Payment made to the Contractor under Stored Materials will be deducted from next monthly payment to the Contractor. New equipment shall be ordered and paid for by the Contractor for the project and at no cost to the Owner.

1.5 QUALITY ASSURANCE

A. Qualifications
   1. All of the equipment specified under this Section shall be furnished by a single manufacturer with a minimum of 20 years experience designing and manufacturing water control gates. The manufacturer shall have manufactured water control gates for a minimum of 100 projects.
   2. The specification is based on the 900 Series Stainless Steel Gates as manufactured by Whipps, Inc. of Athol, Massachusetts, or, equal.

3. The sizes and types of gates, as well as the type of actuator, shall be as shown on the gate schedule.

B. The fully assembled gates shall be shop inspected and tested for operation before shipping.

C. The manufacturer shall be ISO 9001 certified.

1.6 WORKMANSHIP

A. The Contractor shall install equipment and materials in a workmanlike manner utilizing craftsmen skilled in the particular trade. The finished installation shall portrait a neat and plumb appearance.

B. Before installation, carefully clean equipment of all foreign material, adjust stuffing boxes, and inspect equipment. Install equipment in accordance with the applicable portions of the Specifications. Installation practices shall conform to Manufacturer's recommendations.

C. Any evidence of improper installation shall be corrected by the Contractor. Care during storage, installation and startup shall be in strict accordance with manufacturer's recommendations.

1.7 COORDINATION

A. General Contractor shall provide skilled supervision and coordination between all personnel (sub-contractors and employees) to make sure that installed equipment is easy to operate and maintain.

B. Contractor is responsible for coordination between trades.

C. The Contractor shall assume full responsibility for coordination of the entire project, including verification that all structures, piping, anchor bolts, coating systems and equipment components are compatible. The Contractor shall initially operate each equipment system, and shall make all necessary adjustments so that each system is placed in proper operating condition.

D. Electrical connections, power supply, conduit runs, and anchor bolt installation shall be coordinated and supervised by Prime Contractor and checked for proper installation per manufacturer's recommendations.

1.8 WARRANTY

A. The Manufacturer shall warrant the equipment to be of quality construction, free from defects in materials and workmanship. The warranty shall become effective upon Final Acceptance of the entire project by the Owner.

B. B. The equipment, apparatus, and parts furnished shall be warranted for a period of one (1) year, excepting only those items that are normally consumed in service. The Manufacturer and the Contractor shall be solely responsible for the warranty of the equipment and all non-consumable components.

C. Components failing to perform as specified by the Engineer, or as represented by the Manufacturer, or proven to be defective in service during the warranty period, shall be replaced, repaired, or satisfactorily modified by the Manufacturer without any additional costs to the Owner.

PART 2 EQUIPMENT

2.1 GENERAL

A. Gates shall be as specified herein and have the characteristics and dimensions shown on the Contract Drawings.

B. Leakage shall not exceed 0.05 US gpm/ft of wetted seal perimeter in seating head and unseating head conditions.

C. The gate shall utilize self-adjusting seals. Due to the difficulty of accessing gates when they are in service, gates that utilize adjustable wedges, wedging devices or pressure pads are not acceptable.

D. The gate's sealing system should have been tested through a cycle test in an abrasive environment and should show that the leakage requirements are still maintained after 25,000 cycles with a minimum deterioration.

E. All structural components of the frame and slide shall be fabricated of stainless steel having a minimum thickness of 1/4-inch and shall have adequate strength to prevent distortion during normal handling, during installation and while in service.

F. All welds shall be performed by welders with AWS certification.

G. Finish: Mill finish on stainless steel. Welds shall be sandblasted to remove weld burn and scale. All iron and steel components shall be properly prepared and shop coated with a primer.

H. Materials:

Component	Materials
Frame Assembly & Retainers	Stainless Steel, Type 316 L, ASTM A240
Slides & Stiffeners	Stainless Steel, Type 316 L, ASTM A240
Stem	Stainless Steel, Type 316 L, ASTM A276
Fasteners, Nuts & Bolts	Stainless Steel, Type 316 L, ASTM A276
Invert Seal (Upward Gates)	Neoprene ASTM D-2000 or EPDM
Seats/Seals & Facing	Ultra-High Molecular Weight Polyethylene ASTM D4020
Lift Nuts	Bronze ASTM B584
Pedestals & Brackets	Stainless Steel, Type 316 L, ASTM A276
Operator Housing	Cast aluminum or ductile iron

2.2 FRAME

A. The frame assembly, including the guide members, invert member and yoke members, shall be constructed of formed stainless steel plate with a minimum thickness of 1/4-inch.

1. Frame design shall allow for mounting directly to a wall with stainless steel anchor bolts and grout or mounting to a wall thimble with stainless steel mounting studs and a mastic gasket material. Mounting style shall be as shown on the Contract Drawings.
2. All wall mounted or wall thimble mounted gates shall have a flange frame. Flat frame gates are not acceptable.
3. The structural portion of the frame that incorporates the seat/seals shall be formed into a one-piece shape for rigidity. Guide members that consist of two or more bolted structural members are not acceptable. Guide member designs where water loads are transferred through the assembly bolts are specifically not acceptable.
4. Gussets shall be provided as necessary to support the guide members in an unseating head condition. The gussets shall extend to support the outer portion of the guide assembly and shall be positioned to ensure that the load is transferred to the anchor bolts or the wall thimble studs.
5. The frame shall extend to accommodate the entire height of the slide when the slide is in the fully closed or fully opened position.
6. On self-contained gates, a yoke shall be provided across the top of the frame. The yoke shall be formed by two structural members affixed to the top of the side frame members to provide a one- piece rigid assembly. The yoke shall be designed to allow removal of the slide.
7. A rigid stainless steel invert member shall be provided across the bottom of the opening. The invert member shall be of the flush bottom type.
8. A rigid stainless steel top seal member shall be provided across the top of the opening.

2.3 SLIDE

A. The slide and reinforcing stiffeners shall be constructed of stainless steel plate. All structural components shall have a minimum thickness of 1/4-inch.
   1. The slide shall not deflect more than 1/360 of the span or 1/16 inch, whichever is smaller, under the maximum design head.
   2. When the width of the gate opening multiplied by the maximum design head is 80 square feet or greater, the portion of the slide that engages the guide members shall be of a "thick edge" design. The thick edge portion of the slide that engages the guide shall have a minimum thickness of 3 inches.
   3. Reinforcing stiffeners shall be welded to the slide and mounted horizontally. Two vertical stiffeners shall be welded on the outside of the horizontal stiffeners for additional reinforcement.
   4. The stem connector shall be constructed of two angles or plates. The stem connector shall be welded to the slide. A minimum of two bolts shall connect the stem to the stem connector.

2.4 SEALS

A. All gates shall be provided with a self-adjusting seal system to restrict leakage in accordance with the requirements listed in this specification.
   1. All gates shall be equipped with UHMW polyethylene seat/seals to restrict leakage and to prevent metal to metal contact between the frame and slide.
   2. The seat/seals shall extend to accommodate the 1-1/2 x the height of the slide when the slide is in the fully closed or fully opened position.

3. All sluice gates shall be provided with a resilient seal to seal the bottom portion of the gate. The seal shall be attached to the invert member of the frame or the bottom of the slide and it shall be held in place with stainless steel attachment hardware.
4. The seal system shall be durable and shall be designed to accommodate high velocities and frequent cycling without loosening or suffering damage.
5. All seals must be bolted or otherwise mechanically fastened to the frame or slide. Arrangement with seals that are force fit and/or held in place with adhesives are unacceptable.
6. The seals shall be mounted so as not to obstruct the water way opening.
7. Gates that utilize rubber "J" seals or "P" seals are not acceptable.
8. The seal system shall have been factory tested to confirm negligible wear (less than 0.0 l") and proper sealing. The factory testing shall consist of an accelerated wear test comprised of a minimum of 25,000 open-close cycles using a well-agitated sand/water mixture to simulate fluidized grit.

2.5 STEM

A. A threaded operating stem shall be utilized to connect the operating mechanism to the slide. On rising stem gates, the threaded portion shall engage the operating nut in the manual operator or motor actuator. On non- rising stem gates, the threaded portion shall engage the nut on the slide.
1. The threaded portion of the stem shall have a minimum outside diameter of 1-1/2 inches. Stem extension pipes are not acceptable.
2. The stem shall be constructed of solid stainless steel bar for the entire length, the metal having a tensile strength of not less than 90,000 psi for stems that are 3 inches or less in diameter. Stems that are in excess of 3 inches in diameter shall have a tensile strength of 85,000 psi.
3. The stem shall be threaded to allow full travel of the slide unless the travel distance is otherwise shown on the Contract Drawings.
4. Maximum L/R ratio for the unsupported part of the stem shall not exceed 200.
5. In compression, the stem shall be designed for a critical buckling load caused by a 40 lb effort on the crank or handwheel with a safety factor of 2, using the Euler column formula.
6. The stem shall be designed to withstand the tension load caused by the application of a 40 lb effort on the crank or handwheel without exceeding 1/5 of the ultimate tensile strength of the stem material.
7. The threaded portion of the stem shall have machine rolled threads of the full Acme type with a 16-microinch finish or better. Stub threads are not acceptable.
8. Stems of more than one section shall be joined by stainless steel or bronze couplings. The coupling shall be bolted to the stems.
9. Stems, on manually operated gates, shall be provided with adjustable stop collars to prevent over closing of the slide.

2.6 STEM GUIDES

A. Stem guide shall be provided when necessary to ensure that the maximum L/R ratio for the unsupported part of the stem is 200 or less.
1. Stem guide brackets shall be fabricated of stainless steel and shall be outfitted with UHMW or bronze bushings.
2. Adjustable in two directions.

2.7 WALL THIMBLES

A. Wall thimbles shall be provided when shown on the Contract Drawings.
   1. The wall thimble depth shall be equal to the thickness of the concrete wall in which the thimble is to be mounted.
   2. Wall thimbles shall be fabricated stainless steel construction of adequate section to withstand all operational and reasonable installation stresses.
   3. Wall thimbles shall be constructed of 1/4-inch minimum thickness stainless steel and the front face shall also have a minimum thickness of 1/4-inch.
   4. The fabrication process shall ensure that the wall thimble is square and plumb and the front face is sufficiently flat to provide a proper mounting surface for the gate frame.
   5. The face of the wall thimble shall only be machined if recommended by the gate manufacturer. If the wall thimble is to be machined, the front face shall have a minimum thickness of 1/4-inch after machining.
   6. A water stop shall be welded around the periphery of the thimble. Wall thimbles shall be designed to allow thorough and uniform concrete placement during installation.
   7. Studs and nuts shall be stainless steel.
   8. A suitable gasket or mastic shall be provided to seal between the gate frame and the wall thimble.

2.8 MANUAL OPERATORS

A. Gates shall be operated by a manual handwheel or a manual crank-operated gearbox (see schedule). The operator shall be mounted on the yoke of self-contained gates or on the pedestal of non-self-contained gates.
   1. The gate manufacturer shall select the proper gear ratio to ensure that the gate can be operated with no more than a 40 lb effort when the gate is in the closed position and experiencing the maximum operating head.
   2. An arrow with the word "OPEN" shall be permanently attached or cast onto the operator to indicate the direction or rotation to open the gate.
   3. Handwheel operators shall be fully enclosed and shall have a cast aluminum housing.
      a. Handwheel operators shall be provided with a threaded cast bronze lift nut to engage the operating stem.
      b. Handwheel operators shall be equipped with roller bearings above and below the operating nut.
      c. Positive mechanical seals shall be provided above and below the operating nut to exclude moisture and dirt and prevent leakage of lubricant out of the hoist.
      d. The handwheel shall be removable and shall have a minimum diameter of 15 inches.
   4. Crank-operated gearboxes shall be fully enclosed and shall have a cast aluminum or ductile iron housing,
      a. Gearboxes shall have either single or double gear reduction depending upon the lifting capacity required.
      b. Gearboxes shall be provided with a threaded cast bronze lift nut to engage the operating stem.
      c. Bearings shall be provided above and below the flange on the operating nut to support both opening and closing thrusts.

d. Gears shall be steel with machined cut teeth designed for smooth operation.
e. The pinion shaft shall be stainless steel and shall be supported on ball or tapered roller bearings.
f. Positive mechanical seals shall be provided on the operating nut and the pinion shafts to exclude moisture and dirt and prevent leakage of lubricant out of the hoist.
g. The crank shall be cast aluminum or cast iron with a revolving nylon grip.
h. The crank shall be removable.

5. An extended operator system utilizing chain and sprockets shall be furnished by the manufacturer when the centerline of the crank or handwheel, on a non-geared operator, is located over 48-in above the operating floor. Chain wheels are not acceptable.
   a. A removable stainless steel or aluminum cover shall be provided to enclose chain and sprockets.
   b. The extended operator system shall lower the centerline of the pinion shaft to 36-in above the operating floor.
   c. A handwheel may be utilized in conjunction with a gearbox in lieu of the extended operator system if the centerline of the pinion shaft is 60-in or less above the operating floor.
6. Pedestals shall be constructed of stainless steel. Aluminum pedestals are not acceptable.
   a. The pedestal height shall be such that the handwheel or pinion shaft on the crank-operated gearbox is located approximately 36-in above the operating floor.
   b. Wall brackets shall be used to support floor stands where shown on the Drawings and shall be constructed of stainless steel.
   c. Wall brackets shall be reinforced to withstand in compression at least two times the rated output of the operator with a 40 lb effort on the crank or handwheel.
   d. The design and detail of the brackets and anchor bolts shall be provided by the gate manufacturer and shall be approved by the ENGINEER. The gate manufacturer shall supply the bracket, anchor bolts and accessories as part of the gate assembly.
7. Operators shall be equipped with fracture-resistant clear butyrate or lexan plastic stem covers.
   a. The top of the stem cover shall be closed.
   b. The bottom end of the stem cover shall be mounted in a housing or adapter for easy field mounting.
   c. Stem covers shall be complete with indicator markings to indicate gate position.
8. When shown on the Contract Drawings, provide 2 inch square nut, mounted in a floor box, with a non-rising stem.
   a. The square nut shall be constructed of bronze.
   b. The floor box shall be constructed of stainless steel or cast iron and shall be set in the concrete floor above the gate as shown.
   c. Provide one aluminum or stainless steel T-handle wrench for operation.

2.9 ELECTRIC MOTOR ACTUATORS

A. General: The electric actuator shall be of the top mounted configuration and shall include (as one integral unit) but not limited to, the electric motor, reduction gearing, drive bushing or top entry stem nut, torque switches, position limit switches, gear case and auxiliary handwheel. The electric actuator shall be Factory Mutual approved for hazardous locations. The actuator shall be EIM Series 2000.

1. Gears: Reduction shall be accomplished by means of a two stage gear train consisting of first stage spur of helical and second stage of self-locking worm and worm gear. Gear housing shall be ductile iron. Spur gears and worms shall be steel. Worm gear shall be bronze. Non-metallic gears in power train are not acceptable.
2. Hammer Blow: When required by the unseating application, a lost motion device (independent of gear backlash) shall be supplied integral in the actuator gear train. This device shall allow the motor to attain full speed before the load is encountered.
3. Bearings: All gears and shafting shall be supported on unit-friction bearings. Where thrust is a consideration, tapered roller bearings (to accept thrust) shall be provided.
4. Lubrication: All gearing and bearings shall be grease or oil lubricated. Seals shall be provided at all exit points of the gear case to prevent leakage of lubricant. Critical area subject to high wear shall be double sealed. Lubricants shall be suitable for year-round service based on ambient temperature conditions. Special attention should be paid to environments with temperatures below 0 F.
5. Handwheel: The actuator shall be equipped with a handwheel for manual operation, so connected that operation by the motor shall not cause the handwheel to rotate. Should power be returned to the motor while the handwheel is in use, the design of the unit shall prevent transmission of the motor torque to the handwheel. Use of the handwheel shall not negate the hammer-blow feature. The handwheel shall require an effort of no more than 80 pounds on the rim for seating or unseating load, or 60 pounds for running load. The handwheel shall have an arrow and the word "Open" indicating required rotation. The handwheel shall operate in the clockwise direction to close. External declutch lever will be padlockable in either the manual (handwheel) or motor mode.
6. Motor: Electric motors shall be specially designed for valve actuator service, and shall be totally enclosed nonventilated. As a minimum, the electric motor enclosure shall meet NEMA 4 weatherproof construction. When specified, motor enclosure(s) shall be available to meet submersible NEMA 6 or NEMA 7 explosion proof Class 1, Group D, Div. 1 or 2 requirements. Motors shall be capable of operating through one complete cycle, open-close-open or under the maximum specified operating conditions when voltage to the motor is + or - 10 percent of the specified voltage. Motors shall have a Class F insulation with Class B temperature rise. Overload protection shall be by means of inherent motor thermal sensors embedded in the windings.
7. Limit Switches: Open and close limit switches shall be geared to the drive mechanism and in step at all times, whether the unit is operated electrically or manually. The switches shall be of the rotary drum wiping action contact type, field adjustable, and capable of being set either fully open, fully closed, or at any intermediate point. Limit switch contacts shall be solid silver and have a minimum rating of 10 amps (break) inductive at 120 VA-c. Limit switch gearing shall be grease lubricated. The drive mechanism shall be totally enclosed to prevent

entrance of foreign matter. Gears shall be steel. Use of cams or set screws in securing switches or the drive system is unacceptable.

8. Torque Switches: The actuator shall include an adjustable torque (and thrust where applicable) limiting switch arrangement to break the control power circuit when:
9. The valve has reached the stops in the open or close position.
10. An obstruction has been encountered in either direction of travel. Open and close torque switches shall be adjustable by means of individually calibrated dials (marked open and close).
11. Electrical Controls Enclosures (Switch Compartment): Terminal strips, space heater, limit and torque switches, as well as optional electrical accessories, shall be prewired and supplied in a modular form (modular control package-MCP), housed in a single switch compartment meeting NEMA 4 weatherproof construction. Enclosures shall be flange to flange with 0-ring seal and hinged. Cover bolting shall be stainless steel and captive.
12. Stem Coupling: For applications which require coupling to a shaft and key, a steel drive bushing properly bored and keyed shall be supplied. Stem coupling for threaded stem applications shall be accomplished by means of a high tensile, bronze alloy stem nut. The nut shall of the top entry 2-piece design, permitting installation and removal without disassembly of the actuator or disconnecting the electrical wiring conduit.
13. Position Indication: Position indication shall be accomplished by means of an indicator dial in full step at all times with valve travel, whether in power or manual operation. The indicator dial shall be graduated in 25 percent increments as a minimum; closed, quarter open, half open, three-quarter open, and open.
14. Stem Protectors: Stem protectors for rising threaded stem applications shall be supplied by the gate manufacturer or contractor in suitable length and diameter to allow for full extension of the stem. Stem covers shall couple to the top of the actuator by means of a national pipe thread NPT and shall be capped to prevent the entrance of foreign matter and precipitation.
15. Electrical Controls: Electrical controls, shall be pre-mounted and wired as part of the Modular Control Package (MCP), and shall include but not be limited to reversing contactor, control power transformer, open-stop-close push buttons, and position indication light(s) (for open-close and throttling service), control power transformer, open-stop-close push buttons, indicating light(s), feedback potentiometer, and local-off-remote selector switch:
    a. Reversing Contactor: Control voltage shall be 120 volts, single phase, 60 Hz. Seal-in latching contacts shall be supplied for use in the push button circuits. When specified, additional auxiliary contacts (1 N.O. and 1 N.C.) shall be supplied. Starter shall be both electrically and mechanically interlocked.
    b. Control Power Transformer. Transformer shall be designed to transform 230 or 460 volts, three phase, 60Hz power to 120 volts, single phase. The transformer shall be complete with a grounded and fused secondary.
    c. Push Buttons: Each actuator shall be supplied complete with open-stop-close push buttons. Push buttons shall be furnished integral. As a minimum , the remote enclosure shall meet NEMA 4 weatherproof construction. When specified, the remote enclosures shall be available to meet submersible or NEMA 7 explosion-proof requirements.
    d. Indication Light(s): Each actuator shall be furnished complete with open-close light indication for valve position. Lenses shall be red for open and

green for close. Both lamps shall be lit during intermediate travel. Light(s) shall be mounted integral or in the separate remote push button enclosure when specified.

e. Reversing Contactor: Seal-in latching contacts shall not be supplied for the selector switch remote position.

f. Feedback Potentiometer: Feedback potentiometer shall be specifically selected for compatibility with the position comparator circuit supplied. The potentiometer shall be mechanically connected to the valve stem and in step at all times whether the unit is being operated electrically or by handwheel.

g. Selector Switch: A local-off-remote selector switch ftmction shall be supplied to isolate the incoming process signal control ftmction from the manual push button controls. The selector switch shall be padlockable in all three positions.

h. Position Comparator Circuit: The position comparator circuit shall be of solid state printed circuit board design and shall include (but not limited to) a zero, span and deadband adjustment. LED lamps shall be furnished for indication of control status. Positioning of the valve should be accomplished by comparing the input from the feedback potentiometer with an incoming process control signal. Process control signal shall be 4-20 MA or as specified by the purchaser.

i. All integral electrical components shall be shop-wired to a terminal strip(s) to facilitate a minimum of field wiring at the time of installation.

j. Position Transmitter: A position potentiometer (independent of feedback potentiometer in the case of modulating service) shall be supplied when continuous valve position signal is required. It shall be mechanically connected to the valve stem and in step at all times whether the unit is being electrically or handwheel operated.

2.10 ANCHOR BOLTS

A. Anchor bolts shall be provided by the gate manufacturer for mounting the gates and appurtenances.
   1. Quantity and location shall be determined by the gate manufacturer.
   2. If epoxy type anchor bolts are provided, the gate manufacturer shall provide the studs and nuts.
   3. Anchor bolts shall have a minimum diameter of 1/2-inch.

B. Anchor bolt installation shall be coordinated and supervised by Prime Contractor and checked for proper installation per manufacturer's recommendations.

2.11 GATE SCHEDULES

A. See Drawings for Gate Schedules.

PART 3 EXECUTION

3.1 INSTALLATION

A. Installation of the sluice gates and appurtenances shall be done in a workmanlike manner. It shall be the responsibility of the Contractor to handle, store and install the equipment specified in this Section in strict accordance with the manufacturer's recommendations.

B. The Contractor shall review the installation drawings and installation instruction prior to installing the gates.

C. The sluice gate assemblies shall be installed in a true vertical plane, square and plumb.

D. The Contractor shall fill the void in between the gate frame and the wall with non-shrink grout as shown on the installation drawing and in accordance with the manufacturer's recommendations.

E. The Contractor shall add a mastic gasket between the gate frame and wall thimble (when applicable) in accordance with the manufacturer's recommendations.

3.2 FIELD TESTING

A. After installation, all gates shall be field tested in the presence of the Engineer and Owner to ensure that all items of equipment are in full compliance with this Section. Each gate shall be operated through at least two complete open/close/open cycles to confirm that they operate without binding, scraping, or distorting. The effort to open and close manual operators shall be measured, and shall not exceed the maximum operating effort specified above. Electric motor actuators shall function smoothly and without interruption. Each gate shall be water tested by the Contractor, at the discretion of the Engineer and Owner, to confirm that leakage does not exceed the specified allowable leakage. This service shall take place after all mechanical equipment associated with the control system is installed and mechanically operable.

3.3 SITE VISIT, TRAINING, AND O&M MANUALS

A. Manufacturer's qualified representative shall make visits to the site at designed periods of time to ascertain the correct installation of the gates.

B. After equipment is fully operational, and before Owner will assume responsibility for the operation of the gate, the gate manufacturer's representative shall instruct the Owner's operating personnel in the care, maintenance and proper operation of the gate at no additional cost to the Owner.

C. Six sets of O & M Manuals shall be provided.

END OF SECTION

SECTION 40_05_61

KNIFE GATE VALVES

PART 1 GENERAL

1.1 SUMMARY

A. This specification covers the work necessary to furnish and install the various knife gate valves as specified herein and as shown on the plans

B. To obtain standardization of performance, operation, spare parts, maintenance, and Manufacturer's service, it is the intent of these specifications that all valves of like type and be furnished by a single Manufacturer, DeZurik Series "L" Knife Gates, or equal.

C. All listed iron and steel products used in this project must be produced in the United States. The term "iron and steel products" means the following products made primarily of iron or steel: lined or unlined pipes and fittings, manhole covers and other municipal castings, hydrants, tanks, flanges, pipe clamps and restraints, valves, structural steel, reinforced precast concrete, and construction materials. The deminimis and minor components waiver apply to this contract for minor components.

1.2 RELATED SECTIONS

A. Section 01_00_01 Basic Requirements

B. Section 01_33_01 General Submittal Requirements

C. The Contract Documents are a complete unit and complementary to each other. The individual Specification sections and other Contract Documents do not contain all cross references to "related work" or "related sections." It is the Contractor's responsibility to review the complete Contract Documents in order to properly scope, schedule and coordinate the work of any/all subcontractors, suppliers, and others on this project. Anything called out in one location of the Contract Documents is binding as if it were called out in all sections of the Contract Documents.

1.3 SUBMITTALS

A. Submittals for products and miscellaneous items in this specification section shall be submitted in accordance with Section 01_33_01 General Submittal Requirements and related submittal sections and provisions of the Contract Documents.

1.4 DELIVERY, STORAGE & HANDLING

A. Individual equipment components shall be crated in structurally adequate packing containers to prevent damage during shipping, facilitate ease of handling and to provide suitable protection from weather for extended storage at the jobsite prior to installation. Packing containers shall be permanently labeled with appropriate equipment identification, shipping address and return address. Packing list shall be provided with equipment at time of delivery.

B. Contractor shall utilize equipment and tools of adequate size suitable for unloading, transporting, storing and supporting the equipment during installation. Caution shall be employed to prevent equipment damage resulting from abrupt contact with other materials or equipment.

C. Any pumps, cables, or electrical equipment shall be kept thoroughly dry at all times, shall be stored indoors, and protected from freezing conditions. Equipment shall not be stored directly on the ground. Equipment storage shall be protected and maintained in accordance with the manufacturer's recommendations. Equipment is in storage when:
1. It has been delivered to the jobsite and is awaiting installation.
2. It has been installed, but operation is delayed pending completion of the project.
3. There has been long period between operation cycles (30 days or more).

D. Improper storage could result in product failure or restoration not covered by warranty. Contractor shall be solely responsible for any damage to equipment during storage as described above. If Contractor fails to store as required by manufacturer and supplier, and the warranty is voided due to such failure, equipment is automatically rejected by Owner/Engineer. Payment made to the Contractor under Stored Materials will be deducted from next monthly payment to the Contractor. New equipment shall be ordered and paid for by the Contractor for the project and at no cost to the Owner.

1.5 QUALITY ASSURANCE

A. The valves furnished under this contract shall be as manufactured by DeZurik or equal.

B. Manufacturers regularly engaged in the manufacture of the type of equipment specified and can demonstrate equipment of their manufacture in actual service for a period of not less than 15 years will be considered as acceptable Manufacturer if able to comply with the specifications.

C. The valve Manufacturer shall submit to the Contractor certified copies of factory test results for each system valve size. Test results shall be submitted prior to shipment upon Engineer's request and shall show compliance with specified performance requirements.

PART 2 PRODUCTS

2.1 MATERIALS

A. Valves shall be of the bonnetless knife gate type with wafer face-to-face flanged connections. Raised face flange shall be drilled to ANSI 125/150 pound standard. C.W.P. valve rating shall be 150 psi in sizes 2"-24" and 125 psi in sizes 30" and 36".

B. Valves shall be resilient seated.

C. Valve bodies shall be furnished with all wetted parts of Type 316 stainless steel. Valve body style shall be wafer, and end style code ANSI.

D. Valve packing shall be multiple layers of square, braided flax.

E. All sides of the gate shall be finish ground.

F. The stem shall be Type 316 stainless steel.

G. The valve superstructure shall be fabricated carbon steel.

H. The yoke sleeve shall be bronze. The valve body shall incorporate guides (on sizes 6" and larger) and jams to assist the seating. Valves shall have a raised face seat with a relieved area around the seat to prevent jamming.

I. Resilient seated valves shall have a seat ring with a molded resilient insert to the body and gate sides for installations where drip-tight shutoff is required. Resilient seat material shall be RS66.

J. Valves 14" and larger shall be equipped with bevel gear actuators.

PART 3 EXECUTION

3.1 INSTALLATION

A. The Contractor shall assume full responsibility for coordination of the entire project, including verification that all structures, piping, coating systems and equipment components are compatible. The Contractor shall initially operate each equipment system, and shall make all necessary adjustments so that each system is placed in proper operating condition.

B. Equipment and materials utilized for this project must be approved by the Engineer prior to installation. Approval for installation or incorporation in this project will be made only after submittal of Manufacturer's shop and installation drawings, test result certificates or other data as required and specified herein.

C. Installation of equipment shall be in full conformance with the Manufacturer's shop drawings and requirements as approved by the Engineer. Wherever a conflict arises between Manufacturer's instruction and the contract documents, the Contractor shall follow the Engineer's decision at no additional cost to the Owner.

3.2 WORKMANSHIP

A. The Contractor shall install equipment and materials in a workmanlike manner utilizing craftsmen skilled in the particular trade. The finished installation shall portrait a neat and plumb appearance.

B. Before installation, carefully clean valves of all foreign material, adjust stuffing boxes, and inspect valves in the OPEN and CLOSED positions. Install valves in accordance with the applicable portions of the Specifications. Unless otherwise indicated, install valves with the shaft vertical. Valves provided with chainwheel manual operators are to be installed with the shaft vertical, and the manual operator located below the piping. This should provide the operator with a clear view of the visual position indicator. Mount horizontal valves in such a manner that adequate clearance is provided for operation. Installation practices shall conform to Manufacturer's recommendations.

C. Prior to installing valves, the mating flange faces shall be thoroughly cleaned. After cleaning, insert the flange seals and valves and tighten the flange bolting progressively and in a uniform manner. Flanges should be pulled down tight against the valve I flange seals evenly. If flanges leak under pressure, loosen the bolting, reseat or replace the flange seals, re-tighten the bolting, and retest the connection. Flanged joints must be watertight at test pressures before acceptance.

3.3 MANUFACTURER'S SERVICES

A. Provide the services of a Representative of the Manufacturer of the valves to assist in adjusting and testing the equipment, to supervise initial operation, and to assist in making final adjustments and the tests specified, or which may be necessary to assure the Engineer the equipment is in satisfactory operating condition, and shall be done at no additional cost to the Owner.

END OF SECTION

SECTION 40_05_62.64

BUTTERFLY & PLUG VALVES

PART 1 GENERAL

1.1 SUMMARY

A. This specification covers the work necessary to furnish and install butterfly and eccentric plug valves as specified herein and as shown on the plans.

B. All listed iron and steel products used in this project must be produced in the United States. The term "iron and steel products" means the following products made primarily of iron or steel: lined or unlined pipes and fittings, manhole covers and other municipal castings, hydrants, tanks, flanges, pipe clamps and restraints, valves, structural steel, reinforced precast concrete, and construction materials. The deminimis and minor components waiver apply to this contract for minor components.

1.2 RELATED SECTIONS

A. Section 01_00_01 Basic Requirements

B. Section 01_33_01 General Submittal Requirements

C. The Contract Documents are a complete unit and complementary to each other. The individual Specification sections and other Contract Documents do not contain all cross references to "related work" or "related sections." It is the Contractor's responsibility to review the complete Contract Documents in order to properly scope, schedule and coordinate the work of any/all subcontractors, suppliers, and others on this project. Anything called out in one location of the Contract Documents is binding as if it were called out in all sections of the Contract Documents.

1.3 SUBMITTALS

A. Submittals for products and miscellaneous items in this specification section shall be submitted in accordance with Section 01_33_01 General Submittal Requirements and related submittal sections and provisions of the Contract Documents.

1.4 DELIVERY, STORAGE & HANDLING

A. Individual equipment components shall be crated in structurally adequate packing containers to prevent damage during shipping, facilitate ease of handling and to provide suitable protection from weather for extended at the jobsite prior to installation. Packing containers shall be permanently labeled with appropriate equipment identification, shipping address and return address. Packing list shall be provided with equipment at time of delivery.

B. Electrical equipment shall be kept thoroughly dry at all times and stored indoors. Equipment storage shall be protected and maintained in accordance with the Manufacturer's recommendations. Equipment shall not be stored directly on the ground.

C. Contractor shall utilize equipment and tools of adequate size suitable for unloading, transporting, storing and supporting the equipment during installation. Caution shall be employed to prevent equipment damage resulting from abrupt contact with other materials or equipment.

1.5 QUALITY ASSURANCE

A. The valves furnished under this contract shall be as manufactured by DeZurik or approved equal.

B. Manufacturers regularly engaged in the manufacture of the type of equipment specified and can demonstrate equipment of their manufacture in actual service for a period of not less than 15 years will be considered as acceptable Manufacturer if able to comply with the specifications.

C. The valve manufacturer shall submit to the Contractor certified copies of factory test results for each system valve size. Test results shall be submitted prior to shipment and shall show compliance with specified performance requirements.

D. Unless otherwise specified, exterior and interior metallic surfaces of each valve shall be shop painted per the latest revision of industry standard AWWA C504.

PART 2 PRODUCTS

2.1 MATERIALS – BUTTERFLY VALVES

A. Body – Cast iron

B. Packing: Acrylonitrile-Butadiene or PTFE

C. Seat: Acrylonitrile-Butadiene or Ethylene Propylene Diene Monomer (EPDM)

D. Disc: Cast Iron with 316 Stainless Steel edge

E. Bearings: Non-metallic, self-lubricating

F. Shaft: 304 Stainless Steel

2.2 COMPONENTS – BUTTERFLY VALVES

A. Valves shall be flanged style or mechanical joint with manual or electric operators. Valves installed in overhead piping shall utilize chain-wheel manual operators and be provided with a sufficient amount of chain to reach within four (4) feet of the floor. Valves shall have materials of construction as outlined above.

B. The disc shall be securely attached to the shaft with a 304 Stainless Steel torque screw or tangential pin locked in place with a set screw.

C. Shaft seals shall be self-compensating V-type packing with a minimum of four (4) sealing rings. One-piece molded shaft seals and O-ring shaft seals are not acceptable.

D. The valve seat shall be of Acrylonitrile-Butadiene for water service and EPDM for high-temperature air service. Seat shall be molded in and vulcanized to the valve body. The seat shall contain an integral shaft seal protecting the valve bearings and packing from any pipe line debris. Seats vulcanized to cartridge inserts or seats on the valve disc edge are not acceptable.

2.3 MANUAL OPERATORS

A. Manual operators shall be of a traveling nut style designed and tested per the requirements of AWWA C504. Housings shall be cast iron and shall be available in both weatherproof and buried constructions. All units shall have adjustable OPEN and CLOSED position stops. Manual operator input device (hand-wheel, chain-wheel, 2" AWWA square nut) shall be provided as noted on the plans or as dictated by industry standard practices.

2.4 COMPONENTS – PLUG VALVES

A. The plug valve shall be furnished with end connections as shown on the plans. Flanged ends shall be faced and drilled to the ANSI 125/150 lb. standard. Mechanical joint ends shall be to the AWWA standard C111-64.

B. Valve bodies shall be of ASTM A126 Class B cast iron in compliance with AWWA C504, Section 2.2. Bodies in 4" and larger plug valves shall be furnished with a raised welded-in overlay, cylindrical shaped seat of not less than 90% pure nickel in accordance with AWWA C507, Section 7.2. Seat area shall be raised, with raised surface completely covered with weld to insure that the plug face contacts only nickel. Valves utilizing resilient seat attached to the body shall be not acceptable. As per AWWA C504-80, Section 3.5.2 and AWWA C507-73, Section 7.2, sprayed or plated seats are not acceptable nor shall screwed-in seats be acceptable.

C. The plugs shall be of ASTM A126 Class B cast iron in compliance with AWWA C504, Section 2.2. The plug shall be of one piece construction and shall be capable of withstanding the full pressure rating of the valve without the use of additional structural reinforcing ribs that extend beyond the profile of the plug itself. Plugs with cast inlays shall not be acceptable.

D. Upper and lower journal bearings shall be sleeve type metal bearings conforming to AWWA C504-80, Section 316 and AWWA C507-73, Section 8. Journal bearing shall be of sundered, oil impregnated and permanently lubricated Type 316 ASTM A743 Grade CF-8M or AISI Type 317L stainless steel in ½" -36" plug valve sizes. In plug valves larger than 36", the upper and lower plug journals shall be fitted with ASTM A240 Type 316 stainless steel sleeves with bearings of ASTM B30, Alloy C95400 aluminum bronze. Thrust bearing shall be of Teflon. Non-metallic journal bearings shall not be acceptable.

E. Plug valve shaft seals shall be of the multiple V-ring type and shall be externally adjustable, re-packable without removing the bonnet or actuator from the valve, and re-packable under pressure. Shaft seals shall be Buna-V. Shaft seals shall conform with AWWA C504-80, Section 3.7 and AWWA C507-73, Section 10.2. Valves utilizing O-ring seals or non-adjustable packing shall not be acceptable. All exposed nuts, bolts, springs, washers, etc., shall be stainless steel for buried or submerged valves and zinc plated for all others.

F. Valve pressure ratings shall be 175 psi for ½" through 12" and 150 psi for 14" through 72".

G. Manual valves shall have lever or worm gear actuators with hand-wheels, chain-wheels, tee wrenches, extension stems, floor-stands, etc., as shown on the plans or as called for in the valve schedule. Worm gear actuators shall be furnished for all valves 4" or larger where the maximum reverse shutoff pressure is greater than 25 psi as indicated on the plans or in a valve schedule. Worm gear actuators shall be sized for pressure as indicated on the plans. All gearing shall be enclosed in a semi-steel housing and be suitable for running in a lubricant with seals provided on all shafts to prevent entry of dirt and water into the actuator. The actuator shaft and the quadrant shall be supported on permanently lubricated bronze bearings. Actuators shall clearly indicate valve position and an adjustable stop shall be provided to set closing torque. This adjustable stop shall be the only adjustment necessary to set the clearance between the valve plug and the seat while the valve is in line and under pressure. Hand-wheel and chain-wheel sizes for worm gear actuators shall be no smaller than 6" in diameter and no larger than twice the diameter of the actuator's gear sector. All exposed nuts, bolts, and washers shall be zinc plated.

H. Valves and gear actuators for buried or submerged service shall have seals on all shafts and gaskets on the valve and actuator covers to prevent the entry of water. Actuator mounting brackets for buried or submerged service shall be totally enclosed and shall have gasket seals. All exposed nuts, bolts, springs, and washers shall be stainless steel. Furnish adjustable valve boxes, and extension stems to within 12 inches of ground surface.

PART 3 EXECUTION

3.1 INSTALLATION

A. The Contractor shall assume full responsibility for coordination of the entire project, including verification that all structures, piping, coating systems and equipment components are compatible. The Contractor shall initially operate each equipment system, and shall make all necessary adjustments so that each system is placed in proper operating condition.

B. Equipment and materials utilized for this project must be approved by the Engineer prior to installation. Approval for installation or incorporation in this project will be made only after submittal of Manufacturer's shop and installation drawings, test result certificates or other data as required and specified herein.

C. Installation of equipment shall be in full conformance with the Manufacturer's shop drawings and requirements as approved by the Engineer. Wherever a conflict arises between Manufacturer's instruction and the contract documents, the Contractor shall follow the Engineer's decision at no additional cost to the Owner.

3.2 WORKMANSHIP

A. The Contractor shall install equipment and materials in a workmanlike manner utilizing craftsmen skilled in the particular trade. The finished installation shall portrait a neat and plumb appearance.

B. Before installation, carefully clean valves of all foreign material, adjust stuffing boxes, and inspect valves in the OPEN and CLOSED positions. Install valves in accordance with the applicable portions of the Specifications. Unless otherwise indicated, install valves with the

shaft vertical. Valves provided with chain-wheel manual operators are to be installed with the shaft vertical, and the manual operator located below the piping. This should provide the operator with a clear view of the visual position indicator. Mount horizontal valves in such a manner that adequate clearance is provided for operation. Installation practices shall conform to Manufacturer's recommendations.

C. Prior to installing valves, the mating flange faces shall be thoroughly cleaned. After cleaning, insert the flange seals and valves and tighten the flange bolting progressively and in a uniform manner. Flanges should be pulled down tight against the valve / flange seals evenly. If flanges leak under pressure, loosen the bolting, reseat or replace the flange seals, re-tighten the bolting, and retest the connection. Flanged joints must be watertight at test pressures before acceptance.

3.3 MANUFACTURER'S SERVICES

A. Provide the services of a Representative of the Manufacturer of the valves to assist in adjusting and testing the equipment, to supervise initial operation, and to assist in making final adjustments and the tests specified, or which may be necessary to assure the Engineer the equipment is in satisfactory operating condition.

END OF SECTION

THIS PAGE INTENTIONALLY LEFT BLANK FOR DOUBLE SIDED PRINTING

SECTION 40_05_65.23

SWING CHECK VALVES

PART 1 GENERAL

1.1 SUMMARY

A. This specification section covers the work necessary to furnish all labor, materials equipment and incidentals required to provide valves complete and operational with all appurtenances as specified herein and/or as shown on the plans. The equipment to be provided shall include, but not be limited to the following items: swing check valves with lever & weight/spring or air-cushion cylinders.

B. A single coordinating supplier will be responsible for furnishing the valves. The coordinating supplier shall be a manufacturer or supplier who is regularly engaged in the business. The coordinating supplier will prepare data required for complete description. The manufacturer will verify each valve is compatible with other components and all pipe materials and sizes are appropriate and all devices necessary for a proper functioning system have been provided. System supplier will furnish all equipment as a complete, integrated package, with a single responsibility for proper function.

C. The single supplier shall provide spare parts, maintenance and manufacturer's service a specified herein.

D. All listed iron and steel products used in this project must be produced in the United States. The term "iron and steel products" means the following products made primarily of iron or steel: lined or unlined pipes and fittings, manhole covers and other municipal castings, hydrants, tanks, flanges, pipe clamps and restraints, valves, structural steel, reinforced precast concrete, and construction materials. The deminimis and minor components waiver apply to this contract for minor components.

1.2 RELATED SECTIONS

A. Section 01_00_01 Basic Requirements

B. Section 01_33_01 General Submittal Requirements

C. The Contract Documents are a complete unit and complementary to each other. The individual Specification sections and other Contract Documents do not contain all cross references to "related work" or "related sections." It is the Contractor's responsibility to review the complete Contract Documents in order to properly scope, schedule and coordinate the work of any/all subcontractors, suppliers, and others on this project. Anything called out in one location of the Contract Documents is binding as if it were called out in all sections of the Contract Documents.

1.3 SUBMITTALS

A. Submittals for products and miscellaneous items in this specification section shall be submitted in accordance with Section 01_33_01 General Submittal Requirements and related submittal sections and provisions of the Contract Documents.

1.4 DELIVERY, STORAGE AND HANDLING

A. Individual components shall be crated in structurally adequate packing containers to prevent damage during shipping, facilitate ease of handling and to provide suitable protection from weather for extended storage at the jobsite prior to installation. Packing containers shall be permanently labeled with appropriate equipment identification, shipping address and return address. Packing list shall be provided with equipment at time of delivery.

B. Electrical equipment and equipment to be installed inside shall be kept thoroughly dry at all times and shall be stored indoors and protected from freezing conditions. Equipment storage shall be protected and maintained in accordance with the manufacturer's recommendations. Equipment shall not be stored directly on the ground.

C. Contractor shall utilize equipment and tools of adequate size suitable for unloading, transportation, storing and supporting the equipment during installation. Caution shall be employed to prevent equipment damage resulting from abrupt contact with other materials or equipment.

1.5 QUALITY ASSURANCE

A. The valves shall comply with applicable provisions and recommendations for recognized standards, except as otherwise shown or specified.

B. Valves shall be Series 250 swing check with ANSI 125/150# class flanges, as manufactured by DeZURIK.

C. All valves shall be hydrostatically tested and seat tested to demonstrate zero leakage. When requested, the Manufacturer shall provide test certification and required documentation. The valve coating system shall be NSF61 approved.

1.6 REFERENCES

A. The Contractor and/or Manufacturer shall follow the standards listed below, except as otherwise specified herein. The latest revision or edition in effect at the time of bid opening shall be utilized.
   1. ASTM A126 Standard Specification for Gray Iron Castings for Valves, Flanges,
   2. and Pipe Fittings
   3. ASTM A536 Standard Specification for Ductile Iron Castings
   4. ASTM A276 Standard Specifications for Stainless Steel Bars
   5. ASTM A582 T303 Standard Specification for Free-Machining Stainless Steel Bars
   6. AWWA 508 Swing-Check Valves for Waterworks Service, 2- through 24-inch NPS

PART 2 PRODUCTS

2.1 COMPONENTS

A. Swing check valves shall be constructed of heavy duty ductile iron body with a stainless steel body seat ring and single continuous stainless steel shaft for attachment of outside weight and lever or a totally enclosed air cushion cylinder.

B. The valve shall prevent the return of water or sewage back through the valve on pump shut off or power failure and be tight seating. The seat ring must be renewable and securely held in place by stainless steel screws.

C. If utilized, the cushion cylinder assembly shall be externally attached to the side of the valve body. The cylinder piston rod is connected to the external lever arm in a manner to lift the piston upwards when flow starts, and downwards when the flow stops to compress the entrapped air in the cylinder for cushion closing. The cushion cylinder shall be fitted with an adjustable control valve to increase or decrease air compression in the cylinder.

D. The valve disc shall be ductile iron suspended from a stainless steel shaft which shall pass through a stuffing box and be connected to the cushion cylinder on the outside of the valve.

E. The valve shall be guaranteed for a period of one year against failure to operate due to faulty workmanship or defective material, and shall meet or exceed AWWA C-508.

F. Valves materials of construction:

Body:	Ductile iron ASTM A536 GR.65-45-12
Cover:	Ductile iron ASTM A536 GR.65-45-12
Pivot Shaft:	Stainless steel T303
Disc Arm:	Ductile iron ASTM A536 GR.65-45-12
Disc:	Ductile iron ASTM A536 GR.65-45-12
Disc Seat:	Buna-N
Pivot Shaft Bushing:	Stainless steel T304
Body Seat Ring:	Stainless steel T304
Air Cylinder:	Aluminum alloy
Disc Nut:	Stainless steel T304
Counter Weight Arm:	Ductile iron ASTM A536 GR.65-45-12
Counter Weight:	Ductile iron ASTM A536 GR.65-45-12

PART 3 EXECUTION

3.1 GENERAL

A. The General Contractor shall assume full responsibility for coordination of the entire project, including verification all structures, piping, coating systems and equipment components are compatible. The General Contractor shall initially operate each equipment system, and shall make all necessary adjustments so that each system is placed in proper operating condition.

B. Equipment and materials utilized for this project must be approved by the Engineer prior to installation. Approval for installation or incorporation in this project will be made only after submittal or manufacturer's shop and installation drawings, test results or other data as specified herein.

C. Installation of equipment shall be in full conformance with the manufacturer's shop drawings and requirements as approved by the Engineer. Wherever a conflict arises between manufacturer's instructions and the contract documents, the contractor shall follow the Engineer's decision at no additional cost to the Owner.

3.2 WORKMANSHIP

A. Handle carefully and protect the equipment and appurtenances to avoid damage.

B. The equipment shall be safely installed in accordance with the manufacturer's instructions. All plumbing and electrical shall be in accordance with state and federal codes to ensure proper operation.

C. Any evidence of improper installation shall be corrected by the Contractor. Care during storage, installation and start-up shall be in strict accordance with manufacturer's recommendations.

3.3 MANUFACTURER'S SERVICES

A. The Contractor shall require the manufacturer to furnish the services of a qualified field Engineer to perform the following functions in the designed periods of time. These services are to be performed at the jobsite.
   1. Check-out of installation, start-up of equipment and initial operator instruction. This service shall take place after all mechanical equipment associated with the chemical storage and feed system is installed and mechanically operable. After equipment is fully operational, and before Owner will assume responsibility for the operation of the equipment, the equipment manufacturer's operation specialists shall instruct the Owner's operating personnel in the care, maintenance and proper operation of the equipment.

B. Instructions for installation of the equipment system and related appurtenances shall be written and furnished by the manufacturer.

C. Operation and Maintenance
   1. The manufacturer shall be responsible for supplying written instruction, which shall be sufficiently comprehensive to enable the operator to operate and maintain all valves supplied by the manufacturer. Instructions shall assume the operator is familiar with furnished equipment, but he/she has not previously operated and/or maintained the exact equipment supplied.
   2. The instruction shall be prepared as a manual applicable solely to the equipment supplied by the manufacturer, and shall include those devices and equipment supplied by him.
   3. Operation and maintenance instruction shall be specific to the equipment supplied in accordance with these Specifications.

D. Manufacturer's Cost

1. All costs for the above manufacturer's functions including travel, lodging, meals and incidentals shall be considered to have been included in the contract bid price.

3.4 INSTALLATION

A. Install per valve manufacture’s recommendations.

B. Carefully handle and lower the valves into position so to prevent damage to any part of the valves.

3.5 ADJUST

A. Adjust weight position and air cushion operation in accordance with manufacturer recommendations.

END OF SECTION

THIS PAGE INTENTIONALLY LEFT BLANK FOR DOUBLE SIDED PRINTING

SECTION 40_05_66.23

SURGE RELIEF ANGLE VALVES

PART 1 GENERAL

1.1 SUMMARY

A. This specification covers the work necessary to furnish and install surge relief angle valves as specified herein and as shown on the plans.

B. All valves shall be APCO model SRA-3000A Surge Relief Angle Valves as manufactured by DeZurik.

C. A single coordinating supplier will be responsible for furnishing the valves. The coordinating supplier shall be a manufacturer or supplier who is regularly engaged in the business. The coordinating supplier will prepare data required for complete description. The manufacturer will verify each valve is compatible with other components and all pipe materials and sizes are appropriate and all devices necessary for a proper functioning system have been provided. System supplier will furnish all equipment as a complete, integrated package, with a single responsibility for proper function.

D. The single supplier shall provide spare parts, maintenance and manufacturer's service a specified herein.

E. All listed iron and steel products used in this project must be produced in the United States. The term "iron and steel products" means the following products made primarily of iron or steel: lined or unlined pipes and fittings, manhole covers and other municipal castings, hydrants, tanks, flanges, pipe clamps and restraints, valves, structural steel, reinforced precast concrete, and construction materials. The deminimis and minor components waiver apply to this contract for minor components.

1.2 RELATED SECTIONS

A. Section 01_00_01 Basic Requirements

B. Section 01_33_01 General Submittal Requirements

C. The Contract Documents are a complete unit and complementary to each other. The individual Specification sections and other Contract Documents do not contain all cross references to "related work" or "related sections." It is the Contractor's responsibility to review the complete Contract Documents in order to properly scope, schedule and coordinate the work of any/all subcontractors, suppliers, and others on this project. Anything called out in one location of the Contract Documents is binding as if it were called out in all sections of the Contract Documents.

1.3 SUBMITTALS

A. Submittals for products and miscellaneous items in this specification section shall be submitted in accordance with Section 01_33_01 General Submittal Requirements and related submittal sections and provisions of the Contract Documents.

1.4 DELIVERY, STORAGE & HANDLING

A. Individual components shall be crated in structurally adequate packing containers to prevent damage during shipping, facilitate ease of handling and to provide suitable protection from weather for extended storage at the jobsite prior to installation. Packing containers shall be permanently labeled with appropriate equipment identification, shipping address and return address. Packing list shall be provided with equipment at time of delivery.

B. Contractor shall utilize equipment and tools of adequate size suitable for unloading, transportation, storing and supporting the equipment during installation. Caution shall be employed to prevent equipment damage resulting from abrupt contact with other materials or equipment.

1.5 QUALITY ASSURANCE

PART 2 PRODUCTS

A. Surge Relief Angle Valves shall be normally closed against the system pressure by external spring(s) in compression and shall open quickly to relieve pressure when the system pressure exceeds the pressure relief setting. The pressure relief setting shall be factory set and field adjustable by adjusting the spring compression. The valve will begin to close when the system pressure subsides below the pressure relief setting.

B. The closing speed shall be adjustable to suit the application by means of infinitely adjustable, lockable flow control valve.

C. Body shall be a 90 degree elbow design conforming to the center-to-face dimension for long-radius elbows per ASME 816.1 and ASME 816.42. Valve shall be a compact design to fit in tight installation spaces.

D. Body and cover shall be constructed of ASTM A536 Grade 65-45-12 ductile iron. Body Seat shall be 316 stainless steel. Flanges shall be flat faced and conform to ASME 816.42 Class 150. Valve shall be proof-of-design tested to 5,000 cycles.

E. A self-contained, sealed hydraulic system shall provide closing speed control. The valve cover shall provide an air gap between the line fluid and the hydraulic oil that will indicate seal wear and prevent contamination of line fluid or hydraulic oil. The valve shall be capable of being mounted in any position without modification or customization of the hydraulic system components. A mechanical stroke counter with manual reset shall provide local indication of total valve cycles.

F. External sprinq(s) located on the valve cover in a protective steel enclosure shall provide closing force. Springs shall be sized to optimally match customer-specified relief pressure

setting to minimize pressure rise above the set-point in order to fully open valve. A single adjustment screw shall be provided for field adjustment of relief pressure setting.

G. Valve Disc shall have a replaceable seat ring of Acrylonitrile-Butadiene (NBR); Terpolymer of Ethylene, Propylene and A Diene (EPDM) or Fluoro Rubber (FKM) for tight shutoff.

PART 3 EXECUTION

3.1 GENERAL

A. The General Contractor shall assume full responsibility for coordination of the entire project, including verification all structures, piping, coating systems and equipment components are compatible. The General Contractor shall initially operate each equipment system, and shall make all necessary adjustments so that each system is placed in proper operating condition.

B. Equipment and materials utilized for this project must be approved by the Engineer prior to installation. Approval for installation or incorporation in this project will be made only after submittal or manufacturer's shop and installation drawings, test results or other data as specified herein.

C. Installation of equipment shall be in full conformance with the manufacturer's shop drawings and requirements as approved by the Engineer. Wherever a conflict arises between manufacturer's instructions and the contract documents, the contractor shall follow the Engineer's decision at no additional cost to the Owner.

3.2 INSTALLATION

A. The Contractor shall assume full responsibility for coordination of the entire project, including verification that all structures, piping, coating systems and equipment components are compatible. The Contractor shall initially operate each equipment system, and shall make all necessary adjustments so that each system is placed in proper operating condition.

B. Equipment and materials utilized for this project must be approved by the Engineer prior to installation. Approval for installation or incorporation in this project will be made only after submittal of Manufacturer's shop and installation drawings, test result certificates or other data as required and specified herein.

C. Installation of equipment shall be in full conformance with the Manufacturer's shop drawings and requirements as approved by the Engineer. Wherever a conflict arises between Manufacturer's instruction and the contract documents, the Contractor shall follow the Engineer's decision at no additional cost to the Owner.

3.3 WORKMANSHIP

A. Handle carefully and protect the equipment and appurtenances to avoid damage.

B. The equipment shall be safely installed in accordance with the manufacturer's instructions. All plumbing and electrical shall be in accordance with state and federal codes to ensure proper operation.

C. Any evidence of improper installation shall be corrected by the Contractor. Care during storage, installation and start-up shall be in strict accordance with manufacturer's recommendations.

D. The Contractor shall install equipment and materials in a workmanlike manner utilizing craftsmen skilled in the particular trade. The finished installation shall portrait a neat and plumb appearance.

E. Before installation, carefully clean valves of all foreign material, adjust stuffing boxes, and inspect valves in the OPEN and CLOSED positions. Install valves in accordance with the applicable portions of the Specifications. Unless otherwise indicated, install valves with the shaft vertical. Valves provided with chain-wheel manual operators are to be installed with the shaft vertical, and the manual operator located below the piping. This should provide the operator with a clear view of the visual position indicator. Mount horizontal valves in such a manner that adequate clearance is provided for operation. Installation practices shall conform to Manufacturer's recommendations.

F. Prior to installing valves, the mating flange faces shall be thoroughly cleaned. After cleaning, insert the flange seals and valves and tighten the flange bolting progressively and in a uniform manner. Flanges should be pulled down tight against the valve / flange seals evenly. If flanges leak under pressure, loosen the bolting, reseat or replace the flange seals, re-tighten the bolting, and retest the connection. Flanged joints must be watertight at test pressures before acceptance.

3.4 MANUFACTURER'S SERVICES

A. The Contractor shall require the manufacturer to furnish the services of a qualified field Engineer to perform the following functions in the designed periods of time. These services are to be performed at the jobsite.
   1. Check-out of installation, start-up of equipment and initial operator instruction. This service shall take place after all mechanical equipment associated with the chemical storage and feed system is installed and mechanically operable. After equipment is fully operational, and before Owner will assume responsibility for the operation of the equipment, the equipment manufacturer's operation specialists shall instruct the Owner's operating personnel in the care, maintenance and proper operation of the equipment.

B. Instructions for installation of the equipment system and related appurtenances shall be written and furnished by the manufacturer.

C. Operation and Maintenance
   1. The manufacturer shall be responsible for supplying written instruction, which shall be sufficiently comprehensive to enable the operator to operate and maintain all valves supplied by the manufacturer. Instructions shall assume the operator is familiar with furnished equipment, but he/she has not previously operated and/or maintained the exact equipment supplied.

2. The instruction shall be prepared as a manual applicable solely to the equipment supplied by the manufacturer, and shall include those devices and equipment supplied by him.
3. Operation and maintenance instruction shall be specific to the equipment supplied in accordance with these Specifications.

D. Manufacturer's Services
1. Provide the services of a Representative of the Manufacturer of the valves to assist in adjusting and testing the equipment, to supervise initial operation, and to assist in making final adjustments and the tests specified, or which may be necessary to assure the Engineer the equipment is in satisfactory operating condition.
2. All costs for the above manufacturer's functions including travel, lodging, meals and incidentals shall be considered to have been included in the contract bid price.

END OF SECTION

THIS PAGE INTENTIONALLY LEFT BLANK FOR DOUBLE SIDED PRINTING

SECTION 40_05_67

GATE VALVES

PART 1 GENERAL

1.1 SUMMARY

A. This specification covers the work necessary to furnish and install gate valves and appurtenances at locations shown on the plans or directed by the Engineer

B. All listed iron and steel products used in this project must be produced in the United States. The term "iron and steel products" means the following products made primarily of iron or steel: lined or unlined pipes and fittings, manhole covers and other municipal castings, hydrants, tanks, flanges, pipe clamps and restraints, valves, structural steel, reinforced precast concrete, and construction materials. The deminimis and minor components waiver apply to this contract for minor components.

1.2 RELATED SECTIONS

A. Section 01_00_01 Basic Requirements

B. Section 01_33_01 General Submittal Requirements

C. The Contract Documents are a complete unit and complementary to each other. The individual Specification sections and other Contract Documents do not contain all cross references to "related work" or "related sections." It is the Contractor's responsibility to review the complete Contract Documents in order to properly scope, schedule and coordinate the work of any/all subcontractors, suppliers, and others on this project. Anything called out in one location of the Contract Documents is binding as if it were called out in all sections of the Contract Documents.

1.3 SUBMITTALS

A. Submittals for products and miscellaneous items in this specification section shall be submitted in accordance with Section 01_33_01 General Submittal Requirements and related submittal sections and provisions of the Contract Documents.

1.4 DELIVERY, STORAGE & HANDLING

A. Individual equipment components shall be crated in structurally adequate packing containers to prevent damage during shipping, facilitate ease of handling and to provide suitable protection from weather for extended storage at the jobsite prior to installation. Packing containers shall be permanently labeled with appropriate equipment identification, shipping address and return address. Packing list shaJl be provided with equipment at time of delivery.

B. Contractor shall utilize equipment and tools of adequate size suitable for unloading, transporting , storing and supporting the equipment during installation. Caution shall be

employed to prevent equipment damage resulting from abrupt contact with other materials or equipment.

C. Any pumps, cables, or electrical equipment shall be kept thoroughly dry at all times, shall be stored indoors, and protected from freezing conditions. Equipment shaJl not be stored directly on the ground. Equipment storage shaJl be protected and maintained in accordance with the manufacturer's recommendations. Equipment is in storage when:
1. It has been delivered to the jobsite and is awaiting installation.
2. It has been installed, but operation is delayed pending completion of the project.
3. There has been long period between operation cycles (30 days or more).

D. Improper storage could result in product failure or restoration not covered by warranty. Contractor shall be solely responsible for any damage to equipment during storage as described above in Paragraph 1.02, C. a. b. & c. If Contractor fails to store as required by manufacturer and supplier, and the warranty is voided due to such failure, equipment is automatically rejected by Owner/Engineer. Payment made to the Contractor under Stored Materials will be deducted from next monthly payment to the Contractor. New equipment shall be ordered and paid for by the Contractor for the project and at no cost to the Owner.

PART 2 PRODUCTS

2.1 GENERALS

A. Valves and appurtenances shall be manufactured by Muel1er, American Flow Control, Clow, DeZurik, or approved equal.

B. Valves for vault or building service shall be complete with all necessary operating handwheels, chain wheels, extension stems, floor stands, worm and gear operators, operating nuts, chains, and wrenches which are required for proper completion of the valve installation.

C. Valves for buried service shall be complete with gravel or concrete support pad, and two-piece valve box set in a 16- inch x 16-inch x 6-inch thick concrete pad. Concrete shall be 4000 psi at 28 days.

D. Vault or Building Service: The valve shall be iron body, bronze mounted with flanged ends, double-disc gate, rising bronze stem and confonning to AWWA C500. Design working pressure shall be 200 psi. The valve shall open counterclockwise and be operated by handwheel, unless otherwise noted.

E. Buried Service: The valve shall be iron body, non-rising stem, double-disc gate, o-ring sealed stuffing box, with mechanical joint ends. The valve shall open counterclockwise and have a 2-inch square operating nut.

F. I-Handle Operating Wrenches: Operating wrenches shall be 4-feet total length

G. Valve Boxes: The box shall be of sufficient length to reach from the pipe to at least one-inch above the final ground surface elevation. The box shall be two-piece sliding type, cast iron, with 5-inch shaft. Extension pieces, ifrequired, shall be the manufacturer's standard

type. The word WATER or "W" or SEWER or "S" shall be cast into the top of the lid, as appropriate for the service. Units shall be Mueller, Clow, or approved equal.

H. Valve Operators
1. All valve operators shall open by turning counterclockwise.
2. Valve operators shall be self-locking type to prevent creeping.

I. Extension Stems for Valve Operators (Buried Service): Where the depth of the valve is such that its centerline is more than 4 feet below grade, operating extension stems shall be provided to bring the operating nut to a point 6- inches below the surface of the ground and/or box cover. Extension stems shall be constructed of steel and shall be complete with 2-inch square operating nut.

J. Extension Bonnets for Valve Operators: Bonnet and stem shall be constructed of steel and given manufacturer's standard paint system. Bonnets shall be as supplied by Pratt, Allis Chalmers, or approved equal.

K. Valve Support Pad: All buried valves shall be supported by a concrete or gravel pad. The pad shall be at least 6- inches thick measured from the bottom of the valve. The horizontal dimensions of the pad shall be 6-inches greater than the largest centerline. Concrete shall be at least 4000 psi at 28 days. Gravel shall be clean, durable, and well- graded from 1/4-inch to one-inch.

PART 3 EXECUTION

3.1 COORDINATION

A. General Contractor shall provide skilled supervision and coordination between all personnel (sub-contractors and employees) to make sure that installed equipment is easy to operate and maintain.

B. Contractor is responsible for coordination between trades.

C. The Contractor shall assume full responsibility for coordination of the entire pro ject, including verification that all structures, piping, coating systems and equipment components are compatible. The Contractor shall initially operate each equipment system, and shall make all necessary adjustments so that each system is placed in proper operating condition.

D. Electrical connections, power supply, conduit runs, and anchor bolt installation shall be coordinated and supervised by Prime Contractor and checked for proper installation per manufacturer's recommendations.

3.2 BURIED VALVES

A. Install valves in the line at locations indicated on the plans, unless otherwise directed, and set plumb on concrete or gravel pad. All foreign matter shall be removed from the valve interior prior to installation.

3.3 VALVES IN VAULTS

A. Install in the lines as indicated on the drawings, unless otherwise directed. The valve shall be oriented to provide easy access. All foreign matter shall be removed from the interior prior to installation.

3.4 PRESSURE TEST

A. Gate valve test shall be a part of the test on the companion water line(s).

3.5 DISINFECTION

A. Gate valve disinfection shall be with the part of the disinfection of the companion water line(s).

END OF SECTION

SECTION 40_05_71.23

MUD VALVES

PART 1 GENERAL

1.1 SUMMARY

A. This specification covers the work necessary to furnish and install mud valves as specified herein and as shown on the plans.

B. To obtain standardization of performance, operation, spare parts, maintenance, and Manufacturer's service, it is the intent of these specifications that all valves of like type be furnished by a single Manufacturer.

C. All listed iron and steel products used in this project must be produced in the United States. The term "iron and steel products" means the following products made primarily of iron or steel: lined or unlined pipes and fittings, manhole covers and other municipal castings, hydrants, tanks, flanges, pipe clamps and restraints, valves, structural steel, reinforced precast concrete, and construction materials. The deminimis and minor components waiver apply to this contract for minor components.

1.2 RELATED SECTIONS

A. Section 01_00_01 Basic Requirements

B. Section 01_33_01 General Submittal Requirements

C. The Contract Documents are a complete unit and complementary to each other. The individual Specification sections and other Contract Documents do not contain all cross references to "related work" or "related sections." It is the Contractor's responsibility to review the complete Contract Documents in order to properly scope, schedule and coordinate the work of any/all subcontractors, suppliers, and others on this project. Anything called out in one location of the Contract Documents is binding as if it were called out in all sections of the Contract Documents.

1.3 SUBMITTALS

A. Submittals for products and miscellaneous items in this specification section shall be submitted in accordance with Section 01_33_01 General Submittal Requirements and related submittal sections and provisions of the Contract Documents.

1.4 REFERENCES

A. The Contractor and/or Manufacturer shall follow the standards listed below, except as otherwise specified herein. The latest revision or edition in effect at the time of bid opening shall be utilized.

1.5 DELIVERY, STORAGE & HANDLING

A. Individual equipment components shall be crated in structurally adequate packing containers to prevent damage during shipping, facilitate ease of handling and to provide suitable protection from weather for extended storage at the jobsite prior to installation. Packing containers shall be permanently labeled with appropriate equipment identification, shipping address and return address. Packing list shall be provided with equipment at time of delivery.

B. Contractor shall utilize equipment and tools of adequate size suitable for unloading, transporting, storing and supporting the equipment during installation. Caution shall be employed to prevent equipment damage resulting from abrupt contact with other materials or equipment.

1.6 QUALITY ASSURANCE

A. The valves furnished under this contract shall be as manufactured by Trumbull, or approved equal.

B. Manufacturers regularly engaged in the manufacture of the type of equipment specified and can demonstrate equipment of their manufacture in actual service for a period of not less than 15 years will be considered as acceptable Manufacturer if able to comply with the specifications.

PART 2 PRODUCTS

2.1 GENERAL

A. Mud valves shall be stainless steel with resilient seats as described herein. Valves shall be the non-rising stem type and be a heavy duty design.

B. The body flange, yoke, guides and gate shall be cast of type 316 stainless steel. After machining, all castings shall be passivated in accordance with ASTM A-380. Valves including components welded from stainless steel are not acceptable. The resilient seat shall be of SBR rubber and mechanically retained. Fasteners shall be stainless steel.

C. The valve stem shall be one piece with an integral thrust collar and be cast or machined from type 316 stainless steel. The valve stem shall have the minimum diameters as shown below:

Valve Size	Minimum Stem Diameter
4″	1-3/16″
6″	1-3/16″
8″	1-7/16″
10″	1-7/16″
12″	1-7/16″
16″	1-1/2″

D. The valve shall be capable of withstanding a minimum input torque of 490 foot pounds, without damage to the valve. The valve shall not leak more than one quart per hour, when the valve is closed to a stem torque of 35 foot pounds. The manufacturer shall support leakage and torque testing with a report from an independent test laboratory.

E. The stem shall be coupled to the extension stem with a stainless steel machined coupling or a cast stainless 2" square operating nut and retained with a 1/4" stainless steel spring pin. No welded components of stainless are permitted for this connection or to the valve stem. Stems shall be retained with stainless fasteners assembled through holes drilled in the valve guide and yoke and retained with stainless hex nuts. Valve designs which retain the valve stem by threading stainless screws into tapped holes are not acceptable.

F. The stem shall have a permanently bonded coating to prevent galling with other stainless components. The coating shall be safe for potable water use and capable of enduring a minimum of 15,000 open-close cycles without galling or excessive wear. The manufacturer shall support cycle testing with a report from an independent test laboratory.

G. The base flange shall be drilled per ANSI 125# standard and have a minimum thickness of ¾". The base flange shall be machined to provide a smooth seating surface.

H. The extension stem shall be type 316 stainless steel of schedule 40 pipe or solid round bar. The top nut and bottom couplings of the extension stem shall be either cast or machined from type 316 stainless steel, but not include any welded components.

I. The position of the mud valves, from fully open to fully closed shall be visible by means of a cast stainless steel indicating-type floor stand. Where a floor is not directly over the valve and extension stem, the floors tands shall be supported by a cast stainless wall bracket mounted to the side wall. Wall brackets shall contain a plate designed to support the floor stand. The pedestal shall be cast of type 316 stainless steel and have a vertical indicating slot. A bronze indicator travels on a threaded stem to indicate the position of the valve. The floor stand shall be operated by a 12" diameter hand wheel of type 316 stainless. The word "OPEN" shall be cast in the pedestal at the top of the indicating slot. A "CLOSED" tag will be field mounted to the pedestal, to indicate the closed position of the valve. Floor stands fabricated by welding flanges to pipe shall not be accepted. The coupling used to connect the floor stand stem to the extension stem shall be stainless steel, type 316.

J. Stem Guides shall be constructed of cast stainless steel, type 316. Stem guides fabricated by welding stainless steel shall not be permitted. Stem guides shall include a bronze bushing with an inside diameter 1/16" larger than the outside diameter of the extension stem and shall be retained with two stainless steel screws.

K. The stem guide shall be of the adjustable design for plumb alignment. The adjusting bolt and washer shall be type 316 stainless. Stem guides shall be spaced so that the unsupported length between extension stems shall not exceed 7 feet. Mud valves shall be operated with extension stems, stem guides and either position indicators or indicating floor stands, as shown on the valve schedule or drawings. Mud valves shall be manufactured by Trumbull Industries, Youngstown, Ohio or Engineer approved equal.

PART 3 EXECUTION

3.1 INSTALLATION

A. The Contractor shall assume full responsibility for coordination of the entire project, including verification that all structures, piping, coating systems and equipment components are compatible. The Contractor shall initially operate each equipment system, and shall make all necessary adjustments so that each system is placed in proper operating condition.

B. Equipment and materials utilized for this project must be approved by the Engineer prior to installation. Approval for installation or incorporation in this project will be made only after submittal of Manufacturer's shop and installation drawings, test result certificates or other data as required and specified herein.

C. Installation of equipment shall be in full conformance with the Manufacturer's shop drawings and requirements as approved by the Engineer. Wherever a conflict arises between Manufacturer's instruction and the contract documents, the Contractor shall follow the Engineer's decision at no additional cost to the Owner.

3.2 WORKMANSHIP

A. The Contractor shall install equipment and materials in a workmanlike manner utilizing craftsmen skilled in the particular trade. The finished installation shall portrait a neat and plumb appearance.

B. Before installation, carefully clean valves of all foreign material, adjust stuffing boxes, and inspect valves in the OPEN and CLOSED positions. Install valves in accordance with the applicable portions of the Specifications. Unless otherwise indicated, install valves with the shaft vertical. This should provide the operator with a clear view of the visual position indicator. Installation practices shall conform to Manufacturer's recommendations.

3.3 MANUFACTURER'S SERVICES

A. Provide the services of a Representative of the Manufacturer of the valves to assist in adjusting and testing the equipment, to supervise initial operation, and to assist in making final adjustments and the tests specified, or which may be necessary to assure the Engineer the equipment is in satisfactory operating condition. Installation shall be inspected and certified by the manufacturer that the valve has been installed in accordance with manufacturer's instructions.

END OF SECTION

SECTION 40_41_13.01

INSULATION & HEAT TRACING

PART 1 GENERAL

1.1 SUMMARY

A. Furnishing and installing insulation and heat tape on piping and equipment as required by this section of the Contract Documents, unless otherwise indicated specifically on individual plans and appropriate sections of Contract Documents.

B. **ALL** equipment and **ALL** piping less than 12" exposed to non-heated indoor spaces and located outside shall be provided with heat trace and insulation to prevent freezing

C. Any Drawing or Specification that conflicts with this Specification section shall be brought to the attention of the Engineer prior to bid. When no clarification is provided the Contractor is to assume that the more restrictive & expensive product/system/item applies and shall be included in the Contractor's bid.

1.2 RELATED SECTIONS

A. Section 01_00_01 Basic Requirements

B. Section 01_33_01 General Submittal Requirements

C. The Contract Documents are a complete unit and complementary to each other. The individual Specification sections and other Contract Documents do not contain all cross references to "related work" or "related sections." It is the Contractor's responsibility to review the complete Contract Documents in order to properly scope, schedule and coordinate the work of any/all subcontractors, suppliers, and others on this project. Anything called out in one location of the Contract Documents is binding as if it were called out in all sections of the Contract Documents.

1.3 SUBMITTALS

A. Submittals for products and miscellaneous items in this specification section shall be submitted in accordance with Section 01_33_01 General Submittal Requirements and related submittal sections if included.

1.4 REFERENCES

A. The Contractor and/or Manufacturer shall follow the standards listed below, except as otherwise specified herein. The latest revision or edition in effect at the time of bid opening shall be utilized.

B. American National Standards Institute (ANSI)

C. Institute of Electrical and Electronics Engineers (IEEE)

D. American Society for Testing and Materials (ASTM)
   1. ASTM B193 - Standard Test Method for Resistivity of Electrical Conductor Materials.
   2. ASTM D2633 - Standard Test Methods for Thermoplastic Insulations and Jackets for Wire and Cable.
   3. ASTM C547 - Standard Specification for Mineral Fiber Pipe Insulation
   4. ASTM C553 Standard Specification for Mineral Fiber Blanket Thermal Insulation for Commercial and Industrial Applications.
   5. ASTM C578 - Standard Specification for Rigid, Cellular Polystyrene Thermal Insulation.
   6. ASTM C585 - Standard Practice for Inner and Outer Diameters of Thermal Insulation for Nominal Sizes of Pipe and Tubing.

E. National Fire Protection Association (NFPA)

F. National Electric Code (NEC)

G. Factory Mutual (FM)

H. FM Approval Guide

I. Underwriters Laboratories (UL)

J. National Electrical Manufacturers Association (NEMA)

K. NEMA 250 - Enclosures for Electrical Equipment (1000 Volts Maximum)

L. Occupational Safety and Health Administration (OSHA)

1.5 QUALITY ASSURANCE

A. Manufacturer's Qualifications
   1. The electrical heat trace system manufacturer shall be required to demonstrate a minimum of 5 years' experience in the design and manufacture of industrial electrical heat trace systems similar to those described in this Section and/or shown on the drawings.

B. Acceptable Manufacturers (or approved equivalent):
   1. Heat Tracing
      a. Raychem (Chemelex)
      b. Nelson Electronic
      c. Chromalox
      d. Thermon Manufacturing Company.
   2. Insulation
      a. Armstrong Co.
      b. CertainTeed
      c. Owens-Corning Fiberglass
      d. Pittsburg Plate Glass Co.
      e. Pittsburg – Corning

C. The insulation specified herein shall be furnished and installed by qualified insulation personnel whose principal business is the application and installation of thermal materials

on piping systems. All material shall be manufactured by one of the listed approved Manufacturer's instructions, except where these instructions conflict with the Contract Documents hereinafter stated, in which case the Contract Documents shall govern.

1.6 DESCRIPTION/DESIGN REQUIREMENTS

A. Provide a heat tracing system capable of maintaining the specified temperature during the extremes of ambient temperature.

B. Design Parameters
1. Voltage Available..... 277 Volts 1 Phase
2. Explosion Classification ..... Class I, Div.
3. Wind Velocity..... 160 mph
4. Low Ambient Temperature..... -20°F
5. Maintain Temperature ..... 65F degrees
6. Piping and equipment less than 12" exposed to non-heated indoor spaces and located outside shall be provided with heat trace and insulation to prevent freezing

1.7 WARRANTY

A. All electrical heat trace cables shall be warranted against manufacturing defects for a period of 5 years from energizing. Cables failing due to manufacturer defect prior to the expiration of the warranty shall be replaced by contractor at no additional cost to the owner.

PART 2 PRODUCTS

2.1 MATERIALS

A. General
1. Engage the services of qualified insulation personnel to furnish and install all the insulation required for the piping specified hereinafter. Heat tracing shall be of constant wattage.
2. All surfaces to be insulated shall be clean and dry before applying the insulation. All sections of molded pipe covering shall be firmly butted together. Where coverings are used, they shall lap the adjoining section of insulation by at least 3 inches. Where insulation terminates, it shall be neatly beveled and finished. No insulation shall be applied until the pipe has been pressure tested and found tight. Piping flexible connections, flanges and unions shall not be covered. All materials used shall be fire retardant or nonflammable.
3. Where vapor barriers are required, the vapor barrier shall be on the outside. Extreme care shall be taken that the vapor barrier is unbroken. Joints, etc., shall all be sealed. Where insulation with a vapor barrier terminates, it shall be sealed off with the vapor barrier being continuous to the surface being insulated. Ends shall not be left raw.
4. Aluminum bands shall be applied on the piping insulation. The bands shall be applied three to a section of pipe insulation. Fittings, valves, etc., shall have bands on each side. Apply bands at each end of pipe support.
5. Where supports are on the outside of the insulation, use a section of Foam glass or rigid cork insulation at support locations and provide No. 14 gage galvanized

steel sleeves, 12 inches long on pipe sizes up to 12 inches and 18 inches long on larger pipe sizes to protect the insulation. The sleeves shall be half cylinders with the edges hemmed to prevent cutting the insulation.

6. All materials used shall have a flame spread rating of not more than 25 without evidence of continued progressive combustion, and with a smoke developed rating not higher than 50. Shop drawing submittals shall show this information.
7. Weather exposed insulation shall be protected jacket (see below)

B. Jacket
   1. Material: Aluminum, Alloy 5005; 0.016-inch (26 gauge) minimum thickness.
   2. Overlap: Overlap circumferential joints 4 inches minimum; overlap longitudinal joints 1-inch minimum; longitudinal joints oriented to minimize water entry.
   3. Bands: 0.5 inch wide, 0.0508 inch (16 gauge) thick aluminum, same alloy as jacket or 0.0179 inch thick Type 304 stainless steel; install on 18 inch centers,uniformly spaced and at all fitting joints.
   4. Joint seal: Apply waterproof adhesive at joints and overlaps.
   5. Fittings: Custom fit of same materials.
   6. Manufacturers: One of the following or equal:
      a. Childers Products.
      b. Premetco International.

C. Freeze Protection
   1. Insulation
      a. Unless otherwise indicated in the specific requirements and/or on the plans, all piping, fittings, valves and related items smaller than 12 inches exposed to non-heated indoor spaces and located outside in yard in an unheated space subject to freezing shall be heat trace and insulated.
      b. Buried yard piping need not be insulated.
      c. Piping capable of draining automatically need not be insulated.
      d. All insulation of pipes shall run to a point 12 inches below ground surface.
   2. Heat Tracing: Electric heat tapes shall be provided inside the insulation for freeze protection on all piping receiving insulation subject to freezing. The rate and quantity of insulation shall be specified hereinafter.
   3. Schedule: Unless otherwise specified or shown elsewhere in the contract documents, the following schedule of insulation and heat tape application shall be used:

Insulation Schedule for Piping Subject to Freezing.

Nominal Pipe Size (in)**	Insulation Thickness (in)	Insulation "K"*	Heat Tape Application Rate (Minimum) Watts/Linear Feet
½	2	0.3	1.0
3/4	2	0.3	1.2
1	2	0.3	1.2
1-1/2	2	0.3	1.5
2	2	0.3	1.8
2-1/2	2	0.3	1.9
3	2	0.3	1.9
4	2	0.3	2.7
6	2	0.3	2.7
8	2	0.3	2.7
10	2	0.3	2.7
12	2	0.3	2.7

* "K" - Thermal conductivity of insulation in BTUH per square foot per degree Fahrenheit, per inch.

** Insulation and heat tape required for a pipe size not shown on the schedule shall be the same as the next larger pipe size shown on this schedule.

D. Insulation for Hot Piping

1. Insulation Material – Molded rigid fiberglass sectional pipe insulation rated to 500 degrees F. The insulation shall have a minimum density of 3.5 lbs/cu ft and a maximum thermal conductivity "K" factor of 0.29 BTU-in/(hr-sq.ft.-deg.F) at 200

degrees F mean temperature. Provide insulation with kraft paper bonded to aluminum foil reinforced with fiberglass yarn and self-sealing lap.

PART 3 EXECUTION

3.1 INSTALLATION

A. Heat Tracing

1. Pipelines or equipment subject to freezing shall be heat traced as indicated on "Insulation Schedule," paragraph 2.01 C. 3. Furnish and install on such pipeline or equipment an electric heat tracing system consisting of a flat, flexible, low heat-density electrical heating strip of self-limiting parallel-circuit construction consisting of an inner core of conductive material between two parallel copper bus strips with a polyolefin outer jacket. The strip shall be cut-to-length in field and installed on pipelines and equipment as required. The electrical insulation of the heater strip shall be rated at 185 F minimum temperature exposure and shall be suitable for 115, 208 volts as indicated on plans or as available. The heat tracing system shall be complete with all necessary power connections, end seals, adjustable thermostats and electric traced signed per Manufacturer's installation instructions.

B. Insulation

1. All work shall be performed in a neat workmanlike manner and all adhesives, bands and other fastening materials and devices shall be supplied as required to properly install the insulation materials being furnished.

END OF SECTION

SECTION 40_71_84

PARSHALL FLUMES

PART 1 GENERAL

1.1 SUMMARY

A. This specification covers the work necessary to furnish and install Parshall flumes as specified herein and as shown on the plans

1.2 RELATED SECTIONS

A. Section 01_00_01 Basic Requirements

B. Section 01_33_01 General Submittal Requirements

C. The Contract Documents are a complete unit and complementary to each other. The individual Specification sections and other Contract Documents do not contain all cross references to "related work" or "related sections." It is the Contractor's responsibility to review the complete Contract Documents in order to properly scope, schedule and coordinate the work of any/all subcontractors, suppliers, and others on this project. Anything called out in one location of the Contract Documents is binding as if it were called out in all sections of the Contract Documents.

1.3 SUBMITTALS

A. Submittals for products and miscellaneous items in this specification section shall be submitted in accordance with Section 01_33_01 General Submittal Requirements and related submittal sections and provisions of the Contract Documents.

1.4 REFERENCES

A. The Contractor and/or Manufacturer shall follow the standards listed below, except as otherwise specified herein. The latest revision or edition in effect at the time of bid opening shall be utilized.

1.5 DELIVERY, STORAGE & HANDLING

A. Equipment shall be delivered to the jobsite completely factory assembled. Individual equipment components shall be crated in adequate packing containers to prevent damage, facilitate ease of handling and to provide suitable protection from weather for extended storage at the jobsite prior to installation. Packing containers shall be permanently labeled with appropriate equipment identification, shipping address and return address. Packing list shall be provided with equipment at time of delivery.

B. Electrical equipment shall be kept thoroughly dry at all times and shall be stored indoors. Equipment shall be stored directly on the ground.

1.6 QUALITY ASSURANCE

A. The FRP flumes furnished under this contract shall be as manufactured by Engineered Fiberglass Composites or equal.

B. Only manufacturers regularly engaged in the manufacture of the type of equipment specified and that can demonstrate equipment of their manufacture in actual service for a period of not less than 5 years will be considered.

PART 2 PRODUCTS

2.1 GENERAL

A. The parshall flume shall be installed as shown on the plans in accordance with the manufacturer's recommendation. The FRP flumes shall be of single piece reinforced polyester construction with end flanges and reinforcing ribs providing secure and permanent anchorage. The flumes should be located in a straight reach of channel without bends or changes in alignment directly upstream and should have a well distributed velocity profile. A staff gauge with 1/4" minor divisions in inches shall be provided on each flume. Extreme care should be exercised by the installing Contractor to make sure that there is no distortion of the liner either in the sides or bottom during the "pouring" of concrete or grout when setting the flumes.

B. FRP flumes shall be of fiberglass reinforced polyester construction having smooth white isophthalic gelcoat finish on the interior surface. Flumes shall be molded one-piece units consisting of the converging, throat and diverging sections. Integral fiberglass anchor clips shall be provided to help secure unit in place during installation.

PART 3 EXECUTION

3.1 INSTALLATION

A. The Contractor shall assume full responsibility for coordination of the entire project, including verification that all electronic systems and equipment components are compatible.

B. Equipment and materials utilized for this project must be approved by the Engineer prior to installation. Approval for installation or incorporation in this project will be made only after submittal of manufacturer's shop and installation drawings, test results or other data as required and as specified herein.

C. Installation of equipment shall be in full conformance with the manufacturer shop drawings and requirements.

3.2 WARRANTY

A. The manufacturer and Contractor shall warrant the equipment to be of quality construction, free from defects in materials and workmanship. The warranty shall become effective upon final acceptance of the whole project by the Owner.

B. The equipment, apparatus, and parts furnished shall be warranted for a period of one (1) year form the date of final acceptance of the project by the Owner.

C. Components failing to perform as specified, or as represented by the manufacturer, or proven defective in service during the warranty period, shall be replaced, repaired, or satisfactorily modified by the manufacturer and Contractor without cost to the Owner.

3.3 FUNCTION OF THE MANUFACTURER

A. Provide the services of a representative of the flume/flowmeter manufacturer to assist in adjusting and testing the equipment, to supervise initial operation, and to assist in making final adjustments and the tests specified, or which may be necessary to assure the Engineer that the equipment is in satisfactory operating conditions.

B. Operation and Maintenance Materials
   1. The manufacturer shall be responsible for supplying written instruction, which shall be sufficiently comprehensive to enable the operator to service, program, and operate the meter and all equipment supplied by the manufacturer.
   2. Operation and maintenance instruction shall be specific to the equipment supplied in accordance with these specifications. Instruction manuals applicable to many different configurations and meters, and which require the operator to selectively read portions of the instructions shall not be acceptable.

END OF SECTION

THIS PAGE INTENTIONALLY LEFT BLANK FOR DOUBLE SIDED PRINTING

SECTION 40_75_43

DISSOLVED OXYGEN SENSORS

PART 1 GENERAL

1.1 SUMMARY

A. This specification covers the work necessary to furnish and install Luminescent Dissolved Oxygen Analyzer for monitoring dissolved oxygen in wastewater.
   1. Locations
      a. 1 for each SBR (3)
      b. 1 for each Digestor (2)

B. The method of measuring dissolved oxygen will be a probe using luminescent sensor technology.

C. Other methods of dissolved oxygen measurement such as probes that use a selective membrane or those that use electrolytes are not acceptable.

1.2 RELATED SECTIONS

A. Section 01_00_01 Basic Requirements

B. Section 01_33_01 General Submittal Requirements

C. Section 01_33_02 Pre-bid Equipment Submittal Requirements

D. The Contract Documents are a complete unit and complementary to each other. The individual Specification sections and other Contract Documents do not contain all cross references to "related work" or "related sections." It is the Contractor's responsibility to review the complete Contract Documents in order to properly scope, schedule and coordinate the work of any/all subcontractors, suppliers, and others on this project. Anything called out in one location of the Contract Documents is binding as if it were called out in all sections of the Contract Documents.

1.3 SUBMITTALS

A. Submittals for products and miscellaneous items in this specification section shall be submitted in accordance with Section 01_33_01 General Submittal Requirements and related submittal sections and provisions of the Contract Documents.

1.4 REFERENCES

A. The Contractor and/or Manufacturer shall follow the standards listed below, except as otherwise specified herein. The latest revision or edition in effect at the time of bid opening shall be utilized.

1.5 DELIVERY, STORAGE & HANDLING

A. Individual equipment components shall be crated in structurally adequate packing containers to prevent damage during shipping, facilitate ease of handling and to provide suitable protection from weather for extended at the jobsite prior to installation. Packing containers shall be permanently labeled with appropriate equipment identification, shipping address and return address and weight. Packing list shall be provided with equipment at time of delivery.

B. Any electrical equipment shall be kept thoroughly dry at all times and stored indoors. Equipment storage shall be protected and maintained in accordance with the Manufacturer's recommendations. Equipment shall not be stored directly on the ground.

C. Contractor shall utilize equipment and tools of adequate size suitable for unloading, transporting, storing and supporting the equipment during installation. Caution shall be employed to prevent equipment damage resulting from abrupt contact with other materials or equipment.

1.6 QUALITY ASSURANCE

A. System Description
   1. Performance Requirements
      a. Measurement range: 0.01 to 20.00 mg/L
      b. Resolution: 0.01 mg/L
      c. Accuracy: ± 0.2 percent of span
      d. Repeatability: ± 0.5 percent of span
      e. Sensitivity: 0.05 percent of span
      f. Response Time: 90 percent in less than 30 seconds and 95 percent in less than 90 seconds at 20°C

B. Certifications
   1. General Purpose CSA/CSANRTL and FM (UL Pending) when used with an approved controller.
   2. Class 1, Div 2 Groups A thru D CSA/CSANTRL and FM (UL Pending) when used with an approved controller.

C. Environmental Requirements
   1. Operating temperature: 0 to 50 °C
      a. Probe 0 to 50° C
      b. Controller: 20 to 60 °C
   2. Relative humidity: 95%, non-condensing
   3. Immersion depth: 107 meters, maximum
   4. Immersion pressure: 1050 kPa, maximum
   5. Distance, analyzer to sensor: 300 meters, maximum

1.7 WARRANTY

A. The Manufacturer shall warrant the equipment to be of quality construction, free from defects in materials and workmanship. The probe body shall be warranted for a period of three years, the sensor cap is warranted for a period of one year. All warranties shall become effective upon final acceptance of the entire project by the Owner.

B. The manufacturer shall demonstrate proof of financial responsibility with respect to performance and delivery date. In addition, the manufacturer shall provide proof of evidence of facilities, equipment, and skills required to produce the equipment specified herein and provide technical service and replacement parts.

C. The Manufacturer and the Contractor shall be solely responsible for the warranty of the equipment and all non-consumable components. Components failing to perform as specified by the Engineer, or as represented by the Manufacturer, or proven to be defective in service during the warranty period, shall be replaced, repaired, or satisfactorily modified by the Manufacturer without any additional costs to the Owner.

1.8 MAINTENANCE SERVICE

A. Scheduled Maintenance
1. Sensor cleaning: 90 days or depending on conditions.
2. Sensor and sensor cap inspection: 90 days
3. Sensor cap replacement: annually
4. Calibration: per regulatory agency schedule

B. Unscheduled maintenance
1. Replace fuse
2. Clean instrument enclosure

PART 2 PRODUCTS

2.1 MANUFACTURER

A. Model HachLDOTM Probe, or preapproved equal - Hach Company, Loveland, CO

2.2 MANUFACTURED UNIT

A. The Probe consists of continuous-reading probe, replaceable sensor cap, and 10-meter integral cable.

B. The Probe shall connect to a dual port controller capable of accepting other parameter probes including TSS, pH, ORP, Nitrate, Ammonia, UVAS, Sludge Level, & Turbidity.

2.3 EQUIPMENT

A. The Sensor is made of polybutyl methacrolate.

B. The Probe is made of foamed Noryl® and 316 stainless steel.

C. The Probe is entirely corrosion-resistant and fully immersible.

D. The Probe does not require sample conditioning or electrolyte solutions.

E. The Probe interface to the controller is MODBUS®.

F. F. The operation of the Probe is not affected by H2S, pH, K+1, Na+1, Mg+2, Ca+2, NH4+1, Al+3, Pb+2, Cd+2, Zn+2, Cr (total), Fe+2, Fe+3, Mn+2, Cu+2, Mi+2, Co+2, CN-1, NO3-1, SO4-2, S-2, PO4+3, Cl-1, anion active tensides, crude oils, or Cl2-1.

G. G. Calibration methods:
1. Sample calibration: Sample is compared to a standard instrument or the Winkler Titration method.
2. Air calibration: One point, 100 percent water-saturated air.

2.4 COMPONENTS

A. Standard Equipment:
1. Probe with replaceable cap
2. Integral cable
3. Manual

B. Dimensions
1. Diameter: 60 mm (2.4 in.)
2. Length: 290mm (11.5in.)

C. Weight
1. Probe: 3 pounds, 2 ounces (1.4 kg)

D. Sensor cable: 30 foot, integral

2.5 ACCESSORIES

A. Hand Rail mount kit – one per probe – 1-1/2" PVC extensions purchased locally may be needed.

PART 3 EXECUTION

3.1 PREPARATION

A. Mounting
1. Probe: Pole (handrail mount)
2. Controller: Surface, pole or pipe

3.2 INSTALLATION

A. Coordinate installation with structure and confirm instrument location.

B. Contractor will install the instruments in strict accordance with the manufacturer's instructions and recommendation.

C. Coordinate with SCADA system, install complete cabling and confirm data signal communications.

D. Manufacturer's representative will include a day of start-up service by a factory-trained technician. Contractor will schedule a date and time for start-up.

E. Contractor will require the following people to be present during the start-up procedure.
   1. General contractor
   2. Electrical contractor
   3. Factory trained representative
   4. Owner's personnel
   5. Engineer's Representative

END OF SECTION

THIS PAGE INTENTIONALLY LEFT BLANK FOR DOUBLE SIDED PRINTING

SECTION 41_21_23.15

BELT CONVEYOR SYSTEM

PART 1 GENERAL

1.1 SUMMARY

A. This specification section covers the labor and materials necessary to furnish and install all equipment required to provide a complete and operable system as described herein.
   1. Northside WWTP – 1 unit
      a. Serpentix Converyor Corporation.
      b. 12 tons per hour maximum feed rate
   2. Spare Parts
      a. 5 belt pans w/hardware
      b. 10 guide blocks
      c. 5 chain attachments
      d. 2 rubber scraper blades.

B. Components shall be of the same manufacturer or supplier to obtain standardization of performance, operation, spare parts, maintenance and manufacturer's services.

C. The Contractor shall furnish and install all equipment required to provide a complete and operable system as described herein.

D. All listed iron and steel products used in this project must be produced in the United States. The term "iron and steel products" means the following products made primarily of iron or steel: lined or unlined pipes and fittings, manhole covers and other municipal castings, hydrants, tanks, flanges, pipe clamps and restraints, valves, structural steel, reinforced precast concrete, and construction materials. The deminimis and minor components waiver apply to this contract for minor components.

1.2 RELATED SECTIONS

A. Section 01_00_01 Basic Requirements

B. Section 01_33_01 General Submittal Requirements

C. Section 01_33_02 Pre-bid Equipment Submittal Requirements

D. The Contract Documents are a complete unit and complementary to each other. The individual Specification sections and other Contract Documents do not contain all cross references to "related work" or "related sections." It is the Contractor's responsibility to review the complete Contract Documents in order to properly scope, schedule and coordinate the work of any/all subcontractors, suppliers, and others on this project. Anything called out in one location of the Contract Documents is binding as if it were called out in all sections of the Contract Documents.

1.3 SUBMITTALS

A. Submittals for products and miscellaneous items in this specification section shall be submitted in accordance with Section 01_33_01 General Submittal Requirements and related submittal sections and provisions of the Contract Documents and include:
   1. Detailed specifications
   2. Equipment agreement
   3. Detailed electrical data (as applicable)
   4. Installation instructions
   5. Written warranty
   6. Equipment storage requirements
   7. Any other information relating to delivery, storage, installation, operations and maintenance of the equipment

1.4 DELIVERY, STORAGE & HANDLING

A. Equipment shall be delivered to the jobsite completely factory assembled in accordance with manufacturer's recommendations. Individual equipment components shall be crated in structurally adequate packing containers to prevent damage during shipping, facilitate ease of handling and to provide suitable protection from weather for extended storage at the jobsite prior to installation. Packing containers shall be permanently labeled with appropriate equipment identification, shipping address and return address and packing list shall be provided with equipment at time of delivery.

B. Equipment shall be kept thoroughly dry at all times and shall be stored indoors. Equipment storage shall be protected and maintained in accordance with the manufacturer's recommendations. Equipment shall not be stored directly on the ground.

C. Contractor shall utilize equipment and tools of adequate size suitable for unloading, transporting, storing and supporting the equipment during installation. Caution shall be employed to prevent equipment damage resulting from abrupt contact with other materials or equipment. The Contractor shall be responsible for equipment damaged during unloading transportation and storing at no additional cost to the Owner.

1.5 ACCEPTABLE MANUFACTURERS/SUPPLIERS

A. Manufacturers regularly engaged in the manufacture of the type of equipment specified and can demonstrate equipment of their manufacturer in actual service will be considered as an acceptable manufacturer. Manufacturers named in the specifications will not be required to presubmit detailed equipment information prior to the bid date per Section 01_33_02.

1.6 QUALITY ASSURANCE

A. Equipment furnished and installed under this section shall be fabricated, assembled, erected, and placed in proper operating condition in full conformity with drawings, specifications, Engineering data, instruction, and recommendations of the equipment manufacturer unless exceptions are noted by the Engineer. The equipment manufacturer must have at least five (5) of similar size installed and operating in the State of Oklahoma for a minimum of five (5) years. Equipment and associated appurtenances shall be provided by the same supplier.

1.7 WARRANTY

A. The manufacturer shall warrant the equipment to be of quality construction, free from defects in materials and workmanship. The warranty shall become effective upon acceptance of the project by the Owner or Owner's authorized agent.

B. The equipment, apparatus, and parts furnished shall be warranted from a period of one (1) year from the final acceptance date of the WWTP, excepting only those items that are normally consumed in service, such as oil, grease, gaskets, o-rings, etc. The manufacturer shall be solely responsible for the warranty of the equipment and all components.

C. Upon request from the Engineer and/or the Owner, the manufacturer shall demonstrate proof of financial responsibility with respect to performance and delivery date. In addition, the manufacturer shall provide proof of evidence of facilities, equipment, and skills required to produce the equipment specified herein and provide technical service and replacement parts.

D. Components failing to perform as specified by the Engineer, or as represented by the manufacturer, or proven defective in service during the warranty period, shall be replaced, repaired, or satisfactorily modified by the manufacturer without cost of kind to the Owner.

E. It is not intended the manufacturer assume liability for consequential damages or contingent liabilities arising out of failure of any product or parts thereof to operate properly, however caused by or resulting from or arising out of defects in design or manufacture, delays in delivery, replacement, or otherwise.

PART 2 PRODUCTS

2.1 CONVEYOR EQUIPMENT

A. The conveyor equipment consist of conveyor belt pans, tracks and supports, take up and drive stations. The centerline length of the conveyor(s) shall be approximately 51'-9", with 26 inch wide belt pans and shall travel at 30 FPM. Verify actual dimensions on Drawings. Loading onto the conveyor(s) shall be distributed evenly and shall not exceed a design capacity rated at 12 tons per hour maximum feed rate. The conveyor(s) shall have a watertight modular conveying surface with a 20 degree troughed cross section at the outside of the belt width. Each modular conveying section shall have a convolution that permits the assembled belt to make continuous vertical, horizontal and helical turns that will flatten out as it goes over the drive station, and allows for continuous belt cleaning with a pre-tensioned scraper bar. The modular belt pan section shall be reinforced with non-metallic stiffeners molded into each modular belt section to achieve troughing. The conveyor(s) will be designed in such a way that all moving parts of the system, except for the drive and tension station components, will pass a single designated point along the conveying path which may be used for maintenance and/or service of the conveyor.

2.2 CONVEYOR BELT AND CHAIN

A. The conveying surface will consist of individually replaceable modular belt pan sections molded of moldable plastic rubber (MPR). The belt pans shall be fastened every eight (8) inches and supported by a nylon attachment and two (2) durable enhanced, plastic guide

(and wear) blocks bolted to a case hardened alloy steel chain. The chain shall have a minimum breaking strength of 35,000 pounds. Each modular belt pan section will have a cleat like convolution at least 1 1/2 inches high, permanently molded into the rubber. The closed link alloy steel chain, with alternating horizontal and vertical links will allow for movement in two or more directions. The 4" pitch chain will be guided by the guide blocks bolted bilaterally to each vertical chain link. The belt pan attachments and guide blocks shall be shipped assembled on the chain. The chain and guide blocks will operate in a UHMWPE track consisting of a base, two sides and two top containment angles.

2.3 TRACKS AND SUPPORTS

A. The fabricated I beam shall be the structural frame of the conveyor system. The top and bottom flanges of the I beam will have the UHMWPE track, with bilaterally positioned angles to contain the guide blocks as they are pulled through the track system by the steel chain. The structural I beam will be fabricated from 1/8-inch thick, A36 structural steel. The containment angles will be UHMWPE. The guide blocks will stabilize the belt pan surface in the event of unbalanced material loading. Track sections of required length shall be factory fabricated and ready for job site assembly by splice bolting where indicated. The conveyor frame and the conveyor supports shall be structural steel conforming to ASTM A36. All shop welding shall conform to the latest standards of the American Welding Society.

B. Manufacturer to coordinate with structural drawings and metal building supplier for requirements of mounting discharge end of conveyor to the structural members. No support will be allowed to extend down to the floor of the loading area. If structural modifications are required they shall be the responsibility of the manufacturer and shall be submitted with structural calculations stamped by an Oklahoma Registered Structural Engineer (SE) at no additional cost.

2.4 DRIVE UNIT

A. The fully assembled drive station shall consist of a 3 horsepower, 230/460V, 3 Ph, 60 Hz, TEFC energy efficient motor, a durable corrosion resistant UHMW polyethylene sprocket, gear reducer, V belt, sheaves, and steel sprockets which in combination give the proper belt speed for the load indicated. A single chain drive between the reducer and the steel sprocket shaft is to be provided for further power and speed reduction. The belt drive sheaves shall be interchangeable in order to provide a different speed by means of other size sheaves. Directly coupled drive motor gear reducer combinations shall not be acceptable. A mechanical ratcheting clutch shall be incorporated into the drive design to prevent or mitigate damage to any of the drive components/drive structure. Any type of over-torque condition created by product overloading or jamming conditions will cause the ratcheting clutch to release, isolating the power from the electric motor to the gearbox and other power transmission components. The torque setting is adjustable and shall be properly set at the factory for each conveyor application.

2.5 CHAIN TENSIONING STATION

A. The fully assembled tension station shall consist of a durable corrosion resistant UHMW polyethylene chain sprocket, a constant pressure spring loaded chain tensioner adjustable by a single ratchet, and track all fabricated and assembled in a structural frame ready for installation.

2.6 FLEX-END DISCHARGE

A. Not used.

2.7 SKIRT BOARDS

A. Conveyor skirt boards shall be provided at each loading area per dimensions shown on the drawings. Skirts shall be 3/8" thick HDPE and shall be supported by brackets from the conveyor frame. Brackets shall be A-36 steel, hot dipped galvanized.

2.8 DRIP PANS

A. 16 gauge, galvanized steel sheet drip pans, with A36 steel support brackets, shall be provided below the conveyor and shall be sloped to drain as indicated on the drawings.

2.9 HARDWARE

A. All nuts, bolts and washers shall be type 316 stainless steel.

2.10 SAFETY STOP SWITCH

A. Flag arm safety pull cord switches on each side of the conveyor with orange protective coated cable running the entire length of the conveyor. Nema 7 (Explosion Proof), 20 amps, 125, 250 or 480 VAC, single pole, double throw circuit.

2.11 BELT SCRAPER

A. A pre-tensioned scraping mechanism, with a replaceable rubber blade and UHMWPE backing plate to continuously remove most material from the conveying surface shall be provided at the conveyor discharge.

2.12 FACTORY FINISH

A. Shall be hot dipped galvanized to ASTM 123/A 123M-02 specifications.

B. All OEM supplied equipment will be furnished with their factory-applied finish.

2.13 SPARE PARTS

A. One set of spare parts, consisting of 5 belt pans w/hardware, 10 guide blocks, 5 chain attachments, and 2 rubber scraper blades.

PART 3 EXECUTION

3.1 GENERAL

A. The General Contractor shall assume full responsibility for coordination of the entire project, including verification of all structures, piping, coating systems and equipment components are compatible. The general contractor shall initially operate each equipment

system, and shall make all necessary adjustments so that each system is placed in proper operating condition.

B. Equipment and materials utilized for this project must be approved by the Engineer prior to installation. Approval for installation or incorporation in this project will be made only after submittal or manufacturer's shop and installation drawings, test results or other data as specified herein. Installation of equipment shall be in full conformance with the manufacturer shop drawings and requirements as approved by the Engineer. Wherever a conflict arises between manufacturer's instructions and the contract documents, the contractor shall follow the Engineer's decision at no additional cost to the Owner.

C. Installation of equipment shall be in full conformance with the manufacturer's shop drawings and requirements.

3.2 WORKMANSHIP

A. Handle carefully and protect the equipment and appurtenances to avoid damage.

B. The equipment shall be safely secured to the wall and floor in accordance with the Engineer's design drawings. All plumbing and electrical shall be in accordance with state and federal codes. All piping and tubing shall be sealed for leaks.

C. Any evidence of improper installation shall be corrected by the Contractor. Care during storage, installation and startup shall be in strict accordance with manufacturer's recommendations.

3.3 MANUFACTURER'S SERVICES

A. The Contractor shall require the manufacturer to furnish the services of a qualified field Engineer to perform the following functions in the designed periods of time. These services are to be performed at the jobsite. A minimum of two (2) visits to the job site shall be required.
   1. Check-out of installation, start-up of equipment and initial operator instruction. This service shall take place after all mechanical equipment associated with the control system is installed and mechanically operable. One (1) 8-hour man day, minimum.
   2. After equipment is fully operational, and before Owner will assume responsibility for the operation of the equipment, the equipment manufacturer's operation specialists shall instruct the Owner's operating personnel in the care, maintenance and proper operation of the equipment.
   3. All costs for the above manufacturer functions including travel, lodging, meals, and incidentals shall be considered to have been included in the contractor's lump sum bid price.
   4. Prior to plant startup, all equipment described herein shall be inspected for proper alignment, quiet operation, proper connections, and satisfactory performance by means of a functional test.
   5. During plant start-up all equipment described herein shall be inspected for proper connections and satisfactory performance by means of a function test.
   6. The equipment system and associated accessories shall be field tested to verify adequate performance.

7. Units apparently failing to meet the Specifications must be corrected to provide proper service. Should the problem persist due to a flaw in material and/or in the design of the equipment, new equipment must be provided by the Contractor to meet the specifications.

B. Operation and Maintenance
   1. The equipment manufacturer shall be responsible for supplying written instruction, which shall be sufficiently comprehensive to enable the operator to operate and maintain and all equipment supplied by the manufacturer. Instructions shall assume that the operator is familiar with related equipment and controls, but that he has not previously operated and/or maintained the exact equipment supplied.
   2. The instruction shall be prepared as a system manual applicable solely to the equipment supplied by the manufacturer to these specifications, and shall include those devices and equipment supplied by him.
   3. Operation and maintenance instruction shall be specific to the equipment supplied in accordance with these specifications.

C. Manufacturer's Costs:
   1. All costs for the above manufacturer functions including travel, lodging, meals, and incidental shall be considered to have been included in the Contractor's lump sum bid price.

END OF SECTION

THIS PAGE INTENTIONALLY LEFT BLANK FOR DOUBLE SIDED PRINTING

SECTION 41_22_00

CRANES & HOISTS

PART 1 GENERAL

1.1 SUMMARY

A. Provide and install jib cranes, trolleys, and hoists per Drawings and Specifications with electrical connection and any/all other components necessary to provide a complete and working system. It is the intent that all Cranes and Hoists for complete project come from a single supplier.

B. Contractor shall first have pump & equipment submittals that are to be lifted approved to ascertain that the trolley and hoists supplied shall be adequate to lift specified items (clearances and weights.)

C. Electrical connections, power supply, conduit runs, and anchor bolt installation shall be coordinated and checked for proper installation per manufacturer's recommendations.

D. All components of cranes and hoists to be corrosion resistant by supplier or shall be field painted per Specifications.

E. All listed iron and steel products used in this project must be produced in the United States. The term "iron and steel products" means the following products made primarily of iron or steel: lined or unlined pipes and fittings, manhole covers and other municipal castings, hydrants, tanks, flanges, pipe clamps and restraints, valves, structural steel, reinforced precast concrete, and construction materials. The deminimis and minor components waiver apply to this contract for minor components.

1.2 RELATED SECTIONS

A. Section 01_00_01 Basic Requirements

B. Section 01_33_01 General Submittal Requirements

C. The Contract Documents are a complete unit and complementary to each other. The individual Specification sections and other Contract Documents do not contain all cross references to "related work" or "related sections." It is the Contractor's responsibility to review the complete Contract Documents in order to properly scope, schedule and coordinate the work of any/all subcontractors, suppliers, and others on this project. Anything called out in one location of the Contract Documents is binding as if it were called out in all sections of the Contract Documents.

1.3 SUBMITTALS

A. Submittals for products and miscellaneous items in this specification section shall be submitted in accordance with Section 01_33_01 General Submittal Requirements and related submittal sections and provisions of the Contract Documents.

B. Submittals shall include actual dimensions required for the correct operation of the complete Jib Cranes and Hoist systems for its intended purpose including, but not limited to raising the screens, lifting the pump out of the influent / effluent pump station / SBR basin, and lifting a dumpster from the headworks floor. It is the contractor's responsibility to verify in the field and check the Drawings to guarantee that the selected lifting and conveying units will perform its intended purpose.

C. Motorized Bridge Crane submittal to be stamped by an Oklahoma registered Structural Engineer (SE.)

D. Shop drawings and equipment data
   1. Manufacturer's catalog data for hoist.
   2. Dimensional drawings and details for complete system.
   3. Wiring schematics. - ship with hoists

E. Operations and Maintenance Manuals
   1. Equipment function, normal operating characteristics, and limiting conditions.
   2. Assembly, installation, alignment, and maintenance instructions.
   3. Lubrication and maintenance instructions.
   4. Guide to "troubleshooting".
   5. Parts list.
   6. Test results.

1.4 DELIVERY, STORAGE & HANDLING

A. Individual equipment components shall be crated in structurally adequate packing containers to prevent damage during shipping, facilitate ease of handling and to provide suitable protection from weather for extended storage at the jobsite prior to installation. Packing containers shall be permanently labeled with appropriate equipment identification, shipping address and return address. Packing list shall be provided with equipment at time of delivery.

B. Any pumps, cables, or electrical equipment shall be kept thoroughly dry at all times, shall be stored indoors, and protected from freezing conditions. Equipment shall not be stored directly on the ground. Equipment storage shall be protected and maintained in accordance with the manufacturer's recommendations. Equipment is in storage when:
   1. It has been delivered to the jobsite and is awaiting installation.
   2. It has been installed, but operation is delayed pending completion of the project.
   3. There has been long period between operation cycles (30 days or more).

C. Improper storage could result in product failure or restoration not covered by warranty. Contractor shall be solely responsible for any damage to equipment during storage as described above. If Contractor fails to store as required by manufacturer and supplier, and the warranty is voided due to such failure, equipment is automatically rejected by Owner/Engineer. Payment made to the Contractor under Stored Materials will be deducted from next monthly payment to the Contractor. New equipment shall be ordered and paid for by the Contractor for the project and at no cost to the Owner.

D. Contractor shall utilize equipment and tools of adequate size suitable for unloading, transporting, storing and supporting the equipment during installation. Caution shall be

employed to prevent equipment damage resulting from abrupt contact with other materials or equipment.

1.5 QUALITY ASSURANCE

A. All equipment furnished under this section shall comply with OSHA requirements, Crane Manufacturer's Association of America (CMAA), and the Hoist Manufacturer's Institute (HMI).

B. Manufacturers regularly engaged in the manufacture of the type of equipment specified and who can demonstrate equipment of their manufacture in actual service for a period of not less than 15 years will be considered as an acceptable manufacturer. Manufacturers not named in the specification meeting the minimum experience time requirement must submit to the Engineer 15 working days prior to the bid date detailed information describing the equipment proposed to finish. The detailed information shall include but not be limited to dimensional data, materials of construction and an installation list with address, telephone number, and an individual's name directly employed by the owner of the equipment. Plan holders will be notified of approved manufacturers by addendum five (5) working days prior to bid date.

1.6 WARRANTY

A. The manufacturer shall warrant the equipment to be of quality construction, free from defects in materials and workmanship. The warranty shall become effective upon final acceptance by the Owner.

B. Equipment Warranty
1. The equipment, apparatus, and parts furnished shall be warranted for a period of one (1) year from final acceptance date by Owner, excepting only those items that are normally consumed in service, such as light bulbs, oil, grease, packing, gaskets, o-rings, etc.
2. Components failing to perform as specified by the engineers, or as represented by the manufacturer, or as proven defective in service during the warranty period, shall be replaced, repaired, or satisfactorily modified by the manufacturer without cost of parts or labor to the owner.
3. It is not intended that the manufacturer assume liability for consequential damages or contingent liabilities arising out of failure of any product or parts thereof to operate properly, however caused by or resulting from or arising out of defects in design or manufacturer, delays in delivery, replacement, or otherwise.

C. Upon request from the Engineer and/or the Owner, the manufacturer shall demonstrate proof of financial responsibility with respect to performance and delivery date. In addition, the manufacturer shall provide proof of evidence of facilities, equipment, and skills required to produce the equipment specified herein and provide technical service and replacement parts.

D. Components failing to perform as specified by the Engineer, or as represented by the Manufacturer, or proven defective in service during the warranty period, shall be replaced, repaired, or satisfactorily modified by the manufacturer without cost of parts or labor to the Owner.

E. Components failing to perform as specified by the Engineer, or as represented by the Manufacturer, or proven defective in service during the warranty period, shall be replaced, repaired, or satisfactorily modified by the manufacturer without cost of parts or labor to the Owner.

PART 2 PRODUCTS

2.1 DESCRIPTION

A. Jib Cranes and Hoists on the project shall be supplied by a single supplier such as Bridge Crane Specialists, Ace/Gaffey and Four Star Material Management Systems who can not only supply but also service the supplied equipment expeditiously.

B. All component subject to contact with wastewater shall be 316 stainless steel or equivalent corrosion resistant material.

C. Bridge Crane for Northside Headworks shall be designed, built and installed by supplier and shall be stamped by an Oklahoma Registered Structural Engineer (SE.)

D. Contractor shall be responsible to provide a complete working system when installed. Contractor shall ascertain that all necessary structural, mechanical, and electrical equipment parts have been ordered from supplier and assembled to operate the jib crane, electric chain hoist, motorized trolley hoist and bridge crane as intended for the project and it shall be a complete working system.

E. Contractor to coordinate with Drawings / submittals for adjacent equipment & structural elements to verify clearances.

F. Contractor shall provide a boom lock or tie off for the jib boom that meets manufacturer's requirements. Jib boom shall not be allowed to swing freely.

G. Furnish electrical equipment including motors, motor starters, pendant control, control systems, wire, and conduit in accordance with NFPA 70, NEC Article 610. Provide motor suited for harsh environment, including cast aluminum conduit box, epoxy paint, stainless steel nameplate, internal rust inhibitor, and treated and sealed shafts for the motors.

H. Monorail conductor voltage drops from monorail track supply taps shall permit the hoist and trolley motors to operate within voltage tolerances of plus or minus 10 percent, when building supply voltage is at plus or minus 5 percent of design voltage.

I. Festooned Flat Cable Conductors: Flexible cable, carried by heavy-duty roller, permanently lubricated roller bearings, with monorail support system that will dispense and retrieve flexible cable without twisting or tangling, and 20 percent spare conductor in each cable assembly.

J. Grounding: External in accordance with NFPA 70, NEC Article 250. Provide fourth conductor for grounding of system, in accordance with NEC.

K. Jib Cranes
   1. Free standing, base plate mounted with 360° rotation

2. Manufacturer / Model
    1) Spanco, Inc., Series 100, or approved equal
3. Suppliers
    1) Ace/Gaffey
    2) Four Star Material Management Systems
    3) Bridge Crane Specialists
4. Furnish with:
    a. Corrosion resistant coating or primed for field painting
    b. Mounting components
    c. Boom lock (ground accessible) or cast in place tie off
5. Location / Specifications
    a. Northside SBR Basin Motive Pumps
        1) Quantity: 2
        2) Capacity: 5 ton
        3) Span: 18'
        4) Hub: 15'
        5) Furnish With: Motorized rotation arm
    b. Northside FEB Return Lift Station Pumps
        1) Quantity: 1
        2) Capacity: 3 ton
        3) Span: 16'
        4) Hub: 12'
    c. Southside FEB Return Lift Station Pumps
        1) Quantity: 1
        2) Capacity: 3 ton
        3) Span: 15'
        4) Hub: 12'
        5) Furnish With: Motorized rotation arm

L. Motorized Electric Trolley Hoists
1. Coordinate mounting requirements with structural drawings and crane supplier.
2. Voltage and electrical details shall be as indicated on electrical drawings
3. Coordinate with Drawings for lift, pendant and power supply lengths.
4. Manufacturers
    a. Shaw-Box, Harrington, or equal supplied by:
        1) Ace/Gaffey
        2) Four Star Material Management Systems
        3) Bridge Crane Specialists
    b. Shall be supplied as a complete system from a single supplier.
5. Furnish with:
    a. Corrosion resistant coating or primed for field painting
    b. Radio remote controls (if available) in addition to standard controls
    c. Explosion proof components with spark resistant features
    d. Molded composite, resilient bumper installed in the tracks to prevent hoist trolley, and festoon carriers
    e. Additional items deemed necessary for a complete, functional, and safe operating system based on project requirements, conditions and Drawings.
6. Speed
    a. Hoist: 11fpm, minimum, 2 speed
    b. Trolley: 40fpm, minimum, 2 speed

7. Location / Specifications
    a. Northside SBR Basin Motive Pumps
        1) Quantity: 2
        2) Capacity: 5 ton
        3) Type: Wire rope hoist with 316 SS cable
    b. Northside FEB Return Lift Station Pumps
        1) Quantity: 1
        2) Capacity: 3 ton
        3) Type: Chain hoist
    c. Northside Pre-Equalization Basin Pumps
        1) Quantity: 1
        2) Capacity: 3 ton
        3) Type: Chain hoist
    d. Northside Effluent Lift Station Pumps
        1) Quantity: 1
        2) Capacity: 3 ton
        3) Type: Chain hoist
    e. Southside FEB Return Lift Station Pumps
        1) Quantity: 1
        2) Capacity: 3 ton
        3) Type: Chain hoist
    f. Southside Headworks Screens
        1) Quantity: 1
        2) Capacity: 2 ton
        3) Type: Chain hoist
    g. Southside Influent Lift Station Pumps
        1) Quantity: 1
        2) Capacity: 5 ton
        3) Type: Chain hoist

M. Motorized Bridge Crane
    1. Top running single girder crane with dual hoists for lifting dumpster from 2 points
    2. Coordinate mounting requirements with structural drawings
    3. Coordinate with Drawings for lift, pendant and power supply lengths / requirements.
    4. Supplied by:
        a. Ace/Gaffey
        b. Four Star Material Management Systems
        c. Bridge Crane Specialists
    5. Shall be supplied as a complete system by a single supplier.
    6. Furnish with:
        a. VFD for multiple speed travel for Trolley, Bridge & Hoist
        b. Hoist: 11 fpm, minimum
        c. Trolley: 40fpm, minimum
        d. Corrosion resistant coating or primed for field painting
        e. Radio remote controls (if available) in addition to standard controls
        f. Explosion proof components with spark resistant features
        g. Molded composite, resilient bumper installed in the tracks to prevent hoist trolley, and festoon carriers

h. Additional items deemed necessary for a complete, functional, and safe operating system based on project requirements, conditions and Drawings.

7. Supplied as a complete system designed and stamped by an Oklahoma Registered Structural Engineer (SE.)
8. Voltage and electrical details shall be as indicated on electrical drawings
9. Location/Specifications
   a. Northside Headworks Pumps, Dumpsters & Misc Equipment
      1) See drawings for span requirements and structural details
      2) 5 ton (each hoist); Chain
      3) Reach shall be sufficient to extend to bottom of headworks channel.

N. Load Tests
1. The Contractor shall provide all load tests required for the Jib Crane and Trolley Hoist system at 125 percent of rated load (per OSHA standards) and submit results of the test to the Engineer. As a minimum, testing shall be operating the equipment through a complete lift and lowering cycle to determine that the equipment performs smoothly and safely without failure. Such tests shall be carried out with the hoisting equipment loaded as near to the specified capacity as possible. Any defects shall be corrected or replaced immediately by the Contractor and at no expense to the Owner. All testing and the costs of all required certification shall be at the Contractor's expense.

O. Use by Contractor
1. Any hoist used by Contractor during construction shall be repaired, repainted, and otherwise refurbished to like-new condition prior to its acceptance. The Contractor assumes all responsibility for operation and maintenance until the hoist has been accepted by Owner.

PART 3 EXECUTION

3.1 INSTALLATION

A. Installation of equipment shall be in full conformance with the manufacturer's shop drawings and requirements as approved by the Engineer. Wherever a conflict arises between manufacturer's instructions and the contract documents, the contractor shall follow the Engineer's decision at no additional cost to the Owner.

B. Provide all electrical power wiring to a single point connection on the structure for service power. The single point connection shall be a NEMA 4X junction box in a fixed location.

3.2 WORKMANSHIP

A. Handle carefully and protect the equipment and appurtenances to avoid damage.

B. The equipment shall be safely secured to the wall and floor in accordance with the Engineer's design drawings.

C. Any evidence of improper installation shall be corrected by the Contractor. Care during storage, installation and startup shall be in strict accordance with manufacturer's recommendations.

D. Electrical connections, power supply, conduit runs, and anchor bolt installation shall be coordinated and supervised by Prime Contractor and checked for proper installation per manufacturer's recommendations.

E. End stops: Molded composite, resilient bumper installed in the tracks to prevent hoist trolley, and festoon carriers from rolling out of track. Bolt stops without energy absorbing bumper are not acceptable.

3.3 MANUFACTURER'S SERVICES

A. The Contractor shall require the manufacturer to furnish the services of a qualified field engineer to perform the following functions in the designated period of time. These services are to be performed at the jobsite as required by the Engineer/Owner.
   1. Check-out of installation, start-up of equipment and initial operator instruction. This service shall take place after all mechanical equipment associated is installed and mechanically operable.
   2. After equipment is fully operational, and before Owner will assume responsibility for the operation of the equipment, the equipment manufacturer's operation specialists shall instruct the Owner's operating personnel in the care, maintenance and proper operation of the equipment.

B. Drawings and Data
   1. Complete drawings, construction details, and specifications covering the trolley hoists, cranes, and appurtenances shall be submitted in accordance with submittal section.

C. Operation and Maintenance
   1. The equipment system manufacturer shall be responsible for supplying written instruction, which shall be sufficiently comprehensive to enable the operator to operate and maintain all equipment supplied by the manufacturer. Instructions shall assume the operator is familiar with such lifting equipment, but he/she has not previously operated and/or maintained the exact equipment supplied.
   2. Operation and maintenance instruction shall be specific to the equipment supplied in accordance with these specifications.
   3. All costs for the above manufacturer's functions including travel, lodging, meals and incidentals shall be considered to have been included in the contract bid price.

END OF SECTION

SECTION 43_11_16

HIGH EFFICIENCY BLOWER PACKAGES

PART 1 GENERAL

1.1 SUMMARY

A. This specification covers the work necessary to furnish and install high efficiency screw blower system as specified herein and as shown on the plans
   1. Northside WWTP - Universal Blower Pac
      a. Four (4) Blowers @ 150HP
      b. Two (2) Blowers @ 200HP
   2. Spare Parts
      a. One spare filter element for each blower (six total)
      b. Lubricants for 6 months for each blower

B. All components shall be furnished by a single manufacturer who shall be responsible for the performance and compatibility of the system.

1.2 RELATED SECTIONS

A. Section 01_00_01 Basic Requirements

B. Section 01_33_01 General Submittal Requirements

C. Section 01_33_02 Pre-bid Equipment Submittal Requirements

D. The Contract Documents are a complete unit and complementary to each other. The individual Specification sections and other Contract Documents do not contain all cross references to "related work" or "related sections." It is the Contractor's responsibility to review the complete Contract Documents in order to properly scope, schedule and coordinate the work of any/all subcontractors, suppliers, and others on this project. Anything called out in one location of the Contract Documents is binding as if it were called out in all sections of the Contract Documents.

1.3 SUBMITTALS

A. Submittals for products and miscellaneous items in this specification section shall be submitted in accordance with Section 01_33_01 General Submittal Requirements and related submittal sections and provisions of the Contract Documents.

B. The submittals shall consist of a bill of material listing all components the blower system manufacturer will deliver; component Manufacturer's catalog cut sheets listing materials of construction, performance curves/charts, standards of design, warranty statement; prime/paint coating system plus the following information:
   1. Blower
      a. BHP at: normal system operating conditions
      b. Discharge temperature at ambient temperature and normal system operating conditions.

c. L10 bearing life calculations for each bearing.

2. Motor
   a. 1/2, 3/4, full load efficiencies and power factors
   b. L10 bearing life calculations for each bearing.
3. Silencers
   a. An attenuation performance curve for each type of silencer.
4. Pressure Relief Valve
   a. Set pressure
5. Shop drawings of assembled system stating what items will be shipped to the job site assembled and those shipped loose for field assembly.
6. Coupling drive calculations.
7. A list of all exceptions and an explanation of each non-compliance with the specifications.

1.4 REFERENCES

A. The Contractor and/or Manufacturer shall follow the standards listed below, except as otherwise specified herein. The latest revision or edition in effect at the time of bid opening shall be utilized.

1. American National Standards Institute (ANSI) B16.1, B40.1
2. American Society of Mechanical Engineers (ASME) PTC 9
3. American Gear Manufacturers Association (AGMA)
4. American Society of Testing and Materials (ASTM)
5. Anti-Friction Bearing Manufacturers' Association (AFBMA) 9, 11
6. American Society of Heating, Refrigeration and Air Conditioning Engineers (ASHRAE)
7. Institute of Electrical and Electronics Engineers (IEEE)
8. Mechanical Power Transmission Association
9. National Electrical Code (NEC)
10. National Electrical Manufacturers Association (NEMA) MG 1, ICS 6
11. National Fire Protection Association (NFPA) 70
12. Occupational Safety and Health Administration (OSHA)
13. Rubber Manufacturers Association (RMA)
14. Steel Structures Painting Council (SSPC)
15. Underwriters Laboratories (UL)

1.5 DELIVERY, STORAGE & HANDLING

A. Care must be taken during unloading and handling of equipment to ensure against undue strain to the blower and motor. DO NOT use lifting straps or chains under the blower or motor. Lift from under the main frame, base or use base mounted lifting lugs (if provided).

B. In storage blowers must be kept clean, free of moisture and rotated a minimum of 20 revolutions each week to maintain warranty. For storage in excess of four months, or in a damp or corrosive environment see the manufacturer's operation and maintenance manual.

C. Equipment shall be delivered to the jobsite completely factory assembled in accordance with manufacturer’s recommendations. Individual equipment components shall be crated in structurally adequate packing containers to prevent damage during shipping, facilitate ease of handling and to provide suitable protection from weather for extended storage at

the jobsite prior to installation. Packing containers shall be permanently labeled with appropriate equipment identification, shipping address and return address and packing list shall be provided with equipment at time of delivery.

D. Equipment shall be kept thoroughly dry at all times and shall be stored indoors. Equipment storage shall be protected and maintained in accordance with the manufacturer's recommendations. Equipment shall not be stored directly on the ground.

E. Contractor shall utilize equipment and tools of adequate size suitable for unloading, transporting, storing and supporting the equipment during installation. Caution shall be employed to prevent equipment damage resulting from abrupt contact with other materials or equipment. The Contractor shall be responsible for equipment damaged during unloading transportation and storing at no additional cost to the Owner.

1.6 QUALITY ASSURANCE

A. The blower system(s) will be built by a blower system supplier who has units at 50 or more waste water treatment plants, the same size or larger than those specified below, that have been in successful operation for fifteen or more years.

B. All components shall be furnished by a single supplier who shall be responsible for the performance and compatibility of the system.

C. The blower system manufacturer shall be an authorized warranty service center for the bare blower provided.

D. Unnamed manufacturers shall provide a complete technical submittal to the engineer for review at least 15 days prior to the published bid date noting all project specific system performances, curves, drawings, maintenance requirements, and any non-compliances with the specification to qualify for use on the project.

E. Blowers, motors, and all primary components shall be manufactured in the United States with replacements and parts available from multiple sources within the United States.

1.7 WARRANTY

A. The manufacturer shall warrant the equipment to be of quality construction, free from defects in materials and workmanship. The warranty shall become effective upon acceptance of the project by the Owner and final inspection.

B. The equipment, apparatus, and parts furnished shall be warranted from a period of one (1) year, excepting only those items that are normally consumed in service, such as oil, grease, gaskets, o-rings, etc. The manufacturer shall be solely responsible for the warranty of the equipment and all components.

C. Upon request from the Engineer and/or the Owner, the manufacturer shall demonstrate proof of financial responsibility with respect to performance and delivery date. In addition, the manufacturer shall provide proof of evidence of facilities, equipment, and skills required to produce the equipment specified herein and provide technical service and replacement parts.

D. Components failing to perform as specified by the Engineer, or as represented by the manufacturer, or proven defective in service during the warranty period, shall be replaced, repaired, or satisfactorily modified by the manufacturer without cost of kind to the Owner.

E. It is not intended the manufacturer assume liability for consequential damages or contingent liabilities arising out of failure of any product or parts thereof to operate properly, however caused by or resulting from or arising out of defects in design or manufacture, delays in delivery, replacement, or otherwise.

1.8 CONDITIONS OF SERVICE

APPLICATION:	SBR / Standby	Digester
NUMBER OF BLOWERS:	4	2
SITE ELEVATION, FASL:	1060	1060
DESIGN INLET TEMPERATURE, ºF:	100	100
DESIGN RELATIVE HUMIDITY, %:	36	36
SCFM ± 4 %:	788 - 2625	842 - 2806
ICFM ± 4 %:	902 - 3008	965 - 3216
DIFFERENTIAL PRESSURE, PSIG:	9.46	10.36
MAX BHP REQUIRED:	128.8	149.2
RPM LIMIT AT ABOVE SCFM:	2300	2450
MOTOR SIZE, HP:	150	200
SOUND LIMIT REQ. @ 1 METER IN FREE FIELD, dBA:	74	75

PART 2 PRODUCTS

2.1 MANUFACTURES

A. The blower system(s) shall be manufactured by Universal Blower Pac, Inc., Noblesville, Indiana. No substitutions or equals.

2.2 BLOWERS

A. Impellers
1. Hybrid screw design with internal compression, Teflon coated ductile iron; static and dynamically balanced; operate without rubbing, liquid seals or lubrication. Straight lobed impellers and hybrid lobe impellers that do not feature internal compression shall not be acceptable

B. Shafts
1. Cast integrally w/ impellers

C. Timing gears
1. Helical

D. Lubrication
   1. Oil Splash

E. Seals
   1. Labyrinth

F. Attenuation
   1. It is the intention of this section of the contract documents to procure an acoustical enclosure for the specified blower system. The Enclosures shall be designed, assembled and inspected by Universal Blower Pac, Inc. at the manufacturing site with documentation provided to verify the noise reduction demanded in these documents. Noise attenuation shall be provided as necessary to reach the specified sound limit requirement at a distance of 1 meter from the operating equipment in a free field environment. All readings shall be taken by personnel experienced in the field of sound attenuation.
   2. The enclosure herein specified shall be designed and manufactured by the blower system manufacturer specifically for the equipment supplied. Units shall be designed to be picked up by a fork truck. Each acoustical enclosure shall be shipped completely assembled. Each enclosure shall ship installed on the blower system when feasible. No field assembly shall be permitted
   3. Absorption of sound waves shall be the basis of design for the enclosure. Where feasible, only the blower shall be enclosed to meet the demanded sound level. Where necessary, the complete blower system will be enclosed to meet the level specified. With absorption considered, perforated metal inner skin retaining devices shall not be considered acceptable.
   4. Outer skin shall be a minimum 14 gauge powder coated galvannealed steel. Lesser gauges shall not be acceptable.
   5. Absorption media shall be a nominal 2-inch thick resilient material capable of returning to its original form after compression. Media shall have an overall weight of not less than 1.6 pounds per cubic foot. Media sheets shall have an upper oil resistant layer a minimum of three mils in thickness to protect the integrity of the media. Absorption media shall be interior and be fitted to each exterior facet and show contact at all points. Media shall be snug fit, be complete with pressure sensitive adhesive and held in place with washers, studs and cap nuts manufactured from corrosive resistant materials. All adhesives used in anchoring studs or other items in structure shall be high temperature industrial material rated for the application.
   6. Any access plates installed on enclosure for venting or screening shall be installed with self-starting, self-locking zinc plated screws to promote tightness. Rivets or loose fitting panels which can loosen during operation will not be accepted. Slide-in panels showing a loose fit shall provide grounds for rejection. Panels shall be constructed as to compress media on installation providing tightness and maximum sound absorption.
   7. Each enclosure will have service doors, covering at least 80 percent of each side. Hinges for the doors shall be full length and designed for the weight of the door provided. Door shall have a minimum 180 degree swing. All surfaces and edges shall be free of burs and sharp edges. The doors shall lock closed using ½ turn telescoping "T" handles.
   8. Each enclosure will be fitted with a weather hood covered acoustical intake vent rated for the SCFM listed in the "service" section and discharge pipe openings with sound seal.

9. Oil fills and drain extensions, and weather/sound seals will be fitted on all enclosure penetrations as needed
10. A cooling fan with acoustical vent shall be supplied installed on the enclosure. To ensure adequate cooling at all speeds the cooling fan will not be connected to the blower or motor shaft in any way.

2.3 MOTORS

A. The motor will be designed, constructed, warranted for two year operation by a constant-torque variable frequency drive for 10:1 turn down. The insulation shall meet or exceed the current NEMA MG1-31.4.4.2 and have a Class F thermostat in each phase. Motor and variable frequency drive must be capable of starting, accelerating and maintaining blower operating speed within the specified operating range on a continuous basis without overheating.

2.4 COUPLING

A. Motor shall be direct connected to the blower with a grid-flex type coupling having at least 2.0 service factor above the motor nameplate horsepower. Belt drives or gearing mechanisms shall not be acceptable.

2.5 DRIVE GUARD

A. Top, sides and bottom made of 14 gauge sheet steel with expanded metal front and back. Designed to allow ample ventilation for the drive, have an easy access cover and conform to applicable safety codes.

2.6 BASE

A. A steel angle or channel skeleton-frame base, elevated on legs, with continuous welded joints shall be supplied. Bare base weight shall equal 50% or more of the blower's weight, but not less than 100 pounds. The inlet filter, inlet silencer, blower, motor, drive, drive guard, discharge silencer, valves, interconnecting piping, supports and all other accessories shall be shipped assembled on the base to the extent allowable by trucking.

B. The blower system shall be provided with vibration mounts under each leg to separate the rotating equipment base frame from a separate steel sub-base. The sub-base shall be constructed of structural steel and provided with forklift slots to allow transport of the complete system. If an acoustical enclosure is provided it shall be shipped completely assembled and anchored to the sub-base. The two base frames shall be bonded with a grounding strap.

2.7 ACCESSORIES

A. Inlet Filter
1. Each blower shall have a filter with a paper media that removes 99.5% of 2 micron particles. The maximum pressure drop across the clean element and housing shall be less than 2-inches of water column.
2. Filter shall be shipped installed on the inlet silencer and positioned for indoor service. Filter shall be Universal Silencer CF or equal.

B. Silencers

1. 3" and smaller shall be of the premium, straight-through absorptive type. Larger silencers shall be of the multiple-chamber design. Silencers will have acoustically packed nozzle next to blowers operating above transition speed. Silencers with threaded connections shall have ports on each end and those with flanged connections will have ports on the side and end. Multi-chamber silencer attenuation performance shall be at least 18 dB at 63 hertz, 23 dB at 125 hertz, 27 dB at 250 hertz and 31 dB at 500 hertz.
2. Each blower shall have an inlet silencer with an air velocity of 4000 to 5700 feet per minute. Silencer shall be Progentex, Inc. series DS, RSI, DRSI, Universal Silencer, Inc. series U5, URB, RIS, Burgess Manning series CA, BMAI, BMSI Stoddard series L/C21, D13/L41, L61/63 or equal. Combination type inlet filter/silencers shall not be permitted.
3. Each blower shall have a discharge silencer. Based on inlet CFM air velocity shall be 5500 to 7000 feet per minute. Silencer shall be Progentex, Inc. series DS, RS, DRS, Universal Silencer, Inc. series U5, URB, SD, Burgess Manning series CA, BMA, BMSS, Stoddard series L/C21, D13, D32/33 or equal. Combination type discharge silencer/base frames shall not be permitted.

C. Flexible Joint

1. Each blower shall have an inlet and discharge flexible joint that matches the blower ports' size and type of connection. The joint's elastomer must be rated higher than the maximum expected service temperature and pressure.
2. Each blower shall have an external discharge flexible joint that matches the blower discharge silencer size. The joint's elastomer must be rated higher than the maximum expected service temperature and pressure. The flexible joint shall ship installed on the system.

2.8 VALVES

A. Pressure Relief Valve

1. Each blower shall be protected by a spring loaded pressure relief valve preset to start opening at half a PSIG above the PSIG listed in the "service" section, be full open at not more than 10% above the set pressure, and rated for the SCFM and PSIG listed in the "service" section. If the valve malfunctions it shall do so in the open condition to prevent blower damage.

B. Check Valve

1. Each blower shall have a discharge check valve with wafer connection, cast-iron body, cast-iron split discs and seal rated above the maximum anticipated discharge temperature. Valve shall be shipped installed on the system.

C. Isolation Valve

1. Each blower shall have a discharge isolation valve. Valves less than two inches in diameter will be ball valves. Valves 2-inches and larger shall be cast-iron wafer-body butterfly type with a locking handle. Valves more than eight feet above the floor shall have a chain wheel operator. The temperature rating of the seat must exceed the maximum anticipated discharge temperature. The valve shall be shipped installed on the system.

2.9 INSTRUMENTS

A. Filter Restriction Gauge
1. Each inlet filter shall have a filter restriction gauge that progressively measures vacuum in the filter element. A visual indicator, with a manual reset, shall lock at the current vacuum when the blower is shut off.

B. Pressure Guage
1. Each blower shall have a 2 1/2" diameter, stainless steel case, brass bourdon tube, liquid filled, 1/4 NPT connection pressure gauge with a 0-15 PSIG scale on systems operating up to 10 PSIG and 0-30 PSIG for higher pressures. Gauge shall have a 1/4" brass snubber and isolation valve. Gauge shall be Winters 800 or equal.

C. Thermometer / Temperature Switch
1. Each blower shall have a high discharge air temperature switch and thermometer. The thermometer shall have an easy to read 3-1/4" dual scale dial thermometer and a 3A 250VAC / 2A 250VDC SPDT relay in a 304 stainless steel housing. Color coordinated pointers display the current process temperature and set point. A front adjustment knob controls the set pointer. The internal mechanical switch movement prevents the set point pointer from sticking to the process indicating pointer. Brass wetted internal materials have 3 percent accuracy. The thermometer shall have a 10.5' stainless steel capillary with ½" NPT process connection. The electrical connections shall be finger-safe screw terminals. A u-clamp mounting bracket shall be included for mounting to the acoustical enclosure surface.

D. Pressure Switch
1. Each blower shall have a NEMA 3 high discharge pressure switch.

E. Filter Differential Vacuum Switch
1. Each filter shall have a NEMA 3 differential vacuum switch factory preset at 20" WC vacuum.

F. Replacement Parts
1. Each blower shall be furnished with the following spare parts:
a. One spare filter element (six total)
b. Lubricants for 6 months (for each of 6 blowers)

2.10 COATINGS

A. All equipment shall be cleaned to SSPC-SP 3 and receive a 2-3 mil DFT shop coat of phenolic alkyd, zinc-chromate, red iron oxide, rust inhibitive universal primer. The blower systems shall then receive a finish coat of Coronado Alkyd Enamel, 139 series, 50% gloss, high temperature paint. The coat shall be 2-3 mil DFT.

2.11 O&M MANUALS

A. Provided in accordance with these specifications.

PART 3 EXECUTION

3.1 ERECTION/INSTALLATION APPLICATION

A. The following points must be followed to ensure an adequate installation:
   1. The blower pad must be located on the equivalent of compacted soil substructure, which will allow the pad to remain flat, rigid, and free of resonant frequencies within the operating range of the equipment.
   2. The blower must be anchored using bolts intended specifically for dynamic loading.
   3. The unit must be installed and leveled per the manufacturer's instructions supplied in the O&M manual.

3.2 START-UP AND TESTING

A. The blower system supplier shall provide the services of a factory trained technician to check installation, verify proper operation and train the owner's personnel in proper maintenance procedures. Start-up services shall be a minimum of one day.

END OF SECTION

THIS PAGE INTENTIONALLY LEFT BLANK FOR DOUBLE SIDED PRINTING

SECTION 43_23_31.35

NON-POTABLE WATER PUMPS

PART 1 GENERAL

1.1 SUMMARY

A. This specification covers the work necessary to furnish and install non-potable water pumps as specified herein and as shown on the plans
   1. Northside WWTP
      a. Three (3) (one as shelf spare)
      b. 200 gpm @ 207'
   2. Spare Parts
      a. One (1) shelf spare pump

B. Pumps and all associated components as listed above shall be of the same Manufacturer to obtain standardization of performance, operation, spare parts, maintenance and Manufacturer's services.

C. Supplier / manufacturer to review and match requirements of Belt Filter Press. Those requirements supersede any conflicting information provided herein (including pump sizing.)

D. All listed iron and steel products used in this project must be produced in the United States. The term "iron and steel products" means the following products made primarily of iron or steel: lined or unlined pipes and fittings, manhole covers and other municipal castings, hydrants, tanks, flanges, pipe clamps and restraints, valves, structural steel, reinforced precast concrete, and construction materials. The deminimis and minor components waiver apply to this contract for minor components.

1.2 RELATED SECTIONS

A. Section 01_00_01 Basic Requirements

B. Section 01_33_01 General Submittal Requirements

C. Section 01_33_02 Pre-bid Equipment Submittal Requirements

D. The Contract Documents are a complete unit and complementary to each other. The individual Specification sections and other Contract Documents do not contain all cross references to "related work" or "related sections." It is the Contractor's responsibility to review the complete Contract Documents in order to properly scope, schedule and coordinate the work of any/all subcontractors, suppliers, and others on this project. Anything called out in one location of the Contract Documents is binding as if it were called out in all sections of the Contract Documents.

1.3 SUBMITTALS

A. Submittals for products and miscellaneous items in this specification section shall be submitted in accordance with Section 01_33_01 General Submittal Requirements and related submittal sections and provisions of the Contract Documents.

1.4 REFERENCES

A. The Contractor and/or Manufacturer shall follow the standards listed below, except as otherwise specified herein. The latest revision or edition in effect at the time of bid opening shall be utilized.

1.5 DELIVERY, STORAGE & HANDLING

A. Equipment shall be delivered to the jobsite completely factory assembled. Individual equipment components shall be crated in structurally adequate packing containers to prevent damage during shipping, facilitate ease of handling and to provide suitable protection from weather for extended storage at the jobsite prior to installation. Packing containers shall be permanently labeled with appropriate equipment identification, shipping address and return address and packing list shall be provided with equipment at time of delivery.

B. Any electrical motors and components shall be kept thoroughly dry at all times and shall be stored indoors. Equipment storage shall be protected and maintained in accordance with the manufacturer's recommendations. Equipment shall not be stored directly on the ground.

C. Contractor shall utilize equipment and tools of adequate size suitable for unloading, transporting, storing and supporting the equipment during installation and in accordance with manufacturers recommendation. Caution shall be employed to prevent equipment damage resulting from abrupt contact with other materials or equipment.

1.6 WARRANTY

A. The manufacturer shall warrant the equipment to be of quality construction, free from defects in materials and workmanship. The warranty shall become effective upon acceptance of the project by the Owner (after completion of final inspection.)

B. The equipment, apparatus, and parts furnished shall be warranted from a period of one (1) year, excepting only those items that are normally consumed in service, such as oil, grease, gaskets, o-rings, etc. The manufacturer shall be solely responsible for the warranty of the equipment and all components.

C. Upon request from the Engineer and/or the Owner, the manufacturer shall demonstrate proof of financial responsibility with respect to performance and delivery date. In addition, the manufacturer shall provide proof of evidence of facilities, equipment, and skills required to produce the equipment specified herein and provide technical service and replacement parts.

D. Components failing to perform as specified by the Engineer, or as represented by the manufacturer, or proven defective in service during the warranty period, shall be replaced, repaired, or satisfactorily modified by the manufacturer without cost of kind to the Owner.

E. It is not intended the manufacturer assume liability for consequential damages or contingent liabilities arising out of failure of any product or parts thereof to operate properly, however caused by or resulting from or arising out of defects in design or manufacture, delays in delivery, replacement, or otherwise.

PART 2 PRODUCTS

2.1 DESCRIPTION

A. Quantity to be Furnished:
1. Non-Potable Supply Pumps - Three (3) (one as shelf spare)

B. Dimensional and Design Information
1. Non-Potable Water Supply Pump

a.	Liquid Pumped	- Final Effluent
b.	Design Flow Rate - gallons / minute	- 200
c.	Total Head Required - ft.(design)	- 207
d.	Motor - Horsepower (maximum)	- TBD based on flow/head
e.	Motor Service Factor	- 1.15
f.	Motor Enclosure Type	- WP1
g.	Motor Starting Method	- VFD
h.	Motor Ambient Operating Temperature	- 40 C
i.	Electrical Power Volt/Phase/Hz	- 460/3/60
j.	Pump Speed - RPM (maximum)	- 3500
k.	Discharge Size - inches (minimum)	- 6
l.	Discharge Type - ANSI Flange	- Flanged
m.	Casing Working Pressure-PSI(minimum)	- 125

C. Factory Painting
1. Pump, coupling guard and support base shall be prime painted with system compatible with finish coating system specified in Coating Section of these specifications. The motor shall be finished painted with the Manufacturer's standard enamel finish coating and furnished with adequate touch-up paint to repair field damages.

2.2 MATERIALS

A. Non-Potable Water Supply
1. Non-Potable Water Supply
2. Suction Manifold or Bell - A48 Class 30 Cast Iron
3. Bowl - A48 Class 30 Cast Iron
4. Impeller - B584 C83600 Bronze
5. Bowl Wear Ring - B505 C93200 Bronze
6. Bowl Bearings - B505 C93200 Bronze
7. Bowl Sand Collar - B505 C93200 Bronze
8. Impeller Wear Ring - B505 C93200 Bronze

9. Bowl Flange Cap Screw or Stud and Nuts- 303 stainless steel
10. Pump Shaft - A582 - 416 stainless steel
11. Column Pipe - ASTM A 53, grade A, schedule 40 steel pipe
12. Column Line Shafting - AISI 1045 steel
13. Column Coupling - A53 Grade b Steel
14. Column Top Flange Cap Screws - 303 stainless steel
15. Top Bowl Bearing - B505 C93200 Bronze
16. Intermediate Bowl Bearing - B505 C93200 Bronze
17. Suction Bearing - B505 C93200 Bronze
18. Connector Bearing - B505 C93200 Bronze
19. Column Shaft Bearing Retainer Ring - 303 stainless steel
20. Discharge Head – Carbon Steel
21. Packing Container - Class 30 Cast Iron
22. Packing Washer - Brass
23. Packing - Graphited Rope
24. Packing Gland - Cadmium plated Class 30 cast iron
25. Packing Gland T-Bolt - 316 Stainless Steel
26. Packing Gland Clamp - 302 Stainless Steel
27. Packing Gland Nut - 316 Stainless Steel
28. Packing Gland Gasket - Vellumoid
29. Packing Gland Cap Screw - Steel
30. Top Shaft – AISI 1045 Steel
31. Top Shaft Seal Ring - Neoprene
32. Top Shaft Coupling - 410 Stainless Steel
33. Sole Plate - Carbon Steel or CI
34. Sole Plate Gasket - Vellumoid
35. Sole Plate Cap Screws - Carbon Steel

2.3 COMPONENTS

A. Non-Potable Water Supply Pumps

1. The pump bowl assembly shall be of close grained cast iron having a minimum tensile strength of 30,000 pounds per square inch, free from blow holes, sand holes, and all other faults; accurately machined and fitted to close dimensions.
2. The impeller shaft shall be of stainless steel and shall be supported by bronze or neoprene bearings located on both sides of each impeller. The impeller shall be of the enclosed type and shall be of bronze, of heavy construction, accurately fitted and balanced. The impeller shall be locked securely to the impeller shaft with a tapered lock bushing. The bowls and impellers shall be designed with smooth passage to assure efficient operation. The impellers shall be adjustable by means of a top shaft adjusting nut.
3. The pump column pipe shall be furnished in interchangeable sections not over 5 feet in length, and shall be threaded.
4. The line shafting shall be of ample size to operate the pumps without distortion or vibration. The shafts shall be furnished in interchangeable sections not over 5 feet in length, and shall be coupled with extra-long threaded steel couplings machined from solid bar steel. The shaft shall be fitted with stainless steel replaceable sleeves. The column assembly shall have bronze guides fitted into the coupling and secured in place with butted pipe ends. Each guide shall contain a water lubricated rubber bearing designed for vertical turbine pump service.

5. The discharge head shall be the above ground discharge type with machined mounting surface designed for standard NEMA 1 flange motor, the discharge flange shall be furnished with 125-pound ANSI drilling the discharge head shall be fitted with a packing container designed for lubrication with the pumped liquid. A threaded connection shall be provided to allow the lubrication liquid collected in the interior ring of the discharge head to be piped to a local drain. A seal ring shall provided to prevent the lubrication liquid from leakage up onto the motor bearings. Hand hole openings large enough to provide easy access to all adjustable components shall be furnished. Lifting lugs adequately designed to support the entire weight of the pump assembly shall be integrally cast into the discharge head.
6. Sole plate with gasket and cap screws shall be furnished to provide a water tight seal between concrete base and pump and to allow for removal of pump from base without permanently damaging the water tight seal.
7. Drive Motor - The motor shall be the squirrel-cage induction alternating current inverter duty type. The motor nameplate horsepower rating shall not be exceeded at any head capacity point on the pump curve. The motor shall conform to the following:

a.	Synchronous Speed	3600 RPM or as approved
b.	Slip	3 percent maximum at full load
c.	Voltage, phase, & Frequency	460 volts, 3 phase, 60 Hz
d.	Mounting	Vertical, hollow shaft
e.	Enclosure	Weather protected, Type I
f.	Service Factor	1.15
g.	Duty Cycle	Continuous
h.	Ambient Temperature Rating	40 degrees C
i.	Starting Method	VFD
j.	Bearing Lubrication	Manufacturer's standard
k.	Bearing Bio Life	B10 Life-Ave. 25 Years, min 5 Yrs.

PART 3 EXECUTION

3.1 INSTALLATION

A. The general contractor shall assume full responsibility for coordination of the entire project, including verification that all structures, piping, coating systems and equipment components are compatible. The general contractor shall initially operate each equipment system, and shall make all necessary adjustments so that each system is placed in proper operating condition.

B. Equipment and materials utilized for this project must be approved by the Engineer prior to installation. Approval for installation or incorporation in this project will be made only after submittal of manufacturer's shop and installation drawings, test results or other data as required and as specified herein.

C. Installation of equipment shall be in full conformance with the manufacturer shop drawings and requirements as approved by the Engineer. Wherever a conflict arises between manufacturer's instructions and the contract documents, the contractor shall follow the Engineer's decision at no additional cost to the owner.

3.2 WORKMANSHIP

A. Handle carefully and protect the pump and appurtenances to avoid damage. If the pump and column are laid down, support them with blocks to prevent damage.

B. Mount pump and driver on suction barrel as shown on the Drawings. The size of the suction barrel shall be in accordance with pump manufacturer's recommendations.

C. Adjust pump assembly such that the driving unit is properly aligned, plumb, and level with the driven unit and the interconnecting shaft and coupling. Flexible coupling shall not be considered to compensate for misalignment. Install all equipment in accordance with manufactures instructions.

D. Any evidence of pump or driver misalignment, noisy operation, or other signs of improper setting shall be corrected by the Contractor. Care during storage, installation and lubrication shall be in strict accordance with the manufacturer's recommendations.

3.3 ANCHORAGE

A. Anchor bolts shall be furnished for each item of equipment. Anchor bolts, together with templates or setting drawings, shall be delivered sufficiently early to permit setting the anchor bolts when the structural concrete is placed. Two nuts shall be furnished for each bolt. Anchor bolts shall be in place prior to concrete pour.

B. Types of anchorage:
   1. All cast-in-place anchorage shall be 304 stainless steel.
   2. Drill-in anchorage shall be epoxy adhesive type and shall be used only if recommended and allowed by manufacturer.

3.4 LUBRICATION

A. Equipment shall be adequately lubricated by a system which does not require more than once-a-week operator attention, does not require attention during start-up or shutdown and does not waste lubricants.

B. The contractor shall provide lubricants of the type recommended by the equipment manufacturer in sufficient quantity to fill all lubricant reservoirs and to replace all consumption during equipment initial operation, performance testing and operation prior to acceptance of equipment by the owner.

3.5 FIELD PAINTING

A. Painting shall be in accordance with the high performance coating section of these specifications. All ferrous materials which are not non-corrosive shall be painted with epoxy paint systems. Items to be painted which will be exposed to submerged or wet conditions shall be painted with the coal-tar epoxy paint system. Paint systems in contact with water to be used for potable public water supply systems shall be approved by the FDA for this application.

B. Minor defects in the hot-dipped galvanized coating caused by shipping, handling or installation shall be repaired after equipment installation. The defects shall be thoroughly

cleaned and wire-brushed to remove all foreign substances, wiped clean with a damp rag, thoroughly dried, and coated with at least 6 mils of zinc-rich compound.

3.6 MANUFACTURER'S SERVICES

A. The Contractor shall require the manufacturer to furnish the services of a qualified field engineer to perform the following functions in the designated periods of time. These services are to be performed at the jobsite.
   1. Check-out of installation, start-up of equipment and initial operator instruction. This service shall take place after all mechanical equipment associated with the control system is installed and mechanically operable.
   2. After equipment is fully operational, and before Owner will assume responsibility for the operation of the equipment, the equipment manufacturer's operation specialists shall instruct the Owner's operating personnel in the care, maintenance and proper operation of the equipment.

B. Field Test
   1. Prior to plant startup, all equipment described herein shall be inspected for proper alignment, quiet operation, proper connections, and satisfactory performance by means of a functional test.
   2. The pump and motor assembly shall be field tested to verify vibration is not in excess of the limits stated in the latest revision of Hydraulic Institute and NEMA MG 1.
   3. The pumps, motors, and controls shall be given an operational test in accordance with the standards of the Hydraulic Institute. Recordings of the test shall substantiate the correct performance of the equipment at the design head, capacity, suction lift, speed and horsepower as herein specified.
   4. Units failing to meet the Specifications and to the satisfaction of the Owner must be more accurately tested in accordance with Hydraulic Institute Standards. If the pump fails the second test, the unit will be rejected, and the Contractor shall remove the unit that is rejected, and the Contractor shall furnish a unit that will perform as specified.

C. Instructions for installation of the pump and related appurtenances shall be written and furnished by the manufacturer. Contractor shall follow these instructions in installing the equipment.

D. Operation and maintenance materials
   1. The pump manufacturer shall be responsible for supplying written instruction, which shall be sufficiently comprehensive to enable the operator to operate and maintain the pump and all equipment supplied by the manufacturer. Instructions shall assume that the operator is familiar with pumps, motors, piping, valves, and controls, but that he has not previously operated and/or maintained the exact equipment supplied.
   2. The instruction shall be prepared as a system manual applicable solely to the pump and equipment supplied by the manufacturer to these specifications, and shall include those devices and equipment supplied by him.
   3. Operation and maintenance instruction shall be specific to the equipment supplied in accordance with these specifications. Instruction manuals applicable to many different configurations and pump stations, and which require the operator to selectively read portions of the instructions shall not be acceptable.

E. All costs for the above manufacturer functions including travel, lodging, meals, and incidental shall be considered to have been included in the Contractor's lump sum bid price.

END OF SECTION

SECTION 43_23_58.03

POSITIVE DISPLACEMENT ROTARY LOBE PUMPS

PART 1 GENERAL

1.1 SUMMARY

A. This specification covers the work necessary to furnish and install positive displacement rotary lobe pumps as specified herein and as shown on the plans.
   1. Northside WWTP – 2 units - Netzsch Tornado (140 gpm @30')
   2. Spare Parts:
      a. One rear wear plates for each pump model.
      b. One front wear plates or front hinged front cover for each model.
      c. One set of radial wear plates or two radial housing sections for each model pump (if applicable).
      d. One set of rotors for each model pump.
      e. One set of mechanical seals for each model pump.
      f. One front cover o-ring or gasket for each model pump.

B. Supplier / manufacturer to review and match requirements of Belt Filter Press. Those requirements supercede any conflicting information provided herein (including pump sizing.)

C. All listed iron and steel products used in this project must be produced in the United States. The term "iron and steel products" means the following products made primarily of iron or steel: lined or unlined pipes and fittings, manhole covers and other municipal castings, hydrants, tanks, flanges, pipe clamps and restraints, valves, structural steel, reinforced precast concrete, and construction materials. The deminimis and minor components waiver apply to this contract for minor components.

1.2 RELATED SECTIONS

A. Section 01_00_01 Basic Requirements

B. Section 01_33_01 General Submittal Requirements

C. Section 01_33_02 Pre-bid Equipment Submittal Requirements

D. The Contract Documents are a complete unit and complementary to each other. The individual Specification sections and other Contract Documents do not contain all cross references to "related work" or "related sections." It is the Contractor's responsibility to review the complete Contract Documents in order to properly scope, schedule and coordinate the work of any/all subcontractors, suppliers, and others on this project. Anything called out in one location of the Contract Documents is binding as if it were called out in all sections of the Contract Documents.

1.3 SUBMITTALS

A. Submittals for products and miscellaneous items in this specification section shall be submitted in accordance with Section 01_33_01 General Submittal Requirements and related submittal sections and provisions of the Contract Documents.

1.4 WARRANTY

A. The manufacturer shall warrant the equipment to be of quality construction, free from defects in materials and workmanship. The warranty shall become effective upon acceptance of the project by the Owner (after completion of final inspection.)

B. The equipment, apparatus, and parts furnished shall be warranted from a period of one (1) year, excepting only those items that are normally consumed in service, such as oil, grease, gaskets, o-rings, etc. The manufacturer shall be solely responsible for the warranty of the equipment and all components.

C. Upon request from the Engineer and/or the Owner, the manufacturer shall demonstrate proof of financial responsibility with respect to performance and delivery date. In addition, the manufacturer shall provide proof of evidence of facilities, equipment, and skills required to produce the equipment specified herein and provide technical service and replacement parts.

D. Components failing to perform as specified by the Engineer, or as represented by the manufacturer, or proven defective in service during the warranty period, shall be replaced, repaired, or satisfactorily modified by the manufacturer without cost of kind to the Owner.

E. It is not intended the manufacturer assume liability for consequential damages or contingent liabilities arising out of failure of any product or parts thereof to operate properly, however caused by or resulting from or arising out of defects in design or manufacture, delays in delivery, replacement, or otherwise.

PART 2 PRODUCTS

2.1 MATERIALS/EQUIPMENT

A. General:
   1. Pump Type: Heavy-duty rotary lobe, horizontal pumps.
   2. Major Required Features:
      a. Pumps must be designed with a Gearbox Security System (GSS), an open gap between pump head and pump bearing housing in order to prevent the product from entering the bearing housing in the event of shaft seal failure.
      b. Pumps that do not have an open gap between the wet end and the bearing housing will not be acceptable.
   3. The equipment covered by these Specifications shall be of standard design, and of proven ability as manufactured by reputable concerns having long experience in the production of such equipment. The equipment furnished shall be designed, constructed, and installed in accordance with the best practice and methods, and shall operate satisfactorily when installed as shown on the Drawings.

4. All equipment shall be designed and built for 24-hour continuous service at any and all points within the specified range of operation, without overheating, and without excessive vibration or strain.
5. Pump design shall allow run dry for a temporarily period of time, without damage to the pump, or its internals.
6. Pumps must have design option to integrate a dry running protection in the rotor case in terms of unlikely very long period of dry running.
7. The pumping units required under this section shall be complete. All parts shall be so designed and proportioned as to have liberal strength, stability, and stiffness and to be especially adapted for the service to be performed. Ample room for inspection, repairs and adjustment shall be provided.
8. All working parts of the pumps and motors, such as bearings, wearing rings, shaft, sleeves, etc., shall be standard dimensions built to limit gauges or formed to templates, such that parts will be interchangeable between like units and such that the Owner may, at any time in the future, obtain replacement and repair parts for those furnished in the original machines.
9. Mechanical equipment, including drives and electric motors shall be supplied and installed in accordance with applicable OSHA regulations. The noise level of the pumps shall not exceed 85 dBA measured 3 meters from the unit under free field conditions.
10. All lubrication fittings shall be brought to the outside of all equipment so that they are readily accessible from the outside without the necessity of removing covers, plates, housings, or guards.
11. Performance Requirements:
    a. 140 GPM @ 30' TDH, 7.5 HP motor.
    b. There shall be no significant vibration or change in vibration and noise level over the entire listed range of operating conditions of the pumping system.
12. Maximum motor speed shall not exceed 1800 rpm.

B. Pump Construction
1. Pump Housing:
    a. The pump housing shall be constructed of cast iron GG25. Suction and discharge ports shall be 150 lb. ANSI flanged.
    b. The housing shall be of modular construction with components that make up the housing dowelled to provide and maintain repeatable relative position. In terms of wear or unlikely damages, radial housing sections or wear plates must be easily removable.
    c. The pump head flanges shall provide a smooth transition from circular port to connections at the flanges, to a full width rectangular port at the rotor chamber, with a greater cross sectional area than at the flanged port connection, to allow for unimpeded passage of solids.
    d. The front cover shall incorporate a compression fit seal for sealing between front cover and rotor case. All fasteners shall be stainless steel.
2. Radial wear plates: Pumps without replaceable radial housing sections, shall be provided with radial wear plates.
    a. The removable wear plates shall be 40 Rockwell C AISI 4140 carbon steel wear plates that will protect the wear of the rotor case.
    b. The wear plates must be easy to remove and fixed/bolted at the in- and outlet of the rotor case.

3. Rear and Front wear plates: Pumps must have rear and front wear plates. The front and rear wear plate shall be easy to remove and easily accessible.
4. Front Cover:
    a. The pumps shall be provided with a quick release front cover or hinged to open. Front covers shall incorporate replaceable wear plate in an abrasion resistant material Hardox 500.
    b. The quick release front cover must be held with only 4 screws at the housing, thus maintain the repeatable relative position.
5. Rotors:
    a. The pump shall be fitted with a pair of intermeshing rotors with a minimum of four lobes in helical low pulse design, in order to give lowest possible pulsation and thus safe operation for the complete sludge handling process. The rotors must be constructed from cast iron GG25 covered with an abrasion resistant elastomer.
    b. The elastomeric coated rotors shall be guaranteed against "bonding failure" otherwise known as delamination.
    c. The rotors shall be end-mounted on the shafts and held precisely in the radial position. This shall ensure the positive positioning of the rotors on the shaft as well as providing precise intermeshing clearances around the rotors. The rotors shall be axially locked into position.
6. Shafts:
    a. The shafts shall be constructed of carbon steel and be appropriately sized and heat treated to ensure a smooth operation and concentric positioning on the rotors.
    b. Total length of shafts must be as short as possible in order to avoid any shaft deflection. Long shaft overhang at pump head side is not acceptable
    c. The motor driven shaft shall be either the upper shaft or lower shaft as determined by the centerline height of the driver.
    d. The shafts shall be non-wetted at all points and sealed from the pumped liquid.
    e. Shafts shall be fitted with replaceable stainless steel sleeves.
    f. Shafts with sludge contact below shaft seal sleeve are not acceptable due to risk of corrosion.
7. Bearings and Timing gears: Each shaft shall be supported by heavy-duty cylindrical- and roller bearings. Synchronization of shafts shall be done by hardened and ground high precision timing gears.
    a. The bearings must be housed in the gearbox and positioned either side of the timing gears in order to give the best shaft support.
    b. The bearings and timing gears shall be well lubricated by oil contained the gearbox lubrication reservoir.
8. Pumps without oil lubricated bearings shall have bearing isolators.
    a. Bearing Isolators:
        1) The bearings shall be completely protected from water or sludge by grease packed stainless steel labyrinth bearing isolators providing full protection with the pump either operating or idle. The gearcase wall adjacent to the rotor case shall be sealed from water or sludge penetration by a pair of non-wearing stainless steel AISI 316, grease filled, labyrinth-bearing isolators.
9. Gearcase:
    a. The gear case shall be constructed of cast iron and incorporate a separate oil reservoir for the bearings of each shaft to ensure adequate lubrication

at low running speed. Sealed expansion chambers shall be used for vent caps preventing any air transfer to and from the gearbox.

b. The design shall be a gear case security system (GSS) or open gap for highest possible reliability. Pumps without open gap between gear case and rotor case are not acceptable.

10. Mechanical Seals: Each pump shall be supplied with mechanical shaft seals. Shaft seals must be of heavy duty simple and robust design in order to allow high operation safety and easy servicing. The rotating and static seal faces must be abrasive resistant silicon carbide to silicon carbide seal surfaces, elastomer in NBR quality. Each shaft seal must have flushing connections for grease, oil or water lubrication. Shaft seals must be front loading seals and internal mounted. Designs requiring the removal of the rotor case for seal replacement will not be acceptable.
11. Couplings: Furnish a flexible, forged steel coupling of an approved type for connecting the pump, reducer and motor. Provide couplings of the proper size to transmit the power required to drive the pump under all conditions of operation.
12. OSHA approved guards shall be furnished over all couplings.
13. Pump Dimensions and Arrangement: Each pump shall be arranged in an in-line, L-Shape or Piggy-back arrangements as shown on the drawings.
14. Common Steel Base: Factory mount pump and motor, coupled together, on a common groutable steel base, properly braced to form a rigid support for the entire unit. Factory align the units on the base prior to shipment (final alignment to be performed in field following base grouting and piping connections).

C. Pump Manufacturer:
1. The following pump manufacturer and model has been approved for use on this contract through a formal pre-selection process. No other pump manufacturer or model will be allowed.
a. Manufacturer: NETZSCH TORNADO®

D. Motors:
1. Motor shall be non-overloading at any performance point without using any of the service factor.

E. Grout: Comply with Specification Sections

2.2 SPECIAL TOOLS, SPARE PARTS AND MAINTENANCE MATERIALS

A. Special Tools:
1. Each pump shall be furnished with any special tools required to maintain and adjust equipment.

B. Spare Parts: Provide:
1. One rear wear plates for each pump model.
2. One front wear plates or front hinged front cover for each model.
3. One set of radial wear plates or two radial housing sections for each model pump (if applicable).
4. One set of rotors for each model pump.
5. One set of mechanical seals for each model pump.
6. One front cover o-ring or gasket for each model pump.

C. Maintenance Materials:

1. Provide lubricants (greases and/or oils) necessary to maintain each pump for the two years of operation.

2.3 PAINTING

A. Provide a manufacturers standard factory applied epoxy coating to pump, reducer, motor, base and coupling guards.

2.4 NAMEPLATE

A. Each pump shall be provided with a stainless steel nameplate suitably attached. Nameplate shall also be attached to the pump which shall contain identification of the frame and serial number, type and model number. Provide nameplates with similar information for motor and gear reducer.

2.5 SOURCE QUALITY CONTROL

A. Factory Testing:
1. Factory testing in accordance with the standards of the Hydraulic Institute shall be required for all pumps. All pumps shall be tested complete with drives at the Lobe Pump Manufacturer facility.
2. Certified pump performance curves shall be submitted, including head, capacity, and brake horsepower for each pump supplied.
3. All Lobe Pumps shall be tested at full speed and complete staging through the specified range of flow, and head/capacity/efficiency curves plotted at maximum output speed. During each test, the pump shall be run at each head condition for sufficient time to accurately determine discharge, head, power input, and efficiency.
4. If any pump tested fails to meet any specific requirement it shall be modified until it meets all specification requirements. If any pump tested fails to meet the efficiency requirements at any of the listed flow or head conditions listed and all reasonable attempts to correct the inefficiency are unsuccessful, the pump(s) shall be replaced with unit(s) which meet the specified requirements.
5. Submit Factory Test Report for each tested pump.

PART 3 EXECUTION (NOT USED)

END OF SECTION

SECTION 43_25_13.13

SUBMERSIBLE PUMP SYSTEM

PART 1 GENERAL

1.1 SUMMARY

A. Contractor shall provide a complete submersible pumping system. The supplier shall coordinate the equipment requirements with the mechanical and electrical requirements of the Contract Documents, shall integrate the equipment furnished with the requirements shown on the electrical drawings, and provide complete installation and interconnection drawings and diagrams required for installation, start-up, testing and adjustment.

B. The pumping system shall consist of submersible pumps, the electrical components, discharge check valves, plug valves, and a level control system located as shown on the Drawings and specified herein.

C. All pumps when shipped shall be provided with a stainless steel tag or other system as recommended that denotes basin name, HP & GPM minimum so that Contractor may visually verify pumps are being placed in correct location.

D. All listed iron and steel products used in this project must be produced in the United States. The term "iron and steel products" means the following products made primarily of iron or steel: lined or unlined pipes and fittings, manhole covers and other municipal castings, hydrants, tanks, flanges, pipe clamps and restraints, valves, structural steel, reinforced precast concrete, and construction materials. The deminimis and minor components waiver apply to this contract for minor components.

1.2 RELATED SECTIONS

A. Section 01_00_01 Basic Requirements

B. Section 01_33_01 General Submittal Requirements

C. Section 01_33_02 Pre-bid Equipment Submittal Requirements

D. The Contract Documents are a complete unit and complementary to each other. The individual Specification sections and other Contract Documents do not contain all cross references to "related work" or "related sections." It is the Contractor's responsibility to review the complete Contract Documents in order to properly scope, schedule and coordinate the work of any/all subcontractors, suppliers, and others on this project. Anything called out in one location of the Contract Documents is binding as if it were called out in all sections of the Contract Documents.

1.3 SUBMITTALS

A. Submittals for products and miscellaneous items in this specification section shall be submitted in accordance with Section 01_33_01 General Submittal Requirements and related submittal sections and provisions of the Contract Documents.

1.4 REFERENCES

A. The Contractor and/or Manufacturer shall follow the standards listed below, except as otherwise specified herein. The latest revision or edition in effect at the time of bid opening shall be utilized.

1.5 DELIVERY, STORAGE & HANDLING

A. Individual equipment components shall be crated in structurally adequate packing containers to prevent damage during shipping, facilitate ease of handling, and to provide suitable protection from weather for extended storage at the jobsite prior to installation. Packing containers shall be permanently labeled with appropriate equipment identification, shipping address and return address. Packing list shall be provided with equipment at time of delivery.

B. Any electrical equipment shall be kept thoroughly dry at all times and shall be stored indoors. Equipment storage shall be protected and maintained in accordance with the manufacturer's recommendations. Equipment shall not be stored directly on the ground.

C. Contractor shall utilize equipment and tools of adequate size suitable for unloading, transporting, storing and supporting the equipment during installation. Caution shall be employed to prevent equipment damage resulting from abrupt contact with other materials or equipment.

1.6 QUALITY ASSURANCE

A. The Contractor shall note that the Submersible Pumping System is an integrated system which shall be furnished, factory assembled and integrated by one manufacturer or supplier who shall provide all of the equipment and appurtenances regardless of the manufacturer of the various components.

B. The entire System shall be designed, coordinated and supplied by a company regularly engaged in the business of designing and fabricating pumping systems. The pumps and motors shall be manufactured by ISO-9001 certified companies only. All pumps shall be as manufactured by Fairbanks Morse. No substitution or equals.

1.7 WARRANTY

A. The manufacturer shall warrant the equipment to be of quality construction, free from defects in materials and workmanship. The warranty shall become effective upon acceptance of the project by the Owner (after completion of final inspection.)

B. The equipment, apparatus, and parts furnished shall be warranted from a period of one (1) year from the date of final acceptance by Owner, excepting only those items that are normally consumed in service, such as oil, grease, gaskets, o-rings, etc. The manufacturer shall be solely responsible for the warranty of the equipment and all components.

C. Upon request from the Engineer and/or the Owner, the manufacturer shall demonstrate proof of financial responsibility with respect to performance and delivery date. In addition, the manufacturer shall provide proof of evidence of facilities, equipment, and skills required

to produce the equipment specified herein and provide technical service and replacement parts.

D. Components failing to perform as specified by the Engineer, or as represented by the manufacturer, or proven defective in service during the warranty period, shall be replaced, repaired, or satisfactorily modified by the manufacturer without cost of kind to the Owner.

PART 2 PRODUCTS

2.1 SUBMERSIBLE PUMPS

A. General

1. Furnish and install pull-up submersible pumping units as described below, UL Listed for explosion proof Class 1, Group C and D hazardous location in air or submersible in water and sewage. The pumps shall be clockwise rotation and constructed to automatically connect to the discharge piping when lowered into place.

B. Conditions of Operation

1. Each pump shall be capable of providing the following hydraulic conditions when pumping domestic sewage:

SS High Service Pumps:

Quantity	Three (3), One is Spare
Capacity	3,600 GPM
Total Dynamic Head	172 Ft.
Minimum Dynamic Head	148 Ft.
Minimum Pump Efficiency at Design	72 %
BHP at Design	231 HP
Motor Size Required	250 HP
Maximum Speed	1785 RPM
Minimum Shutoff Head	282 Feet
Maximum NPSHr at Design	28.35 Feet
Minimum Solid Size	3 Inches
Size Guide Rails Required	3" SCH 40 304SS Pipe
Discharge Elbow Size(Minimum)	10"
Grout Pad Height Required Under Base Elbow	6.5"
Minimum Pump Weight	5,700#

SS Stormwater Pumps:

Quantity	Two (2)
Capacity	6,000 GPM
Total Dynamic Head	36 Ft.
Minimum Dynamic Head	12 Ft.
Minimum Pump Efficiency at Design	82.5 %
BHP at Design	68 HP
Motor Size Required	75 HP
Maximum Speed	889 RPM
Minimum Shutoff Head	57 Feet
Maximum NPSHr at Design	15.9 Feet

Minimum Solid Size	3.25 Inches
Size Guide Rails Required	3" SCH 40 304SS Pipe
Discharge Elbow Size(Minimum)	14"
Grout Pad Height Required Under Base Elbow	5"
Minimum Pump Weight	4,700#

SS Stormwater Return Pumps:

Quantity	Two (2)
Capacity	3,200 GPM
Total Dynamic Head	12 Ft.
Minimum Dynamic Head	-2 Ft (Pinch Valve added)
Minimum Pump Efficiency at Design	83 %
BHP at Design	16.4 HP
Motor Size Required	20 HP
Maximum Speed	711 RPM
Minimum Shutoff Head	26.6 Feet
Maximum NPSHr at Design	10.3 Feet
Minimum Solid Size	4.5 Inches
Size Guide Rails Required	3" SCH 40 304SS Pipe
Discharge Elbow Size	12"
Grout Pad Height Required Under Base Elbow	6.5"
Minimum Pump Weight	3,400#

NS SBR Motive Pumps:

Quantity	Three (3)
Capacity	9,519 GPM
Total Dynamic Head	19 Ft.
Minimum Dynamic Head	13 Ft.
Minimum Pump Efficiency at Design	81.5 %
BHP at Design	56 HP
Motor Size Required	75 HP
Maximum Speed	507 RPM
Minimum Shutoff Head	28 Feet
Maximum NPSHr at Design	10 Feet
Minimum Solid Size	4.37 Inches
Size Guide Rails Required	3" SCH 40 304SS Pipe
Discharge Elbow Size	20"
Grout Pad Height Required Under Base Elbow	6.5"
Minimum Pump Weight	6,000#

NS Headworks:

Quantity	Four (4)
Capacity	3,500 GPM
Total Dynamic Head	59 Ft.
Minimum Dynamic Head	20 Ft.
Minimum Pump Efficiency at Design	75 %
BHP at Design	67 HP
Motor Size Required	75 HP
Maximum Speed	1185 RPM
Minimum Shutoff Head	78 Feet
Maximum NPSHr at Design	26 Feet

Minimum Solid Size	4.5 Inches
Size Guide Rails Required	3" SCH 40 304SS Pipe
Discharge Elbow Size	12"
Grout Pad Height Required Under Base Elbow	6.5"
Minimum Pump Weight	3,900#

NS Pre-Eq to SBR:

Quantity	Four (4)
Capacity	4,700 GPM
Total Dynamic Head	20 Ft.
Minimum Dynamic Head	-4 Ft. (BFV on SBR Assists)
Minimum Pump Efficiency at Design	79 %
BHP at Design	30.3 HP
Motor Size Required	40 HP
Maximum Speed	711 RPM
Minimum Shutoff Head	32 Feet
Maximum NPSHr at Design	11 Feet
Minimum Solid Size	5.25 Inches
Size Guide Rails Required	3" SCH 40 304SS Pipe
Discharge Elbow Size	14"
Grout Pad Height Required Under Base Elbow	5"
Minimum Pump Weight	4,700#

NS Stormwater Return:

Quantity	Two (2)
Capacity	3,250 GPM
Total Dynamic Head	22 Ft.
Minimum Dynamic Head	-17 Ft. (pinch valve added)
Minimum Pump Efficiency at Design	81.5 %
BHP at Design	25.7 HP
Motor Size Required	30 HP
Maximum Speed	889 RPM
Minimum Shutoff Head	40 Feet
Maximum NPSHr at Design	14.9 Feet
Minimum Solid Size	4.5 Inches
Size Guide Rails Required	3" SCH 40 304SS Pipe
Discharge Elbow Size	12"
Grout Pad Height Required Under Base Elbow	6.5"
Minimum Pump Weight	3,400#

NS Effluent:

Quantity	Three (3)
Capacity	6,000 GPM
Total Dynamic Head	30 Ft.
Minimum Dynamic Head	3 Ft.
Minimum Pump Efficiency at Design	77 %
BHP at Design	57 HP
Motor Size Required	75 HP
Maximum Speed	889 RPM
Minimum Shutoff Head	47.7 Feet
Maximum NPSHr at Design	17.7 Feet

Minimum Solid Size	5.25 Inches
Size Guide Rails Required	3" SCH 40 304SS Pipe
Discharge Elbow Size	14"
Grout Pad Height Required Under Base Elbow	5"
Minimum Pump Weight	4,700#

C. Impeller

1. The impeller shall be of one-piece, single suction, enclosed two-vane, radial flow design with well-rounded leading vane edges and thick hydrofoil shape with large openings to prevent the accumulation of solids and stringy material through the impeller. The impeller shall be made of close-grained cast iron conforming to ASTM A48 Class 30. It is to be balanced and secured to a straight fit on the shaft by means of a key and fastener. Wiper vanes are not allowed. The impeller waterways and clearance between the impeller periphery and volute cutwater shall be capable of passing a sphere as listed above and is to be matched to a constant velocity equalizing pressure volute. Impeller shall be trimmed to specifically meet the conditions of operation and be fitted with an axial (face-type), stainless steel wear ring with a minimum 300-350 Brinell hardness. The impeller shall be adjustable by use of shims to restore the wear ring clearance in the field. **Radial or non-adjustable wear rings will not be accepted.**

D. Volute & Sliding Bracket

1. The volute shall be one-piece cast with side centerline flanged discharge. The volute shall be made of close-grained cast iron conforming to ASTM A48 Class. It is to be one-piece, constant velocity equalizing pressure with smooth fluid passages large enough to pass any size solid that can pass through the impeller. Volute shall be fitted with an axial (face-type) stainless steel wear ring with a minimum 300-350 Brinell hardness. Diffusion vanes are not permitted. The sliding bracket assembly shall be a part of the pumping unit constructed so that when lowered to the discharge base/elbow, the knifing action of the vertical metal-to-metal seal provides a self-cleaning, non-clogging, UL Listed, non-sparking assembly. **Pump pull-out systems that are not UL Listed non-sparking will not be accepted.**

E. Guiderail / Bracket

1. Two stainless steel guide rails shall be provided on which the pump rides when being raised or lowered in the sump and mount on the discharge base/elbow. Single rail or cable guide systems are not acceptable. The rails shall align the pump with the discharge elbow as it is lowered into place. A stainless-steel upper guide rail bracket shall be furnished to support and align the rails at the top of the sump. For guide rail lengths greater than 20 feet, a stainless-steel intermediate rail guide bracket shall be provided every ten feet.

F. Discharge Base

1. A rigid discharge base-elbow to support the total weight of the pumping unit shall be provided. The base is to be bolted directly to the floor with the 90 Degree elbow having a 125 lb. ANSI flange discharge vertically.

G. Motor

1. Each submersible solids-handling pump shall be driven by a completely sealed, electric submersible squirrel cage induction motor, 1.15 service factor, 460 volts, 3 phase, 60 Hertz power. The motor nameplate horsepower rating shall not be exceeded by the brake horsepower requirements at any head and capacity condition on the operating curve. Motor shall be rated for VFD service.
2. The submersible motor shall be UL Listed for Class I, Division 1, Group C and D explosion-proof hazardous locations as defined by the National Electric Code. All electrical parts shall be housed in an air-filled, cast iron, water-tight enclosure which is sealed by the use of O-rings and shall have rabbet joints with an extra-large overlap.
3. The stator-winding and lead shall be insulated with moisture-resistant Class F insulation for continuous duty in 40 Degree C rise liquids. The motor shall be designed for continuous duty capable of minimum of ten (10) starts per hour. The motor shall not draw more than the nominal listed motor HP at rated voltage on point on the operating curve. Automatic reset, normally closed thermal overloads shall be imbedded in the motor winding to provide overheating protection. Motor winding thermostats shall be connected to an electrical controller per local and state codes, and the National Electric Code.
4. Motor shaft shall be 416 stainless steel. Carbon steel shafts or shaft sleeves are not acceptable. The rotor is to be dynamically balanced to meet NEMA vibration limits; all hardware to be stainless steel. Cable leads are to allow the connection of a cable to the motor, to be accomplished in the field without soldering cable. All leads are to be sealed and designed to prevent cable-wicking to conduit box located on top of the motor. The sealing system shall consist of a rubber grommet followed by epoxy that is high in adhesive qualities and has a low coefficient of expansion. Each cable wire is to have a small section of insulation removed to establish a window area of bare wire and each wire is to be untwisted and surrounded by epoxy potting material. A cable strain relief mechanism shall be an integral part of the sealing system. Cable sealing system shall be capable of withstanding an external pressure test of 1200 PSI as well as a cable assembly pull test as required of Underwriters Laboratories. Singular grommet or other similar sealing systems are not acceptable. Motor shall be supplied with 30 feet of multi-conductor type "SOW-A" or "W" power cable and control cable. Cable sizing shall conform to NEC specifications and be UL listed.
5. Power and control leads shall be terminated on a sealed terminal board. The terminal board and its bronze lugs shall be O-ring sealed.
6. Each pump shall be provided with two separate tandem-mounted mechanical seals to prevent the pumped liquid from entering the rotor/stator cavity area to ensure reliability of operation. The upper and lower seals are mounted to rotate in the same direction. The mechanical seals must be commercially available and manufactured by a major seal manufacturer such as John Crane or equal.
7. The upper seal is to be completely immersed in an oil bath and seals the oil chamber and the motor housing. The lower seal mating surfaces are to be immersed in the oil bath sealing the pump volute and the oil chamber. Each seal shall be held in contact by its own spring system and require neither maintenance nor adjustment, but shall be easily inspected and replaceable. The lower seal spring shall be protected from trash in the pumped fluid by a spring cover, which extends over the entire length of the compressed seal spring. Pressure generated by the pump assists in sealing the mating surfaces of the lower seal.
8. Seal materials for the upper and lower seals shall be stainless steel and Buna-N components. The upper seal shall have the carbon rotating face rotating against a

Ni-Resist stationary face. The lower seal shall have a silicon carbide rotating face against a tungsten carbide stationary face.

9. Two moisture detection probes shall be installed so that they will detect moisture in either the seal or stator cavity measuring resistivity between the probes. They shall be wired internally to the control cable connection at the top of the motor. Float type devices located in the rotor/stator area or single probe-to-ground moisture detectors measuring continuity are not acceptable. O-ring sealed inspection plugs shall be provided in the mechanical seal oil chamber for ease in inspection, draining, and filling of oil.
10. The pump shall rotate on a minimum of two bearings permanently lubricated but capable of being re-greased, suitable for a minimum L10 bearing life of 40,000 hours. All mating surfaces shall be machined and fitted and sealed with O-rings. Fittings shall be accomplished by metal-to-metal contact between each machine surface, resulting in controlled compression with O-rings, without requirement of a specific torque limit. No secondary sealing compound shall be used.
11. A heavy-duty stainless steel lifting bail shall be included and be of adequate strength to lift the entire pump and motor assembly.

H. Lifting Chains

1. Each pump shall be provided with 304 stainless steel chain of sufficient length and lifting capacity to allow for the installation and removal.

PART 3 EXECUTION

3.1 GENERAL

A. The general contractor shall assume full responsibility for coordination of the entire project, including verification all structures, piping, coating systems and equipment components are compatible. The general contractor shall initially operate each equipment system, and shall make all necessary adjustments so that each system is placed in proper operating condition.

B. Equipment and materials utilized for this project must be approved by the Engineer prior to installation. Approval for installation or incorporation in this project will be made only after submittal or manufacturer's shop and installation drawings, test results or other data as specified herein.

C. Installation of equipment shall be in full conformance with the manufacturer's shop drawings and requirements as approved by the Engineer. Wherever a conflict arises between manufacturer's instructions and the contract documents, the contractor shall follow the Engineer's decision at no additional cost to the Owner.

3.2 WORKMANSHIP

A. Handle carefully and protect the equipment and appurtenances to avoid damage.

B. The equipment shall be safely secured to the wall and floor in accordance with the Engineer's design drawings. All plumbing and electrical shall be in accordance with state and federal codes to ensure proper operation of the pumping system, as-well-as the safety of plant personnel. All piping and tubing shall be sealed for leaks.

C. Any evidence of improper installation shall be corrected by the Contractor. Care during storage, installation and startup shall be in strict accordance with manufacturer's recommendations.

3.3 MANUFACTURER'S SERVICES

A. The Contractor shall require the manufacturer to furnish the services of a qualified field engineer to perform the following functions in the designed periods of time. These services are to be performed at the jobsite.
   1. Check-out of installation, start-up of equipment and initial operator instruction. This service shall take place after all mechanical equipment associated with the control system is installed and mechanically operable.
   2. After equipment is fully operational, and before Owner will assume responsibility for the operation of the equipment, the equipment manufacturer's representative shall instruct the Owner's operating personnel in the care, maintenance and proper operation of the equipment.

B. Field Test
   1. Prior to equipment startup, all equipment described herein shall be inspected for quiet operation, proper connections, and satisfactory performance by means of a functional test.
   2. The pump and motor assembly shall be field tested to verify vibration is not in excess of the limits stated in the latest revision of Hydraulic Institute and NEMA MG 1.
   3. The pump, motor, and controls shall be given an operational test in accordance with the standards of the Hydraulic Institute. Recordings of the test shall substantiate the correct performance of the equipment at the design head, capacity, speed and horsepower as specified herein.
   4. Units apparently failing to meet the Specifications to the satisfaction of the Engineer must be more accurately tested in accordance with Hydraulic Institute Standards. If the pump fails the second test, the unit will be rejected, and the Contractor shall furnish a unit that will perform as specified.

C. Operation and Maintenance Materials
   1. The pump manufacturer shall be responsible for supplying written instruction, which shall be sufficiently comprehensive to enable the operator to operate and maintain the pump and all equipment supplied by the manufacturer. Instructions shall assume that the operator is familiar with pumps, motors, piping, valves, and controls, but that he has not previously operated and/or maintained the exact equipment supplied.
   2. The instruction shall be prepared as a system manual applicable solely to the pump and equipment supplied by the manufacturer to these specifications, and shall include those devices and equipment supplied by him.
   3. Operation and maintenance instruction shall be specific to the equipment supplied in accordance with these specifications. Instruction manuals applicable to many different configurations and pumps, and which require the operator to selectively read portions of the instructions shall not be acceptable.
   4. All costs for the above manufacturer functions including travel, lodging, meals, and incidentals shall be considered to have been included in the Contractor's lump sum bid price.

END OF SECTION

SECTION 46_05_09

PROCESS EQUIPMENT IDENTIFICATION

PART 1 GENERAL

1.1 SUMMARY

A. Devices used to identify process equipment including tags, nameplates, stencils, pipe markers, labels and lockout devices.

1.2 RELATED SECTIONS

A. Section 01_00_01 Basic Requirements

B. Section 01_33_01 General Submittal Requirements

C. The Contract Documents are a complete unit and complementary to each other. The individual Specification sections and other Contract Documents do not contain all cross references to "related work" or "related sections." It is the Contractor's responsibility to review the complete Contract Documents in order to properly scope, schedule and coordinate the work of any/all subcontractors, suppliers, and others on this project. Anything called out in one location of the Contract Documents is binding as if it were called out in all sections of the Contract Documents.

1.3 SUBMITTALS

A. Submittals for products and miscellaneous items in this specification section shall be submitted in accordance with Section 01_33_01 General Submittal Requirements and related submittal sections and provisions of the Contract Documents.

1.4 REFERENCES

A. The Contractor and/or Manufacturer shall follow the standards listed below, except as otherwise specified herein. The latest revision or edition in effect at the time of bid opening shall be utilized.

B. Referenced Standards:
   1. American Society of Mechanical Engineers (ASME):
      a. A13.1, Scheme for the Identification of Piping Systems.
      b. Instrumentation, Systems, and Automation Society (ISA).
   2. National Electrical Manufacturers Association/American National Standards Institute (NEMA/ANSI):
      a. Z535.1, Safety Color Code.
      b. Z535.2, Environmental and Facility Safety Signs.
      c. Z535.3, Criteria for Safety Symbols.
      d. Z535.4, Product Safety Signs and Labels.
   3. National Fire Protection Association (NFPA):
      a. 70, National Electrical Code (NEC).
   4. Occupational Safety and Health Administration (OSHA):

a. 29 CFR 1910.145, Specification for Accident Prevention Signs and Tags.

1.5 QUALITY ASSURANCE

A. Piping and equipment color scheme and lettering size: comply with ASME A13.1

1.6 MAINTENANCE/SPARE PARTS

A. Extra stock materials: furnish two containers of spray-on adhesive.

B. Tools: Furnish special crimpers and other devices required for Owner to reinstall tags.

PART 2 PRODUCTS

2.1 MATERIALS

A. Subject to compliance with the Contract Documents, the following manufacturers are acceptable:
1. W.H. Brady Co.
2. Panduit.
3. Seton.
4. National Band and Tag Co.
5. Carlton Industries, Inc.

B. Type Al - Round Metal Tags:
1. Materials:
a. Aluminum or stainless steel.
b. Stainless steel shall be used in corrosive environments.
2. Size:
a. Diameter: 1-1/2 IN minimum.
b. Thickness: 0.035 IN (20 GA) minimum.
3. Fabrication:
a. 3/16 IN minimum mounting hole.
b. Legend: Stamped and filled with black coloring.
4. Color: Natural.

C. Type A2 - Rectangle Metal Tags:
1. Materials: Stainless steel.
2. Size:
a. 3-1/2 IN x 1-1/2 IN minimum.
b. Thickness: 0.036 IN (20 GA) minimum.
3. Fabrication:
a. 3/16 IN minimum mounting hole.
b. Legend: Stamped and filled with black coloring.
4. Color: Natural.

D. Type A3 - Metal Tape Tags:
1. Materials: Aluminum or stainless steel.
2. Size:

a. Width 1/2 IN minimum.
b. Length as required by text.

3. Fabrication:
   a. 3/16 IN minimum mounting hole.
   b. Legend: Embossed.
4. Color: Natural.

E. Type B1- Square Nonmetallic Tags:
1. Materials: Fiberglass reinforced plastic.
2. Size:
   a. Surface: 2 x 2 IN minimum.
   b. Thickness: l00 mils.
3. Fabrication:
   a. 3/16 IN mounting hole with metal eyelet.
   b. Legend: Preprinted and permanently embedded and fade resistant.
4. Color:
   a. Background: Manufacturer standard or as specified.
   b. Lettering: Black.

F. Type B2 - Nonmetallic Signs:
1. Materials: Fiberglass reinforced or durable plastic.
2. Size:
   a. Surface: As required by text.
   b. Thickness: 60 mils minimum.
3. Fabrication:
   a. Rounded corners.
   b. Drilled holes in corners with grommets.
   c. Legend: Preprinted, permanently embedded and fade resistant for a 10 year minimum outdoor durability.
4. Color:
   a. Background: Manufacturer standard or as specified.
   b. Lettering: Black.
5. Standards for OSHA signs: NEMA/ANSI Z535.1, NEMA/ANSI Z535.2, NEMA/ANSI Z535.3, NEMA/ANSI Z535.4, OSHA 29 CFR 1910.145.

G. Type C - Phenolic Name Plates:
1. Materials: Phenolic.
2. Size:
   a. Surface: As required by text.
   b. Thickness: 1/16 IN.
3. Fabrication:
   a. Two (2) layers laminated.
   b. Legend: Engraved through top lamination into bottom lamination.
   c. Two (2) drilled side holes, for screw mounting.
4. Color: Black top surface, white core, unless otherwise indicated.

H. Type D - Self-Adhesive Tape Tags and Signs:
1. Materials: Vinyl tape or vinyl cloth.
2. Size:
   a. Surface: As required by text.
   b. Thickness: 5 mils minimum.

3. Fabrication:
    a. Indoor/Outdoor grade.
    b. Weather and UV resistant inks.
    c. Permanent adhesive.
    d. Legend: Preprinted.
    e. Wire markers to be self-laminating.
4. Color: White with black lettering or as specified.
5. Standards for OSHA signs: NEMA/ANSI Z535.1, NEMA/ANSI Z535.2, NEMA/ANSI Z535.3, NEMA/ANSI Z535.4, OSHA 29 CFR 1910.145.

I. Type E - Heat Shrinkable Tape Tags:
1. Materials: Polyolefin.
2. Size: As required by text.
3. Fabrication:
    a. Legend: Preprinted.
    b. Color: White background, black printing.

J. Type F - Underground Warning Tape:
1. Materials: Polyethylene.
2. Size:
    a. 6 IN wide (minimum).
    b. Thickness: 4 mils.
3. Fabrication:
    a. Legend: Preprinted and permanently imbedded.
    b. Message continuous printed.
    c. Tensile strength: 1750 psi.
4. Color: As specified.

K. Type G - Stenciling System:
1. Materials:
    a. Exterior type stenciling enamel.
    b. Either brushing grade or pressurized spray can form and grade.
2. Size: As required.
3. Fabrication:
    a. Legend: As required.
4. Color: Black or white for best contrast.

L. Underground Tracer Wire:
1. Materials:
    a. Wire:
        1) 12 GA AWG.
        2) Solid.
    b. Wire nuts: Waterproof type.
    c. Split bolts: Brass.

M. Valve lockout devices
1. Materials
    a. Nylon or Plastic
    b. Furnish device to restrict access to valve operator and to accept lock shackle.

N. Accessories
1. Fasteners:
a. Bead chain: #6 brass, aluminum or stainless steel.
b. Plastic strap: Nylon, urethane or polypropylene.
c. Screws: Self-tapping, stainless steel.
d. Adhesive, solvent activated.

O. Maintenance Materials
1. Where stenciled markers are provided, clean and retain stencils after completion and include in extra stock, along with required stock of paints and applicators.

PART 3 EXECUTION

3.1 INSTALLATION

A. Install identification devices at specified locations.

B. All identification devices to be printed by mechanical process, hand printing is not acceptable.

C. Attach tags to equipment with sufficient surface or body area with solvent activated adhesive applied to back of each tag.

D. Attach tags with 1/8" round or flat head screws to equipment without sufficient surface or body area, or porous surfaces.
1. Where attachment with screws should not or cannot penetrate substrate, attach with plastic strap.

E. Single items of equipment enclosed in a housing or compartment to be tagged on outside of housing.
1. Several items of equipment mounted in housing to be individually tagged inside the compartment.

F. Tracer Wire:
1. Attach to pipe at a maximum of 10 FT intervals with tape or tie-wraps.
2. Continuous pass from each valve box and above grade at each structure.
3. Coil enough wire at each valve box to extend wire a foot above the ground surface.
4. 1,000 FT maximum spacing between valve boxes.
5. If split bolts are used for splicing, wrap with electrical tape.
6. If wire nuts are used for splicing, knot wire at each splice point leaving 6 IN of wire for splicing.
7. Use continuous strand of wire between valve box where possible.
8. Continuous length shall be no shorter than 100 FT.

G. Schedules
1. Process Systems:
a. General:
1) Provide arrows and markers on piping.
a) At 20 FT maximum centers along continuous lines.
b) At changes in direction (route) or obstructions.

c) At valves, risers, "T" joints, machinery or equipment.
d) Where pipes pass through floors, walls, ceilings, cladding assemblies and like obstructions provide markers on both sides.

2) Position markers on both sides of pipe with arrow markers pointing in flow direction.
a) If flow is in both directions use double headed arrow markers.

3) Apply tapes and stenciling in uniform manner parallel to piping.

b. Piping: See Painting and Coatings Specifciations for process pipe color and type.

c. Trenches with piping:
1) Tag type: Type F - Underground Warning Tape
2) Location: Halfway between top of piping and finished grade.
3) Letter height: 1-1/4 IN minimum.
4) Natural gas or digester gas:
a) Color: Yellow with black letters.
b) Legend:
(1) First line: "CAUTION CAUTION CAUTION"
(2) Second line: "BURIED GAS LINE BELOW"
5) Nonpotable water piping, except 3 IN and smaller irrigation pipe:
a) Color: Green with black letters.
b) Legend:
(1) First line: "CAUTION CAUTION CAUTION"
(2) Second line: "BURIED NONPOTABLE WATER LINE BELOW"
6) Other piping (e.g., compressed air, irrigation, refrigerant, heating water, etc.):
a) Color: Yellow with black letters.
b) Legend:
(1) First line: "CAUTION CAUTION CAUTION"
(2) Second line: "BURIED PIPE LINE BELOW"

d. Yard valves, buried, with valve box and concrete pad:
1) Tag type: Type A2 - Rectangle Metal Tags as outlined in Detail Sheets.
2) Fastener: 3/l6 IN x 7/8 IN plastic screw anchor with 1 IN #6 stainless steel pan head screw.
3) Legend:
a) Letter height: 1/4 IN minimum.
b) Valve designation as indicated on the Drawings (e.g., "V-xxx").

e. Valves and slide gates:
1) Tag type:
a) Outdoor locations: Type B1 - Square Nonmetallic Tags.
b) Indoor noncorrosive:
(1) Type A1- Round Metal Tags.
(2) Type B1 - Square Nonmetallic Tags.
c) Indoor corrosive:
(1) Stainless steel Type A1 - Round Metal Tags.
(2) Type B1 - Square Nonmetallic Tags.
2) Fastener:

a) Type A1: Chain of the same material.
b) Type B1: Stainless steel chain.

3) Color: Per ASME A13.1 corresponding to the piping system.
4) Legend:
a) Letter height: 1/4 IN minimum.
b) Valve designation as indicated on the Drawings (e.g., "V-xxx").

f. Process equipment (e.g., pumps, pump motors, blowers, air compressors, bar screens, clarifier drive mechanism, etc.):
1) Tag type:
a) Type B2 - Nonmetallic Signs.
b) Type D - Self-Adhesive Tape Tags and Signs.
c) Type G - Stenciling System.
2) Fastener:
a) Self.
b) Screws.
c) Adhesive.
3) Legend:
a) Letter height: 1/2 IN minimum.
b) Equipment designation as indicated on the Drawings (e.g., "Primary Sludge Pump P-xxx").

g. Piping systems:
1) Tag type:
a) Outdoor locations: Type G - Stenciling System.
b) Indoor locations:
(1) Type D - Self-Adhesive Tape Tags and Signs.
(2) Type G - Stenciling System.
2) Fastener: Self.
3) Color: Per ASME A13.1.
4) Legend:
a) Letter height: Manufacturers standard for the pipe diameter.
b) Mark piping in accordance with ASME A13.1.
c) Use piping designation as indicated on the Drawings.
d) Arrow: Single arrow.

h. Process tanks (over 1000 GAL) and basins, (e.g., chemical storage, clarifiers, trickling filters, digesters, etc):
1) Tag type:
a) Type B2 - Nonmetallic Signs.
b) Type G - Stenciling System.
2) Fastener:
a) Screw.
b) Self.
3) Location as directed by Owner.
4) Legend:
a) Letter height: 4 IN minimum.
b) Equipment designation as indicated on the Drawings (e.g., "Clarifier CL-xxx").

i. Equipment that starts automatically:
1) Tag type:
a) Type B2 - Nonmetallic Signs.

b) Type D - Self-Adhesive Tape Tags and Signs.

2) Fastener:
   a) Type B2 - Screw or adhesive.
   b) Type D - Self.
   c) Size: 5 IN x 7 IN
3) Location: Equipment name.
4) Legend:
   a) OSHA Warning Sign.
   b) Description of Warning: "THIS MACHINE STARTS AUTOMATICALLY".

2. Instrumentation Systems:
   a. Instrumentation Equipment (e.g., flow control valves, primary elements, etc.):
      1) Tag type:
         a) Outdoor locations: Type B1 - Square Nonmetallic Tags.
         b) Indoor noncorrosive:
            (1) Type A1 - Round Metal Tags.
            (2) Type B1 - Square Nonmetallic Tags.
         c) Indoor corrosive:
            (1) Stainless steel Type A1 - Round Metal Tags.
            (2) Type B1 - Square Nonmetallic Tags.
      2) Fastener:
         a) Type A1: Chain of the same material.
         b) Type B1: Stainless steel chain.
      3) Legend:
         a) Letter height: 1/4 IN minimum.
         b) Equipment ISA designation as indicated on the Drawings (e.g., "FIT-xxx").
   b. Enclosure for instrumentation and control equipment, (e.g., PLC control panels, etc.):
      1) Tag type: Type C - Phenolic Name Plates.
      2) Fastener: Screws.
      3) Legend:
         a) Letter height: 1/2 IN minimum.
         b) Equipment name (e.g., "PLC CONTROL PANEL PCP-xxx").
   c. Components inside equipment enclosure, (e.g., PLC's, control relays, contactors, and timers):
      1) Tag type: Type D - Self-Adhesive Tape Tags.
      2) Fastener: Self.
      3) Legend:
         a) Letter height: 3/16 IN minimum.
      4) Description or function of component (e.g., "PLC-xxx" or "CR-xxx").
   d. Through enclosure door mounted components (e.g., selector switches, controller digital displays, etc.):
      1) Tag type: Type C - Phenolic Name Plates.
      2) Fastener: Screws.
      3) Legend:
         a) Letter height: 1/4 IN minimum.
         b) Component ISA tag number as indicated on the Drawings (e.g., "HS-xxx").

3. HVAC Systems:
   a. General:
      1) Provide arrows and markers on ducts.
         a) At 20 FT maximum centers along continuous lines.
         b) At changes in direction (route) or obstructions.
         c) At dampers, risers, branches, machinery or equipment.
         d) Where ducts pass through floors, walls, ceilings, cladding assemblies and like obstructions provide markers on both sides.
      2) Position markers on both sides of duct with arrow markers pointing in flow direction.
         a) If flow is in both directions use double headed arrow markers.
      3) Apply tapes and stenciling in uniform manner parallel to ducts.
   b. HVAC Equipment (e.g., unit heaters, exhaust fans, air handlers, etc.):
      1) Tag type:
         a) Type B2 - Nonmetallic Signs.
         b) Type C - Phenolic Name Plates.
      2) Fastener: Screws.
      3) Legend:
         a) Letter height: 1 IN minimum.
         b) Equipment designation as indicated on the Drawings (e.g., "EF- xxx").
   c. Ductwork:
      1) Tag type:
         a) Type D - Self-Adhesive Tape Tags and Signs.
         b) Type G - Stenciling System.
      2) Fastener: Self.
      3) Legend:
         a) Letter height: 1 IN minimum.
         b) Description of ductwork, (e.g., "AIR SUPPLY").
         c) Arrows: Single arrow.
   d. Enclosure for instrumentation and control equipment, (e.g., fan control panels, etc.):
      1) Tag type: Type C - Phenolic Name Plates.
      2) Fastener: Screws.
      3) Legend:
         a) Letter height: 1/2 IN minimum.
         b) Equipment designation as indicated on the Drawings (e.g., "FAN CONTROL PANEL FCP-xxx").
   e. Wall mounted thermostats:
      1) Tag type: Type D - Self-Adhesive Tape Tags and Signs.
      2) Fastener: Self.
      3) Legend:
         a) Letter height: 3/16 IN minimum.
         b) Description of equipment controlled (e.g., "UH-xxx" or AHU-xxx").
   f. Components inside equipment enclosure, (e.g., controller's, control relays, contactors, and timers):
      1) Tag type: Type D - Self-Adhesive Tape Tags and Signs.
      2) Fastener: Self.

3) Legend:

g. Letter height: 3/16 IN minimum.

1) Description or function of component (e.g., "CR-xxx").

2) Through enclosure door mounted equipment (e.g., selector switches, controller digital displays, etc.):

3) Tag type: Type C - Phenolic Name Plates.

a) Fastener: Screws.

b) Legend:

(1) Letter height: 1/4 IN minimum.

(2) Component tag number as indicated on the Drawings or as defined by contractor (e.g., "HS-xxx").

4. Electrical Systems:

a. Trenches with ductbanks, direct-buried conduit, or direct-buried wire and cable.

1) Tag type: Type F - Underground Warning Tape.

2) Letter height: 1-1/4 IN minimum.

3) Location:

a) Where trench is 12 IN or more below finished grade: In trench 6 IN below finished grade.

b) Where trench is less than 12 IN below finished grade: In trench 3 IN below finished grade.

4) Electrical power (e.g., low and medium voltage):

a) Color: Red with black letters.

b) Legend:

(1) First line: "CAUTION CAUTION CAUTION".

(2) Second line: "BURIED ELECTRIC LINE BELOW".

5) Communications (e.g., telephone, instrumentation, LAN, SCADA):

a) Color: Orange with black letters.

b) Legend:

(1) First line: "CAUTION CAUTION CAUTION".

(2) Second line: "BURIED COMMUNICATION LINE BELOW".

b. Switchgear, switchboards and motor control centers:

1) Tag type: Type C - Phenolic Name Plates.

2) Fastener: Screws.

3) Main equipment legend:

a) Letter height:

(1) First line: 1 IN minimum.

(2) Subsequent lines: 3/8 IN minimum.

b) First line: Equipment name (e.g., "MAIN SWITCHBOARD MSBxxx").

c) Second line:

(1) Source of power (e.g., "FED FROM MCCxxx LOCATED IN ROOM xxx").

(2) The source of power room number is only required when there are multiple electrical rooms, if the source is in another building, the building name or number shall be used.

d) Third line: System voltage and phase (e.g., "480/277 V, 3PH").

4) Main and feeder device legend:
   a) Letter height: 3/8 IN minimum.
   b) Description of load (e.g., "MAIN DISCONNECT", "PUMP Pxxx" or "PANELBOARD HPxxx").

c. Panelboards and transformers:
1) Tag type: Type C - Phenolic Name Plates.
2) Fastener: Screws.
3) Legend:
   a) Letter height:
      (1) First line: 3/8 IN minimum.
      (2) Subsequent lines: 3/16 IN minimum.
   b) First line: Equipment name (e.g., "PANELBOARD Pxxx" or "TRANSFORMER Txxx").
   c) Second line (panelboards only): System voltage and phase (e.g., "208/120V, 3PH").

d. Transfer switches:
1) Tag type: Type C - Phenolic Name Plates.
2) Fastener: Screws.
3) Legend:
   a) Letter height:
      (1) First line: 3/8 IN minimum.
      (2) Subsequent lines: 3/16 IN minimum.
   b) First line: Equipment name (e.g., "AUTOMATIC TRANSFER SWITCH ATSxxx").

e. Safety switches, separately mounted circuit breakers and motor starters, VFD's, etc.:
1) Tag type: Type C - Phenolic Name Plates.
2) Fastener: Screws.
3) Legend:
   a) Letter height: 1/4 IN minimum.
      (1) First line: Description of load equipment is connected to (e.g., "PUMP Pxxx").

f. Enclosure for instrumentation and control equipment, (e.g., lighting control panels, etc.):
1) Tag type: Type C - Phenolic Name Plates.
2) Fastener: Screws.
3) Legend:
   a) Letter height: 1/2 IN minimum.
   b) Equipment name (e.g., "LIGHTING CONTROL PANEL LCPxxx").

g. Components inside equipment enclosures (e.g., circuit breakers, fuses, control power transformers, control relays, contactors, timers, etc.):
1) Tag type: Type D - Self-Adhesive Tape Tags and Signs.
2) Fastener: Self.
3) Legend:
   a) Letter height: 3/16 IN minimum.
   b) Description or function of component (e.g., "M-xxx", "CR-xxx" or "TR-xxx").

h. Through enclosure door mounted equipment (e.g., selector switches, controller digital displays, etc.):
1) Tag type: Type C - Phenolic Name Plates.

2) Fastener: Screws.
3) Legend:
    a) Letter height: 1/4 IN minimum.
    b) Component tag number as indicated on the Drawings or as defined by contractor (e.g., "HS-xxx").

i. Conductors in control panels and in pull or junction boxes where multiple circuits exist.
1) Tag type: Type D - Self-Adhesive Tape Tags.
2) Fastener: Self.
3) Tag conductor at both ends.
4) Legend:
    a) Letter height: 1/8 IN minimum.
    b) Circuit number or wire number as scheduled on the Drawings or as furnished with the equipment.

j. Conductors in handholes and manholes.
1) Tag type: Type A3 - Metal Tape Tags.
2) Fastener: Nylon strap.
3) Tag conductor at both ends.
4) Legend:
    a) Letter height: 1/8 IN minimum.
    b) Circuit number or wire number as scheduled on the Drawings.

k. Grounding conductors associated with grounding electrode system in accordance with the following:
1) Tag type: Type D - Self-Adhesive Tape Tags.
2) Fastener: Self.
3) Legend:
    a) Letter height: 1/8 IN minimum.
    b) Function of conductor (e.g., "MAIN BONDING JUMPER", "TO GROUND RING", "TO MAIN WATER PIPE").

l. Flash protection for switchboards, panelboards, industrial control panels and motor control centers:
1) Tag type: Type D - Self-Adhesive Tape Signs.
2) Fastener: Self.
3) Legend: Per NFPA 70.

m. Entrances to electrical rooms:
1) Tag type: Type B2 - Nonmetallic Signs.
2) Fastener: Screw or adhesive.
3) Size: 5 IN x 7 IN.
4) Location: Each door to room.
5) Legend:
    a) OSHA Danger Sign.
    b) Description of Danger: "HIGH VOLTAGE, AUTHORIZED PERSONNEL ONLY".

n. Equipment where more than one (1) voltage source is present:
1) Tag type:
    a) Type B2 - Nonmetallic Signs.
    b) Type D - Self-Adhesive Tape Signs.
2) Fastener:
    a) Screw or adhesive.
    b) Self.

3) Size: 1-3/4 IN x 2-1/2 IN.
4) Location: Exterior face of enclosure or cubical.
5) Legend:
   a) OSHA Danger Sign.
   b) Description of Danger: "MULTIPLE VOLTAGE SOURCES".

END OF SECTION

THIS PAGE INTENTIONALLY LEFT BLANK FOR DOUBLE SIDED PRINTING

SECTION 46_05_05

EQUIPMENT GENERAL PROVISIONS

PART 1 GENERAL

1.1 SUMMARY

A. General provisions pertaining to all specified equipment.

B. The requirements of this section apply to all equipment specified.

C. If a conflict exists between this section and other individual equipment sections, the more stringent section governs.

D. The Contractor shall assume full responsibility for coordination of the entire project including verification that all structures, piping, coating system, and equipment components arc compatible. The Contractor shall initially operate each equipment system and shall make all necessary adjustments so that each system is placed in proper operating condition.

E. Without exception, the Contract Price shall include all royalties, payments, technology fees arising from patents, licenses, or proprietary designs or processes associated with furnishing the equipment.

1.2 RELATED SECTIONS

A. Section 01_00_01 Basic Requirements

B. Section 01_33_01 General Submittal Requirements

C. Section 01_33_02 Pre-bid Equipment Submittal Requirements

D. The Contract Documents are a complete unit and complementary to each other. The individual Specification sections and other Contract Documents do not contain all cross references to "related work" or "related sections." It is the Contractor's responsibility to review the complete Contract Documents in order to properly scope, schedule and coordinate the work of any/all subcontractors, suppliers, and others on this project. Anything called out in one location of the Contract Documents is binding as if it were called out in all sections of the Contract Documents.

1.3 SUBMITTALS

A. Submittals for products and miscellaneous items in this specification section shall be submitted in accordance with Section 01_33_01 General Submittal Requirements and related submittal sections and provisions of the Contract Documents.

B. Drawings showing general dimensions and conforming the size of equipment, drives and specified appurtenances, piping connections and construction details of equipment.

C. Assembly and installation drawings including shaft size, seal, coupling, bearings, anchor bolt plan, part nomenclature, part list with materials of construction by ASTM reference and grade, outline dimensions, and shipping weights.

D. Manufacturer's installation instructions.

E. Complete electrical schematic diagrams.

F. Submit operation and maintenance manual in accordance with Section 01_78_23 – Operation and Maintenance Data.

1.4 QUALITY ASSURANCE

A. Unless approved by Engineer, all equipment furnished shall have a record of at least 10 years of successful, trouble-free operation in similar applications, from the same Manufacturer. This requirement does not apply to equipment specifically named in the individual specification sections or by addendum.

B. Inspection, Startup, and Field Adjustment: The Contractor shall demonstrate that all equipment meets the specified performance requirements. Contractor shall provide the services of an experienced, competent, and authorized service representative of the Manufacturer of each item of major equipment who shall visit the site of Work to perform the following tasks:
   1. Assist the Contractor in the installation of the equipment.
   2. To inspect, check, adjust if necessary and approve the equipment installation.
   3. To start-up and field-test the equipment for proper operation, efficiency, and capacity.
   4. To perform necessary field adjustments during the test period until the equipment installation and operation are satisfactory to the Engineer.
   5. Where required by the individual equipment sections, an authorized training representative of the manufacturer shall visit the Site for the number of days indicated in those sections to instruct the Owner's personnel in the operation and maintenance of the equipment.
   6. The costs of all inspection, startup, testing, adjustment, and instruction Work performed by factory-trained representatives at the site shall be borne by the Contractor.

C. System Design & Arrangement
   1. The equipment, sizes, materials, and arrangements described are based on recommendations by equipment manufacturers and the named equipment in the individual specification sections and shall be considered minimum limits of acceptability. The equipment manufacturer shall be responsible for design, arrangements, and performance of all equipment supplied. Arrangements or equipment other than those shown on the Drawings shall be subject to the Engineer's approval.
   2. Modifications to structural design due to a change of equipment manufacturer, manufacturer's varying space requirements, foundation requirements, floor slope requirements, or dimension changes to fit manufacturer specific requirements shall be coordinated by the Contractor and included in the Bid and shall be at no additional cost to the Owner.

3. The Contractor shall be responsible for any modifications to the piping, electrical, structural, and mechanical layouts, as well as reimbursement to the Owner for additional charges by the Engineer for additional work required for the changes.

1.5 DELIVERY, HANDLING AND STORAGE

A. The equipment manufacturer shall provide unloading, storage, and handling instructions to the Contractor prior to shipment.

B. Equipment delivered onsite without an accepted submittal will not be allowed to be unloaded.

C. Equipment shall be boxed, crated, or otherwise protected from damage and moisture during shipment, handling, and storage. Equipment shall be protected from exposure to corrosive fumes and shall be kept thoroughly dry at all times. Pumps, motors, drives, electrical equipment, and other equipment with anti-friction or sleeve bearings shall be stored in weather tight storage facilities prior to installation. For extended storage periods, plastic equipment wrappers shall not be used to prevent accumulation of condensate in gears and bearings.

D. All equipment shall be delivered to the Contractor in good, sound condition, and free from damage. Equipment which has been damaged will be rejected.

E. The Contractor shall be responsible for proper unloading, handling, and storage of all equipment in accordance with the Manufacturer's instructions. Products shall be carefully stored in a manner that will prevent damage and in an area that is protected from the elements. Any equipment stored for longer than 30 days shall be inspected by the Manufacturer’s representative prior to installation. Contractor shall replace equipment that has been damaged as a result of storage not in accordance with Manufacturer’s instructions.

1.6 MAINTENANCE/SPARE PARTS

A. Tools: The Contractor shall supply one complete set of special wrenches and other special tools necessary for the assembly, adjustment, and dismantling of the equipment. The set of tools shall be neatly mounted in a labeled tool box of suitable design provided with a lockable hinged cover.

B. Spare Parts: All equipment shall be furnished with the manufacturer’s recommended spare parts as indicated in the individual equipment Sections. Spare parts subject to deterioration such as ferrous metal items and electrical components shall be properly protected by lubricants or desiccants and encapsulated in hermetically sealed plastic wrapping. Spare parts with individual weights less than 50 pounds and dimensions less than 2 feet wide, or 18 inches high, or 3 feet in length shall be stored in a wooden box with hinged wooden cover and locking hasp. Hinge shall be strap type. The box shall be painted and identified with stenciled lettering stating the name of the equipment, equipment numbers, and word “spare parts”. A neatly typed inventory of spare parts shall be taped to the underside of the cover. All spare parts are intended for use by the Owner only, after expiration of the warranty period specified in the Contract Documents.

PART 2 PRODUCTS

2.1 LUBRICATION

A. Equipment shall be adequately lubricated by systems which require attention no more frequently than weekly during continuous operation. Lubrication systems shall not require attention during start-up or shut-down and shall not waste lubricants.

B. Lubricants of the type recommended by the equipment manufacturer shall be provided by the Supply Contractor in sufficient quantity for all consumption prior to completion of required testing and acceptance of equipment by the Owner.

C. All drives and gear reducers shall be fitted with weatherproof vent plugs, oil fill, and oil drain fittings, and oil level indicators as appropriate. Vent plugs and fittings shall be stainless steel, or other approved corrosion resistant material.

D. For all grease lubricated bearings provide grease lines and fittings routed to a safe and accessible location for ease of operator maintenance. Grease lines shall be rigidly mounted and neatly routed, and shall be copper or stainless steel. Plastic grease piping will not be allowed.

2.2 EQUIPMENT SUPPORTS AND FOUNDATIONS

A. Equipment Supports: All equipment supports, anchors, and restrainers shall be adequately designed for static, dynamic, wind, and seismic loads.
   1. Wall-mounted equipment weighing more than 250 pounds or which is within 18-inches above the floor shall be provided with fabricated steel supports. Pedestals shall be of welded steel. If the supported equipment is a panel or cabinet or is enclosed with removable sides, the pedestal shall match the supported equipment in appearance and dimensions.
   2. Seismic requirements: Freestanding and wall-hung equipment shall be anchored in place by methods that satisfy the building code. Calculations shall be performed and signed and stamped for equipment weighing more than 400 pounds. Calculations shall analyze lateral and overturning forces and meet all applicable building code requirements. Calculations shall include the distribution of forces imposed on the supporting structure and anchors, verifying that each anchor can develop the required resistance forces.
   3. Wind requirements: Exterior freestanding equipment shall be anchored in place by methods that satisfy the building code. Calculations shall be performed and signed and stamped, analyzing lateral and overturning forces and meet all applicable building code requirements. Calculations shall include the distribution of forces imposed on the supporting structure and anchors, verifying that each anchor can develop the required resistance forces.

B. Anchors: Anchor bolts shall be in accordance with Division 05 specifications and all Manufacturer's recommendations. In the event that requirements are conflicting, the more stringent requirements shall apply.

C. Equipment Foundations: Equipment foundations shall be as shown in the Drawings and in accordance with Manufacturer's written recommendations. In the event that requirements are conflicting, the more stringent requirements shall apply. All mechanical equipment,

tanks, control cabinets, etc., shall be supported as shown in the Drawings, unless otherwise specified.

2.3 COUPLINGS

A. Flexible couplings shall be provided between the driver and the driven equipment to accommodate slight angular misalignment, parallel misalignment, end float, and to cushion shock loads. Where required for vertical shafts, 3-piece spacer couplings or universal type couplings for extended shafts shall be installed. Unless otherwise indicated, or recommended by the equipment manufacturer, gear or flexible spring type coupling shall be furnished with horizontal and end suction pumps.

B. The equipment manufacturer shall recommend the size and type of coupling required to suit each specific application.

C. Taper-lock bushings may be used to provide for easy installation and removal on shafts of various diameters.

D. Where universal type couplings are shown, they shall be of the needle bearing type construction, equipped with commercial type grease fittings.

2.4 SHAFTING

A. General: All shafting shall be continuous between bearings and shall be sized to transmit the power required. Keyways shall be accurately cut in line. Shafting shall not be turned down at the ends to accommodate bearings or sprockets whose bore is less than the diameter of the shaft. Shafts shall rotate in the end bearings and shall be turned and polished, straight, and true.

B. Design Criteria: Shafts shall be designed to carry the steady state and transient loads suitable for unlimited number of load applications. Where shafts are subjected to fatigue stresses, such as frequent start and stop cycles, the mean stress shall be determined by using the modified Goodman Diagram. The maximum torsional stress shall not exceed the endurance limit of the shaft after application of the factor of safety of 2 in the endurance limit and the stress concentration factor of the fillets in the shaft and keyway. Stress concentration factor shall be in accordance with ASME Standard B17.1– Keys and Keyseats.

C. Materials: Shafting materials shall be appropriate for the type of service and torque transmitted. Environmental elements such as corrosive gases, moisture, and fluids shall be taken into consideration. Materials shall be as shown or specified unless furnished as part of an equipment assembly.
   1. Low carbon cold-rolled steel shafting shall conform to ASTM A 108, Grade 1018.
   2. Medium carbon cold-rolled shafting shall conform to ASTM A 108, Grade 1045.
   3. Corrosion-resistant shafting shall be stainless steel or Monel, whichever is most suitable for the intended service.

D. Differential Settlement: Where differential settlement between the driver and the driven equipment may occur, an extension shaft with two sets of universal type couplings shall be provided.

2.5 DRIVE GUARDS

A. Power transmission, prime movers, machines, shaft extensions, and moving machine parts shall be guarded in accordance with the OSHA Safety and Health Standards (29CFR1910.211 to 1910.219). The guards shall be constructed of minimum 10 gauge stainless steel or aluminum with smooth edges and corners and securely fastened. Where required for lubrication or maintenance, guards shall have hinged and latched access doors.

2.6 FLEXIBLE CONNECTORS

A. Flexible connectors shall be installed in all piping connections to engines, blowers, compressors, and other vibrating equipment with the requirements of the ANSI B31.1.

2.7 GASKETS AND PACKINGS

A. Packing around valve stems and reciprocating shafts shall be of compressible material, compatible with the fluid being used. Chevron-type "V" packing shall be Garlock No. 432, or John Crane "Everseal".

B. Packing around rotating shafts (other than valve stems) shall be "O"-rings, stuffing boxes, or mechanical seals, as recommended by the Manufacturer and acceptable to the Owner's Representative.

2.8 NAMEPLATES

A. Equipment nameplates of stainless steel shall be engraved or stamped and fastened to the equipment in an accessible location with No. 4 or larger oval head stainless steel screws or drive pins. Adhesives shall not be used in lieu of stainless steel screws. Nameplates shall contain the Manufacturer's name, model, serial number, size, characteristics, date of manufacture, and appropriate data describing the machine performance ratings. Manufacturer to provide equipment tag number.

2.9 SAFETY REQUIREMENTS

A. Where Work areas are located within a flammable or toxic gas environment, suitable gas detection, ventilating, and oxygen deficiency equipment shall be provided. Workers shall be equipped with approved breathing apparatus.

PART 3 EXECUTION

3.1 INSTALLATION

A. General: Equipment shall be installed in accordance with the manufacturer's written recommendations and the requirements of the individual equipment specification sections.

B. Field Assembly: Studs, cap screws, bolt and nuts used in field assembly shall be coated with Never Seize compound.

C. Insulating Connections: All insulating connections shall be installed in accordance with the Manufacturer's printed instructions.

D. Pipe Hangers, Supports, and Guides: Hangers, supports, and guides shall be spaced in accordance with Section 40_05_07.03 – Pipe Supports, as shown on the drawings and ANSI/ASME B.31.1 standard.

E. Packaged Equipment
1. When any system is furnished as pre-packaged equipment, the Contractor shall coordinate space and structural requirements, clearances, utility connections, signals, and outputs with Subcontractors to avoid later change orders.
2. If the packaged system has any additional features (as safety interlocks, etc.) other than required by the Contract Documents, the Contractor shall coordinate such features with the Owner's Representative and provide material and labor necessary for a complete installation as required by the manufacturer.

3.2 FIELD TESTS

A. Where indicated by the individual equipment sections, equipment shall be field tested after installation to demonstrate satisfactory operation without excessive noise, vibration, or overheating of bearings or motor.

B. At the very minimum, the following field testing shall be conducted:
1. Start equipment, check, and operate the equipment over its entire operating range. Vibration level shall be within the amplitude limits as indicated or as recommended by the reference applicable standards.
2. Obtain concurrent readings of motor voltage, amperage, capacity, vibration, and bearing temperatures.
3. Operate equipment indicated in Section 01650 – Testing, Adjusting, Balancing, Demonstration, and Startup of Systems.

C. The Owner's Representative will witness field-testing. The Contractor shall notify the Owner's Representative of the test schedule 3 Days in advance.

D. In the event that any equipment fails to meet the test requirements, the equipment shall be modified/replaced and retested until it satisfies the requirement.

END OF SECTION

THIS PAGE INTENTIONALLY LEFT BLANK FOR DOUBLE SIDED PRINTING

SECTION 46_07_54

WASTE ACTIVATED SLUDGE PUMP STATION

PART 1 GENERAL

1.1 SUMMARY

A. This specification section covers the work necessary to furnish all labor, materials equipment and incidentals required to provide one (1) above ground fiberglass pump station with duplex self-priming pumps and automatic control system complete and operational with all appurtenances as specified herein and/or as shown on the plans for pumping domestic sewage. The principal items of equipment shall include two self-priming, horizontal, centrifugal, v-belt motor driven sewage pumps, valves, internal piping, motor control center with thermal magnetic circuit breakers, magnetic motor starters, automatic control system, internal wiring, fiberglass reinforced polyester resin enclosure equipped with ventilating blower, and thermostatically controlled electric heater. The pumps, fiberglass pump stations, and controls shall be manufactured by Gorman Rupp Pump Company, as provided by Haynes Equipment Company, LLC.

B. Provide the following:
   1. Northside WWTP
      a. 1 Duplex unit w/ Fiberglass Enclosure
         1) Gorman Rupp T6A3S-B SUPER T Series
         2) Self-priming centrifugal solids handling
         3) 600 gpm @ 9′ (3′ minimum)

C. A single coordinating supplier will be responsible for furnishing and coordinating the pump stations. The coordinating supplier shall be a manufacturer or supplier who is regularly engaged in the business of pumping systems. The coordinating supplier will prepare detailed drawings of equipment structure and equipment information, and other data required for complete system description. The manufacturer will verify each system component is compatible with all other components of the system, all pipe materials and sizes are appropriate and all devices necessary for a proper functioning system have been provided. System supplier will furnish all equipment as a complete, integrated package, with a single responsibility for proper function of related equipment including fiberglass enclosure, pumps, valves, and controls.

D. All listed iron and steel products used in this project must be produced in the United States. The term "iron and steel products" means the following products made primarily of iron or steel: lined or unlined pipes and fittings, manhole covers and other municipal castings, hydrants, tanks, flanges, pipe clamps and restraints, valves, structural steel, reinforced precast concrete, and construction materials. The deminimis and minor components waiver apply to this contract for minor components.

1.2 RELATED SECTIONS

A. Section 01_00_01 Basic Requirements

B. Section 01_33_01 General Submittal Requirements

C. Section 01_33_02 Pre-bid Equipment Submittal Requirements

D. The Contract Documents are a complete unit and complementary to each other. The individual Specification sections and other Contract Documents do not contain all cross references to "related work" or "related sections." It is the Contractor's responsibility to review the complete Contract Documents in order to properly scope, schedule and coordinate the work of any/all subcontractors, suppliers, and others on this project. Anything called out in one location of the Contract Documents is binding as if it were called out in all sections of the Contract Documents.

1.3 SUBMITTALS

A. Submittals for products and miscellaneous items in this specification section shall be submitted in accordance with Section 01_33_01 General Submittal Requirements and related submittal sections and provisions of the Contract Documents.

1.4 DELIVERY, STORAGE & HANDLING

A. Individual equipment components shall be crated in structurally adequate packing containers to prevent damage during shipping, facilitate ease of handling and to provide suitable protection from weather for extended storage at the jobsite prior to installation. Packing containers shall be permanently labeled with appropriate equipment identification, shipping address and return address. Packing list shall be provided with equipment at time of delivery.

B. Electrical equipment shall be kept thoroughly dry at all times and shall be stored indoors and protected from freezing conditions. Equipment storage shall be protected and maintained in accordance with the manufacturer's recommendations. Equipment shall not be stored directly on the ground.

C. Contractor shall utilize equipment and tools of adequate size suitable for unloading, transporting, storing and supporting the equipment during installation. Caution shall be employed to prevent equipment damage resulting from abrupt contact with other materials or equipment.

D. Weight of each complete collector, these weights to be verified by the Contractor with substantiating copy to the Engineer as the material is received on the job site.

1.5 WARRANTY

A. The manufacturer shall warrant the equipment to be of quality construction, free from defects in materials and workmanship. The warranty shall become effective upon acceptance of the project by the Owner (after completion of final inspection.)

B. The equipment, apparatus, and parts furnished shall be warranted from a period of one (1) year, excepting only those items that are normally consumed in service, such as oil, grease, gaskets, o-rings, etc. The manufacturer shall be solely responsible for the warranty of the equipment and all components.

C. Upon request from the Engineer and/or the Owner, the manufacturer shall demonstrate proof of financial responsibility with respect to performance and delivery date. In addition,

the manufacturer shall provide proof of evidence of facilities, equipment, and skills required to produce the equipment specified herein and provide technical service and replacement parts.

D. Components failing to perform as specified by the Engineer, or as represented by the manufacturer, or proven defective in service during the warranty period, shall be replaced, repaired, or satisfactorily modified by the manufacturer without cost of kind to the Owner.

E. It is not intended the manufacturer assume liability for consequential damages or contingent liabilities arising out of failure of any product or parts thereof to operate properly, however caused by or resulting from or arising out of defects in design or manufacture, delays in delivery, replacement, or otherwise.

PART 2 PRODUCTS

2.1 OPERATING CONDITIONS

A. Pumps
1. Each self-priming pump shall have the necessary characteristics and be selected to perform in accordance with, and subject to, the provisions of the paragraph hereafter titled pumps.

B. Power
1. Electrical power to be furnished to the site will be 3 phase, 60 hertz, 4 wire, 460 volts, maintained within plus or minus 10 percent. Control voltage shall not exceed 132 volts.

2.2 FRP LIFT STATION ENCLOSURE

A. Shelter Details
1. Size:
   a. Exterior Width: 8 ft
   b. Exterior Length: 14 ft
   c. Wall Height: 8 ft
2. Roof Slope: Sufficient to allow rain drainage, 12 – 17 pitch.
3. Roof Type: Roof shall be wind-resistant "hip" design sloping up from all four sides. Roof shall form a permanent weather-proof connection with a seamless exterior appearance that uses low-maintenance silicone caulk matching the shelter's exterior color.
4. Roof deck is compliant with ASTM E 108/ULC S107 (class C) with <13' Flame Spread.
5. Roof shall not overhang walls in order to maximize shelter's wind speed rating.

B. System: Design, furnish, and install complete package using manufacturer's standard components.

C. Structure Type: Fiberglass Reinforced Polymer (FRP) shelter on a formed and poured concrete pad as specified herein.

D. Submittals: Shelter vendor to provide one (1) digital version of shop drawings and manufacturer's data including the following:
   1. Dimensions, weight, materials, parts, devices, and all other information required to verify compliance with these Specifications.
   2. Manufacturer's Literature and Technical Data: Drawings and Specifications for proposed system.
   3. Drawings prepared specifically for this Project:
   4. Materials and Details: Show materials, details of components (including doors and other accessories), finishes, fastenings, methods of joining, sealants, anchor bolt details, structural members and bracing, and openings.
   5. Anchorage details of structure to foundation.

2.3 QUALITY ASSURANCE

A. Qualifications:
   1. Manufacturer:
      a. Longevity: At least 10 years' experience in work of the type required in this section.
      b. Capacity: Production throughput sufficient to provide work required for this Project without delay.
      c. Certified Test Results: The manufacturer shall have an entire fiberglass panel destructive tested by an accredited Testing Laboratory and Third Party Quality Control Agency and upon request shall furnish to the engineer the certified and stamped test results of the laboratory testing. The accredited Testing Laboratory must be accredited to ISO 17020 and 17025.
      d. Quality: The manufacturer shall maintain a quality assurance program that is reviewed and approved by a Third Party Quality Control Agency.

B. Material Properties:
   1. Fiberglass Laminate Properties:
      a. Tensile Strength (ASTM D 638) 16,000 (psi)
      b. Flexural Strength (ASTM D 790) 33,700 (psi)
      c. Flexural Modulus (ASTM D 790) 1,160,000 (psi)
      d. Tensile Modulus (ASTM D 638) 1,300,000 (psi)
      e. Barcol Hardness 45
      f. Izod Impact – Notched ((ft.-lbs)/in) 16.30
      g. Izod Impact – Unnotched ((ft.-lbs)/in) 21.79
   2. Foam shall be rigid closed cell, polyisocyanurate with a density of 1.5 – 1.9 pounds per cubic foot.
      a. Flame Spread (ASTM E 84) <75
      b. Smoke Development (ASTM E 84) <450

2.4 DELIVERY, STORAGE, AND HANDLING

A. The fiberglass shelter and the accessory items shall be carefully transported, stored, handled and set in place in a manner that will prevent distortion, misalignment or other damage to the units.

B. During storage prior to installation and following installation, but prior to placing in service, the manufacturer's recommendations regarding handling shall be followed.

2.5 SPECIAL MANUFACTURERS WARRANTY

A. Manufacturer shall provide a twenty-five (25) year warranty on the shelter materials and workmanship, according to the following specifications:
   1. The shelter will be free from manufacturing defects in workmanship and will not appreciably deteriorate under conditions of normal use and regular service and maintenance when installed properly, for a period of twenty-five (25) years from the original date of purchase.
   2. Component parts will be purchased from reputable manufacturers and carry their own warranties.
   3. Any shelter penetrations made by shelter manufacturer must be maintained by the Customer to ensure proper sealing. Suggested intervals is every (2) two years. All penetrations made by the Customer during shelter installation are the responsibility of the Customer and may void or limit the warranty if done improperly.
   4. All warranties are Null and Void if the shelter and/or its components are modified or damaged as a result of unauthorized repair, misuse, negligence, accident, or act of God. This warranty does not cover vandalism, unreasonable use, damage caused by flying or falling objects, collision with animals or vehicles, or damages caused by environmental extremes or natural disasters, such as earthquakes, floods, hail or lightning.

2.6 SHELTER MANUFACTURERS

A. Product from Shelter Works, St. Louis, MO as represented by Haynes Equipment (405-755-1357), meeting these Specifications, may be used on this Project.

B. Products from other manufacturers will be considered for substitution 14 days prior to bid. Requests for substitution will not be considered if received 13 or fewer days before bid. Requests for substitution must include the following information in order to be considered:
   1. Formal written request certifying that products to be substituted will match specified products in terms of structural properties, dimensions, physical appearance, quality level and quantities and that they will perform the same function in the same manner and will achieve the same end result.
   2. Manufacturer's and supplier's material data sheets, specifications and performance data.
   3. A list of fifty (50) projects in satisfactory service for not less than three years with shelters similar to those being proposed for substitution. For each project, include name, address and telephone number of the engineer, the contractor and the plant manager.

C. SYSTEM PERFORMANCE. Structural Loading:
   1. Shelter: Own dead load.
   2. Roof Live Load: 20 psf
   3. Wind Load: 90 mph per ASCE 7-10
   4. Seismic Load: Per local building code

2.7 COMPONENTS

A. U-BOLTS. Through-wall lifting/tie-down eyes at the top of each corner to facilitate handling.

B. WALLS. Each wall shall be one single monolithic piece with faux brick textured appearance. Panelized construction not acceptable because connections could fail and leak over time.

C. CONNECTIONS. Wall panels shall overlap to form a permanent weather-proof connection with a seamless exterior appearance that uses low-maintenance silicone caulk matching the shelter's exterior color. Internal connections shall use stainless steel hardware spaced no more than 12" on center.

D. EXTERIOR. All exterior surfaces shall have 18-20 mils of superior performance marine grade gel coat, incorporating ultra violet inhibitors. Exterior color shall be desert sand, polar white, meadow green, or storm gray.

E. INTERIOR. All interior surfaces shall be sprayed with 18-20 mils of Polycor 944 high quality isophthalic white gel coat finish offering the same characteristics as the exterior surfaces without ultra-violet inhibitors. Interior surface shall not contain any visible surface-mounted strut or other unsightly channel.

F. BASE FLANGE. Shelter shall have an FRP mounting flange around the entire interior perimeter, ¼" thick x minimum 2" wide. Pockets which reduce the wall's full insulation value shall not be accepted. ConSeal Bitumen/Butyl sealant shall be provided for a weather-proof connection below the shelter's base. Flange shall be pre-drilled with 7/16" diameter holes 24" on center.

G. ACCESS
1. Pedestrian doors shall be made of fiberglass reinforced polymer (FRP) using exclusive FiberWrap technology to eliminate the possibility of delamination during the shelter's entire lifespan.
2. Pedestrian doors shall be hung with stainless steel ball bearing type hinges equipped with tamper-resistant, non-removable pins. Hinges shall be oriented with no fasteners exposed when door is closed.
3. Pedestrian doors shall be sealed with a weather-tight EPDM gasket along the entire perimeter of the door.
4. Pedestrian doors shall have a 2.5" deep aluminum rain drip molding located above.
5. All pedestrian doors must be able to be set in 'open' position with no hands. Doors must be able to be removed from 'open' position and closed with no hands. Doors must have hydraulic closer to prevent wind damage to door.
6. (1) 6'-0" wide x 6'-8" high double door(s).
    a. Closure system is panic push bar, key-lockable.
    b. Threshold is ½" tall, low profile aluminum.

H. TERMINATION. Electrical terminations in NEMA 1 208Y/120V 3-phase load center with 200 amp main breaker. Includes two (2) spare/unused 3P 80A breakers and two (2) spare/unused 1P 20A breakers.

I. RECEPTACLES: (4) GFCI duplex each with weather-proof-when-not-in-use cover.
1.

J. WIRING
1. Schedule 40 PVC conduit installed around the interior perimeter of the shelter, along the top of the wall. All conduit and fittings shall be UL Listed.

2. Conduit and wiring shall be installed in accordance with the most recent National Electric Code (NEC).
3. Minimum 12 gauge shall be used for wiring in conduit.
4. Wiring shall not be loaded above 60º C temperature rating.

K. ILLUMINATION
1. Vapor-tight, fluorescent light fixture(s) providing at least 100 lumen/sf.
2. Interior lights to be operated by (1) 2-way switch with weatherproof cover.
3. (1) exterior 40 Watt LED flood light operated by photocell.

L. VENTILATION
1. (1) fan which shall be rated for at least 500 cubic feet per minute. Fan to be exhaust (blowing from inside out). Fan operation controlled by thermostat.
2. (1) gravity louver with insect screen and aperture size equal to or larger than the fan opening. Manual vents are not acceptable in order to avoid fan motor burnout which could occur if fan were energized when manual vents are closed.
3. Ventilation through-wall openings shall be protected from the elements with a weather-tight fiberglass hood the same color as the shelter itself.

M. HEAT. Thermostatically-controlled, 208 Volt, single--phase electric and at least 3 KW. Wall or ceiling mounted.

2.8 MATERIALS

A. Walls, roof and doors shall be seamless, one-piece panels laminated with 1/8" thick sprayed fiberglass outside surface, core material, and 1/8” thick sprayed fiberglass inside surface. Walls, roof and doors shall have continuous FiberBeam laminations (floor to ceiling and top-of-wall to ridge) every 12” to permanently bond inner FRP surface with outer FRP surface to provide structural integrity and prevent de-lamination of the fiberglass from the core material.

B. Walls and roof shall have minimum R-12 insulation with core consisting of minimum 1.5” thick foam.

C. Shelter shall comply with all requirements of the most recent International Building Code (IBC) with minimum 19/32” wood encapsulated within interior surface of all walls, roof, and doors.

2.9 PUMPS

A. Description
1. Pumps shall be horizontal, self-priming sewage pumps, specifically designed for pumping raw, unscreened, domestic sanitary sewage. The pumps shall be T6A3S-B SUPER T Series self-priming centrifugal solids handling pumps as manufactured by Gorman-Rupp Pump Company.

B. Material
1. Wall areas of the pump casing and volute which are exposed to sewage shall be constructed of cast iron of no lesser grade than class 30.

C. Internal passages

1. All openings, internal passages, and internal recirculation ports shall be large enough to permit the passage of a sphere 3" in diameter, and any trash or stringy material which may pass through the average house collection system. Screens or any internal devices that create a maintenance nuisance or interfere with priming and performance of the pump shall not be permitted.
2. Upon request from the engineer, certified dimensional drawings indicating size and locations of the priming recirculation port or ports shall be submitted to the engineer prior to shipment.

D. Pump performance
1. Each pump must have the necessary characteristics and be properly selected to perform under the following operating conditions:
   a. Capacity, in GPM — 600
   b. Total dynamic head, in feet — 9 (3' minimum)
   c. Total dynamic suction lift, in feet — Flooded
2. Consideration shall be given to the sanitary sewage service anticipated, in which occasionally debris will lodge between the pump suction check valve and seat, resulting not only in the loss of liquid in the suction leg, but also in the siphoning of liquid from the pump casing to the approximate center line of the impeller. Such occurrence shall be considered normal with proper installation of air release line free to atmosphere.
3. In consideration of such occurrence and of the unattended operation intended, each pump shall be so designed as to retain adequate liquid in the pump casing to insure unattended automatic re-priming while operating at its rated speed in a completely open system without suction check valves and with a dry suction leg.

E. Re-prime performance
1. Each pump must be capable of a re-prime lift of 25 feet at the selected speed and impeller diameter. Re-prime lift is defined as the static height of pump suction centerline above liquid that the pump will prime; and delivery within five minutes on liquid remaining in the pump casing after a delivering pump is shut down with the suction check valve removed.

F. Cover plate
1. Cover plate shall be cast iron Class 30. Design must incorporate the following maintenance features:
   a. Retained by hand nuts for complete access to pump interior. Cover plate removal must provide ample clearance for removal of stoppages, and allow service to the impeller, seal, wear-plate, or check valve without removing suction or discharge piping.
   b. A replaceable wear-plate secured to the cover plate by weld studs and nuts shall be AISI 1015 HRS.
   c. In consideration for safety, a pressure relief valve shall be supplied in the cover plate. Relief valve shall open at 75-200 psi.
   d. Two O-rings of BUNA-N material shall seal cover plate to pump casing.
   e. Pusher bolt capability to assist in removal of cover plate. Pusher bolt threaded holes shall be sized to accept same retaining cap-screws as used in rotating assembly.
   f. Easy-grip handle shall be mounted to face of cover plate.

G. Rotating assembly

1. A rotating assembly, which includes impeller, shaft, mechanical shaft seal, lip seals, bearings, seal-plate and bearing housing, must be removable as a single unit without disturbing the pump casing or piping. Design shall incorporate the following features:
   a. Seal-plate and bearing housing shall be cast iron Class 30. Separate oil filled cavities, vented to atmosphere, shall be provided for shaft seal and bearings. Cavities must be cooled by the liquid pumped. Three lip seals will prevent leakage of oil.
   b. The bearing cavity shall have an oil level sight gauge and fill plug check valve. The clear sight gauge shall provide easy monitoring of the bearing cavity oil level and condition of oil without removal of the fill plug check valve. The check valve shall vent the cavity but prevent introduction of moist air to the bearings.
   c. The seal cavity shall have an oil level sight gauge and fill/vent plug. The clear sight gauge shall provide easy monitoring of the seal cavity oil level and condition of oil without removal of the fill/vent plug.
   d. Double lip seal shall provide an atmospheric path providing positive protection of bearings, with capability for external drainage monitoring.
   e. Pusher bolt capability to assist in removal of rotating assembly. Pusher bolt threaded holes shall be sized to accept same cap-screws as used for retaining rotating assembly.

H. Suction check valve
1. Each pump shall incorporate a suction valve that can be removed or installed through the removable cover plate opening, without disturbing the suction piping. Sole function of check valve shall be to eliminate re-priming with each cycle. Pumps requiring suction check valves to prime or re-prime will not be acceptable.

I. Impeller clearance adjustment
1. Clearances shall be maintained by external shim-less cover plate adjustment, utilizing collar and adjusting screw design for incremental adjustment of clearances by hand. Requirement of realignment of belts, couplings, etc., shall not be acceptable. Cover plate shall be capable of being removed without disturbing clearance settings.
2. There shall be provisions for additional clearance adjustment in the event that adjustment tolerances have been depleted from the cover plate side of the pump. The removal of stainless steel shims from the rotating assembly side of the pump shall allow for further adjustment as described above.
3. Clearance adjustment by means of positioning the shaft only toward the wear plate, thereby reducing pressure on the seal, shall not be acceptable.

2.10 CONSTRUCTION

A. Impeller
1. The impeller shall be two-vane, semi-open, non-clog, cast in ductile iron with integral pump out vanes on the back shroud. Impeller shall thread onto the pump shaft and be secured with a lock screw.

B. Seal
1. The pump shaft shall be sealed against leakage by a mechanical seal. Both the stationary sealing member and mated rotating member shall be of tungsten

titanium carbide alloy. Each of the mated surfaces shall be lapped to a flatness of one-half light band (5.8 Millionths of an inch), as measured by an optical flat under monochromatic light. The stationary seal seat shall be double floating so that faces will not lose alignment during periods of shock loads that will cause deflection, vibration, and axial movement of the pump shaft.

2. The seal shall be lubricated with oil from a separate, oil-filled reservoir. The same oil shall not be used to lubricate both the shaft seal and the shaft bearings.

C. Shaft bearings

1. The pump shaft bearings shall be anti-friction ball or tapered roller bearings, of ample size and proper design to withstand all radial and thrust loads which can reasonably be expected during normal operation. Bearings shall be lubricated from a separate reservoir. Pump designs in which the same oil lubricates both the shaft bearings and the shaft seal shall not be acceptable.

D. Pump suction spool

1. Each pump shall be equipped with a one-piece, cast iron suction spool, flanged on each end. Each spool shall have one 1¼ inch NPT and one ¼ inch NPT tapped hole with pipe plugs for mounting of gauges or other instrumentation.

E. Impeller shaft

1. The impeller shaft shall be constructed of 17-4 pH stainless steel.

2.11 VALVES AND PIPING

A. Check valves

1. Full flow type check valves, capable of passing a 3" spherical solid, shall have cast iron body with flanged ends rated at 125 lbs. Valves shall be fitted with an external spring and lever. Valves through 6" shall have a bronze body ring threaded into the valve port. Valve clapper shall be cast iron, bronze face, and shall swing completely clear of waterway when valve is full open. Hinge pin shall be 18-8 stainless steel construction and shall be utilized with bronze bushings and "O" ring seals. Valves shall be equipped with a removable cover plate to permit entry or for complete removal of internal components without removing the valve from the line. Valve rating shall be 175 psi water working pressure, 350 psi hydrostatic test pressure. Valves mounted in such a manner that prevents the passage of a 3" spherical solid shall not be acceptable.

B. Plug valves

1. Plug valves shall be of the non-lubricated, tapered type. Valve body shall be semi-steel with flanged end connection drilled to ANSI 125 lb. Standard. Valves shall have ports designed to pass spherical solids equal to the pumps capability. Valves shall be furnished with a drip-tight shutoff plug mounted in stainless steel or teflon over phenolic bearings, and shall have a resilient facing bonded to the sealing surface.

C. Gauge kit

1. Each pump shall be equipped with a glycerin-filled compound gauge to monitor suction pressures, and a glycerin-filled pressure gauge to monitor discharge pressures. Gauges shall be a minimum of 4" in diameter, and shall be graduated in feet water column. Rated accuracy shall be 1% of full scale reading. Compound

gauges shall be graduated -30' to +30' water column minimum. Pressure gauges shall be graduated 0 to 70' water column minimum.

2. Gauges shall be mounted on a resilient panel and frame assembly which shall be firmly secured to pumps or piping. Gauge installations shall be complete with all hoses and fittings, and shall include a shutoff valve installed in each gauge inlet at the point of connection to suction and discharge pipes.

D. Flanged header pipe
1. Flanged pipe shall be centrifugally cast, ductile iron, complying with ANSI 21.6 (AWWA C101), and class 53 thickness.
2. Flanges shall be class 125 and comply with ANSI B16.1.

E. All piping
1. Pipe and flanges shall be threaded and suitable thread sealant applied before assembling flange to pipe.
2. Bolt holes shall be in angular alignment within ½-degree between flanges. Flanges shall be faced and a gasket finish applied that shall have concentric grooves a minimum of 0.010 inch deep by approximately 0.030 inch wide, with a minimum of three grooves on any given surface spaced a maximum of ¼-inch apart.
3. Flanged to flexible connection devices shall be provided for each suction and discharge connection, to relieve misalignment stresses.

F. Support and thrust blocks
1. All pipes connected to the pump station shall be supported according to good commercial practice to prevent piping loads from being transmitted to pumps. Piping exterior of pump station shall be anchored with thrust blocks where shown on the contract drawings.

2.12 DRIVE UNIT

A. Motors
1. Note: maximum horsepower is 10 hp at 460 volts.
2. The pump motors shall be horizontal, open drip proof, induction type, with normal starting torque and low starting current characteristics, suitable for the electrical power available. The motors shall not be overloaded at the design condition or at any head in the operating range as specified.
3. Each motor shall be in current NEMA design, cast iron frame, copper windings, 1.15 service factor with class F insulation.

B. Drive transmission
1. Power shall be transmitted from motors to pumps by means of v-belt drive assemblies. The drive assemblies must be selected to establish proper pump speed to meet the specified operating conditions.
2. Each drive assembly shall have a minimum of two v-belts. In no case will a single belt drive be acceptable. Each v-belt drive assembly shall be selected on the basis that adequate power will be transmitted from driver to pump.
3. Drive systems with a safety factor of less than 1.5 To 1 shall not be considered sufficient for the service intended. Computation of safety factors shall be based on performance data published by the drive manufacturer.

C. Belt guards

1. Pump drive transmissions shall be enclosed on all sides in a guard constructed of any one or combination of materials consisting of expanded, perforated, or solid sheet metal, except that maximum perforated or expanded openings shall not exceed ½ inch.
2. Guards shall be manufactured to permit complete removal from the pump unit without interference with any unit component, and shall be securely fastened to the unit base and rigidly braced to some fixed part.
3. All metal shall be free from burrs and sharp edges. Structural joints shall be continuously welded. Panels may be riveted to frames with not more than five-inch spacing. Tack welds shall not exceed a four-inch spacing.
4. The guard shall be primed with a minimum of 1.5 Mils of zinc-based synthetic primer. A finish acrylic enamel coating with a minimum 1.5 Mils shall be applied in accordance with section 3, color definitions of ANSI 253.1; 1967, Safety color code for marking physical hazards.

2.13 FINISH

A. The pumps, piping, and exposed steel framework shall have a prime coat of a zinc base synthetic primer. The finish coat shall be an automotive grade white acrylic enamel.

2.14 ELECTRICAL CONTROL COMPONENTS

A. The electrical control system for the new pumps shall be manufactured by the pump station manufacturer and shall consist of the items shown below. The new control panel will provide a complete control system for the two self-priming horizontal pumps.
   1. Panel enclosure
      a. The electrical control equipment shall be mounted within NEMA 1, enclosures fabricated of stainless steel. Enclosure doors shall be gasketed with neoprene, shall be hinged and shall be equipped with captive closing hardware. Control compartments shall incorporate a removable back panel on which control components shall be mounted. Back panel shall be secured to enclosure with collar studs. The use of an additional control enclosure is permitted for units with size 4 and larger motor starters.
   2. Mounting
      a. All control components shall be securely fastened to a removable back panel with screws and lock washers. Switches, indicators and instruments shall be mounted through the control panel door. Self-tapping screws shall not be used to mount any components. All connections from the back panel to door mounted or remote devices shall be made through terminal blocks.
      b. All operating controls and instruments shall be securely mounted and shall be clearly labeled to indicate function.

2.15 MOTOR BRANCH COMPONENTS

A. Circuit breaker and operating mechanism
   1. A properly sized thermal-magnetic air circuit breaker shall be furnished for each self-priming horizontal pump motor, and shall have a symmetrical rms interrupting rating of 15 amperes at 460 volts. All circuit breakers shall be sealed by the manufacturer after calibration to prevent tampering.

2. A padlocking operating mechanism shall be installed on each motor circuit breaker. Operator handles for the mechanism shall be located on the exterior of the control compartment door, with interlocks which permit the door to be opened only when the circuit breakers are in the "off" position.

B. Motor starters

1. An open frame, across-the-line, NEMA rated magnetic motor starter shall be furnished for each pump motor. Starters of NEMA size 1 and above shall be designed for addition of at least two auxiliary contacts. Starters rated "0", "00", or fractional size are not acceptable. Power contacts shall be double-break and made of cadmium oxide silver. All motor starters shall be equipped to provide under-voltage release and overload protection on all three phases. Motor starter contacts shall be easily replaceable without removing the motor starter from its mounted position. Overload reset pushbuttons shall be located on the exterior of the control panel in such a manner as to permit resetting the overload relays without opening the control panel.

C. Overload relays

1. Overload relays shall be of block-type, utilizing melting alloy type spindles, and shall have visual trip indication with trip-free operation. Pressing of the overload reset lever shall not actuate the control contact until such time as the overload spindle has reset. Resetting of the overload reset lever will cause a snap-action control contact to reset, thus reestablishing a control circuit. Overload relays shall be manually reset only and not convertible to automatic reset. Trip setting shall be determined by heater element only and not by adjustable overload relays.

2.16 OTHER CONTROL COMPONENTS

A. Pump run indicators

1. Control panel shall be equipped with one pilot light for each of the two pump motors. Light shall be wired in parallel with the related pump motor starter to indicate that the motor is or should be running.

B. Elapsed time meters

1. Six digit elapsed time indicators (non-reset type) shall be connected to each of the two motor starter to indicate the total running time of each pump in "hours" and "tenths of hours".

C. High pump temperature protection for horizontal pumps

1. The control shall be equipped to protect the new pumps from damage caused by excessive temperature. Each pump shall be furnished with a temperature switch wired to cause shutdown of the pump motor when the housing exceeds +63□C (+145□F). Such occurrence shall illuminate an indicator to alert the operator to the cause of shutdown. The indicator shall remain illuminated and the pump motor locked out until the pump has cooled and the circuit has been manually reset. Automatic reset of such a circuit shall not be acceptable.

D. Phase Monitor

1. The control panel shall be equipped to monitor the incoming power and shut down the pump motors when required to protect the motor(s) from damage caused by phase reversal, phase loss, voltage unbalance, and low voltage. A time delay shall

be provided to minimize nuisance trips. The motor(s) shall automatically restart when power conditions return to normal.

E. Grounding
1. The pump station manufacturer shall ground all electrical equipment inside the pump station to the enclosure back panel. The mounting surface of all ground connections shall have any paint removed before making final connections.
2. The contractor shall provide an earth driven ground connection to the lift station at the main ground lug in accordance with the National Electric Code (NEC).

F. Transient Voltage Surge Suppressor:
1. The control panel shall be equipped with a transient voltage surge suppressor to minimize damage to the pump motors and control from transient voltage surges. The suppressor shall utilize silicon-oxide varistors encapsulated in a non-conductive housing. The arrestor shall have a current rating of 60,000 Amps, and a Joule rating of 1500.
2.

PART 3 EXECUTION

3.1 GENERAL

A. The general contractor shall assume full responsibility for coordination of the entire project, including verification all structures, piping, coating systems and equipment components are compatible. The general contractor shall initially operate each equipment system, and shall make all necessary adjustments so that each system is placed in proper operating condition.

B. Equipment and materials utilized for this project must be approved by the Engineer prior to installation. Approval for installation or incorporation in this project will be made only after submittal or manufacturer's shop and installation drawings, test results or other data as specified herein.

C. Installation of equipment shall be in full conformance with the manufacturer's shop drawings and requirements as approved by the Engineer. Wherever a conflict arises between manufacturer's instructions and the contract documents, the contractor shall follow the Engineer's decision at no additional cost to the Owner.

3.2 WORKMANSHIP

A. Handle carefully and protect the equipment and appurtenances to avoid damage.

B. The equipment shall be safely secured to the wall and floor in accordance with the Engineer's design drawings. All plumbing and electrical shall be in accordance with state and federal codes to ensure proper operation of the disinfecting system, as-well-as the safety of plant personnel. All piping and tubing shall be sealed for leaks.

C. Any evidence of improper installation shall be corrected by the Contractor. Care during storage, installation and startup shall be in strict accordance with manufacturer's recommendations.

3.3 MANUFACTURER'S SERVICES

A. The Contractor shall require the manufacturer to furnish the services of a qualified field engineer to perform the following functions in the designated period of time. These services are to be performed at the jobsite. A minimum of one (1) visit to the job site shall be required.
   1. Check-out of installation, start-up of equipment and initial operator instruction. This service shall take place after all mechanical equipment associated is installed and mechanically operable.
   2. After equipment is fully operational, and before Owner will assume responsibility for the operation of the equipment, the equipment manufacturer's operation specialists shall instruct the Owner's operating personnel in the care, maintenance and proper operation of the equipment.

B. Field Test
   1. During plant start-up all equipment described herein shall be inspected for proper connections and satisfactory performance by means of a function test.
   2. The equipment system and associated accessories shall be field tested to verify adequate performance.
   3. Units apparently failing to meet the Specifications must be corrected to provide proper service. Should the problem persist due to a flaw in material and/or in the design of the equipment, new equipment must be provided by the Contractor to meet the specifications.

C. Instructions for installation of the equipment system and related appurtenances shall be written and furnished by the manufacturer.

D. Drawings and Data
   1. Complete drawings, construction details, and specifications covering the enclosure, pumps, piping, valves, controls, and appurtenances shall be submitted in accordance with the submittal section.

E. Operation and Maintenance
   1. The equipment system manufacturer shall be responsible for supplying written instruction, which shall be sufficiently comprehensive to enable the operator to operate and maintain all equipment supplied by the manufacturer. Instructions shall assume the operator is familiar with pumping equipment, but he/she has not previously operated and/or maintained the exact equipment supplied.
   2. The instruction shall be prepared as a system manual applicable solely to the equipment supplied by the manufacturer, and shall include those devices and equipment supplied by him.
   3. Operation and maintenance instruction shall be specific to the equipment supplied in accordance with these specifications.

F. Manufacturer's Cost
   1. All costs for the above manufacturer's functions including travel, lodging, meals and incidentals shall be considered to have been included in the contract bid price.

END OF SECTION

THIS PAGE INTENTIONALLY LEFT BLANK FOR DOUBLE SIDED PRINTING

SECTION 46_21_53

PERFORATED FINE SCREEN

PART 1 GENERAL

1.1 SUMMARY

A. The manufacturer will furnish four (4) automatic self-cleaning fine screens, as detailed in these specifications. The manufacturer will also supply the control system required to monitor and control the equipment, as well as any screen appurtenances necessary for the installation. The equipment will be of the latest design and will be fabricated of the specified materials and in a fashion that will fully perform the functions described in these specifications:

1. Northside WWTP – Aqua Guard Model AG-PF-MN-A-2.5'x15'x75x1/4"
2. Southside WWTP – Aqua Guard Model AG-PF-MN-A-2.5'x19'x75x1/4"

Manufacturer to verify final sizing with Drawings prior to bid and certify screen provided will fit without modifications.

B. All listed iron and steel products used in this project must be produced in the United States. The term "iron and steel products" means the following products made primarily of iron or steel: lined or unlined pipes and fittings, manhole covers and other municipal castings, hydrants, tanks, flanges, pipe clamps and restraints, valves, structural steel, reinforced precast concrete, and construction materials. The deminimis and minor components waiver apply to this contract for minor components.

1.2 RELATED SECTIONS

A. Section 01_00_01 Basic Requirements

B. Section 01_33_01 General Submittal Requirements

C. Section 01_33_02 Pre-bid Equipment Submittal Requirements

D. The Contract Documents are a complete unit and complementary to each other. The individual Specification sections and other Contract Documents do not contain all cross references to "related work" or "related sections." It is the Contractor's responsibility to review the complete Contract Documents in order to properly scope, schedule and coordinate the work of any/all subcontractors, suppliers, and others on this project. Anything called out in one location of the Contract Documents is binding as if it were called out in all sections of the Contract Documents.

1.3 SUBMITTALS

A. Submittals for products and miscellaneous items in this specification section shall be submitted in accordance with Section 01_33_01 General Submittal Requirements and related submittal sections and provisions of the Contract Documents.

B. Complete submittal drawings and product information will be submitted to confirm the scope of supply, the fit of the equipment, and conformance to project plans and specifications. As a minimum, the following information will be submitted:
   1. A Letter of Compliance, which confirms any variances with the Contract Plans and Specifications, and provides further explanations where necessary to adequately define the scope of supply.
   2. Dimensional plan and section drawings of the equipment mounted in the structure, showing all utility connections and requirements, and anchor bolt locations. Where applicable, drawings will show connection to associated equipment provided by others.
   3. Approximate weight of each component or piece of equipment.
   4. Manufacturers' catalog information, descriptive literature, and technical specifications.
   5. Power and control wiring diagrams, including terminal layout with numbers, panel construction and panel layout drawings, and control schematics diagrams. Control diagrams will also include a description of operation.
   6. Manufacturers' performance data for all drives.
   7. Hydraulic calculations of the fine screen based on peak and average flows and the specified downstream water levels.
   8. Installation, Operation and Maintenance manuals, which will be submitted after final approval of the equipment. A spare manual will be shipped with the unit in order to allow for proper installation and operation of the equipment prior to the release of all final Installation, Operation, and Maintenance manuals.

1.4 REFERENCES

A. The Contractor and/or Manufacturer shall follow the standards listed below, except as otherwise specified herein. The latest revision or edition in effect at the time of bid opening shall be utilized.
   1. ABMA, American Bearing Manufacturers Association
   2. AGMA, American Gear Manufacturers Association
   3. ANSI, American National Standards Institute
   4. ASME, American Society of Mechanical Engineers
   5. ASTM, American Society of Testing and Materials
   6. AWS, American Welding Society
   7. NEC, National Electric Code

1.5 DELIVERY, STORAGE & HANDLING

1.6 QUALITY ASSURANCE

A. One manufacturer will be responsible for the supply of the equipment specified in this specification. The equipment manufacturer will have no less than ten (10) years' experience in the design and manufacturing of fine screens in North America. The equipment manufacturer will have more than 100 fine screens operating in North America, and no less than ten (10) fine screens equipped with perforated plates operating in North America.

B. The contract plans and specifications are based on Parkson's Aqua Guard® Perf Screen design. If an alternative manufacturer's design is selected, the installing contractor will be

responsible for all changes associated with that design, including the cost of the consulting engineer to review and confirm the use of the alternative design.

C. Where a manufacturer's standard equipment and/or model number is listed, the equipment will be provided as modified to conform to the performance, function, features, and materials of construction specified herein.

1.7 PERFORMANCE REQUIREMENTS

A. The automatic self cleaning fine screen will be designed to meet the following requirements:

1. The screens will be designed for an outdoor installation, in an unclassified area.
2. The screen controls will be designed for an outdoor installation, in an unclassified area.
3. The screen will be designed to present a clean filtration surface to the oncoming liquid stream in the form of a continuous screen belt loop. The screen will remove material larger than the screen belt perforations, lift the material above the operating floor, and discharge the material at an acceptable height above the operating floor.
4. The screen will be capable of continuous or intermittent operation in order to optimize screenings removal and minimize screen run time.
5. The screen belt speed will be seven (7) feet per minute.
6. Dimensional requirements. Verify with construction Drawings which shall supersede table.

a.	Channel Width:	2′ 6″
b.	Discharge Height:	19′ (Southside) 15′ (Northside)
c.	Channel Depth:	14′ (Southside) 10′ (Northside)
d.	Screenings Drop-Off Height	4′ 3″
e.	Screen Installation Angle:	75 deg
f.	Channel recess:	9″

7. Screening requirements:

a.	Screen Opening (diameter of perforations):	¼″
b.	Screen Open Area:	48%

8. Flow requirements:

a.	Influent type:	Domestic Sewage
b.	Peak flow:	6.5 MGD
c.	Downstream water level (at peak flow):	1.00 ft
d.	Max headloss (at peak flow):	15″

9. Utility requirements:

a.	Spray Wash Water (per screen)	15 GPM

10. Power Supply 460 V / 3 ph / 60 Hz

1.8 WARRANTY

A. The manufacturer shall warrant the equipment to be of quality construction, free from defects in materials and workmanship. The warranty shall become effective upon acceptance of the project by the Owner (after completion of final inspection.)

B. The equipment, apparatus, and parts furnished shall be warranted from a period of one (1) year, excepting only those items that are normally consumed in service, such as oil, grease, gaskets, o-rings, etc. The manufacturer shall be solely responsible for the warranty of the equipment and all components.

C. Upon request from the Engineer and/or the Owner, the manufacturer shall demonstrate proof of financial responsibility with respect to performance and delivery date. In addition, the manufacturer shall provide proof of evidence of facilities, equipment, and skills required to produce the equipment specified herein and provide technical service and replacement parts.

D. Components failing to perform as specified by the Engineer, or as represented by the manufacturer, or proven defective in service during the warranty period, shall be replaced, repaired, or satisfactorily modified by the manufacturer without cost of kind to the Owner.

E. It is not intended the manufacturer assume liability for consequential damages or contingent liabilities arising out of failure of any product or parts thereof to operate properly, however caused by or resulting from or arising out of defects in design or manufacture, delays in delivery, replacement, or otherwise.

PART 2 PRODUCTS

2.1 MANUFACTURER

A. Acceptable manufacturer
   1. The automatic self-cleaning fine screen will be manufactured by Parkson Corporation, Vernon Hills, IL. Model will be an AG-PF-MN Aqua Guard® Perf Screen.
   2. No alternative manufacturers will be accepted.

2.2 QUALITY ASSURANCE

A. The screens will be fully assembled and tested in the U.S. factory for a minimum of 1/2 hour to confirm the fit and function of the screen.

B. The screen will be shipped to the site as fully assembled as possible. Some components may be removed to prevent damage during shipment.

2.3 MATERIALS AND FABRICATION

A. Materials
   1. The screen will be fabricated primarily in stainless steel. Where stainless steel is noted in these specifications as the material of construction, the type of stainless steel will be 304.
   2. Hardware will be supplied in type 18-8 stainless steel.
   3. Nameplates will be stainless steel, stamped and fastened to the screen with stainless steel rivets.
   4. Other materials of construction are as noted in these specifications.

B. Design

1. The fine screen will consist of a screen frame with screen mounting brackets, an adjustable continuous screen belt that is driven by a direct drive system,a screen belt cleaning system including a water spray header and an adjustable rotating brush, covers above the operating floor including panels for inspection access, and seals to eliminate flow and screenings by-pass.
2. A controls system will be furnished to monitor and control the screen andwash press unit.

C. Screen Frame

1. The screen frame will provide the support structure for all screen components. The screen frame will rest on the bottom of the channel and be supported and anchored at the operating floor. No mounting or fastening of the screen to the sidewalls or the bottom of the channel will be allowed.
2. The screen frame will be fabricated of 1/4 inch thick stainless steel plate. The frame will be adequately braced to accommodate the expected loads.
3. Front and rear guide rails will be mounted on the inside of the frame to guide and support the screen belt as it travels through its cycle. The guide rails will measure 1/2 inch x 1/2 inch, and be constructed of stainless steel. Plastic or ferrous metal guide rails will not be allowed.
4. Bottom guides will be provided at the base of the screen to direct the screen belt during its 180-degree turn at the bottom of the screen. Bottom guides will be 1/2 inch thick, and be constructed of stainless steel. Plastic guides or rotating guides with submerged bearings and bushings will not be allowed.
5. Screen mounting brackets will be provided on each side of the frame to allow the frame to be secured to the structure at the operating floor. Supports will be fabricated of 3/8 inch thick (minimum) stainless steel plate.

D. Screen Belt

1. The continuous screen belt will consist of a series of close fitting perforated screen panels that are mounted on and driven by a drive chain on each end of the panels.
2. Each screen panel will be fabricated from 11 ga (.120 inch) type 304L stainless steel perforated sheet, formed to provide a 2-½ inch shelf for lifting solids out of the channel. The perforations will be provided on the face and the shelf of the panels; no perforations will be allowed in the sharp bend areas of the screen panels. Support plates will be welded to the ends and in the middle of the formed perforated sheet. The end support plates will be provided with weld nuts for mounting of the screen panel onto the drive chains.
3. Each drive chain will consist of chain links assembled with pins, bushings, and rollers to provide a continuous strand. Each drive chain will have an ultimate strength of 10,000 lb.
4. Chain links will have a cross section of 1.62 inch x 3/16 inch, and have a pitch of 7.87 inches (200 mm). Links will be made of stainless steel. Inner links will be fabricated with a mounting bar to provide the means to fasten the screen panels to the chain.
5. Rollers will be made of 416 Stainless Steel, having a minimum hardness of 39 (Rockwell C). Every other roller will be flanged on one end to assist in guiding the chain through its cycle. Rollers will be machined to an OD of 1.77 inch, with the flange machined to an OD of 2.17 inch.

6. Bushings will be made of 416 Stainless Steel, having a minimum hardness of 39 (Rockwell C). Bushings will be machined to an OD of 1.24 inch.
7. Pins will be made of wrought 416 Stainless Steel, having a minimum hardness of 39 (Rockwell C). Pins will be machined to an OD of 1.00 inch. The ends of each pin will be machined with snap ring grooves to accommodate snap rings for securing the chain components.
8. Overlapping side plates will be sandwiched between the end of the screen panel and the chain, to enclose the ends of the screen belt. Side plates will be made of 16 ga (.059 inch) stainless steel.
9. The screen belt is supported by a drive shaft with two (2) sprockets. The shaft ends extend beyond the screen frame and are mounted on take-up bearing assemblies.
10. Drive shaft and sprockets will be made of 304 Stainless Steel. Sprocket teeth will have a pitch diameter of 18.15 inches.
11. Bearings will be spherical roller type, mounted in take-up housings and provided with centralized lubrication points for periodic lubrication.
12. A take-up bracket and take-up rod will be mounted on the screen frame and secured to the bearing housings to hold the position of the drive shaft and allow for adjustment of the screen belt tension. Bracket will be made of stainless steel. Take-up rods and associated hardware will be made of 304 Stainless Steel.

E. Screen Belt Drive System
1. The screen drive system provides the necessary power to drive the screen belt through its cycle under expected loading conditions.
2. The gear reducer will be shaft mounted to the screen drive shaft; reducer will be supplied with a keyless tapered bushing to facilitate installation. A torque arm is fastened to the gear reducer, and tied into the take-up assembly, which allows the drive system to move when the screen belt position is adjusted.
3. The gear reducer will be a cyclo / spiral bevel gear arrangement, which provides the required output torque at an output speed of 1.57 rpm. The gear reducer will be grease lubricated in the input section, and oil lubricated in the output section. A breather will be provided in the oil lubricated section.
4. The screen drive motor will be a 460 voltage, 3 Phase, 60 Hz, minimum 1/2 HP TEFC motor. The motor will be provided in a NEMA C-face frame and close coupled to the gear reducer.

F. Screen Belt Cleaning System
1. A dual-pattern spray header and a high speed rotating brush will provide effective cleaning of the screen belt. Screenings removed by the spray and brush will be directed into the screenings discharge chute.
2. A spray header assembly will be provided on the inside of the screen belt. The dual-pattern spray will be designed to clean the perforated surfaces (face and shelf) of each screen panel.
3. The spray header pipe will be a 1-1/4" NPT schedule 40 pipe, made of stainless steel.
4. The spray header will be machined with tapped holes to accommodate two rows of spray nozzles. One row will be Vee-Jet type nozzles, providing a straight spray pattern to clean the face of the screen panels. The other row will be Flat-Jet type nozzles, providing a deflected spray pattern to clean the shelf of the screen panels. Nozzles will be made of type 304 stainless steel. Each nozzle will have a capacity of 1 gpm at 40 psi (1.2 gpm at 60 psi).

5. Each end of the spray header will be provided with a schedule 80 PVC pipe coupling. One end will include a PVC pipe plug. Source water can be connected at either end of the header.
6. The spray header will be mounted on two (2) adjustable flanges that are fastened to the screen frame. Flanges will be made of stainless steel.
7. The rotating brush assembly will consist of a split core brush that is fastened to a drive shaft. The brush drive shaft is supported by two (2) bearings mounted on adjustable brackets. The split core design allows removal of the brush without removing the brush drive shaft and bearings.
8. The core of the brush will be made of 6063-T6 aluminum, and split into two halves. The core will be extruded with longitudinal channels that are used to secure rows of brush bristles.
9. The brush will consist of a total of sixteen (16) rows of nylon brush bristles running the width of the screen panels and equally spaced from each other. The brush will have an OD of 21 inches.
10. Aluminum flanges will be keyed and fastened to the brush drive shaft. Flanges will have a profile that matches the inside diameter of the brush core, and allows the core to be fastened to the flanges.
11. The brush drive shaft will be made of stainless steel.
12. The brush drive shaft will extend beyond the screen frame, and be supported by flanged mounted ball bearings on each end. Bearings will be provided with grease zerks for periodic lubrication. Bearings will be mounted on adjustable brackets made of minimum 1/4" thick stainless steel, which allow the drive shaft and brush to be linearly adjusted for optimum brush contact with the travelling screen belt.

G. Brush Drive System
1. The brush drive system provides the necessary power to drive the brush as it contacts and removes screenings from the face of the travelling screen belt.
2. The gear reducer will be shaft mounted to the brush drive shaft; reducer will be supplied with a keyless tapered bushing to facilitate installation. A torque arm is fastened to the gear reducer, and tied into the adjustable brush mounting bracket, which allows the drive system to move when the brush position is adjusted.
3. The gear reducer will be a cyclo / helical gear arrangement, which provides the required output torque at an output speed of 83 rpm. The gear reducer will be grease lubricated in the input section, and oil lubricated in the output section. A breather will be provided in the oil lubricated section.
4. The brush drive motor will be a 460 voltage, 3 Phase, 60 Hz, 1 HP TEFC motor. The motor will have a 1.15 service factor and be suitable for use in a severe environment. The motor will be provided in a NEMA C-face frame and close coupled to the gear reducer.

H. Covers
1. Covers will be provided to enclose the screen frame above the operating floor.
2. Covers will be made of 14 ga (.075 inch) stainless steel.
3. Covers will be bolted to the screen frame, and can be removed as required to service the screen.
4. A hinged and gasketed door will be provided above the discharge chute, to allow inspection access to the rotating brush. The hinges and door will be made of stainless steel and will be removable for unobstructed access when required to replace the brush.

5. A bolted and gasket access panel will be provided on each side of the screen frame to allow inspection access to the screen belt. Access panels will also be utilized when screen panels must be removed to service the screen. Panels will be made of stainless steel.

I. Front Seals
1. Front seals will be provided to ensure that flow is directed through the screen belt.
2. Front inner seals will consist of a neoprene seal mounted on an adjustable stainless steel bracket. The front seals will be positioned parallel to the screen panel side plates and prevent flow by-pass between the screen belt and the screen frame.
3. Front outer seals will be neoprene seals that are mounted between the front inner seal brackets and the screen frame, and extend outward to positively contact the channel walls and prevent flow by-pass between the screen frame and the channel walls.
4. A bottom seal will consist of a neoprene seal mounted between two stainless steel reinforcing plates, and fastened to the bottom plate of the screen frame. The seal extends upward to maintain contact with the travelling screen belt throughout its cycle and prevent flow by-pass under the screen belt.

J. Chute Seals
1. The chute seal will deflect spray water and screenings into the screenings discharge chute and prevent screenings from falling back into the flow downstream of the screen belt.
2. The chute seal will be made of 3/8" thick reinforced neoprene belting.
3. A stainless steel reinforcing plate will be provided to fasten the chute seal to the discharge chute.
4. The lead face of the discharge chute shall be fitted with a flexible silicone rubber wire wound heater to prevent material from freezing to the surface and creating a build up that could cause damage to the filter belt assembly as it passes. The heater shall have an integral thermostat to regulate the heating element.

K. Surface Treatment
1. All stainless steel components and sub-assemblies will be mechanically cleaned using DuPont Starblast. Additionally, an acid passivation paste will be applied in the welded and heat affected areas to locally passivate these areas. After passivation, the weldments will be thoroughly rinsed with clean water and allowed to air dry.
2. Sheet metal components, such as covers, will be furnished with a 2B mill finish.
3. Motors, gear reducers, and bearings will be provided with the manufacturers' standard finish suitable for a severe environment.
4. Plastic parts will remain unfinished.
5. tic parts will remain unfinish.

L. Electrical Devices & Controls
1. In addition to the drive motors, the following electrical devices and controls will be supplied.
2. A NEMA 4X emergency stop pushbutton station will be mounted on the side of the screen frame. E-stop will be rated for use in a 120 volt circuit and provided with a 1/2 inch conduit opening.

3. E-Stop will be wired to the control panel to cause all unit functions to cease upon pressing the E-Stop. Proper wiring from the E-Stop to the control panel will be the responsibility of the contractor.
4. When the screen is in operation, the water spray will be actuated by a normally closed solenoid valve. The solenoid valve will have a brass body with NPT pipe connections (solenoid pipe threads to match header pipe threads).
5. The solenoid valve requires 115 volt, 60 Hz, single phase power and will be provided with an 18 inch long 18/3 lead. Electrical housing will be rated NEMA 4X, and provided with a 1/2" NPT conduit connection.
6. The solenoid valve will be shipped loose to be field installed by the contractor in the respective wash water supply line. Proper wiring from the solenoid valve to the control panel will be the responsibility of the contractor.
7. A mercury type float switch of chemical resistant polypropylene construction will be provided with a 316 SST pipe mounting bracket, float mounting clamp and expansion anchors. The mounting bracket requires a suitable length of 1" nominal pipe to suspend the float in the channel, to be supplied by others. The float will have a 20-foot long integral cable.
8. The screen will be equipped with a thermostat that will actuate the screen when ambient temperatures drop below 35 degrees F. The thermostat will be rated NEMA 4X. The thermostat will be installed on the screen control panel, when the control panel is mounted in close proximity to the screen. Otherwise, the thermostat will be mounted on the screen frame. When the thermostat is mounted on the screen, field wiring to the control panel will be the responsibility of the contractor.
9. A 460 volt UL listed triple control panel will be provided in a NEMA 4X type 304 stainless steel enclosure suitable for wall mounting. It will contain the following logic devices for proper operation of one (1) screen and one (1) wash press:
    a. Main breaker switch.
    b. Motor starters.
    c. Overload protection
    d. 460 to 120 Volt Control Power Transformer.
    e. Programmable relay to monitor equipment mounted electrical devices and to perform the necessary logic functions.
    f. Run Time meters.
    g. Emergency Stop push button.
    h. Fault reset button.
    i. Control power and run indicating lights.
    j. Fault lights.
    k. Run and fault auxiliary output contacts for customer use.
10. Sequence of Operation (Overview)
    a. When the respective selector switch is in Hand mode, the screen, brush and spray will run continuously.
    b. When all of the selector switches are in Auto mode, the screen and brush drive motors and spray will be controlled per the automatic control logic:
    c. The screen will run via the liquid level sensing system. When the upstream liquid level reaches the switch point (adjustable), the screen, brush and spray water will operate continuously. Screen, brush and spray will be turned off 5 minutes (adjustable time) after the liquid level drops below the switch point.

d. An adjustable time clock override will be provided, to ensure that the screen runs for a minimum amount of time, regardless of the flow conditions.
e. The screen and brush are protected by their respective motor starter overload relay. Additionally, the screen is protected by a power monitor. In the event of an overload condition, the screen will immediately shut down, and a fault light will illuminate. When the screen shuts down due to an overload condition, the screen will not restart until the alarm condition has been cleared and the reset button is pressed.
f. Refer to project-specific Control Panel drawings for additional control logic designed specifically for this project.

2.4 CONTRACTOR RESPONSIBILITIES

A. The contractor will be responsible for reviewing the design of the equipment provided by the manufacturer, so that it fits properly in the structure and interfaces properly with associated equipment provided by others.

B. The contractor will be responsible for receiving the equipment, unloading it from the common carrier, and storing it safely until it is ready to be installed.

C. The contractor will install the manufacturer's equipment in accordance with the manufacturer's Installation, Operation and Maintenance instructions.

D. The contractor will provide all field wiring between the electrical devices on the screen (motors, switches, valves, etc.) and the control panel. Contractor will also provide all required local disconnects and junction boxes.

E. The contractor will provide all field piping, fittings, isolation valves, and components required to supply the necessary wash water to the screen spray system.

F. The contractor will be responsible for supplying and installing sixteen (16) ¾-inch stainless steel anchor bolts. Anchor bolts will be ¾ inch-10 x 10" lg. UNC threaded rods for use with the HILTI HY-200 adhesive anchoring system (provided by the contractor).

PART 3 EXECUTION

3.1 INSPECTION AND STORAGE

A. Screen will be shipped assembled and as much as possible (depending on size of unit, drives and supports may be shipped loose). The contractor will be responsible for inspecting the equipment upon receipt of goods at the jobsite, unloading, and storing the equipment in a reasonable manner and protecting the motors, gearboxes, and controls from the weather in accordance with the Installation Operation and Maintenance manual.

3.2 INSTALLATION

A. The contractor will install the fine screen in the structure, according to the Contract Documents and the approved submittals provided by the manufacturer, and following the instructions detailed in the Installation Operation and Maintenance manual.

B. Upon completion of installation by the contractor and startup of the equipment by the manufacturer's field service representative, the equipment will be operated under the supervision of the contractor for a minimum of eight (8) hours to ensure that all operating characteristics are within acceptable limits.

3.3 STARTUP AND FIELD SERVICE ASSISTANCE

A. The contractor will obtain the services of a qualified factory representative for installation inspection, startup, and training of the plant operations staff. The service representative will make one (1) trip to the site, and be on site for two (2) full days.

B. During this trip, start-up services will also be provided for the screenings washer/compactor (AWP).

END OF SECTION

THIS PAGE INTENTIONALLY LEFT BLANK FOR DOUBLE SIDED PRINTING

SECTION 46_21_73.13

SCREW WASHER COMPACTOR

PART 1 GENERAL

1.1 SUMMARY

A. The manufacturer will furnish four (4) model AWP8-2 Aqua Washpress units, as supplied by Parkson Corp., Vernon Hills, IL. The Aqua Washpress units will consist of a main body, screw, wash spray, flush spray, drive system, covers, inlet chute, discharge piping and controls.
   1. Northside WWTP – two (2)
   2. Southside WWTP – two (2)

B. The equipment will be of the latest design and will be fabricated of the specified materials and in a fashion that will fully perform the functions described in these specifications.

C. The contract documents and specifications are based on Parkson's Aqua Washpress Model AWP8-2 design. Any changes in layout, access platforms, piping or structural requirements for an alternative manufacturer's design will be the responsibility of the installing contractor, including the cost of the engineer to verify layout, sizing, and structural requirements.

D. The Aqua Washpress unit will be inclined at 0 degrees from horizontal. The discharge piping will be designed to direct the screenings from the unit into the designated receptacle or receiving equipment.

E. All listed iron and steel products used in this project must be produced in the United States. The term "iron and steel products" means the following products made primarily of iron or steel: lined or unlined pipes and fittings, manhole covers and other municipal castings, hydrants, tanks, flanges, pipe clamps and restraints, valves, structural steel, reinforced precast concrete, and construction materials. The deminimis and minor components waiver apply to this contract for minor components.

1.2 RELATED SECTIONS

A. Section 01_00_01 Basic Requirements

B. Section 01_33_01 General Submittal Requirements

C. Section 01_33_02 Pre-bid Equipment Submittal Requirements

D. The Contract Documents are a complete unit and complementary to each other. The individual Specification sections and other Contract Documents do not contain all cross references to "related work" or "related sections." It is the Contractor's responsibility to review the complete Contract Documents in order to properly scope, schedule and coordinate the work of any/all subcontractors, suppliers, and others on this project. Anything called out in one location of the Contract Documents is binding as if it were called out in all sections of the Contract Documents.

1.3 SUBMITTALS

A. Submittals for products and miscellaneous items in this specification section shall be submitted in accordance with Section 01_33_01 General Submittal Requirements and related submittal sections and provisions of the Contract Documents.
   1. Complete submittal drawings, quality control and product information will be submitted. As a minimum, the following information will be submitted:
   2. A Letter of Compliance, which confirms any variances with the Contract Plans and Specifications, and provides further explanations where necessary to adequately define the scope of supply.
   3. Dimensional plan and section drawings of the equipment mounted in the structure, showing all utility connections and requirements, and anchor bolt locations. Where applicable, drawings will show connection to associated equipment provided by others.
   4. Approximate weight of each component or piece of equipment.
   5. Manufacturers' catalog information, descriptive literature, specifications, and identifications of material of construction.
   6. Power and control wiring diagrams, including terminal layout with numbers, panel construction and panel layout drawings, and control schematics diagrams. Control diagrams will also include a description of operation.
   7. Manufacturers' performance data for all drives.
   8. Installation, Operation and Maintenance manuals, which will be submitted after final approval of the equipment. A spare manual will be shipped with the unit in order to allow for proper installation and operation of the equipment prior to the release of all final Installation, Operation, and Maintenance manuals.

1.4 REFERENCES

A. The Contractor and/or Manufacturer shall follow the standards listed below, except as otherwise specified herein. The latest revision or edition in effect at the time of bid opening shall be utilized.
   1. AGMA, American Gear Manufacturers Association
   2. ASME, American Society of Mechanical Engineers
   3. ASTM, American Society of Testing and Materials
   4. ANSI, American National Standards Institute
   5. NEC, National Electric Code
   6. ABMA, American Bearing Manufacturers Association

1.5 DELIVERY, STORAGE & HANDLING

1.6 QUALITY ASSURANCE

A. The equipment manufacturer will have a minimum of five (5) years of design and manufacturing experience with screw wash press units, with not less than one-hundred (100) screw wash press units sold and installed in similar applications. Manufacture will include U.S. installation list with the equipment submittal.

1.7 PERFORMANCE REQUIREMENTS

A. The Aqua Washpress unit will be capable of the following performance:

1. The Aqua Washpress unit will be designed to receive and wash screenings, then reduce the volume and water content by means of a pressing action. Screenings to be washed will be gravity fed to the drainage trough and conveyed by the screw towards the washing section. Wash water is added, which back flows the screenings, while the spiral alternately stops and restarts to convey the screenings through the wash section. The wash water is then turned off and the screenings are discharged and dewatered by the backpressure generated in the discharge pipe.
2. The unit will be installed outdoors in an unclassified area.
3. The unit's controls will be installed outdoors in an unclassified area.
4. The unit will be suitable for installation and operation in the designated space.
5. The unit will have an inlet capacity of 35 cubic feet per hour, handling wet screenings with an approximate dry weight of not less than 8% solids.
6. Utilities
   a. Total Spray wash (max @ 60 psi): 15 gpm
   b. Power Supply 460 / 3/ 60

1.8 WARRANTY

A. The manufacturer shall warrant the equipment to be of quality construction, free from defects in materials and workmanship. The warranty shall become effective upon acceptance of the project by the Owner (after completion of final inspection.)

B. The equipment, apparatus, and parts furnished shall be warranted from a period of one (1) year, excepting only those items that are normally consumed in service, such as oil, grease, gaskets, o-rings, etc. The manufacturer shall be solely responsible for the warranty of the equipment and all components.

C. Upon request from the Engineer and/or the Owner, the manufacturer shall demonstrate proof of financial responsibility with respect to performance and delivery date. In addition, the manufacturer shall provide proof of evidence of facilities, equipment, and skills required to produce the equipment specified herein and provide technical service and replacement parts.

D. Components failing to perform as specified by the Engineer, or as represented by the manufacturer, or proven defective in service during the warranty period, shall be replaced, repaired, or satisfactorily modified by the manufacturer without cost of kind to the Owner.

E. It is not intended the manufacturer assume liability for consequential damages or contingent liabilities arising out of failure of any product or parts thereof to operate properly, however caused by or resulting from or arising out of defects in design or manufacture, delays in delivery, replacement, or otherwise.

PART 2 PRODUCTS

2.1 MANUFACTURER

A. Acceptable manufacturer
   1. The Aqua Washpress unit will be manufactured by Parkson Corporation, Vernon Hills, IL.

2. No alternative manufacturers will be accepted.

2.2 QUALITY ASSURANCE

A. The equipment will include all necessary devices, such as machinery guards, emergency stops, warning labels, and similar items.

B. Threaded fitting will have a standard tapered pipe threads complying with ANSI/ASME B1.20.1.

C. Bearings will conform to the standards of ABMA.

D. Gear reducer selections will comply with AGMA standards and gear reducer's recommendations.

E. Nameplates will be engraved stainless steel and stamped and fastened to the equipment with stainless steel rivets.

F. The equipment will be factory assembled and tested for a minimum of 30 minutes at the U.S. factory prior to delivery. The Engineer and/or Owner may witness the factory test, at their own option and expense.

G. The equipment will be delivered to the site as fully assembled as possible. Some components may be removed from the unit after shop testing to prevent damage during shipment' these components must be re-assembled on the unit by the Contractor.

2.3 MATERIALS of CONSTRUCTION AND FABRICATION

A. MAIN BODY

1. The main body will consist of a drainage trough and a washer barrel, enclosed by an outer housing and a support leg at each end. The main body will be constructed of type 304L stainless steel for all welded components; to minimize corrosion in the heat affected zones, and type 304 stainless steel for all non-welded components.

a. DRAINAGE TROUGH

1) The drainage trough will be the perforated inlet area of the unit, which captures screenings and allows liquid to drain. The inlet area will measure 11" wide x 27 inches long. The drainage trough will be constructed from 12 gauge (0.11") stainless steel with 0.19 inch diameter perforations.

b. WASHER BARREL

1) The washer barrel will provide a washing zone and a dewatering zone for the incoming screenings. The washer barrel will be constructed of 0.25 inch thick stainless steel, with three distinct perforated drainage zones having 0.19 inch diameter holes chamfered to 0.38 inch diameter on the outside. The inside of the washer barrel will be provided with six (6) 0.25 inch thick by 1.50 inch wide replaceable wear bars with 400 Brinnel hardness.

c. OUTER HOUSING

1) The outer housing will enclose the sides and bottom of the drainage trough and washer barrel. The outer housing will collect

drained liquid from the drainage trough and washer barrel and direct the liquid to a 4.0 inch drain tube. Access panels will be provided on the outer housing in the washer barrel area to facilitate servicing of the washer barrel. The outer housing will be constructed from 10 gauge (0.135 inch) thick stainless steel.

d. SUPPORT LEGS

1) A support leg will be provided at each end of the main body to support the main body, provide the means to mount the drive assembly (at the drive end), and provide the means to mount discharge piping (at the discharge end). Each support leg will be designed to allow the screw to be removed from either end of the main body. Each support leg will be provided with a footpad and anchor bolt holes, to secure the unit to the structure.

B. SCREW

1. The shafted screw will be provided to convey screenings through the various stages of the unit. The screw will be constructed of carbon steel and finished with alkyd enamel paint. The spiral will be 8.00 inches OD and have minimum 0.63 inch thick flights. A replaceable 0.25 inch wide nylon brush with a stainless steel casing will be attached with bolted clips to the spiral OD throughout the inlet area to scour the perforated sheet. The brush OD will be 8.50 inches.

C. WASH SPRAYS

1. The wash zone will include a spray wash system to wash organic residue from screenings. The wash zone spray will consist of one (1) spray header, four (4) water injection points, one (1) ball valve and one (1) solenoid valve. The solenoid valve body will be of brass construction with Buna seals. The ball valve will be of brass construction with a stainless steel ball. The system will have an output of 10 GPM at 60 psi. The spray connection will be ½ inch NPT.

D. FLUSH SPRAYS

1. The press will include a single point spray wash system to flush organic residue trapped in the outer trough. The flushing spray will consist of one (1) spray header, one (1) ball valve and one (1) solenoid valve. The solenoid valve body will be of brass construction with Buna seals. The ball valve will be of brass construction with a stainless steel ball. The system will have an output of 15 GPM at 60 psi. The spray connection will be ½ inch NPT.

E. DRIVE SYSTEM

1. The unit drive system will consist of a gearmotor mounted on a sealed drive mounting bracket and a drive shaft that connects the gear reducer output to the shaft of the screw.

a. GEARMOTOR

1) The gearmotor will be a single speed, dual voltage SEW Eurodrive motor direct coupled to an SEW Eurodrive helical gear reducer.

2) The electric motor will be a 3 horsepower for severe duty motor with a 1.15 service factor, rated for use in a 40° C ambient temperature. The TEFC motor will be NEMA design B with Class F insulation, 1800 rpm output speed, and a 230/460 volt, 3-phase, 60 Hz power supply. The motor conduit box will have one (1) 1/2 inch NPT and one (1) 3/4" NPT conduit connection.

3) The gear reducer will be AGMA class II (1.6 service factor) with a minimum 94% efficiency, producing an output speed of 14 rpm and an output torque of 13,900 inch-pounds. Heavy duty tapered roller bearings in the gear reducer will provide a maximum thrust capacity of 6,740 pounds.
4) Gear reducers with service factors of less than 1.4 and efficiencies of less than 94% will not be allowed.

b. DRIVE MOUNTING BRACKET
1) A drive mounting bracket will be provided to mount the gearmotor to the drive end support leg of the unit. The bracket will be made of type 304L stainless steel.
2) A compression type packing gland seal will be provided on the mounting bracket to seal the drive shaft. PTFE packing rings will be fitted into the seal housing, and held in place by a two-bolt stainless steel gland follower.

c. DRIVE SHAFT
1) The drive shaft will be direct coupled to the spiral and constructed of carbon steel. The shaft will be painted, except in the area of the shaft that extends into the hollow bore of the reducer.

F. INLET HOPPER AND COVER
1. A 12 gauge (0.105 inch) stainless steel inlet hopper will be supplied to direct screenings and liquid into the drainage trough. The chute will be flange bolted to the trough, with each side of the chute being a minimum 60 degrees from horizontal.
2. A 12 gauge (0.105 inch) stainless steel cover will be supplied to cover the remaining top of the main body.
3. A gasket will be provided to seal the feed hopper's inspection door cover.

G. DISCHARGE PIPING
1. A 14 gauge (.075 inch) stainless steel discharge pipe will be fitted to the discharge end support leg to direct screenings into a customer provided receptacle. All discharge pipe flanges will be 304L stainless steel. Aluminum flanges will not be allowed.
2. The discharge pipe will be fitted with 10 watt per foot, self-regulating heating cable, 1-1/2 inch thick closed cell foam insulation, and a 0.08 inch thick polyethylene jacket. This option is for sites where a portion of the discharge pipe is exposed to below freezing ambient temperatures.

H. PIPE SUPPORTS
1. Pipe supports will be supplied by Parkson.

I. FASTENERS
1. All fasteners will be type 18-8 stainless steel.

J. FABRICATION
1. Weld size, type, and procedure will provide the necessary strength and facilitate the manufacturing of the specific component.

K. SURFACE FINISH

1. All stainless steel components will have standard mill finish and will be mechanically cleaned to remove weld discoloration and fabrication markings.
2. The screw and drive shaft will be finished with an enamel coating.
3. The motor and gear reducer will have the standard manufacturer's finish.

L. ELECTRICAL DEVICES AND CONTROLS
1. Electrical device interconnecting conduit and wiring will be the responsibility of the installing contractor. In addition to the drive motor, the following electrical devices will be furnished with the unit:
   a. SOLENOID VALVES
      1) Two (2) 120 volt, single phase, 60 Hz solenoid valves for the wash zone and flush spray washes housed in NEMA 4X enclosures will have 18-inch long integral leads and will have 1/2 inch NPT conduit connections.
   b. EMERGENCY STOP LOCAL PUSH BUTTON STATION
      1) A NEMA 4X polycarbonate emergency stop push button will be mounted to the end flange and will have a 1/2 inch NPT conduit connection.
   c. CONTROL PANEL
      1) See screen specification.

M. SEQUENCE OF OPERATION
1. HAND OPERATION.
   a. When HAND mode is selected, the screw will run continuously. When either spray wash HAND mode is selected, the spray wash will run continuously.
2. INTERMITTENT AUTOMATIC OPERATION.
   a. The control panel will be equipped to control the wash cycle, screw movement and flush cycle. Each wash or flush cycle and the screw movement will be controlled independently through the use of timers and counters. The drive motor and spray washes will be controlled automatically when the selector switches are placed in the AUTO position.
      1) The press motor starts after an adjustable accumulated run time from the interlocked feeding equipment. The press motor will have a staging timer where it will run for an adjustable length of time, typically set at 0.3 seconds.
      2) The press motor continues to run for an adjustable length of time (cycle on timer), typically set at 3-5 seconds. The press motor stops for an adjustable length of time (cycle off timer), typically set at 5 seconds. The wash solenoid valve opens and closes per the (wash cycle water duration timer) typically set at 8-10 seconds.
      3) Motor stop/start cycle repeats for an adjustable number of counts (wash cycle counter) typically set at 4-7.
      4) The press motor runs for an adjustable length of time (discharge timer), typically set at 13.5 seconds, to dewater and discharge the screenings.
      5) The flush solenoid opens for an adjustable length of time after the press motor stops (flush off delay), typically set at 10 seconds. The system will reset after the flush solenoid closes.
3. EMERGENCY STOP

a. The unit can be deactivated at any time by pressing either the control panel mounted or unit mounted Emergency Stop push buttons.

4. FAULT CONDITIONS

a. Motor overload or high motor current conditions will stop the motor and illuminate the fault light.

2.4 CONTRACTOR RESPONSIBILITIES

A. The Contractor will be responsible for reviewing the design of the equipment provided by the manufacturer, so that it fits properly in the structure and interfaces properly with associated equipment provided by others.

B. The Contractor will be responsible for receiving the equipment, unloading it from the common carrier, and storing it safely until it is ready to be installed.

C. The Contractor will install the manufacturer's equipment in accordance with the manufacturer's Installation, Operation and Maintenance instructions.

D. The Contractor will provide all field wiring between the electrical devices on the screen (motors, switches, valves, etc.) and the control panel. Contractor will also provide all required local disconnects and junction boxes.

E. The Contractor will provide all field piping, fittings, isolation valves, and components required to supply the necessary wash water to the spray system (as specified in Paragraph 1.8 A 5 a).

F. The Contractor will be responsible for providing and installing 1/2"-13UNC by 5-1/2" long type 304 stainless steel expansion anchor bolts for each unit.

PART 3 EXECUTION

3.1 INSPECTION AND STORAGE

A. The equipment will be shipped assembled and as much as possible (depending on size of unit, drives and supports may be shipped loose). The Contractor will be responsible for inspecting the equipment upon receipt of goods at the jobsite, unloading, and storing the equipment in a reasonable manner and protecting the motors, gearboxes, and controls from the weather in accordance with the Installation Operation and Maintenance manual.

3.2 INSTALLATION

A. The Contractor will install the equipment in the structure, according to the Contract Documents and the approved submittals provided by the manufacturer, following the instructions detailed in the Installation Operation and Maintenance manual.

B. Upon completion of installation by the Contractor and startup of the equipment by the manufacturer's field service representative, the equipment will be operated under the supervision of the Contractor for a minimum of eight (8) hours to ensure that all operating characteristics are within acceptable limits.

3.3 STARTUP AND FIELD SERVICE ASSISTANCE

A. See screen specification.

END OF SECTION

THIS PAGE INTENTIONALLY LEFT BLANK FOR DOUBLE SIDED PRINTING

SECTION 46_23_24

GRIT REMOVAL, WASHING & DEWATERING

PART 1 GENERAL

1.1 SUMMARY

A. The contractor shall furnish and install four (4) 360 PISTA® Model 7.08B with V-FORCE BAFFLE™ Grit Removal Systems in accordance with the drawings. Each PISTA® Grit Chamber shall be complete with the following equipment: gear motor, gear head, air bell, propeller drive tube, axial flow propeller, Gorman Rupp self-priming grit removal pump, grit washer, controls and auxiliary equipment as specified herein. All wetted parts shall be constructed of 316 stainless steel.
   1. Northside WWTP – two (2) systems
   2. Southside WWTP – two (2) systems

B. The PISTA® V-FORCE BAFFLE™ Grit Chamber shall operate on the vortex principle, and shall be capable of removing grit from raw waste or process water and depositing the grit in a storage hopper. No moving parts subject to wear or stoppage shall be below the water surface. An integral grit transporting means shall be provided to transport the grit from the storage hopper to the disposal means. To minimize the possibility of clogging, all internal openings in the piping to the grit pumping device as well as the grit pumping device shall be large enough to pass a 3" sphere. No bends or elbows will be allowed in the piping on the suction side of the grit pump. All drives, lubrication and bearings shall be readily accessible from walkways above the operating water level. To minimize the possibility of organic capture, the floor of the grit separation chamber shall be flat and there shall be no greater than a 3" opening for grit to pass through to the storage hopper. Sloping floors in the upper chamber will not be allowed due to reduced grit removal efficiency and extra construction costs. The PISTA® V-FORCE BAFFLE™ Grit Chamber shall be manufactured by Smith & Loveless®, Inc., Lenexa, Kansas.

C. An influent baffle and inlet coanda ramp shall be provided to enhance the coanda effect and direct the grit downward to the bottom of the separation chamber as well as enhance chamber flow patterns.

D. All listed iron and steel products used in this project must be produced in the United States. The term "iron and steel products" means the following products made primarily of iron or steel: lined or unlined pipes and fittings, manhole covers and other municipal castings, hydrants, tanks, flanges, pipe clamps and restraints, valves, structural steel, reinforced precast concrete, and construction materials. The deminimis and minor components waiver apply to this contract for minor components.

1.2 RELATED SECTIONS

A. Section 01_00_01 Basic Requirements

B. Section 01_33_01 General Submittal Requirements

C. Section 01_33_02 Pre-bid Equipment Submittal Requirements

D. The Contract Documents are a complete unit and complementary to each other. The individual Specification sections and other Contract Documents do not contain all cross references to "related work" or "related sections." It is the Contractor's responsibility to review the complete Contract Documents in order to properly scope, schedule and coordinate the work of any/all subcontractors, suppliers, and others on this project. Anything called out in one location of the Contract Documents is binding as if it were called out in all sections of the Contract Documents.

1.3 SUBMITTALS

A. Submittals for products and miscellaneous items in this specification section shall be submitted in accordance with Section 01_33_01 General Submittal Requirements and related submittal sections and provisions of the Contract Documents and include at least the following:

1. Complete catalog information, descriptive literature, specifications, and complete parts list with identification of materials of construction.
2. Installation instructions (assembly, alignment, and adjustment procedures).
3. Total weight of the equipment including the weight of the single largest item for each equipment assembly
4. Certified structural, mechanical, and electrical drawings showing important details of construction, equipment dimensions, size, anchor bolt locations, and locations of external utility piping and electrical connections and requirements.
5. Motor data including material of construction, dimensions, rpm at full load, frequency, voltage, full load current, code and design letter, efficiency, horsepower, number of phases, time rating, temperature rise, service factor and bearing life rating. Include motor manufacturer's recommended lubrication requirements.
6. Power and control wiring diagrams including terminals and numbers.
7. Shop painting systems including specifications to indicate compliance with Contract Documents.
8. Factory test report of inspection.
9. Full-scale test data demonstrating the performance and grit removal efficiency of the equipment furnished under this section. Data from a full-scale test previously performed for a unit in a similar installation will be acceptable.
10. Special shipping, storage and protection, and handling instructions.
11. A list of manufacturer's recommended replacement parts required to maintain the equipment for a period of one year, with current price information.
12. A list of special tools, materials, and supplies furnished with the equipment for use prior to and during startup, and for future maintenance.

B. Submit Operation and Maintenance Manuals.

C. Submit an Equipment Warranty and Certification

1.4 QUALITY ASSURANCE

A. Qualifications

1. The specifications and drawings detail Smith & Loveless equipment and represent the minimum standard of quality for both equipment and materials of construction. The contractor shall prepare his bid on the basis of this equipment for the purpose of determining the low bid without consideration of a possible substitute. A single

manufacturer shall furnish all the equipment specified under this Section (with exception of Grit Pump which shall be supplied by Gorman Rupp), and shall be standard units of proven ability as manufactured by a competent organization that is fully experienced, reputable and qualified in the manufacture of the equipment to be furnished. The manufacturer shall have a minimum of 10 years of successful experience and 50 installations in the design, construction and operation of the equipment specified herein.

2. All equipment furnished under this Section shall be new and unused and shall be the standard products of the manufacturer.
3. Five (5) grit removal efficiency tests shall be provided from installations where similar equipment by the Manufacturer is currently in similar service. Each grit removal efficiency test shall meet the removal efficiency in 1.05.A. Manufacturers that do not have test data acceptable to the Engineer shall not be considered as an approved equal, or will be required to provide grit testing of the installed equipment, with test results that meet 1.05.A.
4. Manufacturer shall have an operational grit removal system with a minimum 4.0 MGD capacity at their facility, and upon request from the Engineer, the operational unit may be witnessed by the Engineer and/or representative of their choice.
5. These Specifications are intended to give a general description of what is required, but do not cover all details which may vary in accordance with the exact requirements of the equipment as offered. They are, however, intended to cover the furnishing, delivery, installation, field testing and field calibration of all materials and apparatus as required. Any additional equipment necessary for the proper operation of the proposed installation not specifically mentioned in these Specifications or shown on the Drawings shall be furnished and installed at no change in Contract Price or Time.

1.5 CONDITIONS OF OPERATION

A. The grit removal device shall be capable of removing the following at the rated hydraulic peak flow rate, with no decrease in efficiency will be allowed at flows less than this design rate.
   1. 95% of the grit down to 140-mesh (105 microns) in particle size.

B. Each PISTA® 360™ Grit Chamber with V-FORCE BAFFLE™ shall handle all flows equal to, or less than, a hydraulic peak flow of 5.3 MGD. The influent flume, transporting the liquid waste to the grit chamber, shall be of the size and shape shown on the contract drawings to assure that grit does not settle in the inlet flume and to provide for proper operation of the grit chamber. The effluent flume shall be a free-flowing flume for maintaining proper velocity within the chamber.

C. The flow in the chamber shall travel a full 360° rotation through the inlet and outlet, providing maximum travel for effective grit removal.

D. Before the bid, any alternate grit removal system manufacturer shall submit to the consulting engineer, performance test data from ten (10) currently operating installations showing through previous certified tests the stated grit removal efficiency of 95% down to 140-mesh (105 microns) in particle size. The stated performance must be proven in full scale field testing utilizing certified grit removal efficiency test procedures as performed by qualified factory payroll personnel who have at least one (1) year experience performing the test.

E. To maximize grit removal efficiency, the grit chamber hydraulics shall incorporate a toroidal flow path enhanced by a slow vortex. Grit chambers incorporating the gravity principle will not be acceptable due to the turbulence in the flow, which prevents gravity settling from being effective and due to the extra area needed for settling fine grit. Aerated grit chambers, including those incorporating conventional settling criteria, are also specifically unacceptable.

F. To ensure the efficient transport of the grit and simultaneous lifting and discharge of the organic material, the bottom of the upper chamber covering the storage hopper shall be constructed of structural grade 316 stainless steel plate, free from rotation and shall be flat.

G. The grit moving across the bottom of the grit chamber shall be hydraulically scoured as the propeller blades, moving within 6" of the grit, pass over the moving grit and cause hydraulic currents to lift up the organics. The grit scouring intensity shall be adjustable. Propellers running with a center line greater than 8" from the bottom of the chamber will not be acceptable. The grit shall pass from the removal chamber through an opening in the transition plate and drop into a grit storage hopper.

H. The PISTA® 360™ Grit Chamber shall be equipped with the V-FORCE BAFFLE™, which is an integral flow control baffle for both the inlet and outlet of the main chamber. The V-FORCE BAFFLE™ shall be designed to direct the inlet flow into the chamber in a manner ensuring the proper vortex flow and to prevent short-circuiting. The V-FORCE BAFFLE™ on the outlet shall direct the flow out of the unit, and to act as a "slice weir" to control the water level in the main chamber and in the inlet channel. No additional downstream flow control device shall be required to keep the velocity between 3.5 fps at peak flow and 1.6 fps at minimum flow with a 10:1 turn down. The V-FORCE BAFFLE™ shall be 316 stainless steel. The installing contractor shall attach the V-FORCE BAFFLE™ to the concrete structure using 5/8" anchor bolts, as shown on the drawings.

1.6 WARRANTY

A. The manufacturer shall warrant the equipment to be of quality construction, free from defects in materials and workmanship. The warranty shall become effective upon acceptance of the project by the Owner (after completion of final inspection.)

B. The equipment, apparatus, and parts furnished shall be warranted from a period of one (1) year from final acceptance by Owner, excepting only those items that are normally consumed in service, such as oil, grease, gaskets, o-rings, etc. The manufacturer shall be solely responsible for the warranty of the equipment and all components.

C. Upon request from the Engineer and/or the Owner, the manufacturer shall demonstrate proof of financial responsibility with respect to performance and delivery date. In addition, the manufacturer shall provide proof of evidence of facilities, equipment, and skills required to produce the equipment specified herein and provide technical service and replacement parts.

D. Components failing to perform as specified by the Engineer, or as represented by the manufacturer, or proven defective in service during the warranty period, shall be replaced, repaired, or satisfactorily modified by the manufacturer without cost of kind to the Owner.

E. It is not intended the manufacturer assume liability for consequential damages or contingent liabilities arising out of failure of any product or parts thereof to operate properly, however caused by or resulting from or arising out of defects in design or manufacture, delays in delivery, replacement, or otherwise.

PART 2 PRODUCTS

2.1 MECHANICAL DRIVE

A. The PISTA® Grit Removal Unit shall have an axial flow propeller connected by a drive tube through gearing to a 3-phase, 60cycle, 460 volt, totally enclosed helical gear motor. The minimum rated horsepower of the motor shall be 1.0 HP.

B. The drive tube shall be driven by a large, totally enclosed combination spur gear and turntable bearing. The maximum output speed of the drive shall be 21 RPM. Pinions and gears shall be high quality steel, machined and hardened for high strength and long wear. Propeller blades shall be tapered, with generously rounded leading edge, to reduce energy consumption and prevent foreign material from fouling the propeller.

C. A pinion mounted on the output shaft of the helical gear motor shall drive a large spur tooth bull gear enclosed in a heavy cast-iron case. The spur gear pinion shall be cut from heat-treated steel. The bull gear shall rotate with a minimum 21" diameter turntable bearing for durability and stability. The pinion and bull gear shall have a service factor of 5.0 or greater at standard operating speeds.

D. All bearings of the drive unit, including the motor, shall have a minimum B 10 bearing life of 100,000 hours, except for the 21"diameter turntable bearing supporting the propeller assembly which shall have a minimum B 10 life of 20 years.

E. The bull gearbox shall be specifically designed for this service. It shall have an opening for the 10-3/4" diameter torque tube driving the propeller. The gearbox shall be sealed and the bottom opening shall have an air bell around the torque tube to prevent water from entering the gearbox in case of flooding. The top of the gearbox shall have a bolted flanged connection for the grit discharge pipe. Clarifier drives, which are modified to meet the higher propeller speed, specifically will not be acceptable. The drive motor shall have normal starting torque and low starting current. The motor shall not be overloaded beyond the nameplate rating under any normal conditions encountered.

2.2 PISTA® GRIT FLUIDIZER™

A. The PISTA® Grit Collection System shall be equipped with PISTA® Grit FLUIDIZER™ vanes. The PISTA® Grit FLUIDIZER™ vanes shall be located within 6" of the elevation of the pump suction inlet. The PISTA® Grit FLUIDIZER™ vanes shall be bolted to the propeller drive tube in a helical fashion so as to gently pump the grit upward and keep the grit fluidized at the grit pump suction inlet.

B. The PISTA® Grit FLUIDIZER™ vanes shall be fabricated of the same material as the drive tube. The PISTA® Grit FLUIDIZER™ vanes shall be bolted to the drive tube to facilitate easy removal of the drive tube.

C. The PISTA® Grit FLUIDIZER™ shall be a helical pump that provides two (2) functions.
   1. One, the PISTA® Grit FLUIDIZER™ vanes shall continuously pump the grit upward at the center of the PISTA® Grit Collection Chamber. This gentle pumping action shall prevent the grit from packing down around the pump suction pipe. The fluidizing action shall prevent grit that has a sticky or greasy consistency from packing together to the point where the pull of water created by the pump might not break it loose. The PISTA® Grit FLUIDIZER™ vanes shall keep the grit fluidized at the suction inlet so packing cannot occur.
   2. Second, the upward pumping action of the PISTA® Grit FLUIDIZER™ vanes shall enhance the performance of the propeller in keeping organics in suspension. This shall cause the heavier grit to fall downward through the gently circulating water, and enable the organics to be more readily swept away by the currents induced by the PISTA® propeller.

2.3 GRIT STORAGE HOPPER

A. A grit storage hopper with a 60° sloped bottom shall be provided. The effective storage volume shall be 35 cubic feet. To prevent squatty storage chambers the maximum diameter shall be 3'- 0". The minimum depth shall be 5'-6". This is to allow for adequate volume for grit pile expansion if backwashing is performed plus allow adequate storage to prevent excessive numbers of grit removal cycles and grit handling equipment wear. As an integral part of the equipment installation, the Manufacturer shall supply a floor plate to cover the storage hopper. The plate shall consist of two (2) sections with lifting slots to allow access to the storage area. Attaching this plate as part of the rotating assembly will not be allowed.

2.4 GORMAN RUPP GRIT PUMP – TOP MOUNTED

A. Supply Gorman Rupp self-priming grit pump w/ casing heater designed to accommodate Pista Grit system per Drawings and manufacturer's requirements.

2.5 PLC ELECTRICAL CONTROLS FOR AUTOMATIC GRIT REMOVAL

A. The grit system control equipment shall be mounted in a NEMA Type 4X 316 stainless steel enclosure with hinged, lockable doors.

B. All components within the control panel shall be UL listed or recognized, and the complete grit system control panel itself shall be labeled as a UL 508A General Use Industrial Control Panel.

C. To facilitate wire tracing and servicing, the control wiring shall be run in enclosed wireways, with removable covers, rather than tied up in bundles. All switches and components shall be labeled and a coded wiring diagram shall be provided.

D. Control relays up to 6-amp capacity shall be the modular, plug-in type, with integral LED indicating lights to show activation. Larger control relays shall be enclosed to be "finger safe".

E. A duplex GFI protected convenience outlet shall be provided in the panel for operation of 120-volt AC devices.

F. Thermal magnetic air circuit breakers shall be provided for branch disconnect service and short-circuit protection of all auxiliary circuits, and thermal magnetic circuit breakers with lockout capability shall be provided for each drive and pump motor, matched to the motor inrush current.

G. A NEMA 1 rated, reversing, magnetic across the line starter with overload coils for each phase shall be provided for the PISTA□ TURBO™ Grit Washer Drive Motor.

H. Magnetic across-the-line starters with 24-volt coils and solid-state overload protection for each phase shall be provided for each motor to give positive protection against phase unbalance, thermal overload, phase loss and ground fault. To provide the fastest trip speed and for ground fault protection, only solid-state overload protection will be used, and motor starters using heater coils will not be acceptable. Each single-phase auxiliary motor shall be equipped with an over-current protection device in addition to the branch circuit breaker, or shall be impedance protected. Circuit breakers shall be used in lieu of fuses, to eliminate the need for stocking spare fuses. All switches shall be labeled and a coded wiring diagram shall be provided.

I. Individual NEMA 4 oil-tight Hand-Off-Automatic selector switches shall be provided for the pump and dewatering device drives.

J. An On Off selector switch shall be provided to operate the propeller drive motor starter.

K. To control the operation of the grit removal and dewatering system, and monitor the control, environmental and alarm functions, a specially preprogrammed, dedicated microprocessor-based control system shall be provided. The controller shall interface with the panel display unit, motor starters, flush water, accessories and alarm functions through digital and analog input and output ports as required. The digital controls shall operate on 24 volts or less, to eliminate shock hazard.

L. The Programmable Logic Controller shall have a 20k-Hz high-speed counter and 6K-word non-volatile memory (4K-word maximum program and 2K-word maximum data) and use RSLogic programming software. It shall have 14 inputs and 10 outputs and a built-in RS-232-C port for external interfacing. A real-time clock module shall control scheduling of the grit washing and discharge cycles

M. The 24-volt DC power supply shall be overload protected to be "crowbar safe" and will return to operation when a short is removed. Program integrity shall be maintained by battery-backed RAM. A surge suppressor with power filter shall be provided for the control circuits.

N. A properly sized insulating-type control transformer shall be provided by the controls Manufacturer to supply power for controls and auxiliary devices necessary to semi-automatic operation. The control transformer shall have volt AC primary, 120-volt AC secondary, Class F insulation; with temperature rise not to exceed 115°C above a 40°C ambient.

O. A NEMA 4 rated display unit shall be mounted through the front of the panel to provide operator input to and visual output from the microprocessor controller. This interface shall be a 5.7" (145 mm) graphic interface with DSTN 256-color Liquid Crystal Display with

backlighting and resistive-type touch screen, with audible feedback on touch, for data input and programming. The display shall have a "sleep" feature to prolong screen life.

P. An aluminum hood to shade the HMI display from direct sunlight shall be mounted on the face of the control panel. The metal shade shall cover the entire display, shield the top and sides of the display, and shall be hinged to fold over the display and stow against the front of the panel.
   1. Display Functions:
      a. "Run – Off" indication for drives and pump.
      b. Grit removal cycle time settings and indication of remaining run time.
      c. Set time intervals for pump run time, prime fail alarm, dewatering device run time.
      d. View current status.
      e. Alarm list/status and diagnostics.
      f. Lubrication notification on paddle drive, grit pump, and grit dewatering equipment motor.

Q. Provisions shall be made to allow interfacing the grit system PLC with a Customer supplied SCADA system, using an Ethernet IP connection.

R. The PLC controller shall provide the necessary control functions to properly operate the PISTA☐ TURBO™ Grit Washer through its various cycles and to control the operation of the air infusion, grit wash water, spray water and organic drain solenoid valves, in proper sequence, taking input from the liquid and grit level detectors and the grit pump "run" signal. It shall provide the necessary output signals, interlock and timing functions, as programmed.

S. Grit washing shall begin when the grit pump starts and begins delivering the recovered grit slurry to the PISTA☐ TURBO™ Grit Washer or after a pre-programmed time interval from the completion of the last cycle. This shall initiate spray washing, multiple agitation cycles, air infusion and drain-refill cycles, all field-adjustable for optimum organics removal.

T. The grit discharge sequence shall be initiated by a sonic grit level sensor which is actuated when the collected grit reaches a predetermined level in the main wash chamber. The discharge cycle shall include grit agitation, washing and ejection, and shall be field adjustable for maximum efficiency.

U. To control the operation of the grit pump, a manual Hand-Off-Automatic selector switch shall be provided. In the Automatic position, control shall be from the PLC program, with a manual push button to override the timed program and initiate a pumping cycle. A manual push button shall also be provided to reset the grit removal cycle. The program shall be capable of initiating grit pumping cycles at adjustable intervals throughout the day. The pumping cycle and dewatering device cycle lengths shall also be programmable.

V. All necessary capacitors, relays, diodes, etc., shall be provided as shown on the schematic diagram. In order to ensure continuity of operation, the Manufacturer of the PISTA® Grit Chamber shall provide these controls, and the full opening pneumatically controlled pinch valve for installation on the grit discharge line as shown on the drawings.

2.6 PNEUMATICALLY CONTROLLED DISCHARGE PINCH VALVE

A. A pneumatically controlled discharge pinch valve shall be furnished for installation in the vertical discharge piping run, and the controls shall be located in the vacuum priming control panel. The controls shall include an oil-less air compressor and solenoid valve. The operation of the discharge pinch valve shall be tied into the cycle timer and the SONIC START☐ level sensor, so as to be fully automatic.

2.7 PISTA® GRIT CONCENTRATOR – 250 GPM

A. The second stage PISTA® 250 GPM Grit Concentrator shall be provided as shown on the drawings for secondary treatment of organics and secondary grit dewatering. The PISTA® 250 GPM Grit Concentrator shall operate on the constant rate vortex principle. Design shall be such that a small volume of water and the grit will discharge at the bottom for final dewatering and ultimate disposal of the grit.

B. As a minimum, 93 to 94 percent of the water pumped to the PISTA® 250 GPM Grit Concentrator and 95 to 96 percent of the residual organic material shall flow out the top and be returned to the inlet channel to the PISTA® Grit Chamber. The unit shall be capable of intermittent operation with minimal variation in removal efficiency. There shall be less than 5% putrescible material in the recovered grit from the underflow.

C. The 2-piece 250 GPM PISTA® Grit Concentrator™ shall be constructed of a Ni-Hard top section, with a minimum thickness of ½" in high wear areas, and a bottom cone constructed of the same material, with a minimum thickness of ¾", and which shall be readily replacable. Inlet and outlet connections shall be as shown on the drawings. The 250 GPM PISTA® Grit Concentrator™ shall be provided by the Manufacturer of the PISTA® GRIT CHAMBER™, for installation by the contractor. The operating range shall be compatible with the total PISTA® GRIT REMOVAL SYSTEM™ as described herein.

2.8 MODEL 250 PISTA® TURBO™ GRIT WASHER WITH PARALLEL PLATE SEPARATOR

A. The PISTA® TURBO™ Grit Washer shall have 3 wash levels: High air scour, intense flushing with water and thorough agitation. The high air scour and intense flushing with water shall occur in the inlet hopper of the grit washer. The flights on the screw shall be specially designed to further clean the grit through additional agitation, dewater the grit and dispose of the cleaned, dewatered grit.

B. The PISTA® TURBO™ Grit Washer device shall be capable of the following conditions of operation when operated at the specified rate of grit input and hydraulic peak flow rate, and proceeded by a ¼" or less screen.
1. Organic Removal: Less than or equal to 5% putrescible material remaining in the washed grit.
2. Water Content: Less than or equal to 10% in the washed grit and capable of passing a "Paint Filter" test.
3. Retention of Grit: 95% of Grit > 140 mesh (106 microns) in particle size, removed by the PISTA® TURBO™ Grit Washer.
4. Maximum Grit Slurry Feed Rate
   a. Model 250: 250 – 275 GPM
5. Capacity
   a. Model 250 – 41 ft3/hr. 2.47 tons/hr.

6. Piping Connections
   a. Model 250: 4" inlet to PISTA® Grit Concentrator – plain end
   b. 4" overflow – flanged hopper
   c. 6" overflow – flanged PISTA® Grit Concentrator
   d. 3" organic drain – threaded
   e. 2" NPT drain (2 typ.)
   f. 1" NPT water connection
   g. ¼" NPT air connection

C. FLUSH WATER REQUIREMENTS: 20 GPM @ 60 psi. Intermittent. To aid in organics separation.

D. AIR REQUIREMENTS: 5 SCFH @ 70 psi. Intermittent. To aid in organics separation.
   1. The air requirement shall be provided by an air compressor package in a NEMA 4 enclosure, consisting of a 1/3 hp 1/60/115v oil-less motor-compressor unit with intake filter/silencer and a 2-gallon air storage tank with pressure switch, regulator and associated piping. The compressor shall have permanently lubricated bearings, stainless steel valves and lightweight aluminum construction. The air storage tank shall have a pressure gauge and safety relief valve.

E. The PISTA® TURBO™ Grit Washer shall be constructed of 316 stainless steel, including the screw. The inlet hopper receives the mixture of water and grit, and shall be equipped with an energy dissipation zone to prevent turbulence in the remaining portion of the hopper. The hopper shall have parallel plates located in the settling zone to improve retention of the fine grit. An overflow weir trough shall be provided to return the water to the system. The conveyor shall be freestanding with support legs to hold the conveyor at an angle of approximately 22°. The discharge shall be 8" diameter, plain-end pipe. The drive assembly shall be located at the discharge end.

F. The PISTA® TURBO™ Grit Washer shall have an open, 3/16" thick steel U trough. The screw shall be 9" in diameter with mixer PISTA® Grit Fluidizing Vanes in the inlet hopper and shall have a continuous shaft design off the flight segment. The conveyor shall be 15' in length, with overall dimensions as shown on the drawing. The hopper shall have a full-width outlet weir trough to minimize the carryover of the fine grit. The projected separator plate settling area shall be a minimum of 17.0 square feet.

G. The screw shall run on anti friction bearings at the outlet end, and a bronze bushing at the inlet end. The inlet end shaft bushing shall be capable of being greased. The inlet end shall have two 2" drains. Clearance between the legs and the discharge outlet shall be as shown on the drawing.

H. The drive to the PISTA® TURBO™ Grit Washer shall be a parallel shaft, direct drive, 3-stage, high efficiency, single case, shaft-mounted helical gear reducer. The motor shall be 3 HP, 1760 RPM, TEFC 3-phase, 60 cycle, 460 volt with a 1.0 Service Factor. The screw speed shall be 10 RPM. The drive shall be mounted on a plate at the discharge end and the plate shall be bolted to the flanges on the trough.

I. A 1/8" (3 mm) thick expanded metal-flattened mesh (micron) cover, matching the construction of the PISTA® TURBO™ Grit Washer, shall be provided over the hopper and trough openings, as shown on the drawings.

J. All structural stainless steel shall be thoroughly cleaned and then blasted for a uniform finish. The blasted surfaces shall then be protected by the application of a low viscosity oil with penetrating, lubricating and corrosion resistance properties.

K. All carbon steel surfaces shall be cleaned and coated with 6-8 mils dry film thickness of VERSAPOX® epoxy coating, Factory-applied prior to shipment.

L. STANDARD ACCESSORIES

1. LUBRICATOR. The PISTA® TURBO™ Grit Washer shall be provided with automatic spring-loaded lubricator, which employs the movement of the bearings to pull grease from a refillable reservoir to the bearing surface. The reservoir and base shall be constructed of clear polycarbonate, to allow for visual inspection and monitoring of the grease supply. The lubricator shall have a thread size of 1/8" NPT, a grease storage capacity of 6 oz. and have a minimum size of 3" diameter x 6" tall. The operating temperature range shall be from -10°F (23°C) to 250°F (121°C).
2. FLOWMETER. The flow rate of the wash water shall be controlled by a manual valve and measured by a flowmeter. The variable flowmeter shall be constructed with a tough machined acrylic meter body, highly polished to a clear finish with a direct reading permanent scale. The float and guide rod shall be constructed of 316 stainless steel. The F/NPT adapters shall be constructed with high-grade Vitron O-ring seals and aluminum stress ring thread supports. The flowmeter shall be capable of usage in direct sunlight.
3. ROTOMETER. The flow rate of the scouring air shall be controlled by a manual valve and measured by a rotometer. The low flow rotometer shall have body constructed of one-piece welded 316 stainless steel with a clear, polycarbonate plastic tube shield and Borosilicate glass tube. The float shall be constructed of 316 stainless steel. The FNPT adapters shall be constructed with high grade Buna-N O-Ring seals.
4. GRIT LEVEL SENSOR. A sonic level limit switch with direct contact probe shall send a signal to the controller to begin the grit discharge cycle, in response to the level of the grit in the grit hopper. This switch shall not be affected by external vibration. It shall actuate a dedicated DPDT DC relay in the PISTA® TURBO™ Grit Washer control panel. The electronic enclosure of the switch shall be NEMA 4X. The probe shall be constructed of 316 stainless steel with a 1-1/2" NPT mounting connection.

M. HEAT TRACING

1. All flushing and spray water lines on the PISTA TURBO™ Grit Washer shall be provided with thermostatically controlled electrical heat tracing and insulated for cold weather protection.

PART 3 EXECUTION

3.1 MANUFACTURING QUALITY

A. The specified Manufacturer markets, designs, fabricates and manufactures the grit chamber equipment at its own U. S. facility. The Manufacturer shall have on staff registered engineers, both in process and design. This would be for providing current capabilities in these areas as well as future capabilities after the equipment is installed and

operating, for the best long term interest of the Owner. Alternate manufacturers will be required to show that they meet these criteria also.

3.2 INSTALLATION AND OPERATING INSTRUCTIONS

A. Installation and operation shall be in accordance with instructions provided by the Manufacturer.

3.3 START-UP

A. The Manufacturer shall provide the services of a Factory-trained representative for a maximum period of three (3) days on-site to assist with the initial startup, and to instruct the Owner's operating personnel in the operation and maintenance of the equipment.

END OF SECTION

SECTION 46_33_33

POLYMER BLENDING AND FEED SYSTEM

PART 1 GENERAL

1.1 SUMMARY

A. The polymer system shall be the standard equipment of the supplier involved in the manufacture of similar type equipment
   1. Northside – 2 units, complete
      a. Review and match required capacity of Belt Filter Press, minimum
      b. Prominent PROMIX Model M_0-1200X2-10.3DA
      c. Tote w/ listed accessories
   2. Spare Parts
      a. Two (2) replacement neat polymer Delta Series pumps w/ duplicate set of all required components for complete replacement/changeout of pumps
      b. One (1) replacement 1 HP Mixer Motor w/ duplicate set of all required components for complete replacement/changeout of motor
      c. One (1) replacement tote mixer, complete

B. Equipment included with the polymer system includes:
   1. Non-Mechanical/Mechanical Multi-stage Polymer Activation & Blending Chamber.
   2. Dilution water controls
   3. Neat polymer pump
   4. System Controls

C. The polymer system shall be a skid mounted system with interconnecting piping and wiring complete within skid limits.

D. Supplier / manufacturer to review and match requirements of Belt Filter Press. Those requirements supercede any conflicting information provided herein (including pump sizing.)

E. All listed iron and steel products used in this project must be produced in the United States. The term "iron and steel products" means the following products made primarily of iron or steel: lined or unlined pipes and fittings, manhole covers and other municipal castings, hydrants, tanks, flanges, pipe clamps and restraints, valves, structural steel, reinforced precast concrete, and construction materials. The deminimis and minor components waiver apply to this contract for minor components.

1.2 RELATED SECTIONS

A. Section 01_00_01 Basic Requirements

B. Section 01_33_01 General Submittal Requirements

C. Section 01_33_02 Pre-bid Equipment Submittal Requirements

D. The Contract Documents are a complete unit and complementary to each other. The individual Specification sections and other Contract Documents do not contain all cross references to "related work" or "related sections." It is the Contractor's responsibility to review the complete Contract Documents in order to properly scope, schedule and coordinate the work of any/all subcontractors, suppliers, and others on this project. Anything called out in one location of the Contract Documents is binding as if it were called out in all sections of the Contract Documents.

1.3 SUBMITTALS

A. Submittals for products and miscellaneous items in this specification section shall be submitted in accordance with Section 01_33_01 General Submittal Requirements and related submittal sections and provisions of the Contract Documents.

1.4 REFERENCES

A. The Contractor and/or Manufacturer shall follow the standards listed below, except as otherwise specified herein. The latest revision or edition in effect at the time of bid opening shall be utilized.

1.5 DELIVERY, STORAGE & HANDLING

A. Individual equipment components shall be crated in structurally adequate packing containers to prevent damage during shipping, facilitate ease of handling and to provide suitable protection from weather for extended at the jobsite prior to installation. Packing containers shall be permanently labeled with appropriate equipment identification, shipping address and return address, and weight. Packing list shall be provided with equipment at time of delivery.

B. Any electrical equipment shall be kept thoroughly dry at all times and stored indoors. Equipment storage shall be protected and maintained in accordance with the Manufacturer's recommendations. Equipment shall not be stored directly on the ground.

C. Contractor shall utilize equipment and tools of adequate size suitable for unloading, transporting, storing and supporting the equipment during installation. Caution shall be employed to prevent equipment damage resulting from abrupt contact with other materials or equipment.

1.6 WARRANTY

A. The manufacturer shall warrant the equipment to be of quality construction, free from defects in materials and workmanship. The warranty shall become effective upon acceptance of the project by the Owner (after completion of final inspection.)

B. The equipment, apparatus, and parts furnished shall be warranted from a period of one (1) year, excepting only those items that are normally consumed in service, such as oil, grease, gaskets, o-rings, etc. The manufacturer shall be solely responsible for the warranty of the equipment and all components.

C. Upon request from the Engineer and/or the Owner, the manufacturer shall demonstrate proof of financial responsibility with respect to performance and delivery date. In addition,

the manufacturer shall provide proof of evidence of facilities, equipment, and skills required to produce the equipment specified herein and provide technical service and replacement parts.

D. Components failing to perform as specified by the Engineer, or as represented by the manufacturer, or proven defective in service during the warranty period, shall be replaced, repaired, or satisfactorily modified by the manufacturer without cost of kind to the Owner.

E. It is not intended the manufacturer assume liability for consequential damages or contingent liabilities arising out of failure of any product or parts thereof to operate properly, however caused by or resulting from or arising out of defects in design or manufacture, delays in delivery, replacement, or otherwise.

PART 2 PRODUCTS

2.1 SYSTEM DESCRIPTION

A. Polymer Activation & Blending Chamber.

1. These specifications are based on a multi-stage, multi-zone, Hydro-Mechanical polymer activation and blending technologies. Alternate technologies will only be considered if proven to provide an equal level of performance, versatility, reliability and quality, otherwise the following technology will be provided without exception.
2. In order to provide control and versatility to optimize the performance of the wide range of polymers the following available and to optimize system reliability, a multi-stage Hydro-Mechanical polymer blending technology shall be provided with both a non-mechanical and mechanical mixing stage.
3. Non-Mechanical Stage: To optimize reliability, the device shall be capable of activating and blending polymer based on plant water pressure alone at 30 psi or greater. Polymer shall be injected directly into a water jet by means of an injection quill positioned such that the non-mechanical mixing energy is no way diminished such that the velocity of the mixing energy-producing water jet is maintained or increases as flow decreases.
4. The Hydro-Mechanical mixing stage: In order to provide optimal polymer performance under all operating conditions and to provide total control over mixing energy. In addition to the non-mechanical mixing stage the device shall be capable of producing its mixing energy independent of plant water pressure through a variable intensity, controllable stainless steel hydro-mechanical mixer. The mixing impeller shall be fully controllable and capable of inducing ultra-high, non-damaging mixing energy at all flow rates. This shall be accomplished by controlling mixing intensity and preventing over exposure to, or damaging recirculation through the impeller. The polymer mixing impeller shall be designed to produce both axial and radial flow to optimize mixing effectiveness and to effectively inducing high, non-damaging mixing energy over the systems full range. Mixers that rely solely on plant water pressure and or flow for mixing energy will not be acceptable. Mixers where performance is affected by the flow rate and therefore retention time resulting in under or over exposure to mixing energy, or which rely on constant speed impellers or that rely on close tolerances for blending shall not be acceptable.
5. In order to prevent polymer build-up, the mixing chamber shall maintain high velocity in the entire chamber – at no time shall there be low velocity within any

portion of the mixing chamber. The mixing impeller shall be controlled by a SCR motor controller and driven by a wash-down motor. The motor should be mounted horizontally or above the mixing chamber. Motors mounted under the mixing chamber where seal failure or leaks can damage the motor shall not be acceptable. The mixer drive shaft shall be sealed by a mechanical seal which integrally mounted and factory plumbed seal flush. A drain port behind the seal shaft shall be provided in the mixing chamber in the mixing chamber to drain the polymer solution in case of a seal failure. The seal shall be easily accessible for replacement. Systems without a seal flushing system shall not be considered. All bearings shall be external form the mixing chamber. Internal bearings shall not be acceptable.

6. Both mechanical and non-mechanical mixing zones shall be clear polycarbonate to view the mixing action and blending effectiveness. Acrylic chambers prone to becoming brittle over time cracking, or opaque pipe shall not be acceptable to meet this requirement. The mixing chamber shall have a maximum rated pressure of 100 psi. Provide a pressure relief on the mixing chamber factory set at 75 psi. Provide a neat polymer check valve specifically designed to isolate neat polymer from dilution water. The valve shall be designed with an open, unobstructed path to the valve seat. To minimize check valve plugging due to normally occurring polymer agglomerations, the minimum open area up to and including the valve seat shall be 3/16" without exception. The valve body shall be constructed of Teflon and Viton seats. The valve poppet and spring shall be shall be stainless steel. The spring shall be outside the of the polymer flow path to prevent plugging. The locking pin used to hold the valve in place shall be attached to the mixing chamber with lanyard. The valve shall be readily accessible for cleaning and shall not require tools for removal, cleaning or replacement. Conventional check valves, valves that rely on ball seats, and or check valve that are installed inside the mixing chamber, or which require mixing chamber disassembly for service will not be accepted.

B. Dilution Water Control

1. The Dilution water flow rate shall be monitored by a Rotameter paddle type flow meter having the range as specified. Unions and flanged shall be provided on the flow meter to allow easy removal for cleaning. The unit shall have an electric motor operated ball solenoid valve for on/off control of total dilution water flow. The unit shall have a linear actuated variable rate control valve to automatically proportion water flow to polymer

C. Pump

1. Unit shall have a neat polymer metering pump.
   a. Diaphragm Metering Pump
      1) The polymer pump shall be a microprocessor controlled solenoid driven diaphragm metering pump. All pump functions shall be accessible via an illuminated LCD screen and a membrane style keypad.
      2) The pump shall be programmable so that the stroking speeds can be modified to accommodate various polymer viscosities.
      3) Polymer pump shall accept a 4-20mA signal for speed control. Pump will also accept a 0-10 VDC or pulse input for speed control.
      4) The pump shall be equipped with a fault annunciating relay which will be monitored by the system controller.

5) The pump shall supply a Pump Running feedback signal which will be monitored by the system controller.
6) In the case of a diaphragm pump installation the system shall have the provision to mount the neat polymer pump in either a flooded suction or suction lift configuration depending on the application requirements.

b. Provide a calibration column with two full port PVC ball valves having a Viton o-rings. The column shall be calibrated for a one minute draw-down and read in GPH and milliliters. The calibration column shall be rigidly mounted to the skid frame with a minimum of two heavy duty brackets. Mounting the calibration to the neat polymer inlet piping shall not be accepted. Provide a pressure relief on the discharge of the metering pump, adjustable between 25 to 100 psi. The valve factory plumbed to the suction of the pump. The valve shall have a stainless steel or PVC body with stainless steel, Viton and Teflon internals. Brass pressure relief valves not acceptable. Provide a pressure gauge / switch assembly with a stainless steel diaphragm isolator to monitor polymer line pressure. Provide an optical type loss of polymer flow sensor. Flow sensor that restrict flow or rely on a sensing probe and therefore are prone to polymer build-up and failure shall not be used. Provide a 2-1/2" stainless steel liquid filled pressure gauge to monitor system discharge pressure. Provide a swing type check valve to prevent back flow. The check valve shall be sized for the total for the total solution flow of the system, constructed of PVC or Viton.

D. Controls
1. A control panel integral to the system frame shall be provided. The enclosure shall be rated NEMA 4X and constructed of FRP. The control panel shall consist of all controllers, digital displays, potentiometers, switches, lights, relays and other control devices required for a complete operational system. The control panel and all components shall be industrial duty. All skid mounted electrical components interconnected to the control panel shall terminate at numbered and labeled terminal blocks. The terminal blocks shall be sized for 14 gauge wire. Wire shall be neatly run through wire race-way and numbered with shrink tubing type labels. Adhesive labels shall not be used. The control panel shall be positioned such that there are no obstructions in front of the control panel per related NFPA requirements.
2. Power; 120 VAC, 1Ph, 60/50 Hz with a 10' power cord and receptacle.
3. A circuit breaker on the main control circuit and on each motor shall be provided as manufactured by Allen Bradley or equal. Fuses shall not be used for the circuit protection.
4. Operator interface- Discrete Selector Switch:
   a. System ON/OFF (reset) / Remote
   b. One-Turn Potentiometer – Mixer Speed
   c. Ten-Turn Potentiometer – Progressive Cavity Metering Pump Control
5. Status / Alarm Indicators:
   a. Main Power On
   b. Low Water Differential Pressure Alarm
   c. Low Polymer Flow Alarm
6. Inputs (signals by others)
   a. Remote Start / Stop (discrete dry contact)

b. Pacing Signal Based on Process Flow (4-20mA)

7. Outputs:
   a. System Running (discrete dry contact)
   b. Remote Mode (discrete dry contact)
   c. Common Alarm (discrete dry contact)
   d. Polymer Pump Rate (4-20mA)

2.2 TECHNICAL DATA

A. Connections – Plumbing
   1. Dilution water inlet, 1.5" FNPT
   2. Neat polymer inlet, 0.5" FNPT
   3. Solution discharge, 1.5" FNPT

B. Connections – Electrical
   1. Standard, grounded male plug – 120 / 1/ 60, 20 amps
   2. Plug in connection – 4-20 mA signal input
   3. Terminal blocks – dry contact input for remote start
   4. Terminal blocks – dry contact alarm output
   5. Terminal blocks – dry contact run output
   6. Terminal blocks – control switch status output

C. Dimensions
   1. Frame – 34" wide x 24" deep x 75" high

D. Materials of Construction
   1. Structural frame – 304 stainless steel
   2. Plumbing – Schedule 80, PVC
   3. Mixing chamber – PVC, Clear Polycarbonate

E. Performance
   1. Dilution water –60-1200 gph primary mixing

   2. Metering pump –0.25- 10.3 gph neat polymer

PART 3 EXECUTION

3.1 INSTALLATION

A. The equipment shall be installed per the contract documents and manufacturer's recommendations.

3.2 WARRANTY

A. Polymer feed system shall be warranted for a period of 12 months from the date of final acceptance of the entire project by the Owner.

B. In addition, supplier shall warrant the system to operate in accordance with the performance requirements of the belt filter press.

3.3 MANUFACTURER'S SERVICES

A. Provide the services of a Representative of the Manufacturer to assist in adjusting and testing the equipment, to supervise initial operation, and to assist in making final adjustments and the tests specified, or which may be necessary to assure the Engineer the equipment is in satisfactory operating condition.

3.4 ADDITIONAL EQUIPMENT TO BE PROVIDED

A. Tote:
   1. Provide two (2) 275 gallon totes with integral electric chemical transfer pump system attached to allow chemicals to be transferred from a new tote/barrel being delivered. Tote to have connection at or near the base for attachment of suction assembly (see below.) Tote shall be equipped with mounting location for tote pump.

B. Tote Accessories (provide 2 each of the following)
   1. Tote Mixer for up to 275 gallon totes. The tote mixer shall have a ¾ HP, 115VAC, 350 RPM, TEFC gear motor, with thermal overload protection. The mixer shaft shall be stainless steel and have a thrust bearing external from the motor support. The bearing frame shall be stainless steel. Two 5" impellers shall be provided. The tote mixer controls shall be integral to the motor and include an ON/OFF switch, and 0-60 minute timer and 10' Power lead. The mixer frame shall be constructed of stainless steel and have lifting handles. Movable Brackets shall be included to adjust the width of the mixer for the tote being used. A stainless steel wall mounting bracket with a drip pan shall be supplied to support the mixer and collect the polymer drips while the mixer is not in use.
   2. Provide a polymer tote pump suction assembly. The assembly shall include a tee with two (2) quick disconnect cam-lock fittings, two (2) 1" full port ball valves, and two (2) lengths of 15 feet of 1" braided PVC hose w/ 1" full port ball valve on one end and any/all required additional components to connect to the tote and blending/feed system inlet.
   3. Provide a tote scale

C. Tote Mover:
   1. Provide Toyota 6BWC20 Tote Mover

END OF SECTION

THIS PAGE INTENTIONALLY LEFT BLANK FOR DOUBLE SIDED PRINTING

SECTION 46_41_23

SUBMERSIBLE MIXERS

PART 1 GENERAL

1.1 SUMMARY

A. This specification covers the work necessary to furnish and install two (2) submersible mixers as specified herein and as shown on the plans
   1. Northside WWTP
      a. 2 units
      b. Wilo USA LLC TR75-2.19-6/16

B. All listed iron and steel products used in this project must be produced in the United States. The term "iron and steel products" means the following products made primarily of iron or steel: lined or unlined pipes and fittings, manhole covers and other municipal castings, hydrants, tanks, flanges, pipe clamps and restraints, valves, structural steel, reinforced precast concrete, and construction materials. The deminimis and minor components waiver apply to this contract for minor components.

1.2 RELATED SECTIONS

A. Section 01_00_01 Basic Requirements

B. Section 01_33_01 General Submittal Requirements

C. Section 01_33_02 Pre-bid Equipment Submittal Requirements

D. The Contract Documents are a complete unit and complementary to each other. The individual Specification sections and other Contract Documents do not contain all cross references to "related work" or "related sections." It is the Contractor's responsibility to review the complete Contract Documents in order to properly scope, schedule and coordinate the work of any/all subcontractors, suppliers, and others on this project. Anything called out in one location of the Contract Documents is binding as if it were called out in all sections of the Contract Documents.

1.3 SUBMITTALS

A. Submittals for products and miscellaneous items in this specification section shall be submitted in accordance with Section 01_33_01 General Submittal Requirements and related submittal sections and provisions of the Contract Documents.
   1. The Contractor shall submit information for the units that he proposes to supply, showing thrust, propeller diameter, propeller speed, gear ratios, brake horsepower, power input to electric drive motor for the various conditions under which the units are to operate along with descriptive data and specifications describing in detail the construction of the complete units.
   2. The parameters thrust and power input to the electrical drives shall have been measured in accordance with ISO 21630 during product development.

3. The successful bidder shall submit to the Engineer for approval, shop drawings, showing all weights and dimensions necessary for the installation of foundations and anchor bolts.

1.4 WARRANTY

A. The manufacturer shall warrant the equipment to be of quality construction, free from defects in materials and workmanship. The warranty shall become effective upon acceptance of the project by the Owner (after completion of final inspection.)

B. The municipal-use submersible mixers and their motors shall be covered by a non-prorated four (4) year warranty against defects in materials and workmanship that shall include 100% parts and labor. This warranty shall not be limited by hours of running time or operation from variable speed drives.

C. Components failing to perform as specified by the Engineer, or as represented by the manufacturer, or proven defective in service during the warranty period, shall be replaced, repaired, or satisfactorily modified by the manufacturer without cost of kind to the Owner.

PART 2 PRODUCTS

2.1 MANUFACTURERS

A. MANUFACTURER
1. Submersible mixers shall be manufactured by Wilo USA LLC or pre-approved equal.
2. Any mixer manufacturer, other than specified, proposing to offer the following equipment must submit a pre-bid qualification package to the Engineer to determine that the equipment complies with the requirements of the Contract Documents. The Engineer must receive this information not less than 14 days prior to the Bid Date. The Engineer will issue an addendum prior to the bid date that lists any pre-approved equipment. Contractors and manufacturers are advised that a manufacturer named as an approved supplier is not excused from meeting all of the technical and performance requirements of this specification. The pre-bid qualification package shall include complete mixer performance data, evidence of compliance with the installation experience requirements of this Section and a letter from an officer of the company of the mixer manufacturer listing all exceptions to the specifications.

B. PERFORMANCE
1. Furnish two (2) submersible mixers for the Pre-EQ basin. The basin(s) shall contain wastewater mixed liquor of a solids concentration of not more than 1% total suspended solids (TSS) by weight. Each mixer shall be capable of the following performance:

a.	Parameter	Pre-EQ Basin
b.	Number of basins	1
c.	Number of mixers per basin	2
d.	Basin dimensions, L x W x H x SWD, ft	78.67 x 49.33 x __ x 22
e.	Basin TSS, %	1
f.	Model	TR75-2.19-6/16
g.	Minimum Propeller Diameter, in. (mm)	29.5 (750)

h.	Number of Propeller Blades	3
i.	Maximum Propeller Speed, rpm	192
j.	Minimum Flow, gpm (m^3/s)	13,310 (0.84)
k.	Minimum Thrust, lbf (N)	357 (1590)
l.	Maximum Motor Speed, rpm	1,100
m.	Maximum Rated Motor, hp/unit	6.0
n.	Motor voltage, v / phase	460 / 3
o.	Minimum Motor Reserve at rated duty, %	6
p.	Minimum Water Level above Propeller	3.6 (1100)

2.2 MIXER CONSTRUCTION

A. GENERAL
1. The mixer shall be the submersible type and shall be installed in location as shown in the plans.
2. All mating surfaces of the major castings requiring a watertight seal shall be machined and fitted with FPM (Viton) O-rings.
3. All nuts, bolts, washers, and other fastening devices supplied with the mixer shall be AISI 316 stainless steel.

B. MIXER HOUSING
1. All major components of the mixing unit (i.e. stator housing, seal housing, and cable entry) shall be manufactured from close-grained ASTM A48 Class 35 (GG25) or higher cast iron.

C. PROPELLER
1. Propellers shall be manufactured from closed cell polyurethane (PUR). No welded steel or stainless steel propeller shall be accepted.
2. The propeller shall have a swept-back profile and at least three (3) blades. The propeller blades shall be thicker on the leading edge than the trailing edge and thicker towards the hub than at the tip to allow the propeller to free itself from rags as it turns. The blades shall be smooth, finished throughout, and shall be free from sharp edges.
3. Propellers shall be statically and dynamically balanced.
4. Propellers shall be slip fit and securely held to the shaft by a stainless steel washer and bolt assembly that is enclosed in a separate hub chamber. The hub chamber is fitted with an O-Ringed cap that seals the entrance of the propeller hub chamber device. The output shaft shall be splined to mate with the matching spline insert of stainless steel that forms the hub of the propeller.

D. PROPELLER SHAFT
1. The shaft connecting the propeller to the gear reducer shall be constructed of AISI 329 (1.4462) stainless steel.
2. Minimum propeller shaft diameter (D), measured at the outermost bearing, shall be 1.77-in (45-mm).
3. The propeller shaft shall be supported such that the length (L) from the outermost bearing to the hub of the propeller shall not exceed 3.88-in (98.5-mm). The shaft overhang ratio of the distance from the bearing to the hub of the propeller (L) divided by diameter of the shaft at the bearing (D) shall not exceed 2.2.

E. BEARINGS

1. Each mixer shall be furnished with a minimum of four (4) sets of bearings spaced to minimize shaft deflection to offer maximum bearing life. At a minimum, at least two sets of the bearings shall be of double row design. Designs with fewer than four (4) sets of bearings shall not be allowed.
2. A minimum of two sets of bearings shall support the propeller shaft (shaft from gear box to the propeller). Designs where the propeller shaft is supported solely by the gearbox shall not be acceptable.
3. Mixer shaft overhang and bearing design shall provide a minimum B-10 life of 100,000 at the rated duty.
4. Bearings shall be sealed, grease lubricated and maintenance-free.

F. MECHANICAL SEALS
1. Each submersible mixer shall be provided with two separate seal chambers. The inner chamber shall be located between the dry stator chamber and the gear reduction chamber. The outboard seal chamber shall be located between the gear reduction chamber and the outside of the mixer at the hub of the propeller.
2. Each seal chamber shall be provided with an independent set of mechanical seals and a lip seal running in an oil bath. The inboard set of seals shall be mounted in the chamber between the motor and gearbox. The outboard set of seals shall be mounted between the gearbox and the propeller.
3. Each mechanical seal set shall be provided with solid sintered silicon carbide seal face material on both the stationary and rotating components. Both the inboard mechanical seal set and the outboard mechanical seal set shall be silicon carbide.
4. The metal components of the mechanical seal case shall be constructed of AISI 316 stainless steel.
5. A moisture sensor probe shall be furnished in the outboard seal oil chamber of each mixer. The sensor shall be wired to the control panel and shall activate an alarm light upon moisture intrusion.
6. The outboard seal sensor probe shall be externally located and accessible for maintenance without the need to disassemble the mixer for service or replacement.

G. GEAR REDUCER
1. The motor shall drive the submersible mixer propeller through a planetary gear reduction drive system that locates the motor shaft in line with the propeller shaft.
2. The motor shaft shall be fitted with a keyed sun gear that uses high efficiency straight cut teeth to engage the planetary gear section.
3. The sun gear system shall be custom matched to the planetary gear system to allow for propeller speed changes in the field by a simple exchange of the sun gear and the planetary gear plate.
4. The planetary gear section shall consist of three identical gears mounted on a stainless steel backing plate designed to withstand 100% lock stress from the propeller without gear or bearing damage.
5. Each planetary gear shall be supplied with precision needle bearings, which are lubricated by the gear lubricant in the gear chamber.
6. There shall be a minimum of three planetary gears spaced 120 degrees around the central sun gear.
7. The planetary gear section shall be easily removed and shall be interchangeable with other ratios and for simplified spare parts inventory.
8. The planetary gear section shall also engage a ring gear mounted in the outer surface of the gear chamber, which shall cause the motor rotation to also rotate

the planetary gear plate that shall be fitted to the output propeller shafting by the use of a straight splined connection.

9. The planetary gear plate shall be retained on the output propeller shaft by the use of a snap ring and snap ring groove in the output shaft.
10. The planetary design shall be designed such that with regular oil changes, no further maintenance should be required during the life of the submersible mixer in the installation. The gears shall have a minimum L-10 life of not less than 100,000 hours at the rated duty.
11. Gear oil changes shall be easily made using external stainless steel pipe plugs that are sealed via nylon washers.
12. Standard 80 to 90-weight gear oil either normal or synthetic shall lubricate the gear section.

2.3 MOTORS

A. SUBMERSIBLE MOTORS

1. Each mixer shall be furnished with a squirrel cage, induction motor enclosed in a watertight housing suitable for use and compatible with all variable frequency drive systems. Motor cooling shall be accomplished by submergence in liquid.
2. The motor shall be air-filled and constructed with moisture resistant NEMA Class H insulation and Class H slot liners and constructed to NEMA B design standards. The copper wound stator shall be dipped in epoxy enamel and hardened to withstand a temperature of 180 ☐C as defined in NEMA Standard MG-1. Each winding phase or layer shall be laced with Class H glass lined paper. The use of cable ties to restrain windings shall not be allowed. The rotor shall be statically and dynamically balanced after fabrication. The rotor shall utilize aluminum amortisseur bars and short circuit rings. The motor shall be certified for continuous duty with a service factor of 1.10.
3. The motor shall be capable of sustaining 15 starts per hour (unlimited starts with VFD) at an ambient temperature of 40 °C.
4. The motor shall be capable of uninterrupted operation with a voltage drop of 10%.
5. Thermal switches shall be furnished to monitor stator temperatures. The stator shall be equipped with two (2) thermal switches. Thermal switches shall automatically de energize the motor when its temperature exceeds a preset limit as recommended by the manufacturer.
6. The motor shall bear the FM (Factory Mutual) explosion-proof label certifying its use in a Class 1, Division 1, Groups C & D hazardous location.
7. The mixer manufacturer's nameplates shall be engraved, laser etched or stamped on stainless steel and fastened to the motor casing.

B. SHAFTS

1. The motor shaft shall be constructed of AISI 420 (1.4021) stainless steel. Carbon steel shafts or shafts with sleeves of any type are not acceptable. The shaft shall be one-piece construction without joints or stubs attached.
2. Minimum shaft diameter shall be 1.375-in (35-mm) at the double-row motor shaft bearing.

C. POWER AND CONTROL CABLES

1. Power and control cables shall be furnished in lengths to run un-spliced from the mixer to the control panel or disconnect as shown on the Contract Drawings and as specified herein (40-ft). Cables shall terminate with conductor sleeves that

bundle the entire group of strands of each phase to improve termination at the control panel. The sleeves shall be provided to confirm that all strands of each conductor are terminated properly.

2. Cables shall be of the "NSSHOU" type and shall be approved by the MSHA for use in hazardous locations and shall conform to industry standards for loads, resistance under submersion against sewage, and be of stranded construction. The cables shall enter the mixer motor through a heavy duty galvanized cast iron entry assembly that shall be provided with an external clamp assembly to protect against tension once secured providing a strain relief function as part of standard construction.
3. The cables for each mixer motor shall pass through the galvanized cast iron strain relief component and then through a series of stainless steel disks and Buna-n grommet that is sandwiched between the disks to control compression of the grommet. The cable entry design shall be of the type recommended in the Factory Mutual Research Corporation specifications for Explosion Proof Certification. The entry shall be comprised of the cast iron fitting that will include the Buna-N strain relief grommet coupled with a poured conductor section. In the poured section, only Factory Mutual approved sealant shall be used to wick into each conductor strand that has the insulation removed in this area to provide a positively leak proof seal for the power and sensor cords.

2.4 REMOVAL SYSTEM

A. GUIDE RAIL (MAST) SYSTEM

1. A guide rail of AISI 304SS shall be used to mount each mixer during operation and to guide the units during installation and removal for service. The system shall consist of a bottom assembly, mixer support assembly, 120-mm by 120-mm guide pipe, upper support and positioning device. The system shall be fixed at the bottom of the tank in a pivot that shall allow horizontal rotation of the mast through not less than 120 degrees. All brackets shall be constructed of AISI 316 stainless steel. The mast bearings shall be constructed of Hostaform (POM). Power/control cable holders shall be provided every five feet.
2. The bottom assembly shall be bolted to the floor of the tank, and provide support for the guide pipe. It shall also include a hole to accept the guide pipe bottom plug. The bottom console shall be constructed of AISI 316Ti stainless steel.
3. The assembly shall be strong enough to support the weight of the mixer, the guide pipe and the mixer preload force. The assembly shall be positioned in such a manner so as to prevent the mixer propeller tips from hitting the basin floor. The mixer shall rest upon a support foot.
4. The upper guide holder assembly shall secure the system to the tank edge or platform. It shall also provide the lateral support for the guide pipe. The assembly shall contain a location to secure the electrical motor cable holder.
5. The mixer support frame assembly (including angular adjustment brackets) shall be manufactured from AISI 316Ti stainless steel.

B. HOIST (CRANE) ASSEMBLY

1. A hoist system shall be used for lifting and lowering of the mixer on the guide rail during installation and maintenance. The system shall be capable of 360 degree-rotation. Each hoist assembly shall be rated at a minimum of 550-lbs (250-kg). All crane and receiving boxes shall be constructed of AISI 304 stainless steel. The sleeves and the bearings in the receiving box shall be constructed of Nylon (PA).

2.5 SHOP PAINTING

A. Primer and Finish Paint-Shop apply to all exterior ferrous surfaces of the mixer and motor.
   1. Solids by volume: 97%
   2. Type: Solvent-free ceramic coating, impregnated with aluminum oxides
   3. Total Dry Film Thickness: 400 microns (15 mils) minimum
   4. Minimum Adhesion: 15-N/mm2 (2,030-psi) per ISO 4624.
   5. Minimum Hardness: 110 on Buchholz Indentation scale
   6. Resistance: Level 1 (continuous duty) for sewage with pH of 6-11, Level 1 for saltwater, Level 3 (not recommended) for 10% hydrochloric acid.

B. Surface Preparation-Prepare all surfaces to receive coating system.
   1. Method: Blasting per ISO 12944-4
   2. Standard Cleanliness Grade: 2.5
   3. Minimum Peak to Valley Height: 70 microns (2.75 mils)

PART 3 EXECUTION

3.1 FIELD QUALITY CONTROL

A. The manufacturer shall provide the services of a factory trained service technician to inspect the installation, assist in the successful start-up of the mixers, and instruct the Owner in proper operation and maintenance of the equipment for a period of not less than one (1) eight (8) hour day.

END OF SECTION

THIS PAGE INTENTIONALLY LEFT BLANK FOR DOUBLE SIDED PRINTING

SECTION 46_51_55

LOW PROFILE CASCADE AERATOR

PART 1 GENERAL

1.1 SUMMARY

A. This section covers furnishing a complete cascade post aerator system as specified herein. The cascade post aerator, further described as a low profile cascade aerator (LPCA), is designed for installation in a concrete basin as shown on the Plans and Drawings and shall be a rectangular, open channel type, low profile, free flowing aerator.
   1. Northside WWTP
      A. Hydraulic loading capacity of 4.5 MGD average daily flow
      B. 11 MGD peak
      C. D.O. minimum of 0.0 mg at influent
      D. D.O. 6.0 mg/l in the aerobic effluent.

B. The LPCA equipment shall consist of a plurality of channel dividers with Inlet Flow Control Optimizer / Equalizer Gate and weirs. The inlet weirs shall be for flow control and each shall increase in height from one channel to the next. Each channel shall be provided with a plurality of low head aeration baffles spaced as shown on plans. Each aeration baffle shall be provided with patented trapezoidal air infusion plates as shown to provide optimum transfer efficiency. At peak flow the system will offer even flow distribution to each channel. To prevent short circuiting and critical for system process performance, channels and aeration baffles are constructed so as to eliminate all gaps.

C. All listed iron and steel products used in this project must be produced in the United States. The term "iron and steel products" means the following products made primarily of iron or steel: lined or unlined pipes and fittings, manhole covers and other municipal castings, hydrants, tanks, flanges, pipe clamps and restraints, valves, structural steel, reinforced precast concrete, and construction materials. The deminimis and minor components waiver apply to this contract for minor components.

1.2 RELATED SECTIONS

A. Section 01_00_01 Basic Requirements

B. Section 01_33_01 General Submittal Requirements

C. Section 01_33_02 Pre-bid Equipment Submittal Requirements

D. The Contract Documents are a complete unit and complementary to each other. The individual Specification sections and other Contract Documents do not contain all cross references to "related work" or "related sections." It is the Contractor's responsibility to review the complete Contract Documents in order to properly scope, schedule and coordinate the work of any/all subcontractors, suppliers, and others on this project. Anything called out in one location of the Contract Documents is binding as if it were called out in all sections of the Contract Documents.

1.3 SUBMITTALS

A. Submittals for products and miscellaneous items in this specification section shall be submitted in accordance with Section 01_33_01 General Submittal Requirements and related submittal sections and provisions of the Contract Documents.
   1. Manufacturer's literature, illustrations, and engineering data including total weight of each unit, connection details, and performance data.
   2. Drawings shall show dimensions, overall arrangement of equipment and materials of construction.
   3. Literature describing the equipment and showing all important details of construction and dimensions. Dimensions shall show overall size and space requirements including that for installation, leveling, dismantling and maintenance.
   4. Cross sections and details, as to show that all components are in conformance with the intent of the specification and are satisfactory from the standpoint of design and physical arrangement.

1.4 REFERENCES

A. The Contractor and/or Manufacturer shall follow the standards listed below, except as otherwise specified herein. The latest revision or edition in effect at the time of bid opening shall be utilized.
   1. American Society for Testing and Materials (ASTM)
   2. ASTM A167 – Type 304L & 316L Stainless Steel
   3. American National Standards Institute (ANSI)
   4. American Welding Society (AWS)

1.5 DELIVERY, STORAGE & HANDLING

A. The trapezoidal Air Infusion Plates and Air Infusion Baffles shall be factory assembled to the channel dividers and shall be shipped in sections. All equipment shall be shipped with suitable in-transit protection.

B. Lifting straps in lieu of chains are to be employed when applicable (by Contractor).

C. Equipment shall be stored and protected in accordance with the manufacturer's recommendations.

1.6 QUALITY ASSURANCE

A. One Cascade Post Aerator Manufacturer shall supply all equipment specified in this Section.

B. Basis of Design
   1. The structural, mechanical and process design for the cascade post aerators are based on information provided by the first-listed low profile cascade aerator Manufacturer. The cost of any changes and modifications due to furnishing equipment other than that specified shall be borne solely by the Contractor. The Contractor shall also be responsible for any substitute equipment furnished complying with the full intent of the specifications, and be responsible for any patent infringement to the LPCA.
   2. Fundamental changes in the configuration of the post aerator system will not be allowed. LPCA equipment submitted as equivalent products shall not require

additional basin area or depth to achieve the designated performance requirements. The Contractor shall submit complete drawings, specifications and supporting documents, identifying all proposed changes, a list of installations and certified performance data, to the Engineer for approval at least 14 days prior to bid date.

C. Responsibilities

1. The LPCA Manufacturer is responsible for delivery of equipment and supplies required under these specifications. The Contractor is responsible for proper off-loading and storage at the delivery location, and coordination and integration of all equipment required for installation in the concrete basin, and all other associated work shown on the drawings and specified in the Contract Documents. The Contractor is responsible for ensuring that the LPCA system shall be properly coordinated and will function as a unit in accordance with these specifications. The Contractor shall bear ultimate responsibility for equipment coordination, installation, operation, and guarantees.

D. Workmanship

1. Workmanship in the fabrication of the LPCA system shall be of high quality and include the following requirements. The assembled channel aeration baffle assembly shall have members that are straight and true. Structural distortions, warps, and other defects shall not be present in the aeration assemblies before or after installation in the basins. The topmost corners of all Air Infusion Plates shall be ground round and smooth.

1.7 WARRANTY

A. The manufacturer shall warrant the equipment to be of quality construction, free from defects in materials and workmanship. The warranty shall become effective upon acceptance of the project by the Owner (after completion of final inspection.)

B. The equipment, apparatus, and parts furnished shall be warranted from a period of one (1) year, excepting only those items that are normally consumed in service, such as oil, grease, gaskets, o-rings, etc. The manufacturer shall be solely responsible for the warranty of the equipment and all components.

C. Upon request from the Engineer and/or the Owner, the manufacturer shall demonstrate proof of financial responsibility with respect to performance and delivery date. In addition, the manufacturer shall provide proof of evidence of facilities, equipment, and skills required to produce the equipment specified herein and provide technical service and replacement parts.

D. Components failing to perform as specified by the Engineer, or as represented by the manufacturer, or proven defective in service during the warranty period, shall be replaced, repaired, or satisfactorily modified by the manufacturer without cost of kind to the Owner.

PART 2 PRODUCTS

2.1 ACCEPTABLE MANUFACTURERS

A. The equipment shall be manufactured by:
   1. Jim Myers & Sons, Inc. (JMS)
   2. Smallberry Manufacturing
   3. No 'Or Equals' will be accepted

B. The equipment described by this specification defines minimum equipment requirements as supplied by the first-listed manufacturer. All unforeseen costs associated with any deviation from this specification shall be the sole responsibility of the Contractor.

C. The equipment shall be the product of a manufacturer engaged in the design and manufacture of similar equipment in successful operation in similar applications. The manufacturer shall have experience with 20 installations of the same type of equipment as specified herein with successful operation for a minimum of 10 years.

D. Pre-qualification requires manufacturers to submit the following 30 days prior to bid:
   1. A list of at least 10 previous installations, including contact information, of similar size, design, and complying with the requirements as set forth within this specification.
   2. Preliminary drawings and process calculations specific to this project.
   3. A letter stating that their proposed design complies with all requirements as specified herein. If there are deviations from the specification a letter must address each deviation in detail.
   4. Equipment shall be manufactured in the United States by US citizens fully certified by the American Welding Society for the tungsten inert gas (TIG) welding process to standard AWS D1.6. Letters of current certification shall be provided prior to bid and within the submittals.

2.2 MATERIALS OF CONSTRUCTION

A. LPCA equipment shall be supplied by Manufacturer and shall be fabricated of Type 304 stainless steel and shall include all necessary stainless steel anchor bolts, seals, and accessories.
   1. Channels, Air Infusion Plates, Aeration Baffles and Closure Plates are to be fabricated with Type 304 SS with a minimum thickness of 0.120" (11 gauge).
   2. Influent Flow Control Optimizer / Equalizer Gate, trapezoidal in design, is to be fabricated with Type 304 SS.

B. Hardware: All field assembly anchor bolts, bolts, nuts, washers and seal material shall be supplied by Manufacturer:
   1. Nuts, fasteners, and anchor bolts (3/8" diameter) are to be Type 304 SS.
   2. Seal Material: 3M 3/8" round ribbon sealant to be provided by Manufacturer.

2.3 LOW PROFILE CASCADE AERATOR (LPCA) SYSTEM

A. The LPCA system shall be fabricated in accordance with the details indicated on the drawings and the requirements specified herein.

B. The LPCA is a static system design and is designed and constructed for the minimum flow and maximum flow as specified and utilized in the treatment plant's post aeration process to increase the aerobic effluent dissolved oxygen content.

C. The LPCA as specified is designed for installation (insertion) in the treatment plant post aeration concrete structure (by Contractor) as shown on the Plans, and utilized to increase the plant effluent dissolved oxygen content.

D. The unit shall be structurally reinforced by attaching structural bracing to the top of the channel dividers as shown on the drawings. The unit shall be sealed under the channel dividers and anchored in the concrete channel as directed by the manufacturer's instructions. Said sealing of all channels to the concrete channel floor to eliminate all gaps is critical for system process performance.

E. The Influent Flow Control Optimizer / Equalizer Gate, for the specified design minimum and maximum influent hydraulic loading, directs the variable influent flow to the appropriate channel or channels to optimize system performance and offers a patented integral air infusion plate for greater aeration performance during periods of low flow. Air infusion plates and aeration baffles will be trapezoidal shaped to optimize air infusion at minimum flows and achieve the effluent dissolved oxygen concentration at the full range of flow per 1.1.A. At peak flow the system must be designed to offer even flow distribution to each channel.

PART 3 EXECUTION

3.1 INSTALLATION

A. The Contractor shall install the aerator equipment where indicated on the contract drawings and in strict accordance with the manufacturer's recommendations.

B. Conform to the requirements of Section 03300, and the following:
1. Set all anchor bolts using templates as required.
2. The LPCA shall be fabricated for insertion into a concrete basin/channel as shown on the Drawings.
3. All smooth concrete surfaces shall be true plane within 1/4" in 10'-0" as determined by a 10'-0" straight edge placed anywhere on the surface, in any direction.
4. Abrupt irregularities shall not exceed 1/8".
5. 5The unit shall be structurally reinforced by attaching structural angle bracing to the top of the channel dividers as directed by the manufacturer's instructions.
6. Per manufacturer's instructions, the unit shall be sealed under the channel dividers and aeration baffles by Contractor with seal stripping (furnished by Manufacturer) and anchored in the concrete basin to eliminate short circuiting. Said sealing of all channels to the concrete encasement floor to eliminate all gaps is critical for system process performance.

C. Concrete basin (by Contractor) as shown on the Plans is to include influent and effluent chambers to be sized so as to not exceed indicated maximum water elevations. Influent chamber (by Contractor) to include energy dissipation device if necessary to reduce water velocity impact on influent distribution and to evenly distribute flow to Influent Flow Control Optimizer / Equalizer Gate.

D. Contractor will provide concrete encasement/basin with the sloped floor and dimensions as specified on Contract Drawings. Contractor understands the slope and finish tolerances are critical to the performance of the post aerator and are as noted in 3.1.B., Contract Drawings and Manufacturer's recommendations.

E. Contractor must connect accessory parts as required to ensure a complete and operable system as intended. Contractor to exercise great care in erecting and leveling the weir plates so that the units are at the elevations shown on the Drawings or specified herein, and to ensure the aeration system is mounted and sealed to floor and walls to eliminate short-circuiting as intended and per Manufacturer's Instructions.

F. Lubricants
   1. Anti-seize shall be applied to the threads of all stainless steel bolts before assembly at the factory and field assembly.

3.2 MANUFACTURER'S SERVICES

A. Manufacturer's Field Services: The Contractor shall provide the following services in addition to any other services specified herein, and required by these Specifications.
   1. A factory trained manufacturer's representative shall be provided for a minimum of one (1) trip and a minimum of eight (8) hours to provide installation supervision, start-up and field testing services, and O&M training services. The installation services shall be coordinated between the Contractor and the Manufacturer. The start-up and field testing services, and the O&M services shall be coordinated with the Engineer.
   2. After installation supervision and field testing services by the manufacturer, the Conctractor shall submit to the Engineer, a certification letter on the manufacturer's letterhead and signed by the manufacturer certifying that the equipment was installed per the manufacturer's recommendations.
   3. The manufacturer shall provide start-up reports covering installation inspection and start up activities.
   4. The manufacturer shall provide operator training to all required plant personnel.

B. All costs, including travel, lodging, meals and incidentals for Manufacturer service shall be included in the Contractor's bid.

END OF SECTION

SECTION 46_52_57

SBR & AEROBIC DIGESTER

PART 1 GENERAL

1.1 SUMMARY

A. The activated sludge treatment system selected for this project is the Sequencing Batch Reactor (SBR) process. The system shall consist of Three (3) SBR Tanks and Two (2) Aerobic Digesters, as shown on the project plans. Equipment furnished under this section shall include aeration systems with Pumps, floating decanters, flow control manifolds, automatic valves (listed in this section), blowers, waste sludge pumps, control panel, and necessary components to provide a completely functional system. Only SBR systems utilizing true batch characteristics with intermittent feed steps will be acceptable.

B. The plans and specifications are based on the EcoCycle SBR™ as manufactured by Parkson Corporation, Shawnee, KS., as the basis of design.

C. The valves, equipment, materials of construction, and controls specified under this section supersede any other specifications located elsewhere in the contract documents as they pertain to this specific equipment.

D. Contractor to coordinate with SBR/Digestor supplier to verify scope of supply and interaction with outlined piping systems on Drawings. Fittings, piping, and miscellaneous components required for a complete and functional system shall be provided complete in Contractor's bid.

E. All listed iron and steel products used in this project must be produced in the United States. The term "iron and steel products" means the following products made primarily of iron or steel: lined or unlined pipes and fittings, manhole covers and other municipal castings, hydrants, tanks, flanges, pipe clamps and restraints, valves, structural steel, reinforced precast concrete, and construction materials. The deminimis and minor components waiver apply to this contract for minor components.

1.2 DESIGN CONDITIONS & EFFLUENT REQUIREMENTS

A. Design Conditions

Influent Parameter	Value	Unit
Average Daily Flow (ADF)	4.5	MGD
Peak Daily Flow(PDF)	11	MGD
BOD	250	mg/l at ADF
TSS	250	mg/l at ADF
Ammonia	33	mg/l at ADF
TKN	50	mg/l at ADF
Phosphorous	7.1	mg/l at ADF
Elevation	1,060	feet

Max wastewater temperature	12	Degrees Celsius
Min wastewater temperature	25	Degrees Celsius

B. Effluent Requirements

Effluent Parameter	Value	Unit
BOD	20	mg/l
TSS	30	mg/l
NH3-N	10	Mg/l

1.3 RELATED SECTIONS

A. Section 01_00_01 Basic Requirements

B. Section 01_33_01 General Submittal Requirements

C. Section 01_33_02 Pre-bid Equipment Submittal Requirements

D. The Contract Documents are a complete unit and complementary to each other. The individual Specification sections and other Contract Documents do not contain all cross references to "related work" or "related sections." It is the Contractor's responsibility to review the complete Contract Documents in order to properly scope, schedule and coordinate the work of any/all subcontractors, suppliers, and others on this project. Anything called out in one location of the Contract Documents is binding as if it were called out in all sections of the Contract Documents.

1.4 SUBMITTALS

A. Submittals for products and miscellaneous items in this specification section shall be submitted in accordance with Section 01_33_01 General Submittal Requirements and related submittal sections and provisions of the Contract Documents.

1.5 REFERENCES

A. The Contractor and/or Manufacturer shall follow the standards listed below, except as otherwise specified herein. The latest revision or edition in effect at the time of bid opening shall be utilized.

1.6 SYSTEM REQUIREMENTS

A. The SBR shall operate as a true batch system with the tanks filled in series. The SBR treatment cycles shall consist of anoxic fill, aerated fill, react, settle, and decant.
   1. Anoxic Fill
      a. During anoxic fill, the influent valve is opened allowing raw influent to enter the basin. No aeration occurs during this period so that anaerobic and anoxic conditions are present to discourage the growth of filamentous

bacteria. The anoxic condition also encourages the growth of well settling, facultative bacteria.

2. Aerated Fill
   a. The aeration system is turned on, allowing biodegradation and simultaneous nitrification / de-nitrification to begin.
3. React
   a. The influent valve is closed. Aeration and mixing occurs until full treatment has been achieved. No flow enters the basin preventing potential for short circuiting.
4. Settle
   a. The aeration and mixing system is turned off creating a perfect quiescent condition. Liquid / solids separation occurs.
5. DECANT
   a. The effluent valve is opened allowing treated effluent to discharge from the reactor.

B. Design parameters for the SBR shall be per the following table:

	SBR	Digester
Number of Basins	3	2
Minimum Total Volume (MG)	4.12	1.40
Tank dimensions (ft)	167′ x 50′ x 24′	92′ x 46′ x 24′
Tank SWD (ft)	22′	22′
Maximum MLSS at TWL (mg/l)	2,713	N/A
Minimum oxic SRT (days)	6.0	N/A
Actual Oxygen Required, AOR (lbs/d)	16,735	3,148
Alpha	0.85	0.70
Beta	0.95	0.95
Standard Oxygen Required , SOR (lbs/d)	26,534	6,006
Number of cycles per basin per day	4.0	N/A
Minimum anoxic fill percentage	70%	N/A
Maximum daily aeration time / basin (hrs)	12	24
SOTE (maximum)	27.1	15.8
Minimum settle time per cycle (minutes)	45	N/A
Maximum decant time at ADF (minutes)	48	N/A
Maximum average decant rate (gpm)	7,800	Limit to 900 gpm

1.7 WARRANTY

A. The manufacturer shall warrant the equipment to be of quality construction, free from defects in materials and workmanship. The warranty shall become effective upon acceptance of the project by the Owner (after completion of final inspection.)

B. The equipment, apparatus, and parts furnished shall be warranted from a period of one (1) year from the date of final acceptance by Owner, excepting only those items that are normally consumed in service, such as oil, grease, gaskets, o-rings, etc. The manufacturer shall be solely responsible for the warranty of the equipment and all components.

C. Upon request from the Engineer and/or the Owner, the manufacturer shall demonstrate proof of financial responsibility with respect to performance and delivery date. In addition, the manufacturer shall provide proof of evidence of facilities, equipment, and skills required to produce the equipment specified herein and provide technical service and replacement parts.

D. Components failing to perform as specified by the Engineer, or as represented by the manufacturer, or proven defective in service during the warranty period, shall be replaced, repaired, or satisfactorily modified by the manufacturer without cost of kind to the Owner.

E. It is not intended the manufacturer assume liability for consequential damages or contingent liabilities arising out of failure of any product or parts thereof to operate properly, however caused by or resulting from or arising out of defects in design or manufacture, delays in delivery, replacement, or otherwise.

PART 2 PRODUCTS

2.1 FLOW CONTROL MANIFOLDS - SBR

A. An 18" flow control manifold shall be provided for each SBR basin. Manifolds shall be designed and sized to distribute the influent flow evenly across the reactor floor during the fill period. Manifolds shall be sized such that the maximum exit velocity through the openings at peak flow conditions is < 0.5 feet per second. Manifolds shall extend a minimum of 50% across the basin length or diameter. Each manifold shall terminate with a flanged connection as shown on the plans. Manifolds shall be constructed of filament wound FRP manufactured in accordance with ASTM D-2996 standards.

2.2 JET AERATION HEADERS - SBR

A. The jet aeration system shall be designed to transfer the oxygen specified in Table 1.04a. A minimum of one (1) dual directional aeration manifolds shall be provided in each SBR basin. Each manifold shall consist of liquid line, air line, and jet nozzle assemblies. The liquid line, air line, and jet nozzles shall be permanently laminated together to form an integral assembly. The manifolds will be shipped to the jobsite in section up to 40' in length. Fiberglass field weld kits shall be provided to connect manifold sections in the field. Labor to apply the field weld kits shall be provided by the installing contractor.

B. Re-circulated liquid shall enter the lower liquid manifold through a flanged connection as shown on the plans. The liquid header shall be cylindrical having jet nozzles mounted on a horizontal plane. Liquid flow path shall be free of burrs or rough edges that may collect debris.

C. Low pressure air shall be fed through the upper air line and air drop pipe which will terminate with a flanged connection near the top of the SBR basin. The air line shall also be cylindrical and mounted above and parallel to the liquid manifold. The air line shall be provided with orifices which allow the flow of air into the air chambers mounted to each jet assembly. The air chamber shall provide a flow path for the air to enter the outer air jet and shall also act as a support to hold the airline in place. Individual feeds at each jet shall insure uniform distribution of air across the length of the manifold.

D. The liquid and air piping shall be fabricated of corrosion resistant, structurally sound, machine filament wound thermosetting resin pipe conforming to ASTM D2996. Minimum pressure rating of piping shall be 75 psi. Internal pressure ratings shall exceed 5:1 safety factor for short term burst per ASTMD-1599 and shall exceed 1.8:1 safety factor based on ASTM D-2992 for long term hydrostatic design basis (HDB) per AWWA C-950. Hand layed FRP piping, PVC, stainless steel, or any other types are not acceptable. Minimum acceptable pipe wall thickness (including 20 mil corrosion liner) shall be per the following table:

Table 2.02a Filament Wound Pipe Thicknesses

Diameter	Wall Thickness
4″	0.100
6″	0.145
8″	0.145
10″	0.185
12″	0.185
14″	0.230
16″	0.270
18″	0.270
20″	0.315
24″	0.350
30″	0.440

E. A total of fifty-two (52) jet nozzle assemblies shall be provided in each SBR basin. Each jet aerator assembly shall consist of an inner liquid nozzle, and an outer air/liquid delivery nozzle. The jets shall be molded and assembled to be concentric with the inner liquid and outer air/liquid discharge nozzle in axial alignment. The air/liquid discharge nozzle shall be of constantly decreasing cross sectional area to increase the velocity of the air / liquid mixture as it passes through the nozzle. The inner liquid nozzle shall be constantly reducing in the direction of the flow path. The outer air jets shall also be constantly reducing in the direction of the flow path and shall be designed to achieve substantial air entrapment in the motive liquid. The outlets of both the inner and outer nozzles shall be circular and shall be designed to pass a 1-1/2″solid. The inner and outer nozzles shall be laminated together to form a single unit. The jet aerator assembly shall be joined to the liquid duct and the air manifold and laminated for strength to form a single integrated unit. Systems with non-integral jets will not be accepted. The base of the jet aerator assembly shall match the contour of the liquid pipe to provide a smooth liquid flow path. No portion of the jet nozzle assembly shall protrude into the liquid pipe. Nozzles shall be manufactured in the USA.

F. Molded parts (inner nozzles, outer nozzles, air chambers) shall be fabricated of isophthalic or vinyl ester laminating resin, reinforced with chopped strand mat to create a minimum nominal laminate thickness of 3/16″. The interior of each air and liquid nozzle shall contain a chemical and abrasion liner consisting of a minimum of 2 layers of 0.010 inch synthetic Nexus or C-glass surfacing veil. The interior liner shall be a resin-rich surface layer containing no more than 20% by weight of glass. Exterior of outer nozzles and air chambers shall be protected with a separately cured gel coat containing a wax solution and either pigmented or provided with UV inhibitor to protect from UV degradation. All

construction and laminate quality guidelines shall be in accordance with the National Bureau of Standards (NBS) PS 15-69.

2.3 AIRLIFT FLUSHOUT SYSTEM - SBR

A. An airlift (pneumatic) type flush-out system shall be provided. The system utilizes the blowers to create an air lift effect in the flushout riser so that a reverse liquid flow occurs across the jets. The aeration system manufacturer shall provide the air lift riser, flushout valve, and supports. Supports shall be provided for both the riser and the valve. The valve shall be plug style and shall be located for easy access by the plant operator. Mounting hardware and gaskets shall be provided by the Manufacturer.

2.4 AIR PIPING - SBR

A. In-basin air drop pipe shall be provided by the aeration system manufacturer. The air drop pipe shall connect to the airline of the jet manifolds by means of an adhesive or FRP field weld connection which shall be installed by the Contractor. The upper end of the air drop shall terminate with a flanged connection near the top of the tank wall as shown on the plans. Hardware required to complete this flanged connection will be supplied by the Contractor. In-basin air piping shall be machine filament wound, fiberglass reinforced thermosetting resin pipe fabricated in accordance with ASTM D-2996. Any in-basin air piping beyond the air drop flanged connection shall be by Others. All flanges connecting to FRP must be flat faced.

2.5 LIQUID PIPING - SBR

A. In-basin process equipment shall include adequate pipe, fittings, and supports to connect to Contractor supplied flanged interfaces as indicated on the plans. A flanged connection shall be provided at this interface point, and hardware to complete this flanged connection shall be supplied by the Contractor. In-basin liquid piping shall be machine filament wound, fiberglass reinforced thermosetting resin pipe fabricated in strict accordance with ASTM Specification D-2996. All flanges connecting to FRP must be flat faced.

2.6 SUPPORTS - SBR

A. Aeration equipment, in-basin liquid and air piping, flow control manifolds, and decanters shall be provided with adequate supports to accommodate loads and buoyancy factors experienced by the equipment during operation. Jet manifold supports shall be of the "H" type utilizing a cross support with two Schedule 40 support legs welded to a base plate. Single leg supports used for other in-basin piping shall be constructed of Schedule 40 pipe field welded to a support base. Supports shall be designed to allow for vertical adjustment of equipment to maintain elevations as indicated on the plans. Field welding of supports shall be by the Contractor. Supports shall be constructed of type 304 stainless steel.

B. Pipe supports shall consist of a contoured upper and lower saddle constructed of 3/16" thick stainless steel with a Buna-N or neoprene liner to prevent abrasion of the FRP. Base plates shall be anchored with anchor bolts and grouted in place, if necessary. Anchor bolts and fastening hardware shall be Type 304 stainless steel.

2.7 ANCHOR BOLTS

A. Anchor bolts shall be provided for mounting in-basin equipment provided by the SBR manufacturer. Anchor bolts shall consist of stud, flatwasher, lockwasher, and hex nut. Anchor bolts shall be constructed of type 304 stainless steel. Anchor bolts shall be adhesive type utilizing an acrylic resin and hardener contained in a dual cartridge with static dispensing nozzle. Anchor bolts must be installed to full embedment depth. Mechanical or expansion anchors are not acceptable.

2.8 DIGESTER COARSE BUBBLE DIFFUSERS

A. Aeration system shall be provided with an adequate number of Wide-Band type coarse bubble diffusers to deliver the air rate for the Digester blower as specified in Table 2.12a.

B. Air drop pipe to be provided for the diffuser grid shall be stainless-steel with horizontal 150# flange located at the top of the drop pipe. A stainless steel gasketed coupling shall be provided for connection to the diffuser manifold at the lower end of the drop pipe. Welded stainless-steel components shall be constructed of 304L S.S. Non-welded stainless-steel components shall be fabricated from type 304 SS. All welds and weld surfaces shall be cleaned to remove weld spatter and shall be fully immersed in a pickling solution to remove carbon deposits.

C. Pipe supports shall be provided to support the manifolds and air distributer piping.

2.9 DECANTERS - SBR

A. One (1) floating decanter shall be provided in each SBR basin to remove treated effluent from the SBR reactor. Decanters shall be designed to accommodate the full range of travel between TWL and decanter rest elevation and shall remove a full SBR decant volume within the time specified in Table 1.04a. Decanter main components and materials of construction shall be as outlined in the table below.

Table 2.09a Decanter Components

Float	ASTM D2996 FRP filled with closed cell foam
Draw tube	ASTM D2996 FRP
Drain tube	ASTM D2996 FRP
Flex connector	Natural Rubber / Neoprene (wire re-enforced)
Knee joint assembly	304 stainless steel
Lower mitered elbow	304 stainless steel
Decanter rests	304 stainless steel

B. The draw tube and float assembly are located in parallel and permanently connected using laminated FRP supports. The drain tube is located in the center of the draw tube and provides a flow path for effluent to exit the basin through the flex hose and lower mitered elbow. Miter joint connecting the draw tube and drain tube must be re-enforced with FRP hoop wraps to provide added strength. Drain tube, flex connector, and lower mitered elbow shall be connected by flanged connections with hardware and gaskets provided by the manufacturer. A knee brace assembly shall be provided to allow vertical articulation

of the decanter as water levels move up and down in the reactor. The knee brace assembly shall support the flex connector and prevent lateral movement of the decanter unit. Flex connector shall be suitable for abrasive materials, and shall be rated at 30 inches mercury vacuum and 15 PSI working pressure. Fixed or retractable decanters will not be accepted.

C. The draw tube shall contain an adequate number of solids excluding valves (SEV) to accommodate the average design flow rate based on site hydraulic conditions. The SEV assemblies are designed to isolate the draw tube from the surrounding mixed liquor during the mixing and aeration steps. SEV assemblies shall be mounted to the draw tube using hardware connections to allow for field replacement. The SEV assembly shall consist of stainless steel body, orifice plug with drive rod, stainless steel compression spring, and mounting hardware / gasket. The SEV assemblies shall maintain a liquid tight seal when the effluent control valve is closed. When the effluent control valve is opened, hydraulic head differential is used to over-come the compression spring tension which allows the plugs to un-seat and treated effluent is allowed to enter the draw tube. Plant hydraulics must be such that a minimum of 3.5 feet of static head differential (plus out of basin pipe friction losses) is available between SBR bottom water level and the water level at the effluent discharge. The point of effluent discharge downstream of the SBR shall be either constantly submerged, or designed with a water trap. Decanters must employ positive mechanical type seals for excluding solids from the draw tube. Decanters having an open conduit or any open areas exposed to the mixed liquor during react, or that require additional equipment or motors for pressurization, wear movement, or complete removal out of the liquid, are unacceptable.

2.10 DECANTERS - DIGESTERS

A. One (1) floating decanter shall be provided in each digester to remove supernatant from the basin. Decanters shall be designed to accommodate the full range of travel between TWL and decanter rest elevation and shall remove a full decant volume at an average rate of 1,590 gpm. Decanter main components and materials of construction shall be as outlined in the table below.

Table 2.10a Decanter Components

Float	ASTM D2996 FRP filled with closed cell foam
Draw tube	ASTM D2996 FRP
Drain tube	ASTM D2996 FRP
Flex connector	Natural Rubber / Neoprene (wire re-enforced)
Knee joint assembly	304 stainless steel
Lower mitered elbow	304 stainless steel
Decanter rests	304 stainless steel

B. The draw tube and float assembly are located in parallel and permanently connected using laminated FRP supports. The drain tube is located in the center of the draw tube and provides a flow path for supernatant to exit the basin through the flex hose and lower mitered elbow. Miter joint connecting the draw tube and drain tube must be re-enforced with FRP hoop wraps to provide added strength. Drain tube, flex connector, and lower mitered elbow shall be connected by flanged connections with hardware and gaskets provided by the manufacturer. A knee brace assembly shall be provided to allow vertical

articulation of the decanter as water levels move up and down in the reactor. The knee brace assembly shall support the flex connector and prevent lateral movement of the decanter unit. Flex connector shall be suitable for abrasive materials, and shall be rated at 30 inches mercury vacuum and 15 PSI working pressure. Fixed or retractable decanters will not be accepted.

C. The draw tube shall contain an adequate number of machined orifices to accommodate the average design flow rate based on site hydraulic conditions. Machined orifices shall be located on the upper side of the draw tube.

2.11 SBR PUMPS

A. See Specification Section 43_25_13.23 SBR Motive Pumps. The SBR manufacturer shall be responsible for supplying pumps as listed in the following table.

Table 2.11a Pumps

Location	Type	Quantity	Flow (gpm)	Head (ft)	Hp
Jet Motive	Sub.	3	9519	19	75

2.12 BLOWERS

A. See Specification Section 43_11_16 High Efficiency Blowers. The SBR manufacturer shall be responsible for providing blowers per the following table.

Location	Type	Quantity	Flow (scfm)	Pressure (psi)	Hp
SBR	Centrifugal	4	2,625	9.3	150
Digester	Centrifugal	2	2,721	9.9	200

2.13 VALVES AND VALVE ACTUATORS

A. Valves specified in the table below shall be provided by the SBR manufacturer. Electric actuators shall operate from 460 volts, 3 phase, 60 Hz per source.

Table 2.13a Valves

Function	Quantity	Size	Type	Operator
Influent	3	18″	Plug	Electric
Effluent	3	18″	Butterfly	Electric
Jet Flushout	3	12″	Plug	Manual
Spare Blower Isolation	3	12″	Butterfly	Manual
Supernatant	2	10″	Plug	Manual

B. Plug Valves

1. All plug valves shall be permanently lubricated and shall be of the tight-closing, rubber seat type. Valves shall be suitable for sewage and wastewater application, shall have throttling capability, and shall be rated 150 lb. WOG. Valve bodies shall be cast iron. Valve plugs shall be balanced type and constructed of either cast iron or ductile iron. Passage size shall be a minimum of 80% of the full port area for valves through 20" size and a minimum of 70% of the full port area for valves 24" and larger. Upper and lower bearing shall be either stainless steel or bronze and permanently lubricated. Packing shall be O-ring, U-cup or V-type, and shall be self-adjusting or externally adjustable by means of an external packing gland. Packing gland shall be visible through a standoff between the valve bonnet and actuator base. Packing shall be replaceable without removing the valve actuator or bonnet. All valves shall be leak tested to their full rating prior to shipment. Manual plug valves shall have worm gear actuators with handwheels. Actuators shall be sized for 50 PSI reverse shut off pressure against the face of the plug. Gearing shall be enclosed in a semi-steel housing and be suitable for running in a lubricant. Seals shall be provided on all shafts to prevent entry of dirt and water into the actuator.

C. Butterfly Valves

1. Valves shall be specifically designed for air service and clean water service. All valves shall have a maximum of 50 PSI pressure rating and valves for air service shall have a temperature rating of 250°F. Valves shall be either wafer or lug design with cast iron body. Valve disc shall have an uninterrupted 360° seating surface and shall be aluminum bronze, ductile, or cast iron with an appropriately suitable edging. Shafts shall be one piece and shall be of hi-strength carbon steel with phosphate coating, or stainless steel. Shaft bearings shall be self-lubricating, and corrosion resistant. Packing materials shall be either adjustable or self-adjustable and shall be suitable for the intended temperature and service conditions. Manual butterfly valves 4" and smaller shall be provided with lever actuators. Manual butterfly valves 6" and larger shall be provided with geared actuators with handwheels. Valves shall be sized appropriately for the service conditions and specific application. Lever operated valves shall latch in the open, closed, or several intermediate positions. Gearboxes shall be self locking.

D. The electric motor operator shall consist of motor, reduction gearing, position limit switches and torque limiting switches mounted in a NEMA 4X/6 housing. Actuators shall be sized for 50 PSI working pressure. Actuators shall be supplied with local Open / Stop / Close pushbuttons, Local / Off / Remote selector switch, and Open / Close / Fault indicating lights. Open / close switches shall also be provided for hand operation of valves at the SBR control panel.

E. The motor shall be of the high torque type, designed for a minimum 15 minute duty rating. Motors and wiring shall have Class "B" or better insulation. Overload protection shall be provided by auto-reset thermal trip circuit breakers embedded in the motor windings. All motor leads shall be terminated at an internal terminal strip. Actuators shall be provided with integral motor starters (if required). All termination caps shall be plug and socket connection permitting removal without disturbing field wiring. Power for all automatic valves shall be the responsibility of the installing contractor. Valves shall not be powered from the SBR control panel.

F. The integral self-locking power gearing shall be compound epicyclic or combined helical and worm gear type only. Motor breakers are unacceptable. Gearing shall be grease or oil lubricated with high speed parts running on anti-friction bearings. Motor shall operate from open to full close in 60 seconds. Disassembly of gears shall not be required to remove the motor. Motor wiring shall be connected by plug and socket connection.

G. The handwheel shall not rotate during electrical operation. When the unit is being operated manually, it shall automatically return to electric operation when the actuator motor is energized. The transfer from electrical operation to manual operation shall be accomplished by a declutching mechanism, which will disengage the motor mechanically. The unit shall be capable of being clutched or declutched while the motor is energized with no damage to the clutch or gear mechanism. Clockwise rotation of the handwheel shall close the valve. If the motor is energized during manual operation, the unit shall remain in manual mode without endangering personnel operating the unit.

H. Failure of the motor or motor gearing shall not hinder manual operation. Limit switches set at the open and close positions shall be provided. Limit switch adjustment shall be possible with no more than 5 turns of the limit adjuster. Switches shall be mechanical and shall include provisions for powered or isolated contacts for remote indication.

I. A double-acting torque limiting switch shall be provided, which is responsive to the mechanical torque developed by seating or an obstruction. Torque shall be directly measured from the worm shaft through a series of compressible washers and mechanical torque arm and switch.

2.14 SUBMERSIBLE LEVEL TRANSMITTERS / ETWL FLOATS

A. One (1) submersible pressure level transmitter shall be provided for each SBR and Digester basin. Transmitters shall be rated IP 68 for permanent submersion in water and wastewater. Body material shall be stainless steel with 3 wire polyurethane shielded cable. Output shall be 4-20 mA with an accuracy of 0.25% of span. Transmitters shall be WIKA Model LS-10 or approved equal.

B. A 4" diameter schedule 40 PVC stilling well shall be provided to house each transmitter. Stilling wells shall contain equalization ports facing the wall and shall extend from a point six inches above the floor to a point six inches below the top of the wall. Mounting supports shall be provided by the manufacturer.

C. One (1) float switch shall be provided for each SBR basin. The float shall be mounted 12” above the normal TWL and shall indicate an emergency top water level condition. Float shall be Type S Roto Float as manufactured by Anchor Scientific, or equal. Mounting bracket shall be provided by the manufacturer.

2.15 PROCESS CONTROLS

A. SBR Control panel provider shall be Integrated Controls of Olathe, KS.

B. A process control panel to control sequencing and operation of the SBR equipment shall be provided by the SBR manufacturer. Control panel enclosure shall be rated NEMA 12 and shall be constructed of 12 gauge steel with ANSI 61 gray powder paint exterior finish

and white, polyester powder paint inside. Enclosure shall include 3 point latch with locking handle and thermoplastic data pocket.

C. A programmable logic controller (PLC) shall be utilized to control sequencing of the SBR. PLC shall include 750 kbytes of battery-backed static RAM, Ethernet IP port, RS232 port, and shall be capable of supporting up to 16 I/O modules. Power supply shall be DIN mounted, fused, rated for 120/220 VAC. Controller shall be Allen Bradley CompactLogix series as manufactured by Rockwell Automation.

D. Discrete I/O cards shall be 16 channel and analog I/O cards shall include 8 channels. All wiring to modules will terminate on terminal strip. Individual lamps for each input or output shall be provided on each card. A minimum of 10% spare I/O shall be provided.

E. Operator interface (OIT) shall be minimum 10" viewable TFT color touch screen with 26MB minimum of user memory. The OIT shall be able to display 64K colors in SVGA screen resolution (800x600) minimum. OIT's rated for less than NEMA 4X or with a backlight half-life of less than 50,000 hours are not acceptable. The operating temperature shall be 0-50 degrees C and the power consumption shall not exceed 18W at 24VDC. The OIT shall have a built-in Ethernet port, shall support Ethernet or USB connection for programming software and shall be able to utilize Ethernet or serial communication to the PLC. The Ethernet port shall also be able to be utilized for advanced features such as email, web serving, FTP access, and remote access as supplied. OITs that required additional software or hardware for these features must be provided configured to support this. USB connection for external USB drive and Optional CF card shall be supported for data logging.

F. Hand-Off-Auto (HOA) switches for rotating equipment and Open-Auto-Close (AOC) switches for valves shall be provided on the panel front to allow for manual control of equipment. LED indicating lights shall be provided to indicate status of equipment. Overload and seal fail indication for submersible equipment shall be provided.

G. Wiring. All wiring to module will terminate on terminal strip. Panel wiring shall be:
1. Type MTW, sized per applicable codes.
2. 16 gauge minimum wire size for 120 VAC.
3. 20 gauge minimum wire size for 24 VDC.

H. Wiring shall be color coded as follows:
1. 120 VAC (unswitched).....black
2. Neutral.....white
3. Ground.....green
4. +24 V.D.C. .....red
   24 V (return) .....blue
5. 120 VAC (switched).....yellow
6. Dry Contact (remote power).....orange

I. The operating software used to control the SBR shall utilize constant level measurement analysis to determine rate of influent flows and adjust treatment steps dynamically. The control system software shall measure rise rate in the SBR to determine flow rate as a percentage of normal design flow based on an operator adjustable flow averaging period. The process computer software shall be programmed to automatically adjust treatment steps and overall treatment cycle length to optimize treatment performance at all flow ranges between minimum and maximum flow conditions. Adjustments to treatment steps

shall be dynamic and not limited to pre-programmed "storm modes" designated to make stepped adjustments at designated peaking thresholds. The software shall also include provisions to automatically reconfigure tank set points when a tank is taken off line, allowing an operator to simply switch a tank from automatic to manual without the need to manually enter new set points for the remaining tanks. The software shall be capable of controlling up to 8 SBR tanks operating in sequence.

J. The SBR control software shall include a first response initiative which will automatically remove a tank from service in the event of a critical equipment failure. Selection of critical equipment shall be operator adjustable on a tank by tank basis. First response shall be initiated 5 minutes following the critical equipment failure to allow the operator time to respond. The software shall automatically re-adjust cycle structures in the remaining tanks in the event a tank is automatically taken offline. The first response software feature shall be capable of being enabled / disabled by the operator. Software shall also include a provision to automatically initiate corrective action in the event the emergency top water level float switch is tripped indicating a potential failure of the level transmitter.

2.16 D.O. CONTROL

A. A dissolved oxygen control system shall be provided by the SBR system manufacturer. The D.O. control system shall utilize operator adjustable D.O. setpoints to control blower on / off operation during the aeration period. One (1) D.O. probe with mounting bracket and one (1) analyzer shall be provided for each SBR basin. Probes shall be continuous reading type utilizing luminescent sensor technology. Probes shall be Hach LDO with Hach SC200 analyzer, or equal.

PART 3 EXECUTION

3.1 FIELD SERVICE

A. The SBR system manufacturer shall provide on-site services as outlined below. A written service report shall be provided following dry inspection and wet start up. Contractor shall be responsible for correcting any deficiencies identified during the service visits.

Table 3.0a Manufacturer service requirements

Dry inspection	One trip / 2 man days
Wet start up	Two trips / 8 man days
Post start up	One trip / 2 man days

END OF SECTION

THIS PAGE INTENTIONALLY LEFT BLANK FOR DOUBLE SIDED PRINTING

SECTION 46_66_57

UV DISINFECTION EQUIPMENT

PART 1 GENERAL

1.1 SUMMARY

A. Furnish all labor, materials, equipment and appurtenances required to provide an open channel, gravity flow, and low pressure high intensity ultraviolet lamp (UV) disinfection system complete with an automatic chemical/mechanical cleaning system and variable output lamp drivers. The UV system shall be complete and operational with all control equipment and accessories as shown and specified herein. This system will be capable of disinfecting effluent to meet the water quality standards listed in this section.

1. Northside WWTP – 4 units (3 duty, 1 redundant)
2. TrojanUVSigna™, as manufactured by Trojan Technologies
3. Current Peak Flow: 12 MGD
4. Average Flow: 4.50 MGD
5. Minimum Flow: 1 MGD
6. Total Suspended Solids: 30 mg/L, 30 Day Average grab samples
7. Effluent Temperature Range: 33 to 85 F (1 to 30 C)
8. Ultraviolet Transmittance @ 253.7 nm: 65%, minimum
9. Effluent standards to be achieved: 200 Fecal Coliform/100 ml based on a 30 day Geometric Mean of daily samples for the effluent standard as specified in a) through f).
10. Effluent standards will be guaranteed regardless of influent count to UV system
11. The UV system must fit within the UV channel(s) as indicated on the Drawings without modification. Verify exact dimension on Drawings prior to bid.

B. Spare Parts

1. One (1) complete set of replacement UV lamps for each of the specified units (4 sets total)
2. 16 Quartz Sleeves
3. 32 Lamp Wiper Seals
4. 4 Operators Kit that includes UV-resistant face shield, gloves and cleaning solution.

C. The ultraviolet disinfection system will be purchased from Trojan Technologies by the Contractor. The system to be installed by the Contractor and tested and commissioned by Trojan Technologies, as specified in this section. The Owner will consider alternates if all requirements of this specification are met without exception including Pre-qualification Requirements in section 1.2 Quality Assurance.

D. All listed iron and steel products used in this project must be produced in the United States. The term "iron and steel products" means the following products made primarily of iron or steel: lined or unlined pipes and fittings, manhole covers and other municipal castings, hydrants, tanks, flanges, pipe clamps and restraints, valves, structural steel, reinforced precast concrete, and construction materials. The deminimis and minor components waiver apply to this contract for minor components.

1.2 RELATED SECTIONS

A. Section 01_00_01 Basic Requirements

B. Section 01_33_01 General Submittal Requirements

C. Section 01_33_02 Pre-bid Equipment Submittal Requirements

D. The Contract Documents are a complete unit and complementary to each other. The individual Specification sections and other Contract Documents do not contain all cross references to "related work" or "related sections." It is the Contractor's responsibility to review the complete Contract Documents in order to properly scope, schedule and coordinate the work of any/all subcontractors, suppliers, and others on this project. Anything called out in one location of the Contract Documents is binding as if it were called out in all sections of the Contract Documents.

1.3 SUBMITTALS

A. Submittals for products and miscellaneous items in this specification section shall be submitted in accordance with Section 01_33_01 General Submittal Requirements and related submittal sections and provisions of the Contract Documents showing at a minimum:
1. Complete description in sufficient detail to permit an item comparison with the specification.
2. Dimensions and installation requirements.
3. Descriptive information including catalogue cuts and manufacturers' specifications for major components.
4. Electrical schematics and layouts.
5. Hydraulic calculations demonstrating compliance with the required hydraulic characteristics.
6. Independent bioassay validation and dosage calculations demonstrating compliance with the specified RED requirements.
7. Lifetime disinfection performance guarantee.

1.4 QUALITY ASSURANCE

A. Pre-qualification Requirements: Any alternate UV manufacturer that is not named or listed as approved equal must submit the following 15 days prior to bid to be considered for approval:
1. The manufacturer will be regularly engaged in the design, manufacture and servicing of UV systems for municipal wastewater disinfection. Manufacturer to submit evidence of a proven track record with at least five hundred (500) operating UV installations at municipal wastewater treatment plants over a design flow of 10 MGD (1577 m3/hr).
2. The manufacturer will provide documentation of previous experience with municipal UV disinfection systems in wastewater applications with variable output electronic drivers and automatic cleaning systems.
3. For evaluation, the manufacturer will submit a reactor (bioassay) validation report and calculation justifying the sizing for the proposed reactor, without exception. The bioassay will have been completed by an independent third party and have followed applicable sections and protocols described in the NWRI Ultraviolet

Disinfection Guidelines for Drinking Water and Water Reuse (2003, 2012) and 2006 USEPA Ultraviolet Disinfection Guidance Manual (UVDGM). The bioassay must demonstrate that the proposed UV system design and number of lamps will deliver the specified Reduction Equivalent Dose (RED) based on the water quality and operating conditions specified herein.

4. Independent certification of the lamp aging factor must be submitted if values other than the specified default values are being proposed. The lamp aging (or end-of-lamp-life) factor must be determined using the protocol described in the NWRI Ultraviolet Disinfection Guidelines for Drinking Water and Water Reuse (2003, 2012).
5. Independent certification of the fouling factor shall only be accepted if performed on the UV lamp and quartz sleeve combination equal to that being proposed by the UV manufacturer. The fouling factor must be conducted on municipal wastewater effluent using the protocol described in the NWRI Ultraviolet Disinfection Guidelines for Drinking Water and Water Reuse (2003, 2012).
6. Documentation of UV manufacturer's service capabilities including location and experience.
7. Sample of lifetime disinfection performance guarantee including scope and duration of guarantee.
8. Pre-qualification submittals from manufacturers will include a complete and detailed proposal of equipment offered, including the number of lamps proposed, bioassay calculation and a detailed description of all exceptions taken to the specification.
9. All UV manufacturers will be required to pre-qualify, unless the manufacturer is the base bid manufacturer.

B. Design Criteria:

1. Provide equipment that will disinfect effluent with the following characteristics:
   a. Current Peak Flow: 12 MGD
   b. Average Flow: 4.50 MGD
   c. Minimum Flow: 1 MGD
   d. Total Suspended Solids: 30 mg/L, 30 Day Average grab samples
   e. Effluent Temperature Range: 33 to 85 F (1 to 30 C)
   f. Ultraviolet Transmittance @ 253.7 nm: 65%, minimum
   g. Effluent standards to be achieved: 200 Fecal Coliform/100 ml based on a 30 day Geometric Mean of daily samples for the effluent standard as specified in a) through f). Effluent standards will be guaranteed regardless of influent count to UV system.
2. The UV system is to be installed in 1 open channel(s) having the following dimensions unless otherwise indicated on drawings (not including the water level controller):
   a. Length: 35.6 feet
   b. Width: 2.9 feet
   c. Depth: 7.8 feet
3. System configuration:
   a. The UV system must fit within the UV channel(s) as stated without modification. Verify exact dimension on Drawings prior to bid.
4. The UV system configuration will be as follows:
   a. Number of Channels: 1
   b. Number of Banks per Channel: 4 (3 Duty, 1 Redundant)
   c. Lamps per Bank: 10

d.	Total Number of Lamps in the UV System:	40
e.	Number of System Control Centers:	1
f.	Number of UV Sensors:	1 per bank
g.	Number of Power Distribution Centers:	1
h.	Number of Level Controllers:	1

C. Performance Requirements:

1. Provide a UV disinfection system complete with UV Banks and lifting mechanism, System Control Center, Power Distribution Centers, and Water Level Controller(s) as shown on the contract drawings and as herein specified.
2. The ultraviolet disinfection system will produce an effluent conforming to the following discharge permit: 200 Fecal Coliform/100 ml, based on a 30 day Geometric Mean. Grab samples will be taken in accordance with the Microbiology Sampling Techniques found in Standard Methods for the Examination of Water and Wastewater, 21st Ed.
3. The UV system will be designed to deliver a minimum RED of 30 mJ/cm2 MS2 at peak flow, in effluent with a UV Transmission of 60% at end of lamp life (EOLL) after reductions for quartz sleeve fouling. The basis for evaluating the RED will be the independent third party bioassay, without exception. Bioassay validation methodology to follow applicable protocols described in NWRI Ultraviolet Disinfection Guidelines for Drinking Water and Water Reuse (May 2003, 2012) and 2006 USEPA UVDGM.
4. The RED will be adjusted using an end of lamp life factor of 0.5 to compensate for lamp output reduction over the time period corresponding to the manufacturer's lamp warranty. The use of a higher lamp aging factor will be considered only upon review and approval of independent third party verified data that has been collected and analysed in accordance with protocols described in the NWRI Ultraviolet Disinfection Guidelines for Drinking Water and Water Reuse (May 2003, 2012).
5. The RED will be adjusted using a quartz sleeve fouling factor of 0.8 to compensate for quartz sleeve transmission reduction due to wastewater effluent fouling. The use of a higher quartz sleeve fouling factor will be considered only upon review and approval of independently verified data that has been collected and analysed in accordance with protocols described in the NWRI Ultraviolet Disinfection Guidelines for Drinking Water and Water Reuse (May 2003, 2012). The data recorded for the determination of the validated fouling factor must be obtained by testing in secondary wastewater effluent utilizing the same lamp, quartz sleeve and cleaning system proposed by the UV manufacturer.
6. Independent validation for use of higher factors (lamp aging and sleeve fouling) must be submitted to the Engineer for consideration a minimum of fifteen (15) days prior to bid. The independent validation shall have oversight by a qualified registered professional engineer with knowledge and experience in testing and evaluation of UV systems as defined in the EPA UVDGM (Appendix C, Section C.3.3)
7. The system will be designed for complete outdoor installation.

1.5 WARRANTY

A. The manufacturer shall warrant the equipment to be of quality construction, free from defects in materials and workmanship. The warranty shall become effective upon acceptance of the project by the Owner (after completion of final inspection.)

B. The equipment, apparatus, and parts furnished shall be warranted from a period of one (1) year from date of final acceptance by owner, excepting only those items that are normally consumed in service, such as oil, grease, gaskets, o-rings, etc. The manufacturer shall be solely responsible for the warranty of the equipment and all components.

C. Upon request from the Engineer and/or the Owner, the manufacturer shall demonstrate proof of financial responsibility with respect to performance and delivery date. In addition, the manufacturer shall provide proof of evidence of facilities, equipment, and skills required to produce the equipment specified herein and provide technical service and replacement parts.

D. Components failing to perform as specified by the Engineer, or as represented by the manufacturer, or proven defective in service during the warranty period, shall be replaced, repaired, or satisfactorily modified by the manufacturer without cost of kind to the Owner.

E. It is not intended the manufacturer assume liability for consequential damages or contingent liabilities arising out of failure of any product or parts thereof to operate properly, however caused by or resulting from or arising out of defects in design or manufacture, delays in delivery, replacement, or otherwise.

F. UV Lamps:
1. The UV lamps will be warranted for a minimum of 15,000 hours when operated in automatic mode, prorated after 9,000 hours. On/off cycles are limited to an average of four (4) per day accumulated over the guaranteed life of the lamp.

G. Lamp Drivers:
1. Lamp drivers will be warranted for 10 years, prorated after 1 year.

H. UV Intensity Sensors:
1. UV Intensity Sensors will be warranted for 5 years, prorated after 1 year.

PART 2 PRODUCTS

2.1 MANUFACTURER

A. The physical layout of the system shown on the contract drawings and the equipment specified herein are based on the TrojanUVSigna™, as manufactured by Trojan Technologies, London, Ontario, Canada.

B. If other equipment is proposed, the Contractor will demonstrate to the Engineer and the Owner that all requirements of materials, performance, and workmanship have been met or exceeded by the equipment proposed. Contractors proposing alternate manufacturers will be responsible for all costs associated with system evaluation and redesign including all electrical, mechanical and civil aspects of the installation.

2.2 DESIGN, CONSTRUCTION AND MATERIALS

A. General:
1. All UV Bank metal components in contact with effluent will be Type 316 stainless steel.

2. All wiring exposed to UV light will be Teflon™ coated.

B. Lamp Array Configuration:
1. The lamp array configuration will be in a staggered inclined arrangement.
2. The system will be designed for complete submersion of the UV lamps under all flow conditions including both electrodes and the full length of the lamp arc.
3. To maximize performance and ensure safety, bank light locks will be used in each bank to prevent potential short circuiting over the top of the lamps.
4. For any UV inclined system that does not contain UV bank light locks to prevent short circuiting, the system shall be supplied with 1 additional UV bank to compensate for short-circuiting over the top of the lamps.

C. UV Bank:
1. Each UV bank will consist of UV lamps, quartz sleeves and an automatic chemical/mechanical cleaning system mounted in a Type 316 stainless steel frame.
2. Each lamp will be enclosed in its individual quartz sleeve, one end of which will be closed and the other end sealed by a lamp end seal. To be considered as an alternate, lamp quartz sleeves that are open at both ends will be supplied with twice the amount of specified spare seals and lamps.
3. The closed end of the quartz sleeve will be held in place by a retaining O-ring. The quartz sleeve will not come in contact with any steel in the frame.
4. Each UV bank will contain a pre-formed Type 316 stainless steel wall on each side to prevent possible short-circuiting at the side walls of the reactor.
5. Each UV bank will contain light locks at the top of the bank to prevent short circuiting over the top of the lamps and maximize disinfection efficiency.
6. Each UV bank will be rated Type 6P. UV banks that are not Type 6P rated are not acceptable.
7. To minimize maintenance, equipment must be provided by the UV manufacturer to enable lifting a complete bank of lamps from the channel at once for inspection and/or servicing.

D. UV Lamps:
1. Lamps will be high intensity low pressure amalgam design. Lamps that are not amalgam will not be allowed.
2. The filament shall be significantly rugged to withstand shock and vibration.
3. Electrical connections for the lamp will consist of four (4) pins at one end of the lamp only. Lamp wiring shall be Teflon insulated stranded wire.
4. Lamps without maintenance coating or that do not have four (4) pins are considered instant-start and are not acceptable due to reduced reliability and increased maintenance and operating costs.
5. Lamps will be rated to produce zero levels of ozone.
6. The lamp shall withstand an average of four (4) on/off cycles per day without reducing lamp life, warranty or causing any damage to the lamp.
7. Lamps will be operated by electronic lamp drivers with variable output capabilities ranging from 30% to 100% of nominal power. The lamp assembly shall incorporate active filament heating to maintain a minimum lamp efficiency of 35% across varying water temperatures and between the minimum and maximum stated lamp power levels.

E. Lamp Plugs:

1. Each lamp plug will be accessible from the top of the UV bank to facilitate lamp removal without moving the UV banks or any other components.
2. Each lamp plug shall have provisions for a light emitting diode (LED) visual indicator that indicates on/off status for each lamp.
3. An integral safety interlock in the lamp plug will prevent removal of energized lamps.
4. The lamp plug shall be rated Type 6P.

F. Lamp Drivers:
1. Each lamp driver will independently power two (2) UV lamps. Failure of one lamp will not affect operation of the other lamp.
2. The lamp driver will have a power factor correction circuit to ensure minimum 99% power factor and less than 5% total harmonic distortion (THD) current at the maximum power level and nominal input voltage.
3. The lamp driver electrical efficiency will be minimum 95% at the maximum power level.
4. The lamp driver will be programmed-start type utilizing filament preheat followed by a high voltage pulse to ignite the lamp.
5. During lamp operation, variable filament heating current shall be provided according to a predetermined curve to maintain optimum filament temperature and amalgam temperature to ensure maximum lamp life and maintain a minimum lamp efficiency of 35% across varying water temperatures and between the minimum and maximum stated lamp power levels.
6. A ground fault in the output circuit shall be detected and communicated as a warning to the external controls system while the corresponding lamp operates undisturbed.
7. The communication protocol shall be Modbus implemented on an RS485 electrical interface.
8. Local visual diagnostic will be provided with LEDs for lamp driver status, lamp status (on, idle, preheat, fault), power and communication status.
9. For reliability and to facilitate trouble shooting, at a minimum, the following external indicators (protections, status, warnings and alarms) shall be provided: lamp status, driver status, ground fault, and communication time-out.
10. The lamp driver shall be UL, CE, and RoHS compliant.

G. Quartz Sleeves:
1. Quartz sleeves will be clear fused quartz circular tubing containing 99.9% silicon dioxide.
2. Sleeves will have minimum UV transmittance at 254nm of 87% (2.5mm wall thickness).
3. Sleeves will be open at one end only and domed at the other end.

H. Cleaning System:
1. An automatic in-situ cleaning system will be provided to clean the quartz sleeves using both chemical and mechanical methods. Wiping sequence will be automatically initiated with capability for manual override.
2. The cleaning system shall also incorporate an integrated debris removal device to clear the quartz sleeves of any large solids or debris to maximize the life of the chemical/mechanical cleaning system.
3. The wiper on the cleaning system shall be parked out of the effluent when not in use.

4. Cleaning systems that utilize a screw drive, or park the wiper in the effluent while not in use shall not be acceptable due to collection of debris in and around the wetted parts of the wiper.
5. The cleaning system will be fully operational while UV lamps and modules are submerged in the effluent channel and energized.
6. To minimize maintenance, UV System will be designed such that cleaning solution replacement can be performed while the UV Bank and lamps are in place and operational in the channel.
7. Cleaning sequence frequency will be field adjustable to enable optimization with effluent characteristics.
8. Cleaning system operation will be remote auto (default) or remote manual.
9. The cleaning system will be provided with the required solutions necessary for initial equipment testing and for equipment start-up.
10. The wipers shall travel the full length of the UV lamp arc. Designs in which the wipers only travel part way along the sleeves will not be acceptable.
11. The UV intensity sensor shall be cleaned utilizing the same chemical/mechanical cleaning method as that of the lamp quartz sleeves. UV intensity sensors that only utilize a mechanical means shall not be acceptable.
12. To be considered as alternate, systems that use only mechanical wiping must have the ability to periodically be cleaned out of channel using a chemical bath. Out of channel cleaning will include lifting slings, removable banks, cleaning tanks, agitation system and air compressors, as required. The UV manufacturer will be responsible for supplying all equipment including any equipment not specifically listed required to perform out of channel chemical cleaning. Contactor will be responsible for installation.

I. Effluent Level Controller:
   1. Level Control Weir
      a. To be located at the discharge end of the UV channel.
      b. Weir will be designed to maintain the minimum channel effluent level required to keep lamps submerged at all times.
      c. Weir to be constructed of Type 304 stainless steel.

J. Light Locks
   1. Light locks, two (2) per bank, will be provided to force effluent through the UV treatment zone maximizing disinfection performance.
   2. The entire length of the lamp arc will remain submerged to maximize UV dose delivered to the effluent and to prevent any UV exposure above the water free surface.

K. Electrical:
   1. All applicable electrical components will be UL-listed to ensure safety standards are met.
   2. Each UV lamp within a bank will be powered from a Power Distribution Center.
   3. UV Manufacturer to supply all cabling between lamps and drivers.
   4. Each electronic lamp driver will power two lamps.
   5. Power factor will not be less than 99% leading or lagging.
   6. Electrical supply to each Power Distribution Center will be 480/277V 60Hz, 45.0 kVA.
   7. Electrical supply to the Hydraulic System Center will be 480V 60Hz, 2.5 kVA

8. Electrical supply to the low water level sensor box will be from 120V, 1 Phase, 2 Wire + GND.
9. Electrical supply to the System Control Center will be 120V 60Hz, 1.8 kVA

L. Power Distribution Center (PDC):
1. The configuration of Power Distribution Centers shall be lamps per pdc.
2. PDC enclosure material will be 304 Stainless Steel.
3. All internal components will be sealed from the environment.
4. All Power Distribution Centers to be UL approved or equivalent.
5. An internal heater will be provided in the PDC to prevent condensation when the external temperature drops below the dew point.
6. Each PDC shall be able to electrically isolate each bank of lamp drivers and safely replace a lamp driver without de-energizing any other operating banks.

M. Hydraulic System Center:
1. The Hydraulic System Center (HSC) houses the components required to operate the automatic cleaning system and bank Automatic Raising Mechanism (ARM).
2. HSC enclosure material will be 304 Stainless Steel (Type 4X, IP 66) (Type 4X).
3. The HSC will contain hydraulic power unit complete with pump, fluid reservoir, manifolds, valves and filter.

N. Control and Instrumentation:
1. System Control Center (SCC):
   a. The monitoring, operation and control of the TrojanUVSigna is managed at the System Control Center (SCC) by a CompactLogix with a SCC HMI Beijer -12" (Outdoor 4X Rated) HMI screen.
   b. If the SCC is installed outdoors, the operator interface shall be positioned out of or away from direct sunlight and shall include a sunshade. The operator interface screen will be designed for a rugged outdoor environment capable of operating at ambient temperatures between -30 Deg C and +70 Deg C with a high brightness display (minimum 1000 Nit). HMI screen shall be certified for outdoor use (UL50E Type 4X Outdoor)
   c. Alarms will be provided to indicate to plant operators that maintenance attention is required or to indicate an extreme alarm condition in which the disinfection performance may be jeopardized. The alarms will include, but not be limited to:
      1) Individual Lamp Failure
      2) Multiple Lamp Failure
      3) Low UV Intensity
      4) Bank Communication Alarm
   d. The 100 most recent alarms will be recorded in an alarm history register and will be displayed when prompted.
   e. Mode of operation for UV Banks can be manual, automatic or remote.
   f. Elapsed time of each bank will be recorded and displayed on the display screen when prompted.
2. Low Water Level Sensor:
   a. The UV Manufacturer will provide one (1) low water level sensor for each UV channel.
   b. During all modes of system operation (manual, automatic and remote), the water level sensor will ensure that lamps extinguish automatically if the water level in the channel drops below an acceptable level.

3. UV Intensity Sensors:
    a. A UV sensor will continuously monitor the UV intensity produced within each UV Bank.
    b. The sensors will measure only the germicidal portion of light emitted by the lamps.
    c. The UV sensor shall be factory-calibrated to US National Institute for Standards and Technology (NIST). Sensors requiring field-calibration are not acceptable.
    d. The sensor shall be digitally calibrated to ensure calibration accuracy.
    e. To ensure continuous disinfection, the sensor shall be accessible without shutting down the system, lifting a bank/module or removing lamps.
    f. Sensors will be designed to provide UV intensity data for dose monitoring and control functions. Dose pacing program will enable use of measured UV intensity along with flow rate and UVT to determine the delivered dose during operation.
    g. Sensors will be designed such that reference sensor readings can be taken without interrupting disinfection and without removing UV lamps, banks/modules or sleeves.
4. Dose-Pacing:
    a. A dose-pacing system will be supplied to modulate the lamp UV output in relationship to a 4-20 mA DC signal from an effluent flow meter (supplied and installed by Others) and UV intensity sensor(s).
    b. The system to be dose-paced such that as the flow and effluent quality change, the design UV dose is delivered while conserving power.
    c. The dose-pacing system will allow the operator to vary the design dose setting. Logic and time delays will be provided to regulate UV Bank ON/OFF cycling.

O. UV Bank Lifting Device:
1. The lifting device for UV Banks will be supplied by the UV Manufacturer.
2. An Automatic Raising Mechanism (ARM) will be designed and supplied to facilitate lifting a UV bank from the channel without use of ancillary equipment.
3. The ARM will be integrated into the UV Bank for simple and seamless operation.
4. The UV Bank will be raised from the channel for easier access and maintenance.
5. The ARM design will provide access to components without having to break electrical connections thus reducing wear on connectors.

P. Spare Parts:
1. The following spare parts and safety equipment will be supplied.
2. One (1) complete set of replacement UV lamps for each of the specified units (4 sets total)
3. 16 Quartz Sleeves
4. 32 Lamp Wiper Seals
5. 4 Operators Kit that includes UV-resistant face shield, gloves and cleaning solution.

PART 3 EXECUTION

3.1 3.1 INSTALLATION

A. In accordance with contract drawings, manufacturers' shop drawings, instructions and installation checklist. Contractor Installation Checklist to be completed and returned at least two (2) weeks prior to date requested for commissioning. Photographs illustrating site readiness are required. The Contractor assumes all responsibility for the installation readiness of the UV system.

B. All labor, materials and test apparatus necessary for completing the installation shall be furnished by the Contractor at no additional cost to the Manufacturer.

3.2 MANUFACTURER'S SERVICES

A. Installation assistance only provided if in scope.

B. Start-up and field testing
1. Start-up and Field Services will only be scheduled upon written request. Contractor shall notify Trojan of schedule requirements at least ten (10) working days in advance.

C. Operator Training
1. Comply with training requirements as outlined in Specifications.

D. Warranty Service: As outlined in the warranty agreement. Anything in the Contract Documents that conflict with warranty agreement, Contract Documents govern.

END OF SECTION

THIS PAGE INTENTIONALLY LEFT BLANK FOR DOUBLE SIDED PRINTING

SECTION 46_76_21.03

BELT FILTER PRESS SYSTEM

PART 1 GENERAL

1.1 SUMMARY

A. This specification section covers the labor and materials necessary to furnish and install all equipment required to provide a complete and operable system belt filter press system as described herein.
   1. Northside WWTP – 2 Units; Komline-Sanderson Model GRSL-2 Series III
   2. Spare Parts:
      a. Eight complete set of dewatering belts
      b. Eight complete set of dewatering blades
      c. Four complete set of containment seals
      d. Four complete set of washwater box seals
      e. Eight press roller bearing of each different size used
      f. Six fuses of each size used
      g. Two oil filters for the hydraulic power unit

B. Components shall be of the same manufacturer or supplier to obtain standardization of performance, operation, spare parts, maintenance and manufacturer's services.

C. The Contractor shall furnish and install all equipment required to provide a complete and operable system as described herein.

D. All listed iron and steel products used in this project must be produced in the United States. The term "iron and steel products" means the following products made primarily of iron or steel: lined or unlined pipes and fittings, manhole covers and other municipal castings, hydrants, tanks, flanges, pipe clamps and restraints, valves, structural steel, reinforced precast concrete, and construction materials. The deminimis and minor components waiver apply to this contract for minor components.

1.2 RELATED SECTIONS

A. Section 01_00_01 Basic Requirements

B. Section 01_33_01 General Submittal Requirements

C. Section 01_33_02 Pre-bid Equipment Submittal Requirements

D. The Contract Documents are a complete unit and complementary to each other. The individual Specification sections and other Contract Documents do not contain all cross references to "related work" or "related sections." It is the Contractor's responsibility to review the complete Contract Documents in order to properly scope, schedule and coordinate the work of any/all subcontractors, suppliers, and others on this project. Anything called out in one location of the Contract Documents is binding as if it were called out in all sections of the Contract Documents.

1.3 SUBMITTALS

A. Submittals for products and miscellaneous items in this specification section shall be submitted in accordance with Section 01_33_01 General Submittal Requirements and related submittal sections and provisions of the Contract Documents and shall at a minimum included:

1. Detailed specifications
2. Equipment agreement
3. Detailed electrical data (as applicable)
4. Installation instructions
5. Written warranty
6. Equipment storage requirements
7. Any other information relating to delivery, storage, installation , operations and maintenance of the equipment

1.4 REFERENCES

A. The Contractor and/or Manufacturer shall follow the standards listed below, except as otherwise specified herein. The latest revision or edition in effect at the time of bid opening shall be utilized.

1.5 DELIVERY, STORAGE & HANDLING

A. Equipment shall be delivered to the jobsite completely factory assembled in accordance with manufacturer's recommendations. Individual equipment components shall be crated in structurally adequate packing containers to prevent damage during shipping, facilitate ease of handling and to provide suitable protection from weather for extended storage at the jobsite prior to installation. Packing containers shall be permanently labeled with appropriate equipment identification, shipping address and return address and packing list shall be provided with equipment at time of delivery.

B. Equipment shall be kept thoroughly dry at all times and shall be stored indoors. Equipment storage shall be protected and maintained in accordance with the manufacturer's recommendations. Equipment shall not be stored directly on the ground.

C. Contractor shall utilize equipment and tools of adequate size suitable for unloading, transporting, storing and supporting the equipment during installation. Caution shall be employed to prevent equipment damage resulting from abrupt contact with other materials or equipment. The Contractor shall be responsible for equipment damaged during unloading transportation and storing at no additional cost to the Owner.

1.6 QUALITY ASSURANCE

A. Equipment furnished and installed under this section shall be fabricated, assembled, erected, and placed in proper operating condition in full conformity with drawings, specifications, Engineering data, instruction, and recommendations of the equipment manufacturer unless exceptions are noted by the Engineer. The equipment manufacturer must have at least five (5) of similar size installed and operating in the State of Oklahoma for a minimum of five (5) years. Equipment and associated appurtenances shall be provided by the same supplier.

B. Acceptable Manufactures/suppliers
   1. Komline-Sanderson

1.7 WARRANTY

A. The manufacturer shall warrant the equipment to be of quality construction, free from defects in materials and workmanship. The warranty shall become effective upon acceptance of the project by the Owner (after completion of final inspection.)

B. The equipment, apparatus, and parts furnished shall be warranted from a period of one (1) year, excepting only those items that are normally consumed in service, such as oil, grease, gaskets, o-rings, etc. The manufacturer shall be solely responsible for the warranty of the equipment and all components.

C. Upon request from the Engineer and/or the Owner, the manufacturer shall demonstrate proof of financial responsibility with respect to performance and delivery date. In addition, the manufacturer shall provide proof of evidence of facilities, equipment, and skills required to produce the equipment specified herein and provide technical service and replacement parts.

D. Components failing to perform as specified by the Engineer, or as represented by the manufacturer, or proven defective in service during the warranty period, shall be replaced, repaired, or satisfactorily modified by the manufacturer without cost of kind to the Owner.

E. It is not intended the manufacturer assume liability for consequential damages or contingent liabilities arising out of failure of any product or parts thereof to operate properly, however caused by or resulting from or arising out of defects in design or manufacture, delays in delivery, replacement, or otherwise.

PART 2 PRODUCTS

2.1 BELT FILTER PRESS

A. The contractor shall furnish and install two (2) belt filter press complete with sludge conditioning unit, hydraulic power unit, belt washwater booster pump, electrical control panel, and spare parts as specified herein and shown on the drawings for the dewatering of aerobically digested sludge. Each press shall have an effective belt width of 2.0 meters with a measured belt width of 2.2 meters. In addition, the contractor shall furnish and install all necessary valves, interconnecting piping and wiring, instrumentation, anchor bolts and other necessary appurtenances for a complete and operating installation.

B. Each belt filter press shall be of the continuous belt design with three distinct dewatering zones including an extended length gravity dewatering zone, an adjustable wedge or low pressure zone and a shear/pressure zone and shall consist of a structural frame, dewatering belts, an inlet distributor, belt support/wiper bars, drainage elements, drums, rollers, bearings, discharge blades, a belt drive unit, belt tracking and tensioning systems, a belt wash system and a filtrate/belt washwater drainage system. Each belt filter press shall be factory assembled including all internal piping, valving, wiring and control devices and shall be shipped as a complete assembly except that the dewatering belts shall be shipped separately in suitable containers to prevent accidental damage.

C. The manufacturer shall have a belt filter press of the type specified herein successfully operating for a minimum of five years in each of at least ten wastewater treatment plants in the USA. Manufacturers who cannot meet this experience requirement shall furnish the owner a bond in the amount of 150% of the belt filter press equipment cost which will provide for replacement of the equipment if necessary within the first five years of operation.

D. Compliance with the performance requirements of the specifications will not relieve the contractor of his responsibilities of supplying equipment having the specified structural, mechanical, corrosion resistant and operational features. Deviations from the requirements specified shall not be permitted.

2.2 PERFORMANCE REQUIREMENTS

A. Each belt filter press shall be capable of operating satisfactorily under the following performance conditions:
1. Type of sludge: Aerobically digested WAS.
2. Sludge feed concentration: Range 1 % dry solids, average 0.5 % dry solids.
3. Hydraulic throughput, solids throughput, cake solids concentration, solids capture (combined filtrate and washwater) and polymer use requirements:

Feed Solids %	Hydraulic Throughput GPM	Solids Throughput Lbs DS/hr	Cake Solids %	Solids Capture %	Polymer Use Lbs
0.5-2.0	140	1,400	16	95	10

2.3 BASIS OF DESIGN

1. The plans and specifications have been prepared based on an extended gravity section belt filter press and appurtenances. If alternate equipment is proposed which requires an arrangement differing from that shown on the plans or if the details of design and construction are different from those specified, the contractor shall prepare and submit for review the necessary design calculations along with the necessary structural, electrical, instrumentation, mechanical and architectural drawing revisions. The manufacturer shall prepare and submit for review along with the required shop drawings, a specific listing of the material, design and construction differences between the proposed equipment and the specified equipment. All work associated with accommodating alternate equipment shall be at no additional cost to the owner even if the proposed substitution is rejected.

2.4 GENERAL SYSTEM REQUIREMENTS

A. After proper flocculation of the sludge with polymer, initial dewatering shall occur by gravity drainage through a filter belt traveling horizontally along the press. Further dewatering shall occur by squeezing the sludge between two tensioned pressure belts, first through a wedge zone then over and under a minimum of eight drums forcing entrained water from the sludge through both pressure and shear action. Dry cake discharge shall be assisted by doctor blades at each belt. Each belt shall be subsequently washed with high pressure, low volume water from spray headers before it returns to the head of its section of the

press. Washwater and filtrate shall be collected in drain pans for direction to a curbed concrete drainage basin surrounding the press.

B. The equipment furnished shall be designed and constructed in accordance with the best practices and methods and for continuous service at maximum conditions. All parts shall be so designed and proportioned as to have liberal strength, stability and stiffness and to be fully suitable for the intended conditions of service. Provisions shall be made for easy lubrication, adjustment or replacement of all parts. Corresponding parts of multiple units shall be interchangeable. Except as otherwise specified, steel plates and shapes shall have a minimum thickness of 3/8 inch, sheet metal shall be 14 gauge minimum and bolts shall be 1/2 inch diameter minimum. All welding shall be in accordance with the latest applicable codes of the American Welding Society. All materials used shall be of the best quality and fully suitable in every respect for the service intended. Unless otherwise specified, all materials in direct contact with sludge, polymer or filtrate shall be type 316 stainless steel or plastic. All fasteners shall be type 316 stainless steel.

2.5 SLUDGE CONTROL SYSTEM

A. Each sludge conditioning system shall consist of an in line polymer injection ring, a variable orifice venturi type mixing valve and a press mounted flooded bottom distribution system for final flocculation as well as even distribution of sludge across the full width of the press.

B. The polymer injection ring shall be of the multiport type to assure optimum polymer usage, shall be of polyethylene construction and shall be supplied with a polyethylene injection manifold complete with tubing and fittings for distributing polymer to the injection points on the ring. The mixing valve shall be of cast type 316 stainless steel construction and shall include provisions to vary the throat area through an external adjustably weighted lever arm for most effective instantaneous polymer/sludge mixing. The mixing valve shall also include a removable inspection cover.

C. Each injection ring and mixing valve shall form a sludge/polymer mixing assembly which shall be located directly in the sludge feed line. The contractor shall provide spool pieces to simulate the mixing assembly at two additional locations in each sludge feed line to allow for repositioning the mixing assembly for most effective floc formation. The contractor shall also provide the necessary polymer piping and valving to accommodate the alternate mixing assembly locations.

D. The flooded bottom distribution system shall be mounted on the feed end of the press and shall be sized to provide an adequate residence time for effective floc formation. The distribution system shall consist of a lower inlet section or feed hopper and an upper distribution and exit section. All parts of the system shall be constructed of type 316 stainless steel. Sludge shall directly overflow the hopper onto the full width of the distribution section. The sludge inlet line to the tank shall incorporate a means of draining the feed hopper. The hopper shall also be provided with a drain connection. The contractor shall provide a quick opening valve and PVC piping to the drain basin below. No mechanical or static mixing devices shall be included in the hopper or distributor as such devices become fouled and require frequent cleaning.

2.6 PRESS FRAME

A. Each side frame shall be constructed of welded members formed from 3/8 inch thick ASTM A36 structural steel plate. A minimum of five cross members shall be bolted to the side frames to form a rigid structure, properly stiffened for supporting the belt press rollers and other components and to withstand the applied loading without deflection, deformation or vibration during operation. All mainframe members shall be 7 inch channel shapes with minimum moment of inertia of 44 inches4. Channel flanges shall be turned out to allow for convenient and thorough washdown. Frame construction shall allow easy access to and visual contact with all internal press components.

B. The frame shall have minimum safety factors of sixteen times the allowable yield strength in bending and nineteen times the allowable shear stress at an applied belt tension of 50 pounds per linear inch. Frame deflection shall not exceed 0.002 inch under the same belt tension load. Design calculations shall be submitted to substantiate the required frame safety factors and deflection limit.

C. After fabrication all frame members shall be hot dipped galvanized per ASTM A123 to a thickness of 5 to 7 mils to assure complete and thorough corrosion protection. Painted or flame sprayed coatings are not acceptable since adequate surface protection at boltholes, slots and inaccessible areas is not assured. Stainless steel local side panels shall be provided where necessary to contain spray mist and provide operator protection from moving parts.

2.7 GRAVITY DRAINAGE SECTION

A. Each belt filter press shall contain an extended length gravity drainage section consisting of an inlet distributor, a filter belt, belt supports, sludge containment seals, drainage elements, a discharge chute and a filtrate collection pan.

B. Conditioned sludge shall be fed to the press by gravity overflow from the feed hopper onto a sludge distributor constructed of type 316 stainless steel. Even distribution of the sludge across the entire belt width shall be achieved by the use of the flooded bottom distribution system without the use of a driven spreader mechanism.

C. Gravity dewatering shall occur on a horizontal traveling belt section with a minimum active dewatering length of 10 feet and a minimum active dewatering area of 70 square feet through which free water drainage shall occur. Inclined gravity drainage areas shall not be allowed due to the cloth blinding effect caused by pooling of fragile sludges. The belt shall be supported in this section by full width ultra high density molecular weight polyethylene support/ wiper bars 1 3/4 inches in diameter with minimum 3-1/2 inch spacing. The bars shall assure maximum free water drainage by repeatedly breaking the surface tension of the water on the underside of the belt. The bars shall be mounted in type 316 stainless steel support brackets. The bars shall be fabricated with square type 316 stainless steel plugs on each end which shall allow each bar to be rotated in 90 degree increments for extended life and reduced maintenance cost. The gravity drainage zone shall be so designed that the filter belt does not have to be removed to rotate or replace support bars. Replaceable rubber side seals with type 316 stainless steel holders shall be provided to contain the sludge on the belt. These seals shall not require bolted connections so that they may be easily and quickly replaced. A type 316 stainless steel discharge chute

shall be provided at the discharge end of the gravity section to provide a gentle transition to the wedge zone to prevent floc shear of the thickened sludge at this point.

D. In order to minimize polymer use, maximize hydraulic and solids loading rates and promote more rapid drainage of free water from the sludge, a combination of plows shall be located in the gravity drainage zone. A minimum of eight rows of plows shall be furnished for thorough sludge dispersion along the entire length of the gravity zone. To facilitate convenient operator cleaning and to provide flexibility of operation, the plows shall be mounted on crossbars with lifting handles to raise and lock each row in an upright, out of service position. The crossbars shall be type 304 stainless steel; associated mounting and lifting hardware shall be hot dipped galvanized malleable iron. Each plow shall be of ultra high density molecular weight polyethylene and shall be mounted on a type 316 stainless steel holder which in turn shall be mounted on the crossbar and spaced on 6 inch centers. The plows shall be individually adjustable on the crossbars to allow for more flexibility. A total of 68 plows shall be provided in the gravity drainage zone. They shall also be designed to be self cleaning by being mounted to allow them to freely and independently rotate and/or raise to prevent solids build up.

E. A 14 gauge type 316 stainless steel drain pan shall be provided beneath the gravity drainage section to collect the filtrate and to direct it to the collection sump beneath the press through rigid PVC pipes of sufficient size to handle the drainage from the combined sludge and polymer feed streams. Other drain pan materials of construction are not acceptable due to possible cracking or breaking or failure of any applied corrosion resistant coating.

2.8 WEDGE SECTION

A. Each press shall contain a wedge or low pressure section consisting of a pair of converging pressure belts, belt supports, troughing seals, a filtrate collection pan and provisions to adjust the angle of convergence of the belts.

B. The wedge section shall receive thickened sludge discharged from the gravity zone, shall be horizontal and shall provide a zone wherein the two pressure belts gradually converge and begin to apply pressure to the sludge contained between the two tensioned belts. The wedge section shall have a minimum dewatering length of 6 feet and a minimum dewatering area of 40 square feet figured on the basis of one belt. The carrying belt shall be supported in this section by full width ultra high density molecular weight polyethylene support/wiper bars 1-3/4 inches in diameter spaced on 3-1/2 inch centers. The bars shall be mounted in type 316 stainless steel support brackets, shall have square type 316 stainless steel end plugs, shall be rotatable in 90° increments for extended life and shall be rotated or replaced without removing the belts.

C. For process flexibility a manually adjustable roller shall be provided above the upper belt at the entrance to the wedge section to adjust the angle of convergence of the two belts to provide a means for adjusting the amount of pressure exerted on the sludge before entering the shear/pressure section of the press. Adjustable troughing seals shall be provided under both sides of the lower belt to prevent sludge migration beyond the belt edges and allow the application of mild pressure without process upset.

D. A 14 gauge type 316 stainless steel drain pan shall be provided beneath the wedge section to collect the filtrate and to direct it to the collection sump beneath the press through rigid PVC pipes. Other drain pan materials of construction are not acceptable.

2.9 SHEAR/PRESSURE SECTION

A. Each press shall include a shear/pressure section containing a minimum of eight dewatering drums in a horizontal plane which shall apply compression and shear reversals to the sludge by passing the sludge cake sandwiched between the two tensioned belts alternately over one drum and under the next. Designs that include the pressure roll profile in a vertical plane are not acceptable. The shear/pressure section shall begin with a 30 inch diameter perforated drum which shall be self bailing to provide unimpeded filtrate drainage without rewetting of downstream cake and provide a gradual transition into the shear/pressure section. The remainder of the dewatering drums shall be solid surface drums and shall vary from 20 to 10 inches in diameter to provide the proper combination of dewatering area, applied pressure profile and time under pressure. The shear/pressure section configuration shall provide a minimum belt length in actual contact with the drums of 17 feet and a minimum dewatering area in actual contact with the drums of 129 square feet figured on the basis of one belt. Inactive belt runs between dewatering drums shall be kept to a minimum.

2.10 BELTS

A. Each press shall be provided with two dewatering belts which shall be seamed and shall be fabricated of wear resistant monofilament polyester. The mesh design, porosity and tensile properties shall be selected for optimum dewatering of the specific sludge to be processed and for a minimum life of 2000 hours of continuous failure free operation. Each belt shall be a minimum of 87 inches wide, providing an effective 2.0 meter operating belt width in contact with the sludge.

B. Belt edges shall be heat sealed and bonded for stability. A low profile type 316L stainless steel clipper seam shall be used to join the belt ends. Multiple coats of polyurethane adhesive shall be applied to the belt/clipper seam joint to provide a full and uniform bond at the joint, to reinforce the joint and to provide a smooth transition from belt to seam for proper doctor blade and drainage system element interface.

C. Belts shall be designed for ease of replacement with a minimum of press downtime. Belt replacement shall be such that disassembly of the equipment is not required.

2.11 BELT WASH SYSTEM

A. Each press shall be furnished with a belt wash system consisting of a spray header, a spray containment housing and a washwater collection box for each belt to thoroughly clean both belts after cake discharge. ~~The belt wash system shall be suitable for use with plant effluent water furnished at a line pressure of 60 psig at the belt press locale. A washwater booster pump shall be furnished with each press to provide the required operating pressure to the belt wash system when adequate line pressure is not available.~~ The system demand for each press shall be 80 GPM at 85 psig furnished direct from nonpotable water pumps.

B. Self cleaning spray headers shall be furnished for each belt consisting of a schedule 10 type 316 stainless steel header, a series of replaceable type 317LM stainless steel spray

nozzles providing an overlapping spray pattern on each belt, a replaceable stainless steel nozzle cleaning brush inside the header and an external handwheel operator which shall make the header self cleaning. A full turn of the handwheel shall cause the brush to clean the nozzle orifices and shall allow the flushing water to pass through the header for discharge directly to the collection basin beneath the press through a rigid PVC pipe. Presses without this or similar direct individual nozzle cleaning provisions shall not be acceptable.

C. A 14 gauge type 316 stainless steel enclosure shall surround each wash header both to contain spray mist and to collect and discharge the spent washwater. The wash header enclosures shall include a housing above and below the filter belt to contain all mist and spray water and shall include easily replaceable brush type seals above and below the belt at both the entry and exit of the enclosures to prevent the escape of spray mist. Seal replacement shall be convenient and quick and shall not involve the use of bolted connections. Spent washwater shall be directed to the collection sump under the press through rigid PVC piping. Other enclosure materials of construction shall not be acceptable due to possible cracking or breaking or failure of any applied corrosion resistant coating.

D. The spray headers shall be piped to a common washwater inlet connection on the press. A NEMA 4X solenoid valve and NEMA 4X pressure switch shall be provided in the water inlet manifold both for on off control and to provide an alarm signal in the event of low washwater pressure. Each spray header shall have a 150 psi Victaulic clamp connection to the water inlet manifold to allow for belt spray direction adjustment.

E. A washwater booster pump shall be furnished for each press to raise the system water pressure to the required operating level. The pump shall be a horizontal end suction centrifugal pump in type 316L stainless steel construction with mechanical shaft sealing. The pump shall be driven by a direct coupled 5 HP, 3600 RPM, TEFC motor and shall be furnished with a common steel channel base for the motor and pump and a coupling guard.

2.12 BELT TRACKING SYSTEM

A. Each press shall be furnished with a continuous automatic belt tracking system consisting of a belt edge location sensor, a proportional tracking valve, a steering roller and a hydraulic cylinder for steering roller control for each of the belts along with a common hydraulic control system. Electro-mechanical belt tracking systems and belt tracking systems that are non continuous shall not be permitted. The system shall constantly monitor belt location and through the proportional sensor continuously adjust each belt path as necessary to maintain a central location on the rollers thereby preventing over steering and belt wrinkling and providing longer belt life.

B. A stainless steel sensing arm shall be in continuous contact with each belt edge and its location shall govern the position of a proportional pilot valve which in turn shall affect the position of a hydraulic cylinder which shall be connected to a pivotable belt steering roller. The cylinder shall cause the roller to skew from its transverse position and cause the belt to track centrally on the press rollers. The alignment system shall operate with smooth and slow motions resulting in a minimum of belt travel from side to side. Limit switches in NEMA 4X enclosures shall be furnished on both sides of each belt to sense gross belt misalignment and provide a signal to immediately shut the entire system down and sound an alarm in the event of a tracking system failure of either of the belts.

C. A hydraulic control system shall be provided. For maximum corrosion resistance each hydraulic cylinder shall have Ryertex "G-10" heads, a fiberglass body, a chrome plated rod and stainless steel hardware. Belt tracking and tension controls shall be located on the hydraulic power unit. All hydraulic lines shall be stainless steel tubing, neatly arranged and run along and across the press framing.

D. A hydraulic power unit shall be furnished for each press consisting of a 2 HP, 1800 RPM, TEFC motor, a variable volume pressure compensated pump, a system pressure gauge, a tension control/relieving valve, a tension system pressure gauge, a breather type filler cap, a return filter with bypass, a level sight gauge and a thermometer all mounted on a 5 gallon type 316 stainless steel reservoir. The power unit shall be mounted on the press frame. All system hydraulic piping and tubing shall be factory furnished and installed. A NEMA 4X pressure switch shall be included to sense low system pressure and provide a signal to shut the entire system down and sound an alarm in the event of the loss of system pressure.

2.13 BELT TENSIONING SYSTEM

A. Each press shall be furnished with a belt tensioning system for each of its belts consisting of a tension roller, hydraulic cylinders to apply tension to the belt, a rack and pinion mechanism to synchronize the hydraulic cylinder motions and a hydraulic control system. The tensioning system shall be such that dewatering pressure is directly proportional to belt tension and that adjustments in belt tension shall result in immediate changes in dewatering pressure.

B. A tension roller shall be provided for each belt and it shall be powered by a hydraulic cylinder on each end of the roller. The motion of each cylinder shall be synchronized with its opposite side cylinder. This cylinder synchronization arrangement shall consist of a frame mounted rack and a tension assembly mounted pinion on each side of the press. The pinions, rigidly connected to a cross shaft, shall provide parallel movement of the tension roll ends thereby preventing belt tracking and alignment problems. For maximum corrosion resistance the pinions and racks shall be nylon; the hydraulic cylinders shall be furnished with Ryertex "G-10" heads and fiberglass bodies, chrome plated rods and stainless steel hardware.

C. Belt tension shall be controlled at the hydraulic power unit by means of a tension control valve as previously described. A common control shall be furnished such that both belts are tensioned equally preventing operational difficulties due to unequal belt tensions. Once set, the dewatering pressure shall be maintained automatically regardless of process changes. The belt tension system shall be designed to provide belt tensions varying from 0 to 50 pounds per linear inch throughout the shear/pressure section of the press. A directional control valve shall also be provided on the press for retraction of the tension cylinders when required.

2.14 BELT DRIVE SYSTEM

A. Each press shall be provided with a belt drive system consisting of a rubber covered belt drive roll for each belt, a common AC drive motor for variable frequency control for the two belts and reduction gearing. Hydraulic belt drive motors shall not be permitted.

B. The belt drive motor shall be a 3 horsepower, 1800 RPM, TEFC, severe duty AC motor. The motor shall be C face mounted to a hollow shaft, torque arm helical bevel reducer, AGMA Class II rated, which shall be shaft mounted on the drive roll. The belt speed range shall be adjustable over a range of 2 to 20 feet per minute. For positive belt traction the belt drive roll shall be rubber covered. The drive roll body shall be a minimum of 9-1/2 inches in diameter with a 1/4 inch thick minimum rubber covering on top of that.

C. Each drive motor shall contain a thermal sensor imbedded in the windings which shall provide a signal for alarm and system shutdown if excessive motor temperature develops. Loss of motion detectors shall be provided on the press to sense belt drive failure or a broken belt condition and provide signals for system shutdown and sound an alarm in the event that either of these conditions occur. The drive motor shall be located above the discharge rolls and away from high moisture areas. A variable frequency controller shall be furnished in the belt press electrical control panel to provide power and speed control for the belt drive motor.

2.15 DISCHARGE BLADES

A. Each press shall contain two discharge blades to assist in removing dewatered sludge cake from the belts at the discharge end of the press. The lower blade shall also direct the sludge cake to the receiving device (conveyor, container, chute, etc.). The discharge blades shall be replaceable and shall be made from high density polyethylene and each shall have two beveled edges for doubling the life of the blade. The blades shall be mounted on hot dipped galvanized, stiffened, pivotable support members with arms at each end for mounting adjustable counterweights for maintaining the proper pressure between the blades and the discharge rolls thereby reducing belt and closure wear. Lockable handles shall be provided so that the blades can be easily positioned away from the belts for cleaning.

2.16 DRUMS AND ROLLERS

A. Each press shall be furnished with the necessary drums and rollers to provide gravity dewatering, shear/pressure dewatering, belt drive, belt tension, belt tracking and general belt support. A minimum of one perforated drum shall be furnished, all others shall be solid surface drums and rollers.

B. Type 316 stainless steel shall be used for the perforated drum body and its end plates. The body shall be 3/16 inch thick and end plates 1/2 inch thick. Perforated drum shafts shall be type 17-4 PH stainless steel. All other drums and rollers shall be constructed of ASTM A 53 Grade B or ASTM A 106 Grade B carbon steel with wall thicknesses of 1/2 inch minimum. Larger diameter major load carrying drums shall have welded double end plate supported stub shaft construction on each end with 5 inch diameter minimum type 17-4 PH stainless steel shaft stock for the drive rolls and 5 inch diameter minimum AISI 4140 heat treated steel shaft stock for the dewatering drums. Smaller diameter nominal load carrying rollers shall have either welded double end plate supported stub shaft construction with AISI 1045 steel shafts or deep bored shrink fit and welded solid journal AISI 1045 steel stub shaft construction on each end. Shaft diameters through the support bearings shall be 2-13/16 inches diameter minimum for pressure drums and 2-11/16 inches diameter minimum for rollers.

C. Belt drive rollers shall have a 1/4 inch thick 80 durometer vulcanized rubber covering for gripping the belts and for corrosion protection and shall have type 316 stainless steel end plates. All other solid surface drums and rollers shall have a 30 mil thick black fusion bonded applied nylon coating for corrosion protection which shall cover the roll body, ends and shafts up to the point of insertion into the bearings.

D. All drums and rollers shall be designed to withstand the stress reversals inherent in rotating elements and shall be designed with a minimum factor of safety of 2 over fatigue failure of the material for shafts and 5 over fatigue failure for drum and roller bodies. Drum and roller design shall be based on operating at rated belt speed, a belt tension of 50 pounds per linear inch on each belt and rated drive horsepower. Shaft stress concentration shall be minimized by the use of generous, well polished radii. Deflection of all drums and rollers whether major load carrying or not, shall be limited to 0.040 inch over the full width of the drum or roll body when operating at a belt tension of 50 pounds per linear inch per belt at rated drive horsepower. Calculations shall be furnished substantiating shaft sizing, drum and roll construction design, fatigue failure safety factors and drum and roller deflection.

2.17 BEARINGS

A. The shafts of all drums and rollers on each press shall contain heavy duty self aligning double row spherical roller bearings in split case four bolt base cast iron pillow block housings. Self alignment shall occur within the housing. The housings shall permit the changing of bearings without disturbing the factory set alignment of the rollers.

B. Bearings shall be arranged for tapered adapter mounting to the drum and roller shafts. Bearings shall contain Triple Chek contact seals and shaft mounted splashguards on the shaft side to provide adequate sealing from moisture and grime. Non-shaft sides of bearing housings shall be solid. Bearing housings shall have a factory applied 12 mil thick black fusion bonded applied nylon coating for added corrosion resistance. All bearing hardware shall be stainless steel. All roller bearings shall be main frame mounted and shall be greaseable while the press is in operation.

C. All roller bearings shall have an L-10 bearing life in excess of 800,000 hours with belts tensioned at 50 pounds per linear inch and with belts traveling at rated speed. Calculations shall be furnished demonstrating compliance with these provisions.

2.18 MISCELLANEOUS

A. Each press shall be provided with two yellow safety trip cords at each side of the press, one at a lower elevation and one at a higher elevation. Each cord shall be connected to a NEMA 4X lever operated emergency stop switch which shall immediately stop the belt drive and shut down the entire system upon actuation of the switch. These switches shall be independent of the gross belt misalignment switches and shall require resetting at the press before the equipment can be restarted.

B. Each press shall be complete with all intra unit power and control wiring terminating in a single press mounted NEMA 4X stainless steel junction box. All wiring shall be run in PVC coated rigid conduit for added corrosion resistance.

C. Each press shall be complete with all intra unit piping including all filtrate and washwater drain lines directed to the collection basin beneath the press, all washwater supply piping terminating at a single washwater inlet connection and all hydraulic piping and tubing.

D. For maximum corrosion resistance all miscellaneous parts such as brackets, spacers, etc. shall be fabricated from type 304 stainless steel, hot dipped galvanized steel or plastic and all guards shall be fabricated from type 304 stainless steel.

2.19 ELECTRICAL CONTROL PANEL

A. An electrical control panel shall be furnished with each belt filter press to control the belt press functions and those of the related auxiliary equipment specified herein. The panel shall be preassembled and prewired and shall include all controls necessary for semi automatic system operation with provisions also for manual control of individual items when desired. The panel shall be suitably wired for connection to a 480 volt, 3 phase, 60 Hertz power source.

B. The enclosure shall be fabricated from 14 gauge type 304 stainless steel, shall be floorstand mounted and constructed to NEMA 4X standards. Instruments and control devices mounted on the enclosure door shall be rated for or installed in such a manner as to maintain the NEMA 4X integrity. Nameplates shall be engraved laminated phenolic with black background and white letters to identify each component mounted on the panel face. Letter height shall not be less than 3/16 inch. Additionally, the complete panel, as an assembly, shall be built in accordance with UL 508A and shall have a UL serialized label.

C. Wiring shall be accomplished in a neat workmanlike manner and run in PVC wiring duct where practical. Where not practical it shall be supported and tied in position with nylon cable ties. All wiring shall be identified with a number code and all wiring for external connection shall be brought to a numbered terminal strip. Wiring shall comply with the applicable requirements of the latest edition of the National Electrical Code. Interconnecting wiring between this panel and the press and other related equipment shall be the responsibility of the contractor.

D. The enclosure shall house a flange mounted dead front main disconnect, all motor starters, variable frequency controls, a programmable logic controller, interlocks, alarms, indicating lights and operator controls required for the operation of the belt filter press and auxiliary equipment described in this specification section. Each AC motor, contactor and wiring shall be protected by a properly sized motor starter protector and overload relays. Variable frequency drives shall be protected by properly sized fuses. Indicating lights and operator controls only as required shall be included in this panel for other system auxiliary equipment items described in other sections of the specifications. Starters, variable speed drives, controllers, etc. for such other items shall be furnished by others and shall be located elsewhere. The following control interfaces shall be provided for this auxiliary equipment: dry contacts rated at 10A 125V for start/stop control, PLC inputs to accept dry contact 'on' status and motor overload/fail signals, 4 20 madc signals or high/low speed switch contact closures as required for speed command signals. System interlocking and logic shall be provided by an industrial grade programmable logic controller meeting the following minimum requirements:
   1. Total input/output: As required, expandable I/O.
   2. Memory: EEPROM or FLASH.
   3. Acceptable Allen Bradley Micrologix Series.

E. Components shall be selected and the enclosure sized to limit the enclosure internal heat rise to 10°C while operating in a 40°C ambient. Calculations or method of determining compliance shall be submitted to the Engineer with the initial drawing submittal. A minimum of 20% spare terminal blocks shall be provided. The control panel shall be completely tested under simulated field conditions by the press manufacturer prior to shipment. The Operation and Maintenance Manual shall contain complete as built drawings including schematics, physical layout and terminal connections. It shall also contain tabulated maintenance procedures.

F. The control panel face shall include the following controls and indicators. All start/stop controls shall be of the illuminated pull to start push to stop type with status lights indicating steady on for run and flashing for fail or overtemperature.
1. Main disconnect switch.
2. System automatic cycle start/stop control with on status light.
3. Hydraulic power unit start/stop control with on status/motor fail light.
4. Belt washwater booster pump start/stop control with on status/motor fail light and/or washwater solenoid valve to open/close appropriately.
5. Belt drive start/stop control with on status/motor overtemperature light, speed control potentiometer and speed indicator.
6. Sludge feed pump start/stop control with on status/motor fail light, speed control and speed indicator as required.
7. Polymer feed pump start/stop control with on status/motor fail light, speed control and speed indicator as required.
8. Sludge cake conveyor start/stop control with on status/motor fail light if required.
9. Start/stop controls with on status/motor fail lights for any other auxiliary equipment items if required.
10. Belt prewet and post wash cycle indicator lights.
11. Motor run/jog selector switch.
12. Emergency stop pushbutton with alarm/emergency trip light.
13. Gross belt misalignment alarm light.
14. Low system hydraulic pressure alarm light.
15. Low system washwater pressure alarm light.
16. Belt drive fail/broken belt alarm light.
17. Alarm lights as required for other specified alarm conditions.
18. Audible alarm horn.
19. Alarm acknowledge pushbutton.
20. Alarm reset/lamp test pushbutton.

G. Semi automatic operation of the entire system shall be controlled by a single start/stop cycle control. This control along with status and alarm contacts shall provide inputs to the programmable controller (PLC). The controller shall continuously scan the inputs and according to a logic program stored in its memory shall develop the appropriate run, stop, status or alarm signals for devices connected to its output. The PLC shall cause specific functions to be interlocked, timed, started or stopped as required during the start up, run and shutdown modes of operation. These modes of operation may be operator initiated or caused by one of the inputs. Essentially, the PLC shall initiate and monitor each step of the cycle, check that all interlocks are satisfied and drive start ups are confirmed before proceeding to the next step, provide for prewetting the belts before sludge is introduced to the press on start up and provide for the proper timed intervals for complete discharge of sludge cake and thorough belt washdown during the shutdown cycle. The control system shall allow unattended operation in the semi automatic mode. In the manual mode of

operation, the system shall be started and stopped by the actuation of each individual component control.

H. During operation in either mode, any of the following alarm conditions shall activate the alarm horn and respective alarm light or motor status indicator light causing the entire system to shut down either instantaneously or in the normal programmed sequence as appropriate: gross belt misalignment, low system hydraulic pressure, low washwater pressure, emergency stop at the press, belt drive fail, broken belt, belt drive motor overheated, auxiliary DC motors overheated, auxiliary AC motors overloaded or emergency stop at the control panel. Alarm annunciation shall follow ISA sequence AM. The motor status light shall serve as the alarm light, flashing for motor fault conditions or, in the case of remotely located starters, for overload trip or power off. If the operator can correct an alarm condition during programmed shutdown, the PLC shall allow continuation of full operation by reactivation of the cycle control.

I. For either semi automatic system operation where the programmable logic controller assumes control or manual control where an operator assumes control, the sequence of operation shall be as follows:
   1. Start up Sequence:
      a. Start the hydraulic power unit.
      b. Start the belt washwater booster pump and/or open the washwater solenoid valve.
      c. Start the belt drive.
      d. Start the conveyor.
      e. After allowing the belts to become wet, start the sludge feed pump and the polymer feed pump.
      f. Start any other auxiliary equipment item at the appropriate time during the sequence.
      g. Adjust belt speed and/or sludge and polymer feed rates if appropriate.
   2. Shutdown Sequence:
      a. Stop the sludge and polymer pumps.
      b. After allowing sludge to discharge completely from the belts and allowing for complete belt washdown, stop the washwater booster pump and/or close the solenoid valve.
      c. Stop the belt drive.
      d. Stop the hydraulic power unit.
      e. Stop the conveyor.
      f. Stop any other auxiliary equipment at the appropriate time during the sequence.

2.20 SPARE PARTS

A. The following spare parts shall be furnished for each belt filter press:
   1. Four complete set of dewatering belts (8 total)
   2. Four complete set of dewatering blades (8 total)
   3. Two complete set of containment seals (4 total)
   4. Two complete set of washwater box seals (4 total)
   5. Four press roller bearing of each different size used (8 total)
   6. Three fuses of each size used (6 total)
   7. One oil filter for the hydraulic power unit (2 total)

2.21 SURFACE PROTECTION

A. Belt filter press materials of construction (stainless steel, fiberglass, plastic, etc.) and protective coatings and coverings (hot dipped galvanizing, fusion bonded nylon, rubber, etc.) shall be completely corrosion resistant such that shop or field applied paint coating is not required.

B. Miscellaneous parts such as brackets, spacers, guards, etc. shall be fabricated from type 304 stainless steel, galvanized steel or plastic and shall not require shop or field applied paint coating.

C. Items such as motors, gear reducers, pumps, hydraulic power units and the like shall receive standard manufacturer's finish coatings.

2.22 WARRANTY

A. The equipment shall be guaranteed against defects in material and workmanship under normal use and service for a period of one year after start up not to exceed eighteen months after shipment during which time repairs or replacements shall be made without charge. Further, an additional four year warranty (total of five years) shall be provided for the belt press frame and its coating, the belt press rollers and their coatings and the belt press roll bearings.

2.23 MANUFACTURER'S SUPERVISORY SERVICES

A. The belt press manufacturer shall furnish the services of a competent and experienced person for a period of ten days to be covered in two trips to job site to check the installation, supervise the start up, supervise the performance testing and provide operator instruction for the equipment furnished. Additional service, if requested, shall be available at the manufacturer's portal to portal per diem rate in effect at the time of service delivery, plus all travel and living expenses.

2.24 PERFORMANCE TESTING

A. The equipment manufacturer shall conduct a performance test to demonstrate that the installed equipment can meet the specified performance requirements. One press shall be selected for testing. The test shall occur as soon as possible after successful equipment start up and process and system stabilization has been accomplished.

B. The test period shall consist of two five hour steady state test runs on two consecutive days with sludge feed, sludge cake and effluent (combined filtrate and washwater) samples taken at the start of each run and every hour thereafter resulting in a total of twelve samples of each type. The sludge feed and effluent samples shall be analyzed for total suspended solids content; the cake samples shall be analyzed for total solids content. The resulting solids contents shall be averaged and the average value of each type shall be used to judge satisfactory performance. Polymer solution strength and flow rate shall be recorded. Sludge feed rate shall be recorded.

C. The press manufacturer's representative shall operate the equipment during the test. The owner shall furnish personnel to assist in the operation and to take samples. The owner shall also furnish sludge, water, polymer, utilities, sludge cake disposal, routine test

equipment and laboratory services for analyzing the samples. The belt press manufacturer shall recommend the most suitable polymer which shall be furnished by the owner. The contractor shall provide any special instrumentation for measuring sludge feed or polymer feed rates.

D. The equipment shall have passed the performance test if the specified cake solids, solids capture and polymer use requirements are met with the press operating at the specified hydraulic and solids loading rates.

E. Should the installed equipment fail to meet the specified performance requirements, the manufacturer shall within 30 days make changes in the equipment or method of operation as necessary and the equipment shall be retested. If after a second 30 day period, the equipment still does not meet the performance criteria, the equipment shall have failed the performance test and the owner shall require its removal and replacement with the specified equipment at no additional cost to the owner.

PART 3 EXECUTION

3.1 GENERAL

A. The General Contractor shall assume full responsibility for coordination of the entire project, including verification of all structures, piping, coating systems and equipment components are compatible. The general contractor shall initially operate each equipment system, and shall make all necessary adjustments so that each system is placed in proper operating condition.

B. Equipment and materials utilized for this project must be approved by the Engineer prior to installation. Approval for installation or incorporation in this project will be made only after submittal or manufacturer's shop and installation drawings, test results or other data as specified herein. Installation of equipment shall be in full conformance with the manufacturer shop drawings and requirements as approved by the Engineer. Wherever a conflict arises between manufacturer's instructions and the contract documents, the contractor shall follow the Engineer's decision at no additional cost to the Owner.

C. Installation of equipment shall be in full conformance with the manufacturer's shop drawings and requirements.

3.2 WORKMANSHIP

A. Handle carefully and protect the equipment and appurtenances to avoid damage.

B. The equipment shall be safely secured to the wall and floor in accordance with the Engineer's design drawings. All plumbing and electrical shall be in accordance with state and federal codes. All piping and tubing shall be sealed for leaks.

C. Any evidence of improper installation shall be corrected by the Contractor. Care during storage, installation and startup shall be in strict accordance with manufacturer's recommendations.

D. MANUFACTURER'S SERVICES

E. The Contractor shall require the manufacturer to furnish the services of a qualified field Engineer to perform the following functions in the designed periods of time. These services are to be performed at the jobsite. A minimum of two (2) visits to the job site shall be required.

1. Check-out of installation, start-up of equipment and initial operator instruction. This service shall take place after all mechanical equipment associated with the control system is installed and mechanically operable. One (1) 8-hour man day, minimum.
2. After equipment is fully operational, and before Owner will assume responsibility for the operation of the equipment, the equipment manufacturer's operation specialists shall instruct the Owner's operating personnel in the care, maintenance and proper operation of the equipment.
3. All costs for the above manufacturer functions including travel, lodging, meals, and incidentals shall be considered to have been included in the contractor's lump sum bid price.
4. Prior to plant startup, all equipment described herein shall be inspected for proper alignment, quiet operation, proper connections, and satisfactory performance by means of a functional test.
5. During plant start-up all equipment described herein shall be inspected for proper connections and satisfactory performance by means of a function test.
6. The equipment system and associated accessories shall be field tested to verify adequate performance.
7. Units apparently failing to meet the Specifications must be corrected to provide proper service. Should the problem persist due to a flaw in material and/or in the design of the equipment, new equipment must be provided by the Contractor to meet the specifications.

F. Operation and Maintenance

1. The equipment manufacturer shall be responsible for supplying written instruction, which shall be sufficiently comprehensive to enable the operator to operate and maintain and all equipment supplied by the manufacturer. Instructions shall assume that the operator is familiar with related equipment and controls, but that he has not previously operated and/or maintained the exact equipment supplied.
2. The instruction shall be prepared as a system manual applicable solely to the equipment supplied by the manufacturer to these specifications, and shall include those devices and equipment supplied by him.
3. Operation and maintenance instruction shall be specific to the equipment supplied in accordance with these specifications.
4. Manufacturer’s Costs:
   a. All costs for the above manufacturer functions including travel, lodging, meals, and incidental shall be considered to have been included in the Contractor's lump sum bid price.

END OF SECTION

SHAWNEE MUNICIPAL AUTHORITY
WASTEWATER SYSTEM IMPROVEMENTS
CONTRACT DOCUMENTS VOLUME 6 OF 8 – NORTHSIDE WWTP
JUNE 2022

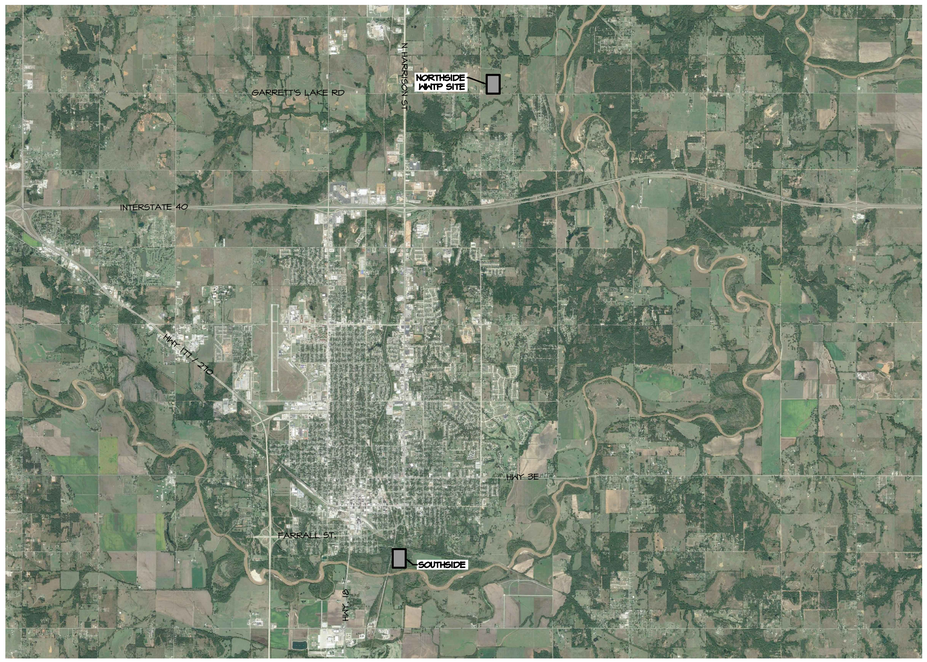

IN COOPORATION WITH OKLAHOMA WATER RESOURCE BOARD
OWRB PROJECT #ORF-20-0018-CWA

BEFORE YOU DIG 1-800-522-6543 CALL OKIE

WALL ENGINEERING

City of Shawnee OKLAHOMA

REGISTERED PROFESSIONAL ENGINEER BRANDON WALL 21108 OKLAHOMA

WALL ENGINEERING PROJECT #: SHN-20-01
223 N. WASHINGTON, DURANT, OK 74701
(580) 924-1800
OKLAHOMA CERTIFICATE OF AUTHORIZATION #5413
EXPIRATION DATE: JUNE 30, 2023

INDEX OF SHEETS

	TITLE SHEET
S1	SHEET INDEX

SITE CIVIL

C-1	PLAT OF SURVEY
C-2	GENERAL CONSTRUCTION NOTES
C-3A	SURVEY DATA/CONTROL SUMMARY
C-3B	SURVEY DATA SHEET
C-4	EXISTING SITE PLAN
C-5A	DEMOLITION PLAN - INITIAL
C-5B	DEMOLITION PLAN - FINAL
C-6A	HYDRAULIC PROFILE
C-6B	HYDRAULIC PROFILE
C-7A-7D	LIQUID FLOW SCHEMATIC
C-8	SITE PLAN
C-9	PAVING PLAN
C-10	JOINTING PLAN
C-11	COORDINATE PLAN
C-12	GRADING PLAN
C-13	PRIMARY PIPING PLAN
C-14A	SECONDARY PIPING PLAN
C-14B	SECONDARY PIPING PROFILES
C-15	FENCING PLAN

HEADWORKS

HW-1	INFLUENT BAR SCREEN, GRIT REMOVAL AND INFLUENT LIFT STATION OVERALL MECHANICAL PLAN
HW-2	INFLUENT BAR SCREEN, GRIT REMOVAL AND INFLUENT LIFT STATION HEADWORKS PLAN VIEW
HW-3	INFLUENT BAR SCREEN, GRIT REMOVAL AND INFLUENT LIFT STATION MECHANICAL SECTION VIEW
HW-4	INFLUENT BAR SCREEN, GRIT REMOVAL AND INFLUENT LIFT STATION MECHANICAL SECTION VIEW
HW-5	INFLUENT BAR SCREEN, GRIT REMOVAL AND INFLUENT LIFT STATION MECHANICAL SECTIONS VIEWS AND DETAILS
HW-6	INFLUENT BAR SCREEN, GRIT REMOVAL AND INFLUENT LIFT STATION MECHANICAL SECTIONS VIEWS AND DETAILS
HW-7	INFLUENT BAR SCREEN, GRIT REMOVAL AND INFLUENT LIFT STATION LIFT STATION PLAN AND SECTION
HW-8	INFLUENT BAR SCREEN, GRIT REMOVAL AND INFLUENT LIFT STATION MECHANICAL SECTION VIEWS AND DETAILS

PRE-EQUALIZATION BASIN

PEQ-1	PRE-EQUALIZATION BASIN PLAN, SECTION AND SCHEDULES
PEQ-2	PLAN, SECTION AND SCHEDULES SECTION, DETAILS AND SCHEDULES

SEQUENCING BATCH REACTOR

SBR-1	SEQUENCING BATCH REACTOR PLAN VIEW AND SCHEDULES
SBR-2	SEQUENCING BATCH REACTOR SECTION VIEWS AND DETAILS
SBR-3	SEQUENCING BATCH REACTOR ELEVATION VIEWS AND SCHEDULES
SBR-4	MISCELLANEOUS DETAILS
SBR-5	MISCELLANEOUS DETAILS

AEROBIC DIGESTER

AD-1	AEROBIC DIGESTER PLAN VIEW AND SCHEDULES
AD-2	AEROBIC DIGESTER SECTION VIEWS AND SCHEDULES
AD-3	AEROBIC DIGESTER ELEVATION VIEWS AND SCHEDULES

ULTRAVIOLET DISINFECTION SYSTEM

UV-1	ULTRAVIOLET DISINFECTION SYSTEM PLAN VIEW AND SCHEDULES
UV-2	ULTRAVIOLET DISINFECTION SYSTEM SECTION VIEWS
UV-3	ULTRAVIOLET DISINFECTION SYSTEM ELECTRICAL ROUTING PLAN
UV-4	ULTRAVIOLET DISINFECTION SYSTEM MISCELLANEOUS DETAILS

EFFLUENT PARSHALL FLUME

PF-1	EFFLUENT PARSHALL FLUME MECHANICAL PLAN AND SECTION

LIFT STATIONS

LS-1	EFFLUENT LIFT STATION MECHANICAL PLAN AND SCHEDULES
LS-2	EFFLUENT LIFT STATION MECHANICAL SECTION AND SCHEDULES
LS-3	FEB RETURN LIFT STATION MECHANICAL PLAN, SECTION AND SCHEDULES

WET FLOW EQUALIZATION BASIN

FEB-1	WET WEATHER FLOW EQUALIZATION BASIN PLAN VIEW
FEB-2	WET WEATHER FLOW EQUALIZATION BASIN SECTION VIEW AND DETAILS

BLOWER BUILDING

BL-1	BLOWER BUILDING PLAN, SECTION AND SCHEDULES
BL-2	CHLORINE BUILDING MISCELLANEOUS DETAILS
BL-3	BLOWER BUILDING MISCELLANEOUS DETAILS
BL-4	BLOWER BUILDING BLOWER PAD DETAILS

WAS PUMP STATION

WAS-1	WASTE SLUDGE PUMP STATION PLAN, SECTION AND SCHEDULES

SLUDGE HANDLING FACILITY

SHF-1	SLUDGE HANDLING FACILITY PLAN VIEW AND APPURTENANCE SCHEDULE
SHF-2	SLUDGE HANDLING FACILITY PIPING PLAN AND SCHEDULE
SHF-3	SLUDGE HANDLING FACILITY SECTION VIEWS AND SCHEDULES
SHF-4	SLUDGE HANDLING FACILITY BELT FILTER PRESS PLAN VIEW
SHF-5	SLUDGE HANDLING FACILITY BELT FILTER PRESS ELEVATION VIEW
SHF-6	SLUDGE HANDLING FACILITY WALKWAY PLAN AND DETAILS
SHF-7	SLUDGE HANDLING FACILITY POLYMER FEED SYSTEM DETAIL

OFFICE, LAB BUILDING & ELECTRICAL

A101	GENERAL NOTES & INDEX
A102	SPECIFICATIONS
A103	SPECIFICATIONS
A104	SPECIFICATIONS
A105	LIFE SAFETY INFORMATION
A106	LIFE SAFETY PLAN
A201	REFERENCE FLOOR PLAN
A202	DIMENSION FLOOR PLAN
A301	REFLECTED CEILING PLAN
A302	ROOF PLAN
A401	BUILDING ELEVATION
A402	DOOR ELEVATION
A501	BUILDING SECTION
A502	WALL SECTION
A503	WALL SECTION
A504	WALL SECTION
A601	INTERIOR ELEVATION
A602	MILLWORK ELEVATION
A603	MILLWORK SECTION
A701	ROOM FINISH
S101	GENERAL NOTES
S102	GENERAL NOTES
S201	GENERAL NOTES
S301	GENERAL NOTES
S302	GENERAL NOTES
S401	GENERAL NOTES

MISCELLANEOUS DETAILS

DT-1	STANDARD WATER DETAILS
DT-2	MISCELLANEOUS DETAILS
DT-3	MISCELLANEOUS DETAILS
DT-4	MISCELLANEOUS DETAILS
DT-5	MISCELLANEOUS DETAILS
DT-6	MISCELLANEOUS DETAILS
DT-7	MISCELLANEOUS DETAILS
DT-8	MISCELLANEOUS DETAILS
DT-9	MISCELLANEOUS DETAILS

ELECTRICAL

E-1	LEGEND
EA-1	SITE PLAN
EA-2	HAZARD CLASSIFICATION
EB-1	HEADWORKS I & C PLAN
EB-2	HEADWORKS CONDUIT ROUTING PLAN
EB-3	HEADWORKS CONDUIT ROUTING PLAN
EC-1	PRE-EQUALIZATION BASIN I & C PLAN
EC-2	PRE-EQUALIZATION BASIN CONDUIT ROUTING PLAN
EC-3	PRE-EQUALIZATION BASIN FACILITY PLAN
ED-1	SEQUENCING BATCH REACTOR I & C PLAN
ED-2	SEQUENCING BATCH REACTOR CONDUIT AND ROUTING PLAN
EE-1	BLOWER BUILDING I & C PLAN
EE-2	BLOWER BUILDING LIGHTING PLAN
EE-3	BLOWER BUILDING FACILITY PLAN
EF-1	ULTRAVIOLET DISINFECTION SYSTEM I & C PLAN
EF-2	ULTRAVIOLET DISINFECTION SYSTEM CONDUIT AND ROUTING PLAN
EF-3	ULTRAVIOLET DISINFECTION SYSTEM LIGHTING PLAN
EF-4	ULTRAVIOLET DISINFECTION SYSTEM FACILITY PLAN
EG-1	EFFLUENT LIFT STATION I & C PLAN
EG-2	EFFLUENT LIFT STATION CONDUIT ROUTING PLAN
EG-3	EFFLUENT LIFT STATION FACILITY PLAN
EH-1	AEROBIC DIGESTER I & C PLAN
EH-2	AEROBIC DIGESTER CONDUIT ROUTING PLAN
EJ-1	SLUDGE HANDLING FACILITY I & C PLAN
EJ-2	SLUDGE HANDLING FACILITY LIGHTING PLAN
EJ-3	SLUDGE HANDLING FACILITY FACILITY PLAN
EK-1	FEB RETURN LIFT STATION I & C PLAN
EL-1	LIGHTING PLAN - ADMIN
EL-2	POWER PLAN - ADMIN
EN-1	DETAILS
EN-2	DETAILS
EN-3	DETAILS
EN-4	DETAILS
EN-5	DETAILS
EN-6	DETAILS
EP-1	ONE-LINE
EP-2	SCHEDULES
EP-3	SCHEDULES
EP-4	SCHEDULES
EP-5	SCHEDULES
EP-6	SCHEDULES
EP-7	SCHEDULES
EQ-1	SCHEMATICS
EQ-2	SCHEMATICS
EQ-3	SCHEMATICS
ER-1	NETWORK RISER DIAGRAM
ES-1	CABLE SCHEDULE
ES-2	CABLE SCHEDULE
ES-3	CABLE SCHEDULE
ES-4	CABLE SCHEDULE
ES-5	CABLE SCHEDULE
ES-6	CABLE SCHEDULE
ES-7	CABLE SCHEDULE
ES-8	CABLE SCHEDULE
ES-9	CABLE SCHEDULE

MECHANICAL

M-1	HVAC LEGEND AND NOTES
M-2	PLAN - OVERALL
M-3	PLAN - ADMIN
M-4	BLOWER BUILDING MECHANICAL PLAN
M-5	SCHEDULES
M-6	SCHEDULES
M-7	DETAILS
M-8	DETAILS
M-9	DETAILS

PROCESS AND INSTRUMENTATION

P-1	DIAGRAM LEGEND AND ABBREVIATIONS
P-2 - P-26	DIAGRAM

PLUMBING

PL-1	LEGEND AND NOTES
PL-2	SANITARY PLAN
PL-3	SANITARY PLAN
PL-4	SANITARY WASTE AND VENT RISER
PL-5	DOMESTIC WATER RISER
PL-6	DETAILS
PL-7	DETAILS

STRUCTURAL

XGI-02	ABBREVIATIONS AND SYMBOLS
G-S1	GENERAL CONSTRUCTION NOTES
G-S2	GENERAL STRUCTURAL STANDARD DETAILS I
G-S3	GENERAL STRUCTURAL STANDARD DETAILS II
G-S3	GENERAL STRUCTURAL STANDARD DETAILS III
G-S5	GENERAL STRUCTURAL STANDARD DETAILS IV
HW-S1	HEADWORKS FRAMING PLAN
HW-S2	HEADWORKS PLAN & SECTION
HW-S3	HEADWORKS BUILDING SECTIONS
HW-S4	HEADWORKS BUILDING SECTIONS
HW-S5	HEADWORKS BUILDING SECTIONS
HW-S6	HEADWORKS WALL SECTIONS
HW-S7	HEADWORKS WALL SECTIONS
HW-S8	HEADWORKS WALL SECTIONS
HW-S9	HEADWORKS WALL SECTIONS
HW-S10	HEADWORKS ELEVATIONS
HW-I1	HEADWORKS ROOF PLAN
HW-I1	EFFLUENT LIFT STATION
SBR-S1	SEQUENCING BATCH REACTOR FLOOR PLAN
SBR-S2	SEQUENCING BATCH REACTOR SECTIONS
SBR-S3	SEQUENCING BATCH REACTOR WALL SECTIONS
SBR-S4	SEQUENCING BATCH REACTOR WALL SECTIONS
SBR-S5	SEQUENCING BATCH REACTOR WALL SECTIONS
UV-S1	UV DISINFECTION PLAN AND SECTION
UV-S2	UV DISINFECTION TRANSVERSE SECTIONS
UV-S3	UV DISINFECTION WALL SECTIONS
PF-S1	PARSHALL FLUME FLOOR PLAN
PF-S2	PARSHALL FLUME WALL SECTION
ELS-S1	EFFLUENT LIFT STATION FOUNDATION & FRAMING PLAN
ELS-S2	EFFLUENT LIFT STATION PLAN & SECTIONS
ELS-S3	EFFLUENT LIFT STATION WALL SECTIONS
ELS-S4	EFFLUENT LIFT STATION WALL SECTIONS
ELS-S5	EFFLUENT LIFT STATION WALL SECTIONS
ELS-S6	EFFLUENT LIFT STATION ELEVATIONS
ELS-S7	EFFLUENT LIFT STATION ROOF PLAN
SW RLS-S1	STORMWATER RETURN LIFT STATION FLOOR PLAN



WALL ENGINEERING
223 N. WASHINGTON AVE., DURANT, OK 74701
OKLAHOMA CA #5413 EXP. JUNE 30, 2023

SUBMITTAL / REVISIONS:

DATE	BY	SUBMITTAL / REVISION
03/22	JR	ODEQ SUBMITTAL
06/22	JR	ISSUED FOR BIDDING

SHAWNEE MUNICIPAL AUTHORITY
WASTEWATER SYSTEM IMPROVEMENTS
CONTRACT DOCUMENTS VOL. 4 OF 6 - NORTHSIDE WWTP

INDEX OF SHEETS

PROJECT NO.
SHN-20-01

DATE
06/22

DRAWN BY:
JR

CHECKED BY:
BW

REVIEWED BY:
DBW

SCALE:
AS NOTED

BAR IS ONE INCH ON ORIGINAL DRAWING
0" 1"
IF NOT ONE INCH ON THIS SHEET, ADJUST SCALES ACCORDINGLY

SHEET

S.1.

PLAT OF SURVEY

PART OF THE SW/4, SECTION 21, T-11-N, R-4-E, I.M. SHAWNEE, POTTAWATOMIE COUNTY, OKLAHOMA

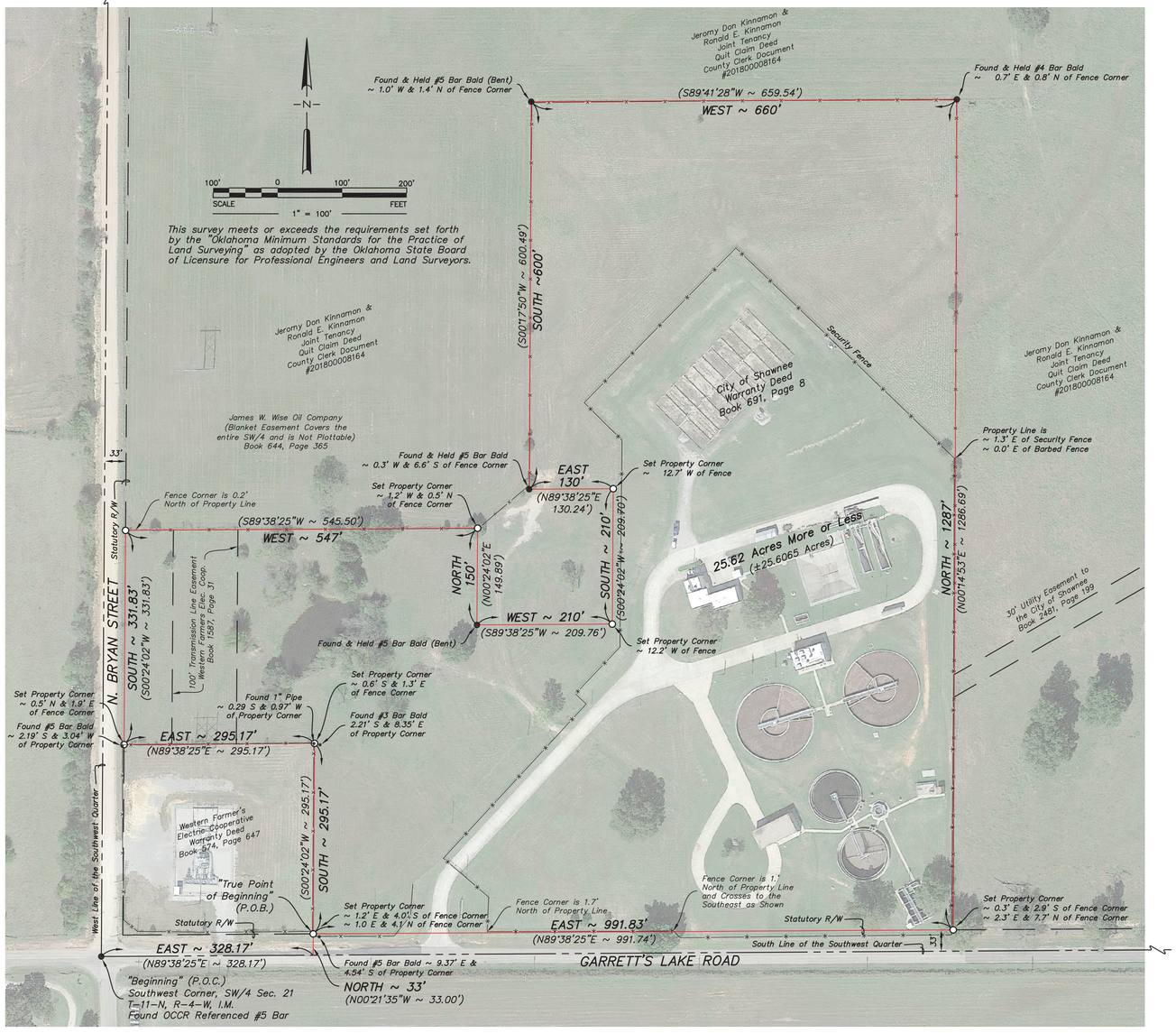

LEGEND

- BARBED WIRE FENCE
- SECURITY FENCE
- MONUMENT FOUND
- SET #4 BAR W/ "CA 6975" CAP UNLESS OTHERWISE NOTED

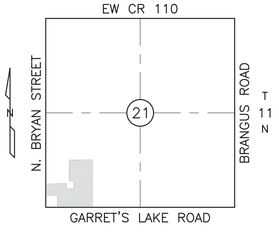

LOCATION MAP

LEGAL DESCRIPTION (DEED)

Beginning at the Southwest Corner of the Southwest Quarter of Section Twenty-one (21), Township Eleven (11) North, Range Four (4) East of the Indian Meridian, Pottawatomie County, Oklahoma;

thence East along the South line of said SW/4 a distance of 328.17 feet;

thence North and parallel to the West line of said SW/4 a distance of 33 feet to the true point of beginning;

thence East parallel to and 33 feet North of the South line of said SW/4 a distance of 991.83 feet;

thence North and parallel to the West line of said SW/4 a distance of 1287 feet;

thence West and parallel to the South line of said SW/4 a distance of 660 feet;

thence South and parallel to the West line of said SW/4 a distance of 600 feet;

thence East and parallel to the South line of said SW/4 a distance of 130 feet;

thence South and parallel to the West line of said SW/4 a distance of 210 feet;

thence West and parallel to the South line of said SW/4 a distance of 210 feet;

thence North and parallel to the West line of said SW/4 a distance of 150 feet;

thence West and parallel to the South line of said SW/4 a distance of 547 feet to a point 33 feet East of the West line of said SW/4;

thence South parallel to and 33 feet East of the West line of said SW/4 a distance of 331.83 feet to a point, said point being 328.17 feet North of and 33 feet East of the Southwest Corner of the Southwest Quarter;

thence East and parallel to the South line of said SW/4 a distance of 295.17 feet;

thence South and parallel to the West line of said SW/4 a distance of 295.17 feet to the true point of beginning; said tract containing 25.62 acres, more or less.

SURVEYOR'S LEGAL DESCRIPTION (FIELD)

SURVEYOR'S LEGAL DESCRIPTION
(Based on Field Survey)

A parcel of land situated in the Southwest Quarter of Section 21, Township 11 North, Range 4 East of the Indian Meridian, Pottawatomie County, Oklahoma, and being more particularly described by metes and bounds as follows:

Commencing at the Southwest Corner of said Southwest Quarter;

Thence North 89° 38' 25" East, along the south line of said Southwest Quarter, a distance of 328.17 feet;

Thence North 00° 21' 35" West, perpendicular to the south line of said Southwest Quarter, a distance of 33.00 feet to a point on the north statutory right-of-way line of Garrett's Lake Road and the POINT OF BEGINNING (a #4 Bar with CA6975 Cap set for corner);

Thence North 89° 38' 25" East, parallel with the south line of said Southwest Quarter and along said north statutory right-of-way line, a distance of 991.74 feet (to a #4 Bar with CA6975 Cap set for corner);

Thence North 00° 14' 53" East a distance of 1286.69 feet (to a bald #4 Bar found for corner);

Thence South 89° 41' 28" West a distance of 659.54 feet (to a bald #5 Bar found for corner);

Thence South 00° 17' 50" West a distance of 600.49 feet (to a bald #5 Bar found for corner);

Thence North 89° 38' 25" East a distance of 130.24 feet (to a #4 Bar with CA6975 Cap set for corner);

Thence South 00° 24' 02" West a distance of 209.70 feet (to a #4 Bar with CA6975 Cap set for corner);

Thence South 89° 38' 25" West a distance of 209.76 feet (to a bald #5 Bar found for corner);

Thence North 00° 24' 02" East a distance of 149.89 feet (to a #4 Bar with CA6975 Cap set for corner);

Thence South 89° 38' 25" West a distance of 545.50 feet to a point on the east statutory right-of-way line of North Bryan Street (a #4 Bar with CA6975 Cap set for corner);

Thence South 00° 24' 02" West, parallel with the west line of said Southwest Quarter and along said east statutory right-of-way line, a distance of 331.83 feet (to a #4 Bar with CA6975 Cap set for corner);

Thence North 89° 38' 25" East a distance of 295.17 feet (to a #4 Bar with CA6975 Cap set for corner);

Thence South 00° 24' 02" West a distance of 295.17 feet to the POINT OF BEGINNING and containing 25.6065 acres more or less and subject to easements and/or rights-of-way that may or may not be of record.

Basis of Bearings: Grid North of the Oklahoma State Plane Coordinate System – NAD83(86) – South Zone

Note: This Surveyor's Legal Description describes a parcel identical to that described in Warranty Deed recorded at Book 691, Page 8, Pottawatomie County Clerk Register of Deeds.

CERTIFICATION:
This is to certify that this PLAT OF SURVEY and the field survey that it is based upon were conducted by me and by others operating under my direct supervision.

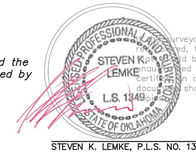

STEVEN K. LEMKE, P.L.S. NO. 1349 DATED: February 24, 2021

Last Site Visit: April 20, 2020

NOTE:
Completion and Delivery of this PLAT OF SURVEY was delayed due to cyber attack (ransomware virus) of Surveyor's electronic file system and the subsequent recovery and replacement of project files by the Surveyor.

SL LEMKE LS LAND SURVEYING

LEMKE LAND SURVEYING
3228 BART CONNER DRIVE,
NORMAN, OK 73075
PH.(405)366-8541 FAX(405)366-8540
CA # 6975 http://www.lemke-ls.com

Mark	Description	Date	Appr.

Project: PLAT OF SURVEY
NORTH WASTE WATER TREATMENT PLANT
Location: PART OF THE SW/4, SEC. 21, T-11-N, R-4-E, I.M.
SHAWNEE, POTTAWATOMIE COUNTY, OKLAHOMA
Client: CITY OF SHAWNEE

Surveyed By:	TC/MD/GT
Drawn By:	TG
Approved By:	SKL
Date:	02/22/2021
Scale:	1" = 100'
Project No:	17074

Sheet Number 1

Sheet 1 of 1

G:\Projects\17074\LLS-Data\Final\User Directory\SKL\WWTP Boundary - 2021 Findlay\SKL - Final Boundary - Feb 19 2021.dwg 2/22/2021 8:51:47 PM

GENERAL

1. ALL NOTES LISTED ON THIS SHEET APPLY TO ALL SHEETS OF THE DRAWINGS AS IF THEY WERE WRITTEN ON EACH SHEET.
2. NOTIFY OWNER 48 HOURS PRIOR TO CONSTRUCTION.
3. VERIFY ALL EXISTING CONDITIONS AND OBSTRUCTIONS INCLUDING LOCATION AND DIMENSIONS BEFORE STARTING WORK AND SHALL NOTIFY THE ENGINEER OF ANY DISCREPANCIES.
4. PRIOR TO INSTALLATION OF RELEVANT FACILITIES CONTRACTOR SHALL, AT HIS OWN EXPENSE, UNCOVER AND OTHERWISE DETERMINE THE DEPTH OF UTILITIES WHICH, IN HIS OPINION, COULD INTERFERE WITH CONSTRUCTION.
5. ALL DIMENSIONS SHOWN WITH ± SHALL BE CONFIRMED BY THE CONTRACTOR ACCORDING TO ACTUAL FIELD CONDITIONS OR EQUIPMENT/STRUCTURE REQUIREMENTS.
6. ALL MISCELLANEOUS REMOVAL ITEMS REQUIRED FOR CONSTRUCTION SHALL BE FIELD LOCATED BY THE CONTRACTOR PRIOR TO BIDDING. THESE ITEMS WILL NOT BE MEASURED FOR PAYMENT AND SHALL BE INCLUDED IN THE PRICE BID FOR ASSOCIATED ITEMS OF WORK.
7. TRAFFIC CONTROL DEVICES SHALL BE FURNISHED AND MAINTAINED BY THE CONTRACTOR THROUGHOUT THIS PROJECT IN ACCORDANCE WITH THE LATEST VERSION OF THE MANUAL OF UNIFORM TRAFFIC CONTROL DEVICES AND/OR AS REQUIRED BY THE DEPARTMENT OF TRANSPORTATION OR COUNTY PERMITS FOR CONSTRUCTION IN RIGHT-OF-WAY.
8. SUBMIT AN EROSION CONTROL PLAN (SWPPP) PRIOR TO CONSTRUCTION AND SHALL MAINTAIN SWPPP THROUGHOUT DURATION OF CONSTRUCTION IN ACCORDANCE WITH SPECIFICATIONS.
9. EXISTING FACILITY AND UTILITY INFORMATION SHOWN ON THE DRAWINGS WAS OBTAINED FROM AVAILABLE RECORDS, LOCATES, AND AVAILABLE FILES. NEITHER THE OWNER NOR THE ENGINEER ASSUMES ANY RESPONSIBILITY FOR FACILITIES AND UTILITIES NOT SHOWN OR NOT IN THE LOCATION SHOWN. THE CONTRACTOR SHALL FIELD VERIFY ALL LOCATIONS, SIZES, MATERIALS, TYPES, AND ELEVATIONS SHOWN AROUND OR NEAR AREAS OF CONSTRUCTION PRIOR TO THE START OF CONSTRUCTION.
10. PERFORM ALL WORK WITHIN DESIGNATED EASEMENTS. CONTRACTOR SHALL NOT ENCROACH OR TRESPASS INTO PRIVATE PROPERTY WITHOUT WRITTEN APPROVAL FROM THE PROPERTY OWNER.
11. MAINTAIN LOCAL AND THROUGH TRAFFIC FOR ALL STREETS AT ALL TIMES WITHOUT CLOSURES OR RESTRICTIONS EXCEPT AS PART OF THE TRAFFIC CONTROL PLAN.
12. MAINTAIN REASONABLE ACCESS TO ALL PROPERTIES AT ALL TIMES. DO NOT RESTRICT DRIVEWAY ACCESS WITHOUT OWNER'S APPROVAL. RESTORE DRIVEWAY ACCESS AT THE END OF EACH DAY. PROVIDE TEMPORARY MEASURES AS NEEDED (SUCH AS GRAVEL) TO MAINTAIN DRIVEWAY ACCESS.
13. KEEP ACCURATE RECORDS OF ALL CONSTRUCTION THAT DEVIATES FROM THE DRAWINGS. THE CONTRACTOR SHALL FURNISH TO THE ENGINEER ACCURATE "AS-BUILT" RED LINE DRAWINGS FOLLOWING COMPLETION OF CONSTRUCTION.
14. TAKE SPECIAL PRECAUTIONS IN THE VICINITY OF ANY OVERHEAD AND UNDERGROUND ELECTRIC LINES. CONTRACTOR SHALL ABIDE BY THE MOST RECENT NATIONAL ELECTRIC CODE FOR WORKING AROUND OVERHEAD ELECTRIC LINES AS WELL AS OTHER LOCAL, STATE OR FEDERALS LAWS / REQUIREMENTS.
15. CONFORM TO ALL APPLICABLE FEDERAL, STATE AND LOCAL LAWS GOVERNING EXCAVATION. TRENCH SIDE SLOPES SHALL MEET OSHA REQUIREMENTS THAT ARE IN EFFECT AT THE TIME OF CONSTRUCTION. CONTRACTOR SHALL SUBMIT A TRENCH SAFETY PLAN PRIOR TO CONSTRUCTION.
16. THIS PROJECT IS SUBJECT TO AMERICAN IRON AND STEEL (AIS) REQUIREMENTS. ALL IRON AND STEEL PRODUCTS FOR CONSTRUCTION, ALTERATION, MAINTENANCE, OR REPAIRS INCORPORATED MUST BE PRODUCED IN THE UNITED STATES.
17. PROVIDE DUST CONTROL AT ALL TIMES DURING CONSTRUCTION.
18. ANY WORK PERFORMED WITHOUT THE KNOWLEDGE OF THE ENGINEER, INSPECTOR OR OWNER'S REPRESENTATIVE IS SUBJECT TO REMOVAL AND REPLACEMENT AT THE CONTRACTOR'S EXPENSE.

EARTHWORK

1. ALL COMPACTED SUBGRADE AND BASE NOT ACCESSIBLE TO MECHANICAL COMPACTION EQUIPMENT SHALL BE HAND COMPACTED USING WHACKER PACKERS.
2. SUBGRADE PREPARATION FOR ALL STRUCTURES AND BUILDINGS ON DRAWINGS SHALL BE AS FOLLOWS: OVER-EXCAVATE 30 INCHES BELOW BASE OF CONCRETE, SCARIFY AND COMPACT TOP 12", COMPACT TO 95% STANDARD PROCTOR DENSITY, INSTALL NON-WOVEN NEEDLE PUNCHED GEOTEXTILE FABRIC, INSTALL 30 INCHES OF CRUSHER RUN AGGREGATE BASE IN 10" LIFTS, COMPACT TO 95% MODIFIED PROCTOR DENSITY. BASE OF CONCRETE SHALL BE CONSIDERED THE BOTTOM OF SLAB AND NOT THE BASE OF FOOTINGS/STEM WALLS. OVER EXCAVATION MAY BE DELETED WHERE ROCK IS PRESENT. #57 ROCK SHALL BE SUBSTITUTED FOR AGG BASE WHERE GROUNDWATER IS PRESENT. ALL FILL MATERIAL REQUIRED TO ACHIEVE FINAL GRADE BELOW THE 30" ROCK LAYER SHALL BE CONSTRUCTED WITH ONSITE OR IMPORTED FILL MATERIAL COMPACTED TO 95% STANDARD PROCTOR DENSITY.
3. ELEVATIONS GIVEN ARE FINISHED GRADE UNLESS OTHERWISE NOTED.
4. NO FIRES WILL BE ALLOWED UNLESS OTHERWISE NOTED. TREES AND BRUSH SHALL BE REMOVED AND DISPOSED OF OFF SITE.
5. NO BLASTING WILL BE ALLOWED.
6. ALL SURFACE DRAINAGE IMPACTED SHALL BE RESTORED TO AS GOOD OR BETTER CONDITION.
7. ALL DISTURBED AREAS SHALL BE LEFT FREE OF RUTS AND TRACKS AND SHALL BE FULLY GRADED TO DRAIN.

GRASSING

1. ANY AND ALL DISTURBED AREAS OUTSIDE OF PLANT FENCING SHALL BE TOPSOILED, HYDROMULCHED, AND WATERED UNTIL ESTABLISHED. ANY AND ALL DISTURBED AREAS INSIDE PLANT FENCING SHALL BE SOLID SLAB SODDED PER SPECIFICATIONS & WATERED UNTIL ESTABLISHED.
2. FOR PIPELINE CONSTRUCTION EXTERNAL TO THE TREATMENT PLANT, ANY AND ALL DISTURBED AREAS SHALL BE TOPSOILED, HYDROMULCHED, AND FERTILIZED, WITH THE EXCEPTION OF RESIDENTIAL YARDS WHICH SHALL RECEIVE SOLID SLAB SOD IN LIEU OF HYDROMULCHING PER SPECIFICATIONS. THIS WORK WILL NOT BE MEASURED FOR PAYMENT. COST SHALL BE INCLUDED IN THE PRICE BID FOR ASSOCIATED ITEMS OF WORK.

DUCTILE IRON PIPE & FITTINGS

1. ALL BURIED DUCTILE IRON PIPE AND FITTINGS SHALL BE PROTECTED IN ACCORDANCE WITH ANSI/AWWA C105/A21.5 "POLYETHYLENE ENCASEMENT FOR GRAY AND DUCTILE IRON PIPE FOR WATER AND OTHER LIQUIDS." THIS ITEM SHALL NOT BE MEASURED FOR PAYMENT AND SHALL BE INCLUDED IN THE PRICE BID FOR ASSOCIATED ITEMS OF WORK.
2. ALL DUCTILE IRON AIR PIPING SHALL BE UNLINED WITH EPDM GASKETS RATED FOR COMPRESSED AIR USAGE (PRESSURE & TEMPERATURE.)
3. ALL DUCTILE IRON PIPING SHALL BE RESTRAINED JOINT.
4. ALL DUCTILE IRON PIPE CONNECTIONS TO P.V.C. SHALL BE MADE WITH A BOLTED CAST TRANSITION COUPLING.
5. ALL EXPOSED FITTINGS SHALL BE FLANGED FITTINGS W/ XYLAN COATED BOLTS AND THICKNESS.
6. ALL MECHANICAL JOINT, FLANGE & MISC. FITTINGS TO HAVE XYLAN COATED BOLTS, NUTS & WASHERS.
7. ALL BURIED FITTINGS SHALL BE D.I. MECHANICAL JOINT (M.J) RESTRAINED (MEGALUG.)
8. WALL PIPES SHALL BE USED WHEREVER PIPING PASSES FROM A STRUCTURE TO EARTHEN BACKFILL.
9. PROVIDE 1/4" ANTI-SEEPAGE RINGS A MINIMUM OF 2" WIDE WELDED TO ALL PIPES PIERCING WATER HOLDING TANKS TO PREVENT SEEPAGE OF WATER BETWEEN PIPE AND CONCRETE. WALL PIPES MAY BE USED IN LIEU OF WELDED RINGS.
10. ALL DUCTILE IRON PIPING LARGER THAN 10" DIAMETER SHALL HAVE CONCRETE SUPPORTS UNLESS OTHERWISE DETAILED. SMALLER PIPING MAY HAVE METAL STAND TYPE SUPPORTS.

CONCRETE

1. CONSTRUCTION JOINTS TO FACILITATE CONSTRUCTION SHALL BE LOCATED AND DETAILED ON THE SHOP DRAWINGS FOR REVIEW. UNLESS INDICATED OTHERWISE, ALL CONSTRUCTION JOINTS SHALL BE KEYED. HORIZONTAL CONSTRUCTION JOINTS SHALL NOT BE PERMITTED IN WALLS AND BEAMS, UNLESS SHOWN ON THE DRAWINGS OR APPROVED BY THE ENGINEER.
2. ALL EXPOSED CORNERS OF CONCRETE STRUCTURES REGARDLESS OF LOCATION SHALL HAVE A 3/4 INCH MINIMUM CHAMFER.
3. ALL EXPOSED EXTERIOR CONCRETE SHALL BE COATED WITH THEROSEAL OR TNEMEC ENVIROCRETE (8ML THICKNESS). SURFACE PREPARATION AND COATING TO BE PER MANUFACTURER'S REQUIREMENTS.
4. ALL GROUTED AREAS OVER 8" THICK SHALL BE REINFORCED WITH WELDED WIRE MESH, 6x6-W2.0xW2.0 MATTS AT 8'-0" CTRS MAX.
5. ANCHOR BOLTS NOT SPECIFIED BY ENGINEER SHALL BE DESIGNED AND STAMPED BY A REGISTERED PROFESSIONAL ENGINEER, RETAINED BY THE CONTRACTOR IN ACCORDANCE WITH APPLICABLE PROJECT AND CODE REQUIREMENTS. SUBMIT AS A SHOP DRAWING FOR REVIEW AND APPROVAL BY THE ENGINEER. COORDINATE LOCATION, SIZE AND EMBEDMENT PRIOR TO CASTING CONCRETE.
6. EXPANSION JOINTS SHALL BE USED WHERE EXTERIOR OF ALL EXISTING AND PROPOSED STRUCTURES AND BUILDINGS ABUT CONCRETE PAVING WHETHER SHOWN ON THE DRAWINGS OR NOT.
7. NO FLY ASH SHALL BE PERMITTED IN CONCRETE MIX DESIGN.
8. TREMIES REQUIRED ON ALL POURS DEEPER THAN 10 FEET.
9. VAPOR BARRIER (10 MIL) REQUIRED BENEATH ALL SLABS.
10. WALKWAYS AND SIDEWALKS SHALL BE POURED WITH SLIGHT SLOPE AND NO LOW SPOTS SO THEY WILL DRAIN FREELY.
11. ALL STRUCTURAL JOINTS SHALL RECEIVE 6" RUBBER CENTER BULB PVC WATERSTOP PLACED AT ALL WATERTIGHT JOINTS.
12. VERTICAL WATERSTOP SHALL BE FULLY EMBEDDED IN SLAB POUR AND WELDED TO ALL ADJACENT WATERSTOP.
13. WHEN WATERSTOP IS PLACED HORIZONTALLY IN SLABS, THE CONTRACTOR SHALL TEMPORARILY TIE UP OR WRAP UP THE WATERSTOP UNTIL THE CONCRETE IS PLACED TO SLIGHTLY ABOVE THE DEPTH OF THE WATERSTOP.
14. ALL CONCRETE SHALL HAVE XYPEX ADMIXTURE PER MANUFACTURE'S SPECIFICATIONS.

BUILDING

1. ALL EXTERIOR DOORS ON ALL BUILDINGS SHALL HAVE R-PANEL AWNING SUPPLIED INTEGRAL WITH METAL BUILDINGS. AWNING ROOF PANELS SHALL MATCH MAIN BUILDING ROOF. AWNINGS SHALL INCLUDE FULL WIDTH GUTTER WITH DOWNSPOUTS.
2. ALL EXTERIOR EXPOSED CMU SHALL BE SPLIT FACE ARCHITECTURAL BLOCK UNLESS OTHERWISE NOTED.
3. ANY R-PANEL USED IN THE BUILDING CONSTRUCTION WHERE NO GAUGE IS SPECIFIED SHALL BE 24 GA. MINIMUM.

PIPING & APPURTENANCES

1. MANHOLES SHALL BE GROUTED INSIDE AND OUT AT ALL JOINTS.
2. ALL NON-POTABLE WATER LINES SHALL BE IN PURPLE COLORED PIPE AND LABELED "DO NOT DRINK". THE WARNING LABEL SHALL BE LOCATED ON OPPOSITE SIDES OF ALL PIPES AND REPEATED EVERY THREE (3) FEET OR LESS.
3. ALL PIPING THAT CROSS VERTICALLY SHALL HAVE AT LEAST 6" SEPARATION.
4. ALL UNDERGROUND FITTINGS SHALL BE DUCTILE IRON MECHANICAL JOINTS (MEGALUG), UNLESS OTHERWISE NOTED.
5. ALL VALVE ASSEMBLIES, VAULTS, PULLS BOXES AND MANHOLES CONSTRUCTED SHALL BE ADJUSTED TO BE FLUSH WITH FINISHED GRADE UNLESS OTHERWISE NOTED. MANHOLES SET IN OPEN FIELDS SHALL BE SET TWELVE INCHES ABOVE FINISHED GRADE AND VAULTS SHALL BE SET 6 INCHES ABOUT FINISHED GRADE.
6. ALL VALVE ASSEMBLIES, VAULTS, PULLS BOXES AND MANHOLES CONSTRUCTED SHALL BE ADJUSTED TO BE FLUSH WITH FINISHED GRADE UNLESS OTHERWISE NOTED.
7. ANY BY-PASS PUMPING AND/OR BY-PASS PIPING INSTALLED SHALL BE OPERATED AND MAINTAINED BY THE CONTRACTOR AT CONTRACTOR'S EXPENSE. THE CONTRACTOR IS RESPONSIBLE FOR ANY UNAUTHORIZED DISCHARGES.
8. CONNECTIONS TO EXISTING UTILITIES SHALL BE MADE IN A TIME AND UNDER CONDITIONS WHICH WILL LEAST INTERFERE WITH SERVICE OF THE OWNER, AND AS AUTHORIZED BY THE ENGINEER AND OWNER. FACILITIES SHALL BE PROVIDED FOR PROPER DEWATERING AND FOR DISPOSAL OF ALL WATER/WASTEWATER REMOVED TO ADJACENT PROPERTY FROM DEWATERED LINES WITHOUT DAMAGE.
9. MAINTAIN THE REQUIRED 10 FOOT HORIZONTAL AND 2 FOOT VERTICAL SEPARATION BETWEEN SANITARY SEWER AND POTABLE WATER MAINS. ALL OTHER PIPING SHALL MAINTAIN A MINIMUM OF 5' SEPARATION.
10. ORDER MANHOLES IN PAVEMENT LOWER THAN PROPOSED GRADE AND BRING THEM TO EXACT GRADE WITH LEVEL RINGS.
11. PROVIDE FREEZE PROTECTION FOR ANY EXPOSED PIPING. FREEZE PROTECTION SHALL CONSIST OF WRAPPED PIPE W/ RIGID ALUMINUM COVERS. FREEZE PROTECTION/INSULATION WILL NOT BE REQUIRED FOR PIPING INSIDE BUILDING, AIR PIPING OR SCADA INSTRUMENTATION CONDUIT.
12. CONTRACTOR SHALL SCHEDULE AND CONDUCT OPERATIONS TO LIMIT AMOUNT OF TRENCH OPENED TO INCLUDE ONLY THAT WHICH MAY BE COVERED IN 2 (TWO) DAYS TIME TO A MAXIMUM OF 200'. ANY TRENCH LEFT OPEN OVERNIGHT SHALL BE BARRICADED AND PROTECTED AS DETAILED IN THE MOST CURRENT EDITION OF THE MANUAL OF UNIFORM TRAFFIC CONTROL DEVICES.
13. SEWER MAINS SHALL BE CONSTRUCTED UTILIZING A LASER WITH GRADE ESTABLISHED THROUGH SEWER PIPE.
14. WHEN TIE-INS TO EXISTING MANHOLES ARE TO BE MADE, CONTRACTOR SHALL VERIFY MANHOLE FLOW LINE AT AN INTERVAL PRIOR TO MANHOLE TO ENSURE ADEQUATE DEPTH OF NEW LINE. WHEN CONSTRUCTING A MANHOLE OVER AN EXISTING LINE, CONTRACTOR SHALL VERIFY EXISTING LINE DEPTHS PRIOR TO MANHOLE CONSTRUCTION.
15. MATERIAL EXCAVATED FROM TRENCH & PIPE BEDDING MATERIALS SHALL NOT BE PLACED ON ADJACENT ASPHALT OR CONCRETE PAVING.
16. A SILT AND VARMINT CAP AND/OR PLUG SHALL BE IN PLACE ON THE OPEN END OF PIPES AT ALL TIMES.
17. DO NOT EXCEED 75% OF MANUFACTURE'S RECOMMENDED MAXIMUM DEFLECTION FOR PIPE JOINTS UNLESS OTHERWISE NOTED.
18. INSTALL TEMPORARY FENCES TO PROTECT HORSES AND LIVESTOCK WHEN NECESSARY.
19. REMOVAL AND REPLACEMENT OF STREET TRAFFIC SIGNS, MAIL BOXES AND OTHER STRUCTURES BY THE CONTRACTOR TO FACILITATE CONSTRUCTION SHALL BE CONSIDERED INCIDENTAL AND BE INCLUDED IN THE PRICE BID.
20. ALL EXISTING PAYMENT TO REMAIN SHALL BE SAWCUT TO ENSURE A STRAIGHT SMOOTH SURFACE. ALL CUTS MADE IN DRIVEWAYS OR OTHER PAVEMENTS SHALL BE MADE IN STRAIGHT PERPENDICULAR LINES. COST TO BE CONSIDERED SUBSIDIARY TO CONTRACTOR'S BID.
21. INSTALL METALLIC TRACER WIRE AND TAPE ON ALL PIPING INSTALLED IN ACCORDANCE WITH SPECIFICATIONS.



TREATMENT PLANT

1. ALL EXPOSED COMPONENTS REGARDLESS OF LOCATION TO BE CORROSION RESISTANT. (GALVANIZED, ALUMINUM, SST, FRP, ETC).
2. PROPERLY INSULATE, GASKET AND PROTECT TRANSITIONS TO DISSIMILAR METALS (DUCTILE-STAINLESS).
3. ALL EXPOSED VALVES SHALL HAVE HANDWHEELS OR LEVERS. CHAINWHEELS TO BE PROVIDED ON ALL ELEVATED VALVING.
4. ALL PLANT PIPING, CONDUIT, DRAINS, EQUIPMENT, PIPING, ELECTRICAL, COMPONENTS, ETC., SHALL BE PROVIDED WITH PIPE AND EQUIPMENT SUPPORTS, PIPE AND EQUIPMENT HANGERS FOR ALL BRACING AND STABILIZATION FOR A COMPLETE SYSTEM AND PROVIDE WALKING ACCESS AREAS FREE AND CLEAR. ALL PIPE SHALL BE PROPERLY PAINTED OR COATED WITH APPROVED PAINT. CONTRACTOR SHALL LABEL UNITS, PIPING, VALVES, TANKS, ETC., WITH PROPER FLOW DIRECTION AND TYPE. LOCATION AND NUMBER OF PIPE HANGERS AND PIPE SUPPORTS SHOWN IN ONLY APPROX. CONTRACTOR SHALL DESIGN SUPPORTS AS SPECIFIED.
5. ALL PVC/CPVC VALVES AND COMPONENTS FOR USE IN CHEMICAL FEED AND AIR PIPING SHALL HAVE VITON SEALS AND SHALL BE RATED FOR PRODUCT BEING CARRIED.
6. ALL SUSPENDED PIPING SHALL BE SUPPORTED AT NOT LESS THAN EVERY 10 FEET. ALL PIPING LARGER THAN 6" DIAMETER MAY REQUIRE ADDITIONAL SUPPORTS PER SUPPORT SUPPLIERS RECOMMENDATIONS AND/OR SPECIFICATION REQUIREMENTS.
7. ALL WATERTIGHT STRUCTURES CONCRETE SHALL HAVE 72 HOUR WATER TEST FOR LEAKAGE ON STRUCTURE BEFORE BACKFILL.
8. DISSIMILAR METALS IN CONTACT SHALL BE PROVIDED WITH GALVANIC SEPARATION.
9. CONTRACTOR SHALL COORDINATE WITH SUPPLIERS AND PROVIDE DRAIN CONDUIT (2" MINIMUM) FOR ANY/ALL ANALYZERS, RPZ, AIR/VAC VALVES, SAMPLERS OR ANY OTHER ITEM INSIDE BUILDING WHICH DISCHARGES INTERMITTENT WATER AND ROUTE TO DRAIN. NO SURFACE DRAINAGE WILL BE PERMITTED.
10. SUPPLY ONE SPARE WASHWATER PUMP.
11. SUBMIT FOR REVIEW ALL EQUIPMENT SIZES, OPERATING WEIGHTS, VIBRATION FORCES, SUPPORT LOCATIONS, ALONG WITH ANY FLOOR OPENINGS, NOTCHES, AND RECESSES REQUIRED BY SUCH EQUIPMENT. CONCRETE SUPPORT PADS AND/OR FRAMING REQUIRED TO SUPPORT SAID EQUIPMENT SHALL NOT BE FABRICATED AND PLACED UNTIL THE CONCRETE SUPPORT PADS AND/OR FRAMING IS APPROVED TO SUPPORT THE EQUIPMENT.
12. PROCESS EQUIPMENT DELIVERIES SHALL BE COORDINATED SO THAT EQUIPMENT COMES TO SITE NO MORE THAN 30 DAYS PRIOR TO INSTALLATION, UNLESS STORED INDOORS WITH CLIMATE CONTROL.
13. AT ALL POINTS UNDERGROUND WHERE PIPING EXITS STRUCTURES AND TRANSITIONS TO NATURAL GROUND OR OTHER AREAS SUBJECT TO GROUND SETTLING OR OTHER POTENTIAL INTRODUCED STRESSES AFTER INSTALLATION, A BELL-FLANGE WALL PIPE W/SEEP RING AND RESTRAINED MECHANICAL JOINT SHALL BE PROVIDED TO ALLOW FOR DEFLECTION WHETHER BEING SHOWN ON DRAWINGS OR NOT.
14. ALL PIPING 18" AND LARGER SHALL HAVE A MINIMUM COVER OF 48"; AND PIPE SMALLER THAN 18" SHALL HAVE A MINIMUM COVER OF 36" UNLESS OTHERWISE NOTED. PIPE SHALL BE ROUTED AS SHOWN UNLESS MINOR REVISIONS ARE NECESSARY TO AVOID EXISTING PIPES, STRUCTURES, ETC. CONTRACTOR SHALL BE RESPONSIBLE FOR FURNISHING ALL FITTINGS AND ADAPTERS REQUIRED TO MAKE THE ROUTING CHANGES. CONTRACTOR SHALL INCLUDE COST IN PRICE BID.
15. WHERE CONFLICTS OCCUR BETWEEN CIVIL AND MEP DRAWINGS CIVIL DRAWINGS SHALL GOVERN. ELECTRICAL CONTRACTOR IS RESPONSIBLE FOR VERIFICATION AND ANY MINOR MODIFICATIONS REQUIRED TO FACILITATE INSTALLATION AS OUTLINED ON CIVIL DRAWINGS.
16. REVIEW OF ANY/ALL SCOPE AND PROPOSALS FURNISHED BY EQUIPMENT SUPPLIERS AND SHALL VERIFY ALL REQUIREMENTS OUTLINED IN PROPOSED EQUIPMENT SCOPE/PROPOSAL HAVE VERIFIED AGAINST THE DRAWINGS PRIOR TO BID. ANY ADJUSTMENTS AND/OR ADDITIONAL WORK/MATERIALS REQUIRED ARE THE RESPONSIBILITY OF THE CONTRACTOR AND NO ADDITIONAL COMPENSATION WILL BE PROVIDED.
17. MAKE CONNECTIONS TO EXISTING PIPE, EQUIPMENT, ETC. AS REQUIRED AND SHALL PROVIDE ALL FITTINGS, ADAPTERS AND APPURTENANCES REQUIRED TO MAKE THE CONNECTIONS. PROVIDE SUPPORTS REQUIRED FOR A RIGIDLY SUPPORTED SYSTEM.
18. TEMPORARILY RELOCATE PIPING AS REQUIRED TO MAINTAIN SERVICE TO THE EXISTING PLANT.
19. MECHANICAL AND ELECTRICAL EQUIPMENT SUPPORTS, ANCHORAGES, OPENINGS, RECESSES, AND REVEALS NOT SHOWN ON THE STRUCTURAL DRAWINGS THAT ARE REQUIRED BY OTHER CONTRACT DRAWINGS SHALL BE PROVIDED PRIOR TO CASTING CONCRETE.
20. PRIOR TO FABRICATION OF NEW PIPING, INCLUDING SPECIAL FITTINGS AND EXCAVATIONS FOR NEW STRUCTURES, ELECTRICAL CONDUIT AND/OR OTHER PROPOSED UTILITIES, CONTRACTOR SHALL BE RESPONSIBLE FOR VERIFYING THE LOCATION OF ALL EXISTING PIPING AND UTILITIES IN THE CONSTRUCTION AREA. AT TIE-IN LOCATIONS, VERIFY THE SIZING OF EXISTING PIPING BEFORE FABRICATION OF NEW PIPING AND FITTINGS. THE CONTRACTOR SHALL INCLUDE THE COST IN HIS BID FOR TEMPORARILY RELOCATING AND REINSTALLING EXISTING UTILITIES AS REQUIRED FOR CONSTRUCTION OF PROPOSED ITEMS.
21. ANY PLANT UTILITY, PIPING, CONDUIT, COMMUNICATION SYSTEM, ELECTRICAL OR INSTRUMENTATION WIRING DAMAGED DURING CONSTRUCTION SHALL BE REPAIRED AND PLACED BACK IN SERVICE BY THE CONTRACTOR ON THE SAME DAY THAT THE DAMAGE OCCURRED. AFTER 24 HOURS OUT OF SERVICE, OWNER WILL HAVE THE OPTION OF HAVING THE REPAIRS MADE BY A SEPARATE CONTRACTOR AND DEDUCTING THE COST OF SAID REPAIRS FROM THE CONTRACT AMOUNT.
22. GALVANIZED STEEL PRODUCTS SHALL NOT BE USED FOR ANY TREATMENT PLANT STRUCTURE / EQUIPMENT CONSTRUCTION UNLESS SPECIFICALLY CALLED OUT / APPROVED.
23. ALL NEW UNISTRUT, ANCHORS, SUPPORT SYSTEMS AND FASTENING HARDWARE TO BE 316 STAINLESS STEEL.
24. BACKFILLING AGAINST STRUCTURES WHICH HAVE A TOP SLAB SHALL BE DONE ONLY AFTER THE TOP SLAB IS IN PLACE AND THE CONCRETE HAS CURED TO 2/3 OF ITS DESIGN STRENGTH, BUT IN NO CASE LESS THAT 4 DAYS.
25. STAGING AREA WILL ONLY BE USED FOR CONSTRUCTION EQUIPMENT AND MATERIALS USED IN THE CONSTRUCTION OF THE PROJECT. CONSTRUCTION DEBRIS SHOULD NOT BE ALLOWED TO ACCUMULATE AND SHOULD BE REMOVED ON A WEEKLY BASIS.
26. INSTALL METALLIC TRACER WIRE AND COLOR CODE FOR ALL PIPE INSTALLED.
27. IN ACCORDANCE WITH OAC 252:656-5-4(C)(1), SANITARY SEWER MUST BE AT LEAST 10-FEET FROM AN EXISTING OR PROPOSED WATERMAIN AND AT LEAST 5-FEET ELECTRICAL OR PETROLEUM LINES. SANITARY SEWERS MUST CROSS AT LEAST 24 INCHES ABOVE OR BELOW WATERMAINS.
28. THE CONTRACTOR SHALL NOT OPEN OR CLOSE ANY VALVES AT THE TREATMENT PLANT AND SHALL ASK FOR THE OWNER'S ASSISTANCE.

ELECTRICAL/CONTROLS/SCADA

1. ALL ELECTRICAL CONSTRUCTION SHALL BE IN STRICT ACCORDANCE WITH ALL N.E.C. AND LOCAL ELECTRICAL CODES.
2. ALL MECHANICAL EQUIPMENT (INCLUDING MCC & PANELS) SHALL RECEIVE HOUSEKEEPING PADS WITH #4 BARS @ 12" O.C.E.W. MINIMUM THICKNESS SHALL BE 6" OR AS REQUIRED FOR ANCHOR BOLT CLEARANCE. ANCHOR BOLTS SLEEVES MAY BE USED PROVIDED THE SLEEVES ARE NON-SHRINK GROUT FILLED WITH 1-1/2" GROUT UNDER EQUIPMENT BASE. ALL PADS SHALL BE ANCHORED TO CONCRETE SLABS BY L BARS (#3 @ 12" O.C.) OR EPOXY ANCHORS.
3. ALL SCADA SYSTEM WIRING SHALL BE CONDUIT ENCASED AND IS NOT SHOWN FOR CLARITY. CONTRACTOR TO PROVIDE PROPOSED CONDUIT LAYOUT WITH SCHEDULE TO ENGINEER FOR APPROVAL PRIOR TO CONSTRUCTION.
4. ALL SURFACE MOUNTED PANELS AND PANEL BOARDS ON THE INTERIOR OF EXTERIOR WALLS OR IN OTHER LOCATIONS CONSIDERED DAMP OR WET AND SHALL BE MOUNTED SO AS TO MAINTAIN A 1/4" MINIMUM AIR SPACE BETWEEN THE ENCLOSURE AND THE WALL.
5. ALL EXTERNAL DISPLAYS SHALL BE PROVIDED WITH A WEATHER SHIELD.
6. REVIEW OF ANY/ALL SCOPE AND PROPOSALS FURNISHED BY EQUIPMENT SUPPLIERS AND SHALL VERIFY ALL ELECTRICAL REQUIREMENTS OUTLINED IN PROPOSED EQUIPMENT SCOPE/PROPOSAL HAVE BEEN ACCOMMODATED BY ELECTRICAL CONTRACTOR.
7. THE WIRING DIAGRAMS, QUANTITY AND SIZE OF WIRES AND CONDUITS REPRESENT A SUGGESTED ARRANGEMENT BASED UPON SELECTED STANDARD COMPONENTS OF ELECTRICAL EQUIPMENT. IF EQUIPMENT SUPPLIED BY THE MANUFACTURER HAS A LARGER LOAD THAN THE VALUE SHOWN OR INDICATED, THE CABLE, CONDUIT AND ELECTRICAL EQUIPMENT SHALL BE ENLARGED AS REQUIRED TO ACCOMMODATE THE HIGHER LOADING. HOWEVER, THE BASIC SEQUENCE AND METHOD OF CONTROL MUST BE MAINTAINED AS INDICATED ON THE DRAWINGS AND/OR SPECIFICATIONS. CONTRACTOR TO PROVIDE PROPOSED CONDUIT LAYOUT WITH SCHEDULE TO ENGINEER FOR APPROVAL PRIOR TO CONSTRUCTION.

WALL ENGINEERING
223 N. WASHINGTON AVE. DURANT, OK 74701
OKLAHOMA CA #6413 EXP. JUNE 30, 2023

SUBMITTAL / REVISIONS:

	DATE	BY	SUBMITTAL / REVISION
1	03/22	JR	ODEQ SUBMITTAL
2	06/22	JR	ISSUED FOR BIDDING

SHAWNEE MUNICIPAL AUTHORITY
WASTEWATER SYSTEM IMPROVEMENTS
CONTRACT DOCUMENTS VOL. 4 OF 6 - NORTHSIDE WWTP

GENERAL CONSTRUCTION NOTES

PROJECT NO. SHN-20-01
DATE 06/22
DRAWN BY: JR
CHECKED BY: BW
REVIEWED BY: DBW
SCALE: NOT TO SCALE

BAR IS ONE INCH ON ORIGINAL DRAWING
0" 1"
IF NOT ONE INCH ON THIS SHEET, ADJUST SCALES ACCORDINGLY

SHEET
C-2



SURVEY CONTROL				
POINT NUMBER	NORTHING	EASTING	ELEVATION	DESCRIPTION
100	755979.987	2298404.993	957.54	#4 BAR W/LEMKE CAP
101	756944.1130	2298915.405	972.93	#4 BAR W/LEMKE CAP
102	757073.9397	2299164.904	974.98	#4 BAR W/LEMKE CAP
103	756268.993	2299158.948	957.22	#4 BAR W/LEMKE CAP
104	756028.4232	2298740.097	960.75	#4 BAR W/LEMKE CAP
HORIZONTAL AND VERTICAL DATUM DERIVED FROM OPUS CONTROL POINTS				
HORIZONTAL DATUM: NAD83 (2011) OKLAHOMA STATE PLANE SOUTH ZONE				
VERTICAL DATUM: NAVD88				

TOPOGRAPHIC LEGEND

- AIR CONDITIONER UNIT
- FIRE HYDRANT
- GROUND TRANSFORMER
- GUARD POST
- LIGHT POLE
- SANITARY SEWER MANHOLE
- TELEPHONE MANHOLE
- POWER POLE
- DOWN GUY
- SANITARY SEWER CLEANOUT
- SIGN
- TELEPHONE RISER
- TRAFFIC/ELECTRIC PULL BOX
- WATER METER
- WATER VALVE BOX
- GROUND LIGHT
- HOSE BIB
- MONITORING WELL
- WATER WELL
- MAILBOX
- ELECTRIC VAULT
- CONTROL POINT
- SECURITY FENCE
- ELECTRIC UNDERGROUND LINE
- OVERHEAD ELECTRIC LINE
- GAS LINE
- SANITARY SEWER LINE
- STORM DRAIN LINE
- UNDERGROUND TELEPHONE LINE
- WATER LINE
- GROUND SURFACE CONTOUR
- CURB AND GUTTER
- SURFACE DRAINAGE FLOWLINE
- CONCRETE
- ASPHALT
- GRAVEL
- BUILDING

NOTE:
1. ALL CONTROL DATA PROVIDED BY LEMKE LAND SURVEYING PER THE FOLLOWING SURVEY SHEETS.

REGISTERED PROFESSIONAL ENGINEER
06/14/22
BRANDON WALL
21108
OKLAHOMA

WALL ENGINEERING
223 N. WASHINGTON AVE., DURANT, OK 74701
OKLAHOMA CA #5413 EXP. JUNE 30, 2023

SUBMITTAL / REVISIONS:

DATE	BY	SUBMITTAL / REVISION
03/22	JR	ODEQ SUBMITTAL
06/22	JR	ISSUED FOR BIDDING

SHAWNEE MUNICIPAL AUTHORITY
WASTEWATER SYSTEM IMPROVEMENTS
CONTRACT DOCUMENTS VOL. 4 OF 6 - NORTHSIDE WWTP

SURVEY DATA/CONTROL SUMMARY

PROJECT NO.
SHN-20-01
DATE
06/22
DRAWN BY:
JR
CHECKED BY:
BW
REVIEWED BY:
DBW
SCALE:
1"=75'

BAR IS ONE INCH ON ORIGINAL DRAWING
0" 1"
IF NOT ONE INCH ON THIS SHEET, ADJUST SCALES ACCORDINGLY

SHEET
C-3A

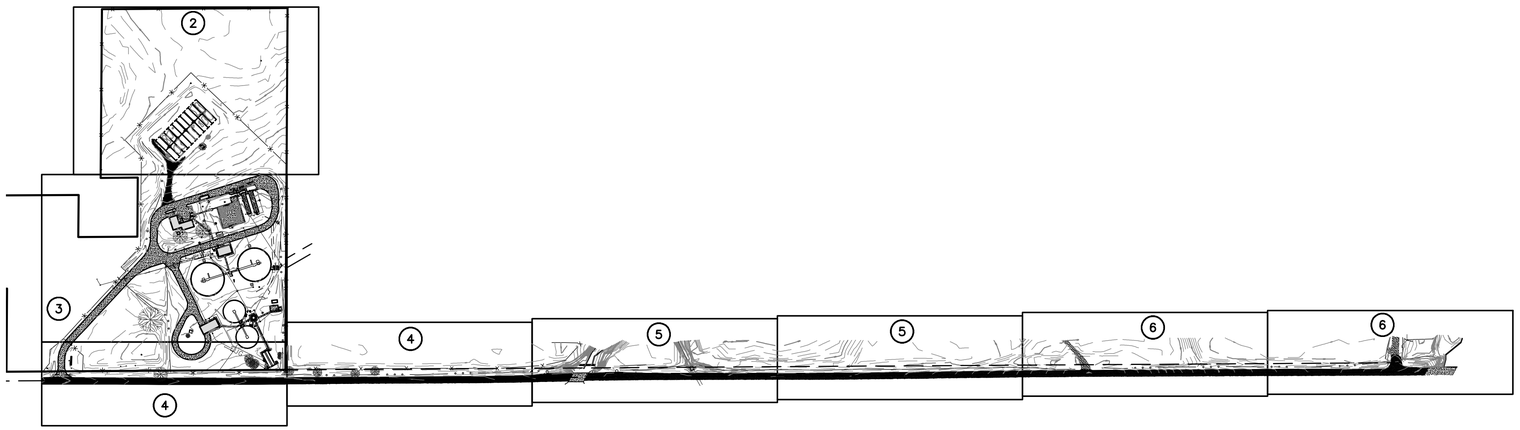

SURVEY CONTROL

POINT NUMBER	NORTHING	EASTING	ELEVATION	DESCRIPTION
100	755979.987	2298404.993	957.54	#4 BAR W/LEMKE CAP
101	756994.113	2298915.405	972.93	#4 BAR W/LEMKE CAP
102	757073.9397	2299164.904	974.98	#4 BAR W/LEMKE CAP
103	756268.993	2299158.948	957.22	#4 BAR W/LEMKE CAP
104	756028.4232	2298740.097	960.75	#4 BAR W/LEMKE CAP
HORIZONTAL AND VERTICAL DATUM DERIVED FROM OPUS CONTROL POINTS				
HORIZONTAL DATUM: NAD83 (2011) OKLAHOMA STATE PLANE SOUTH ZONE				
VERTICAL DATUM: NAVD88				

TOPOGRAPHIC LEGEND

- AIR CONDITIONER UNIT
- FIRE HYDRANT
- GROUND TRANSFORMER
- GUARD POST
- LIGHT POLE
- SANITARY SEWER MANHOLE
- TELEPHONE MANHOLE
- POWER POLE
- DOWN GUY
- SANITARY SEWER CLEANOUT
- SIGN
- TELEPHONE RISER
- TRAFFIC/ELECTRIC PULL BOX
- WATER METER
- WATER VALVE BOX
- GROUND LIGHT
- HOSE BIB
- MONITORING WELL
- WATER WELL
- MAILBOX
- ELECTRIC VAULT
- TD TOTAL DEPTH
- SECURITY FENCE
- ELECTRIC UNDERGROUND LINE
- OVERHEAD ELECTRIC LINE
- GAS LINE
- SANITARY SEWER LINE
- STORM DRAIN LINE
- UNDERGROUND TELEPHONE LINE
- WATER LINE
- GROUND SURFACE CONTOUR
- CURB AND GUTTER
- SURFACE DRAINAGE FLOWLINE
- X 947.65 SPOT ELEVATION
- CONCRETE
- ASPHALT
- GRAVEL
- 957.90 TOP EXTERIOR WALL
- 953.77 INVERT INFLUENT CHANNEL
- 956.59 TOP DIVIDER WALL
- 953.74 INVERT EFFLUENT CHANNEL
- 955.37 TOP INTERNAL WALL
- 957.90 953.77 956.59 ---- ---- COULD NOT ACCESS/REACH FOR ELEVATION



UTILITY WARNING:
The underground utilities shown have been located from record documents or field locations by the operator. The surveyor makes no guarantee that the underground utilities shown comprise all such utilities in the area either in service or abandoned. The surveyor further does not warrant that the underground utilities shown are in the exact location indicated although the surveyor does certify that they are located as accurately as possible from the information available. The surveyor has not physically located the underground utilities.

Utility elevations and sizes may have been measured under adverse field conditions. Upon exposing the utility, elevations and line sizes should be verified by the contractor prior to construction. Contractor should verify critical elevations using the benchmark provided by the surveyor or engineer. Any discrepancies should be immediately brought to the engineer's and surveyor's attention.

OKIE Ticket #17080913422158 & 17080913222068

UTILITIES NOTIFIED:

ONG West OK
OG&E Shawnee
City of Shawnee
Allegiance Comm
Canadian Valley Elec.
AT&T Distribution
Central OK Tele

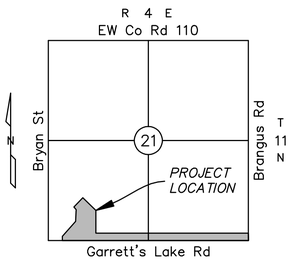

LOCATION MAP

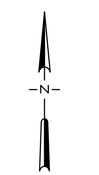

NOT TO SCALE

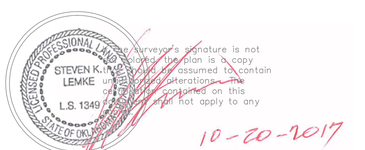

The surveyor's signature is not enclosed, the plan is a copy and should be assumed to contain unauthorized alterations. The original contained on this sheet shall not apply to any

10-20-2017

STEVEN K. LEMKE, P.L.S. NO. 1349 DATED:

Last Date of Survey: October 13, 2017

LEMKE LAND SURVEYING, LLC
3226 BART CONNER DRIVE, NORMAN, OK 73072
PH.(405)366-8541 FAX(405)366-8540
CA # 6975
http://www.lemke-ls.com

Mark	Description	Date	Appr.

Surveyed By: SA/EY/CG/GT
Drawn By: SA
Approved By: SKL
Date: 10/16/2017
Scale: 1" = 30'
Project No: 17074.200

Project: TOPOGRAPHIC SURVEY FOR SHAWNEE NORTHSIDE WASTEWATER TREATMENT PLANT

Project Location: 43100 GARRETT'S LAKE ROAD SHAWNEE, OK

Client: GUERNSEY OKLAHOMA CITY, OK

Sheet Number 1

Sheet 1 of 6

G:\Projects\17074\LLS-Data\Submitted\Shawnee North Plant\DS_Shawnee NORTH WWTP-SA_2009LDD.dwg 10/20/2017 2:29:49 PM

G:\Projects\17074\LLS-Data\Submitted\Shawnee North Plant\DS_Shawnee NORTH WWTP-SA_2009LDD.dwg 10/20/2017 2:31:50 PM

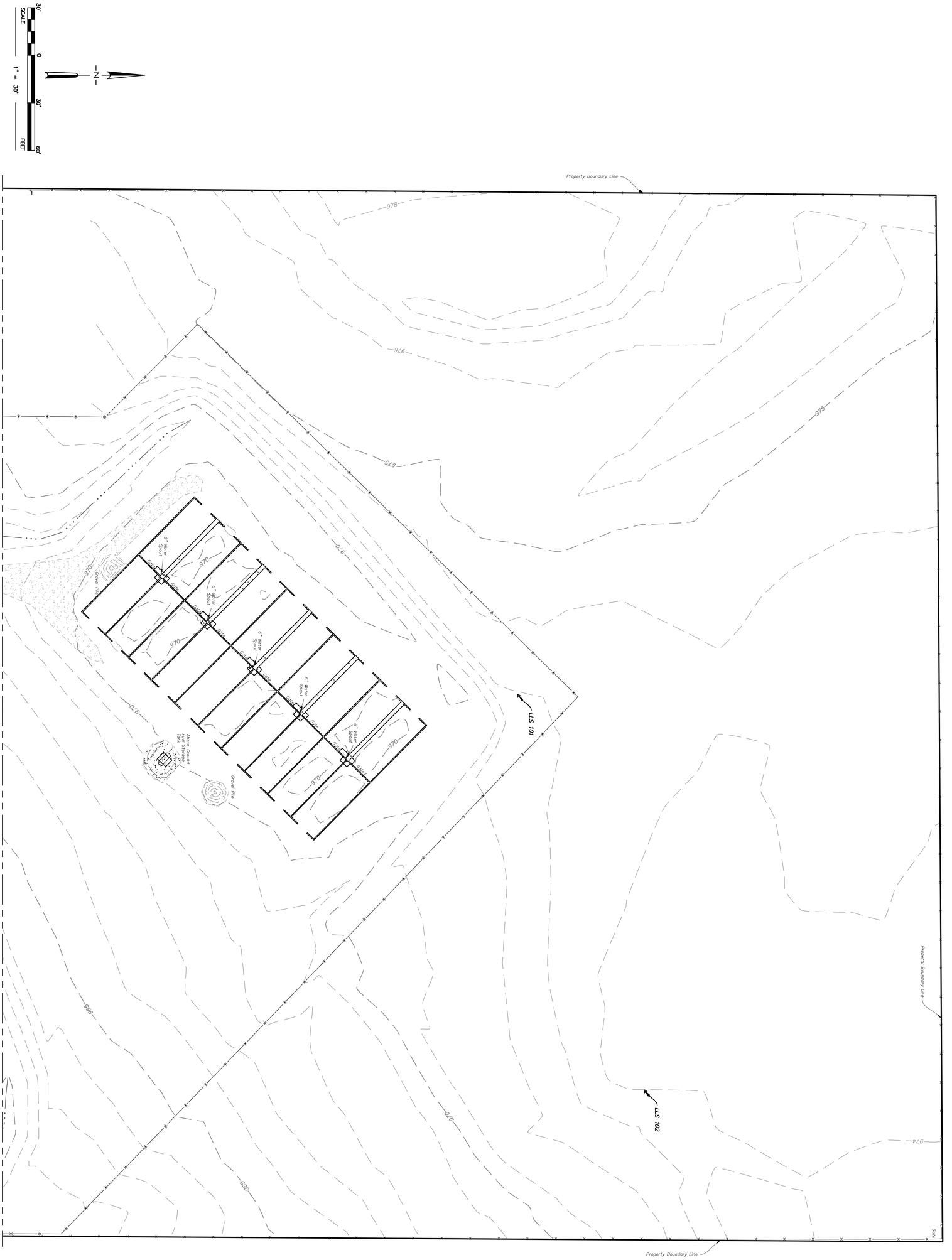

Sheet Number 2 Sheet 2 of 6

Project: TOPOGRAPHIC SURVEY FOR SHAWNEE NORTHSIDE WASTEWATER TREATMENT PLANT

Project Location: 43100 GARRETT'S LAKE ROAD SHAWNEE, OK

Client: GUERNSEY OKLAHOMA CITY, OK

Surveyed By:	SA/EY/CG/GT
Drawn By:	SA
Approved By:	SKL
Date:	10/16/2017
Scale:	1" = 30'
Project No:	17074.200

Mark	Description	Date	Appr.

LEMKE LAND SURVEYING, LLC
3226 BART CONNER DRIVE, NORMAN, OK 73072
PH.(405)366-8541 FAX(405)366-8540
CA # 6975
http://www.lemke-ls.com

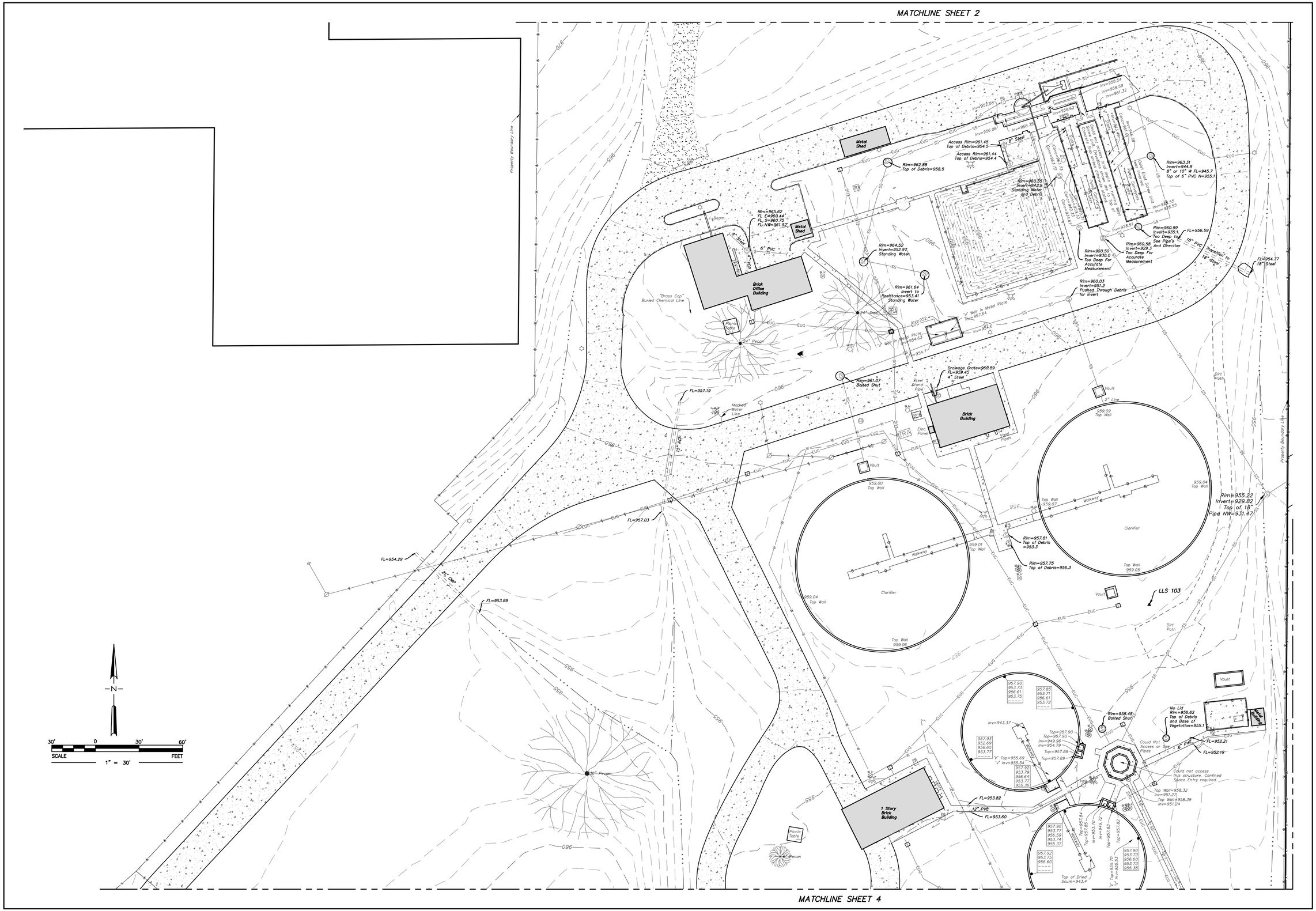

LEMKE LAND SURVEYING, LLC

3226 BART CONNER DRIVE, NORMAN, OK 73072
PH.(405)366-8541 FAX(405)366-8540
CA # 6975
http://www.lemke-ls.com

Mark	Description	Date	Appr.

Surveyed By: SA/EY/CG/GT
Drawn By: SA
Approved By: SKL
Date: 10/16/2017
Scale: 1" = 30'
Project No: 17074.200

Project: TOPOGRAPHIC SURVEY FOR SHAWNEE NORTHSIDE WASTEWATER TREATMENT PLANT

Project Location: 43100 GARRETT'S LAKE ROAD SHAWNEE, OK

Client: GUERNSEY OKLAHOMA CITY, OK

Sheet Number 3

Sheet 3 of 6

G:\Projects\17074\LLS-Data\Submitted\Shawnee North Plant\DS_Shawnee NORTH WWTP-SA_2009LDD.dwg 10/20/2017 2:33:39 PM

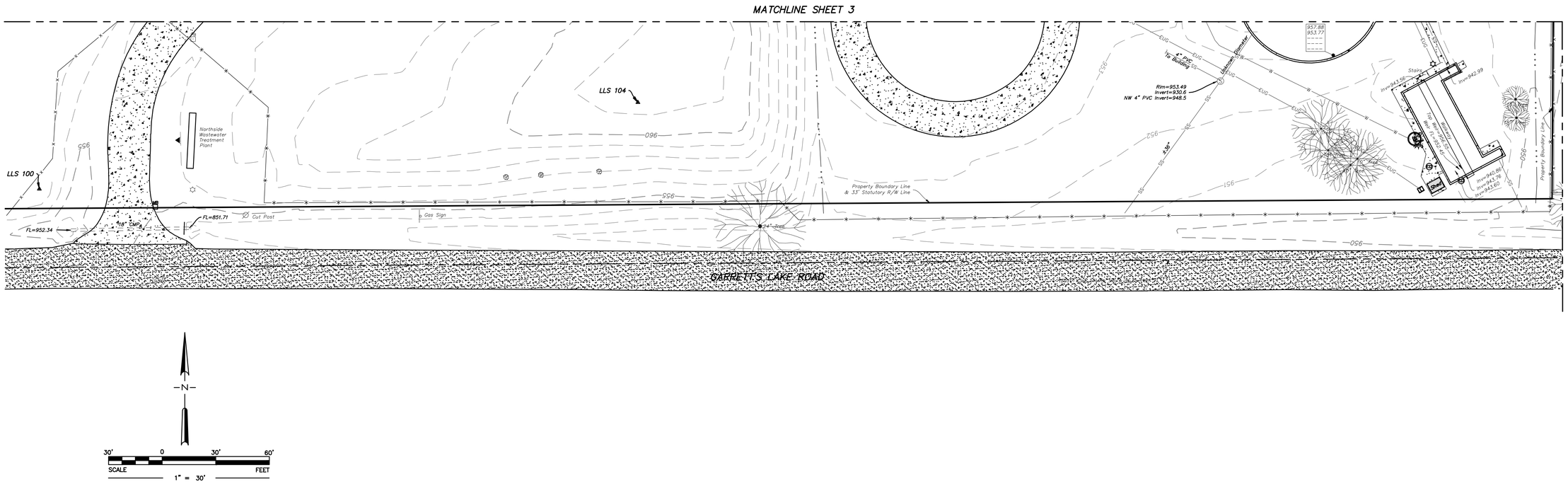

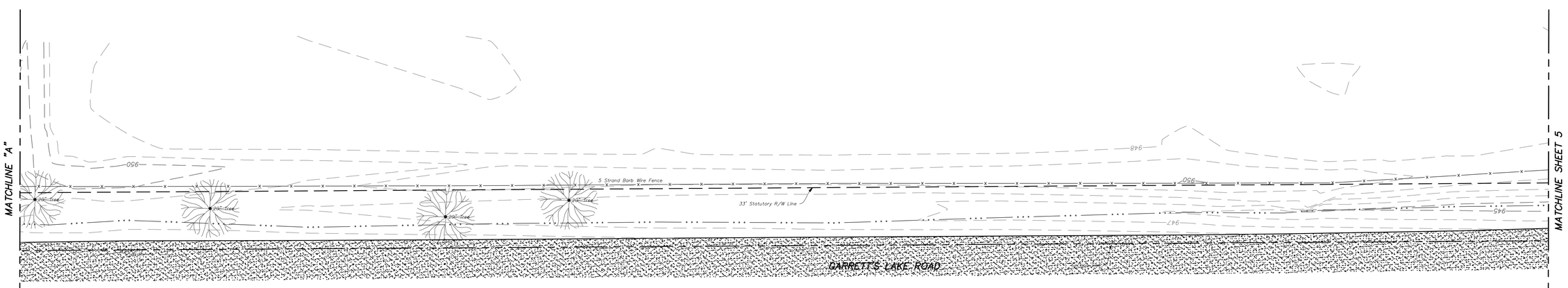

NOTE
Aerial Drone Survey Method Not Effective for the Outfall Corridor due to Tall Grass. Instead, ran ±100' Cross Sections with Supplemental Mapping.

LEMKE LAND SURVEYING, LLC
3226 BART CONNER DRIVE, NORMAN, OK 73072
PH.(405)366-8541 FAX(405)366-8540
CA # 6975
http://www.lemke-ls.com

Mark	Description	Date	Appr.

Surveyed By: SA/EY/CG/GT
Drawn By: SA
Approved By: SKL
Date: 10/16/2017
Scale: 1" = 30'
Project No: 17074.200

Project: TOPOGRAPHIC SURVEY FOR SHAWNEE NORTHSIDE WASTEWATER TREATMENT PLANT
Project Location: 43100 GARRETT'S LAKE ROAD SHAWNEE, OK
Client: GUERNSEY OKLAHOMA CITY, OK

Sheet Number
4
Sheet 4 of 6

G:\Projects\17074\LLS-Data\Submitted\Shawnee North Plant\DS_Shawnee NORTH WWTP-SA_2009LDD.dwg 10/20/2017 2:40:14 PM

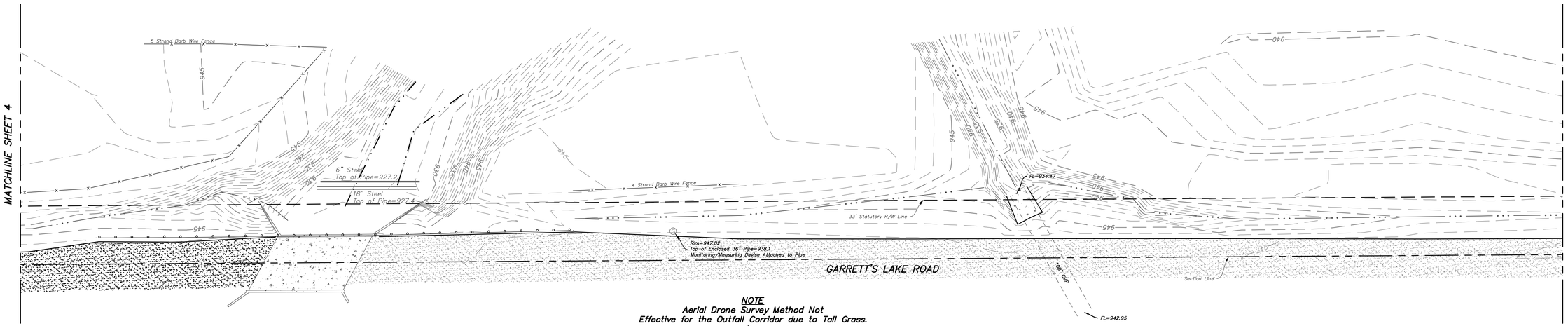

NOTE
Aerial Drone Survey Method Not Effective for the Outfall Corridor due to Tall Grass. Instead, ran ±100' Cross Sections with Supplemental Mapping.

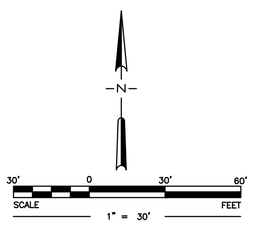

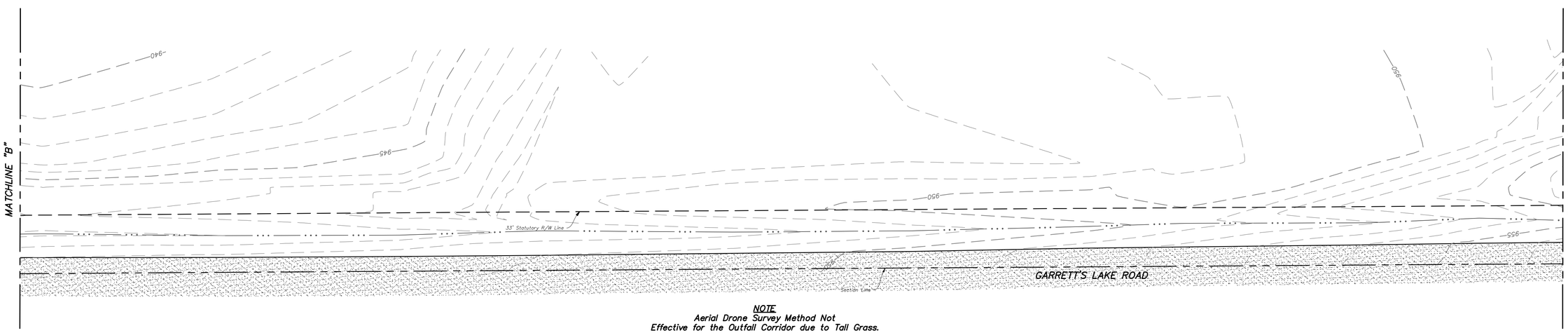

NOTE
Aerial Drone Survey Method Not Effective for the Outfall Corridor due to Tall Grass. Instead, ran ±100' Cross Sections with Supplemental Mapping.

LEMKE LAND SURVEYING, LLC
3226 BART CONNER DRIVE, NORMAN, OK 73072
PH.(405)366-8541 FAX(405)366-8540
CA # 6975
http://www.lemke-ls.com

Mark	Description	Date	Appr.

Surveyed By: SA/EY/CG/GT
Drawn By: SA
Approved By: SKL
Date: 10/16/2017
Scale: 1" = 30'
Project No: 17074.200

Project: TOPOGRAPHIC SURVEY FOR SHAWNEE NORTHSIDE WASTEWATER TREATMENT PLANT
Project Location: 43100 GARRETTS LAKE ROAD SHAWNEE, OK
Client: GUERNSEY OKLAHOMA CITY, OK

Sheet Number
5
Sheet 5 of 6

G:\Projects\17074\LLS-Data\Submitted\Shawnee North Plant\DS_Shawnee NORTH WWTP-SA_2009LDD.dwg 10/20/2017 2:36:42 PM

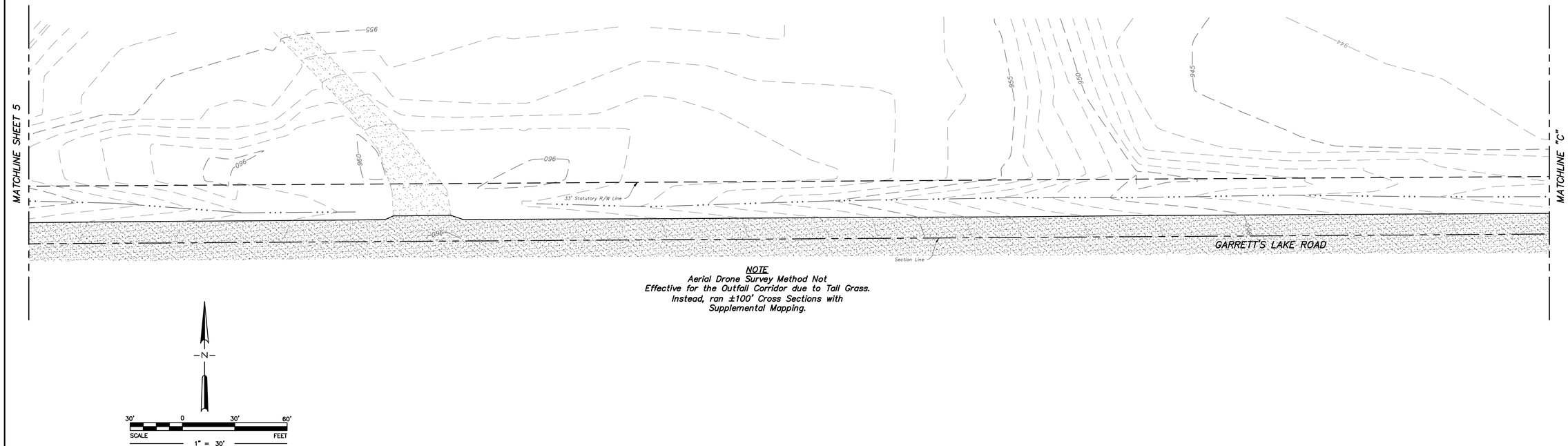

NOTE
Aerial Drone Survey Method Not Effective for the Outfall Corridor due to Tall Grass. Instead, ran ±100' Cross Sections with Supplemental Mapping.

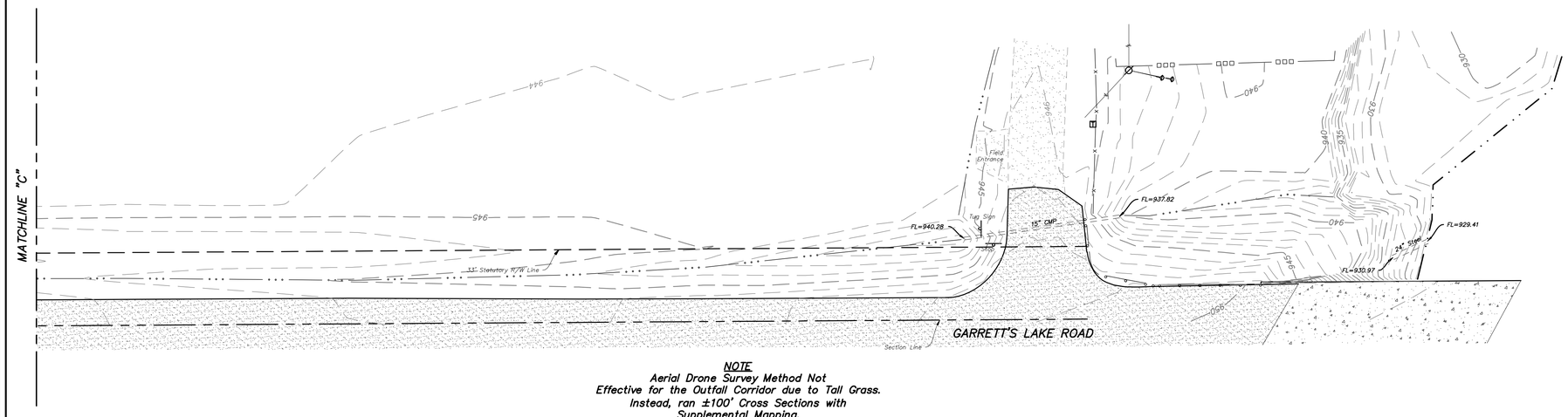

NOTE
Aerial Drone Survey Method Not Effective for the Outfall Corridor due to Tall Grass. Instead, ran ±100' Cross Sections with Supplemental Mapping.

LEMKE LAND SURVEYING, LLC
3226 BART CONNER DRIVE, NORMAN, OK 73072
PH:(405)308-8541 FAX(405)308-8543
CA # 6975
http://www.lemke-la.com

Mark	Description	Date	Appr.

Project: TOPOGRAPHIC SURVEY FOR SHAWNEE NORTHSIDE WASTEWATER TREATMENT PLANT
Project Location: 43100 GARRETTS LAKE ROAD SHAWNEE, OK
Client: GUERNSEY OKLAHOMA CITY, OK

Surveyed By:	SA/EY/CG/GT
Drawn By:	SA
Approved By:	SKL
Date:	10/16/2017
Scale:	1" = 30'
Project No:	17074.200

Sheet Number 6
Sheet 6 of 6

G:\Projects\17074\LLS-Data\Submittal\Shawnee North Plant\DS_Shawnee NORTH WWTP-SA_20208.00.dwg 10/20/2017 2:37:52 PM



EXISTING UNIT LEGEND

- (A) INFLUENT LIFT STATION
- (B) HEADWORKS
- (C) SPLITTER BOX
- (D) MIXING BOX
- (E) AERATION BASIN
- (F) CLARIFIER
- (G) CHLORINE CONTACT CHAMBER
- (H) SLUDGE PUMP STATION
- (I) SLUDGE DRYING BEDS
- (J) EXCESS FLOW HOLDING BASIN
- (K) BLOWER BUILDING
- (L) CHEMICAL BUILDING
- (M) ADMINISTRATION BUILDING

TOPOGRAPHIC LEGEND

- SECURITY FENCE
- ELECTRIC UNDERGROUND LINE
- OVERHEAD ELECTRIC LINE
- GAS LINE
- SANITARY SEWER LINE
- UNDERGROUND TELEPHONE LINE
- WATER LINE
- FIRE HYDRANT
- LIGHT POLE
- SANITARY SEWER MANHOLE
- POWER POLE
- SANITARY SEWER CLEANOUT
- TRAFFIC/ELECTRIC PULL BOX
- WATER METER
- WATER VALVE BOX
- HOSE BIB
- ELECTRIC VAULT
- CONCRETE
- ASPHALT
- GRAVEL
- BUILDING

REGISTERED PROFESSIONAL ENGINEER
06/14/22
BRANDON WALL
21108
OKLAHOMA

WALL ENGINEERING
223 N. WASHINGTON AVE., DURANT, OK 74701
OKLAHOMA CA #5413 EXP. JUNE 30, 2023

SUBMITTAL / REVISIONS:

DATE	BY	SUBMITTAL / REVISION
03/22	JR	ODEQ SUBMITTAL
06/22	JR	ISSUED FOR BIDDING

SHAWNEE MUNICIPAL AUTHORITY
WASTEWATER SYSTEM IMPROVEMENTS
CONTRACT DOCUMENTS VOL. 4 OF 6 - NORTHSIDE WWTP

EXISTING SITE PLAN

PROJECT NO.	SHN-20-01
DATE	06/22
DRAWN BY:	JR
CHECKED BY:	BW
REVIEWED BY:	DBW
SCALE:	1"=75'

BAR IS ONE INCH ON ORIGINAL DRAWING
0" 1"
IF NOT ONE INCH ON THIS SHEET, ADJUST SCALES ACCORDINGLY

SHEET
C-4

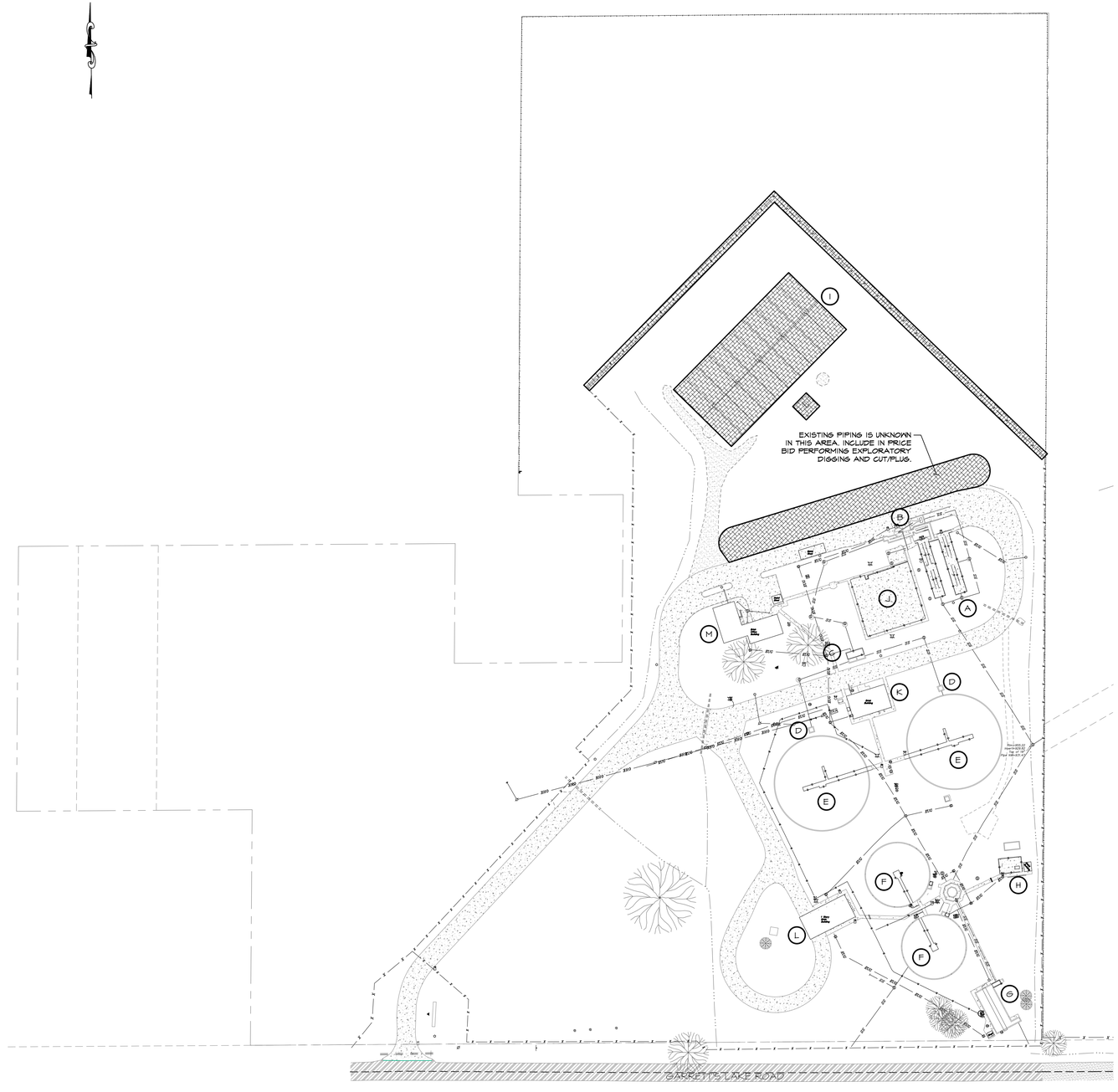

EXISTING UNIT LEGEND

- (A) INFLUENT LIFT STATION
- (B) HEADWORKS
- (C) SPLITTER BOX
- (D) MIXING BOX
- (E) AERATION BASIN
- (F) CLARIFIER
- (G) CHLORINE CONTACT CHAMBER
- (H) SLUDGE PUMP STATION
- (I) SLUDGE DRYING BEDS
- (J) EXCESS FLOW HOLDING BASIN
- (K) BLOWER BUILDING
- (L) CHEMICAL BUILDING
- (M) ADMINISTRATION BUILDING

LEGEND

INITIAL DEMOLITION W/ SLUDGE REMOVAL/DISPOSAL

DEMOLITION SCOPE OF WORK (PRIOR TO PRIMARY CONSTRUCTION)

1. DEWATER & REMOVE SLUDGE FROM DRYING BEDS.
2. DEMOLISH DRYING BEDS & PIPING AS REQUIRED.

NOTES:

1. SLUDGE TO BE REMOVED AND DISPOSED OF BY A SLUDGE REMOVAL CONTRACTOR WITH EXPERIENCE REMOVING & DISPOSING OF MUNICIPAL WASTEWATER TREATMENT PLANT SLUDGE. SEE 02_41_00 DEMOLITION.
2. CUT/PLUG EXISTING MAINS AT LIMITS OF DEMOLITION.

REGISTERED PROFESSIONAL ENGINEER
06/24/22
BRANDON WALL
21108
OKLAHOMA

WALL ENGINEERING
223 N. WASHINGTON AVE., DURANT, OK 74701
OKLAHOMA CA #5413 EXP. JUNE 30, 2023

SUBMITTAL / REVISIONS:

DATE	BY	SUBMITTAL / REVISION
03/22	JR	ODEQ SUBMITTAL
06/22	JR	ISSUED FOR BIDDING

SHAWNEE MUNICIPAL AUTHORITY
WASTEWATER SYSTEM IMPROVEMENTS
CONTRACT DOCUMENTS VOL. 4 OF 6 - NORTHSIDE WWTP

DEMOLITION PLAN - INITIAL

PROJECT NO.	SHN-20-01
DATE	06/22
DRAWN BY:	JR
CHECKED BY:	BW
REVIEWED BY:	DBW
SCALE:	1"=75'

BAR IS ONE INCH ON ORIGINAL DRAWING
0" 1"
IF NOT ONE INCH ON THIS SHEET, ADJUST SCALES ACCORDINGLY

SHEET

C-5A



EXISTING UNIT LEGEND

- (A) INFLUENT LIFT STATION
- (B) HEADWORKS
- (C) SPLITTER BOX
- (D) MIXING BOX
- (E) AERATION BASIN
- (F) CLARIFIER
- (G) CHLORINE CONTACT CHAMBER
- (H) SLUDGE PUMP STATION
- (I) SLUDGE DRYING BEDS
- (J) EXCESS FLOW HOLDING BASIN
- (K) BLOWER BUILDING
- (L) CHEMICAL BUILDING
- (M) ADMINISTRATION BUILDING

LEGEND

TO BE DEMOLISHED/REMOVED

DEMOLITION SCOPE OF WORK (AFTER STARTUP ON PROPOSED EQUIPMENT)

1. COMPLETE CONSTRUCTION, STARTUP, TESTING AND INITIAL OPERATION.
2. CLOSE ALL EXISTING VALVES AND RAW WASTEWATER LINES. VERIFY POSITIVE CLOSURE ON VALVES.
3. DISCONNECT ALL INCOMING ELECTRICAL W/POSITIVE VERIFICATION FROM POWER COMPANY. OFFICE/SHOP ELECTRICAL TO REMAIN.
4. CUT AND PLUG W/ CONCRETE EXISTING WATER/WASTEWATER LINES.
5. DEWATER AND DEMOLISH EXISTING STRUCTURES TO A DEPTH OF 4' BELOW FINAL GRADE.
6. ALL EQUIPMENT, PIPING & MISCELLANEOUS ITEMS IN EXISTING BUILDINGS 'L' & 'M' TO BE REMOVED AND DISPOSED OF.
7. BACKFILL STRUCTURES WITH SELECT FILL AND COMPACT. GRADE TO DRAIN.
8. DISPOSE OF DEMOLISHED MATERIALS OFF SITE IN A LOCATION PROVIDED BY THE CONTRACTOR PER STATE AND FEDERAL REGULATIONS. DISPOSAL INSIDE EXISTING BASINS WILL BE ACCEPTABLE PROVIDED 4' SOIL COVER REQUIREMENTS ARE MET.
9. TOPSOIL AND HYDROMULCH DISTURBED AREAS & WATER UNTIL ESTABILISHED.

NOTES:

1. SLUDGE TO BE REMOVED AND DISPOSED OF BY A SLUDGE REMOVAL CONTRACTOR WITH EXPERIENCE REMOVING & DISPOSING OF MUNICIPAL WASTEWATER TREATMENT PLANT SLUDGE. SEE 02_41_00 DEMOLITION.

2. ALL STRUCTURES AND BUILDINGS SCHEDULED TO REMAIN ARE TO HAVE MISCELLANEOUS EQUIPMENT, PUMPS, ETC. REMOVED & DISPOSED OF.



WALL ENGINEERING
223 N. WASHINGTON AVE., DURANT, OK 74701
OKLAHOMA CA #5413 EXP. JUNE 30, 2023

SUBMITTAL / REVISIONS:

DATE	BY	SUBMITTAL / REVISION
03/22	JR	ODEQ SUBMITTAL
06/22	JR	ISSUED FOR BIDDING

SHAWNEE MUNICIPAL AUTHORITY
WASTEWATER SYSTEM IMPROVEMENTS
CONTRACT DOCUMENTS VOL. 4 OF 6 - NORTHSIDE WWTP

DEMOLITION PLAN - FINAL

PROJECT NO.
SHN-20-01
DATE
06/22
DRAWN BY:
JR
CHECKED BY:
BW
REVIEWED BY:
DBW
SCALE:
1"=75'

BAR IS ONE INCH ON ORIGINAL DRAWING
0" 1"
IF NOT ONE INCH ON THIS SHEET, ADJUST SCALES ACCORDINGLY

SHEET
C-5B

HEADWORKS/INFLUENT LIFT STATION

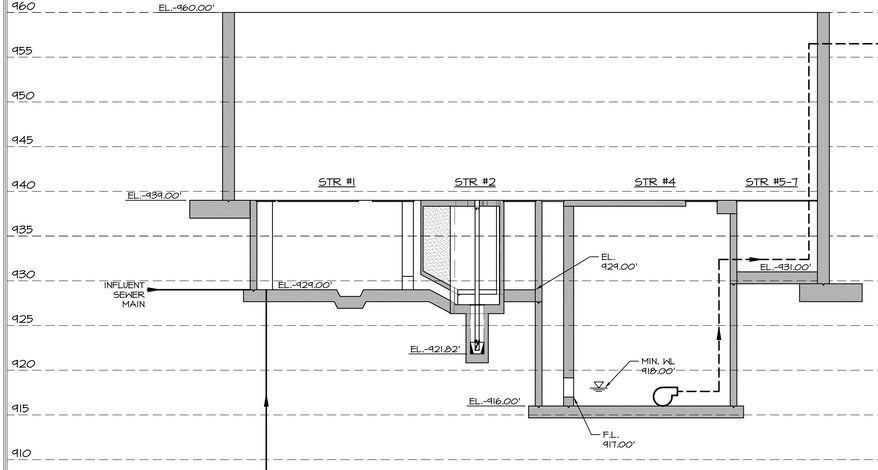

SEQUENCING BATCH REACTOR (NORTH ELEVATION)

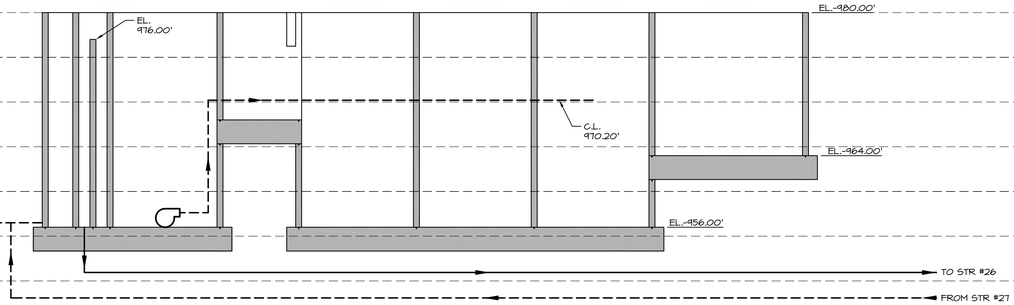

EFFLUENT LIFT STATION

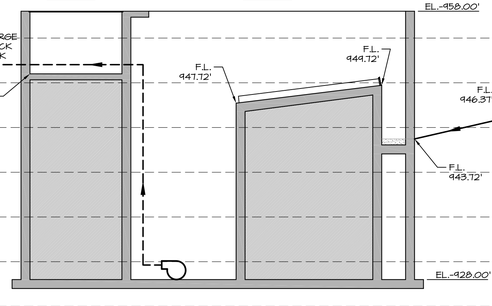

EFFLUENT PARSHALL FLUME

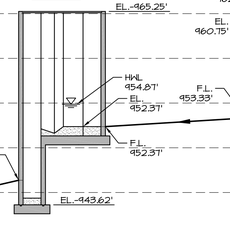

ULTRAVIOLET DISINFECTION

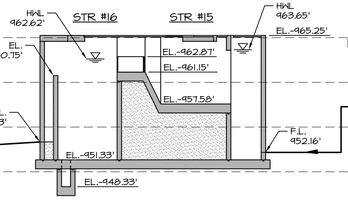

SEQUENCING BATCH REACTOR (SOUTH ELEVATION)

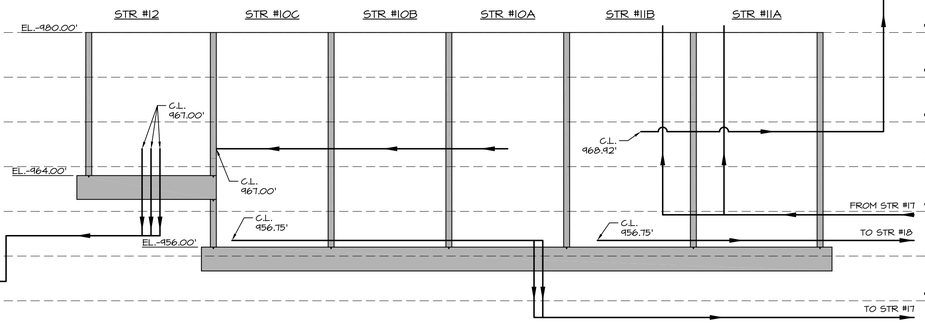

WALL ENGINEERING
223 N. WASHINGTON AVE., DURANT, OK 74701
OKLAHOMA CA #5413 EXP. JUNE 30, 2023

SUBMITTAL / REVISIONS:

DATE	BY	SUBMITTAL / REVISION
03/22	JR	ODEQ SUBMITTAL
06/22	JR	ISSUED FOR BIDDING

SHAWNEE MUNICIPAL AUTHORITY
WASTEWATER SYSTEM IMPROVEMENTS
CONTRACT DOCUMENTS VOL. 4 OF 6 - NORTHSIDE WWTP

HYDRAULIC PROFILE

PROJECT NO.	SHN-20-01
DATE	06/22
DRAWN BY:	JR
CHECKED BY:	BW
REVIEWED BY:	DBW
SCALE:	NOT TO SCALE

BAR IS ONE INCH ON ORIGINAL DRAWING
0" 1"
IF NOT ONE INCH ON THIS SHEET, ADJUST SCALES ACCORDINGLY

REGISTERED PROFESSIONAL ENGINEER
06/24/22
BRANDON WALL
21108
OKLAHOMA

SHEET

C-6A

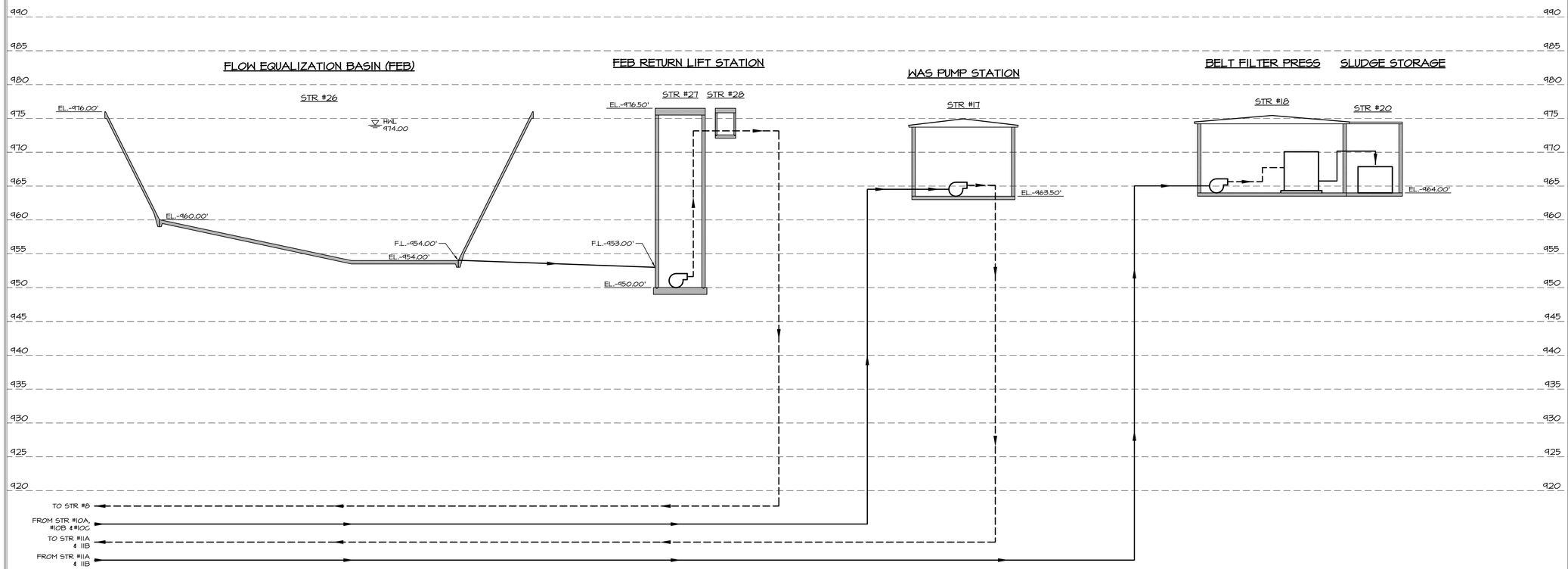

WALL ENGINEERING
223 N. WASHINGTON AVE., DURANT, OK 74701
OKLAHOMA CA #5413 EXP. JUNE 30, 2023

SUBMITTAL / REVISIONS:

DATE	BY	SUBMITTAL / REVISION
03/22	JR	ODEQ SUBMITTAL
06/22	JR	ISSUED FOR BIDDING

SHAWNEE MUNICIPAL AUTHORITY
WASTEWATER SYSTEM IMPROVEMENTS
CONTRACT DOCUMENTS VOL. 4 OF 6 - NORTHSIDE WWTP

HYDRAULIC PROFILE

PROJECT NO.
SHN-20-01

DATE
06/22

DRAWN BY:
JR

CHECKED BY:
BW

REVIEWED BY:
DBW

SCALE:
NOT TO SCALE

BAR IS ONE INCH ON ORIGINAL DRAWING
0" 1"
IF NOT ONE INCH ON THIS SHEET, ADJUST SCALES ACCORDINGLY



SHEET

C-6B

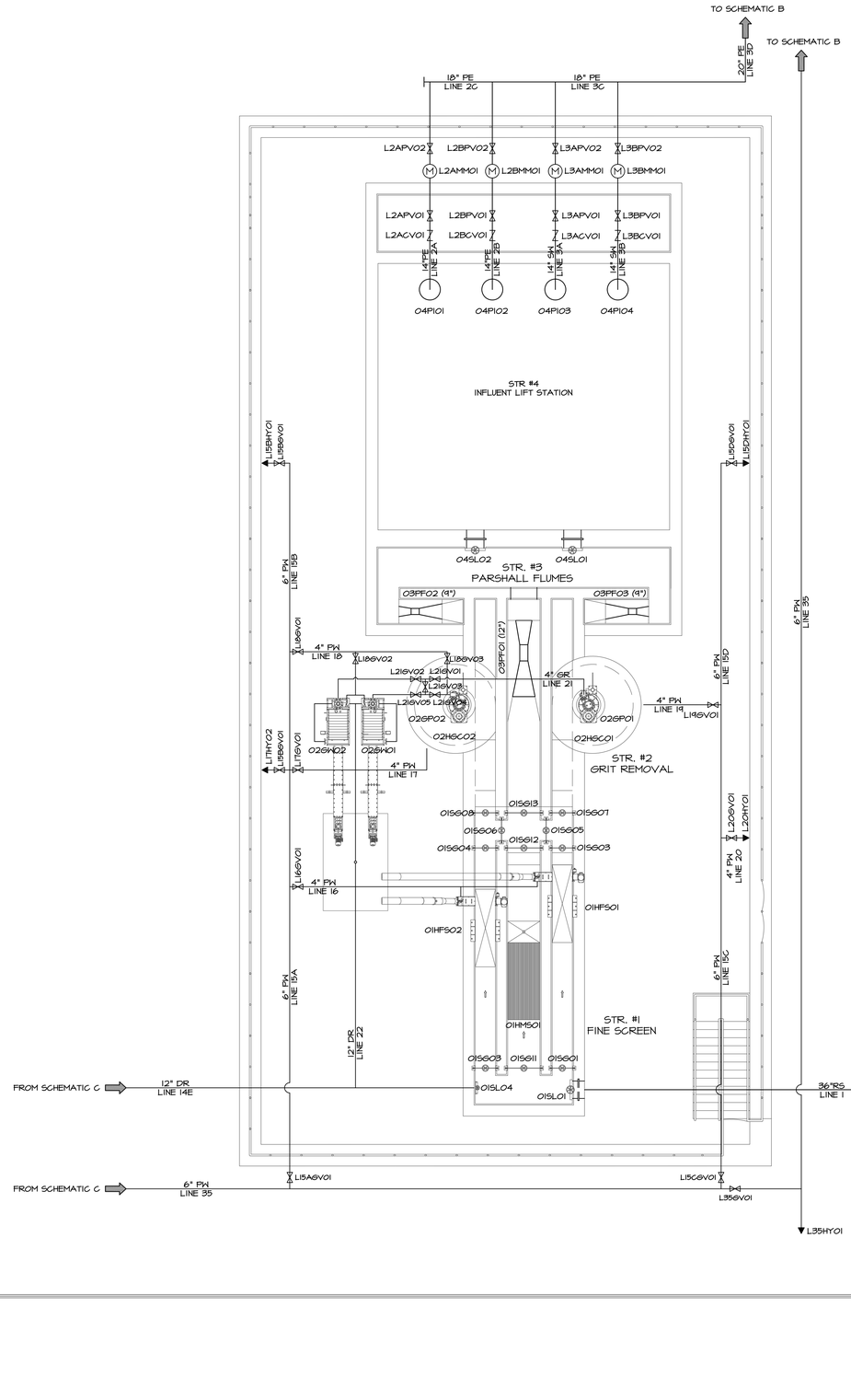

PIPING LEGEND

RS	RAW SEWAGE
PE	PRIMARY EFFLUENT
SE	SECONDARY EFFLUENT
WS	WASTE SLUDGE
SW	STORM WATER
FE	FINAL EFFLUENT
CA	COMPRESSED AIR
PW	POTABLE WATER
NPW	NON POTABLE WATER
DR	DRAIN LINE

UNIT LEGEND

GV	GATE VALVE
PV	PLUG VALVE
CV	CHECK VALVE
PCV	PINCH VALVE
SL	SLUICE GATE
SG	SLIDE GATE
PF	PARSHALL FLUME
FS	FINE SCREEN
MS	MANUAL BAR SCREEN
GR	GRIT REMOVAL
GW	GRIT WASHER
GC	GRIT CHAMBER
GP	GRIT PUMP
HY	HYDRANT
MM	MAGMETER
I.D.	06FV03

I.D.: STRUCTURE NUMBER — VALVE TYPE & I.D.

REGISTERED PROFESSIONAL ENGINEER
6/24/22
BRANDON WALL
21108
OKLAHOMA

WALL ENGINEERING
223 N. WASHINGTON AVE., DURANT, OK 74701
OKLAHOMA CA #5413 EXP. JUNE 30, 2023

SUBMITTAL / REVISIONS:

DATE	BY	SUBMITTAL / REVISION
03/22	JR	ODEQ SUBMITTAL
06/22	JR	ISSUED FOR BIDDING

SHAWNEE MUNICIPAL AUTHORITY
WASTEWATER SYSTEM IMPROVEMENTS
CONTRACT DOCUMENTS VOL. 4 OF 6 - NORTHSIDE WWTP

LIQUID FLOW SCHEMATIC "A"

PROJECT NO.
SHN-20-01
DATE
06/22
DRAWN BY:
JR
CHECKED BY:
BW
REVIEWED BY:
DBW
SCALE:
NOT TO SCALE

BAR IS ONE INCH ON ORIGINAL DRAWING
0" 1"
IF NOT ONE INCH ON THIS SHEET, ADJUST SCALES ACCORDINGLY

SHEET
C-7A

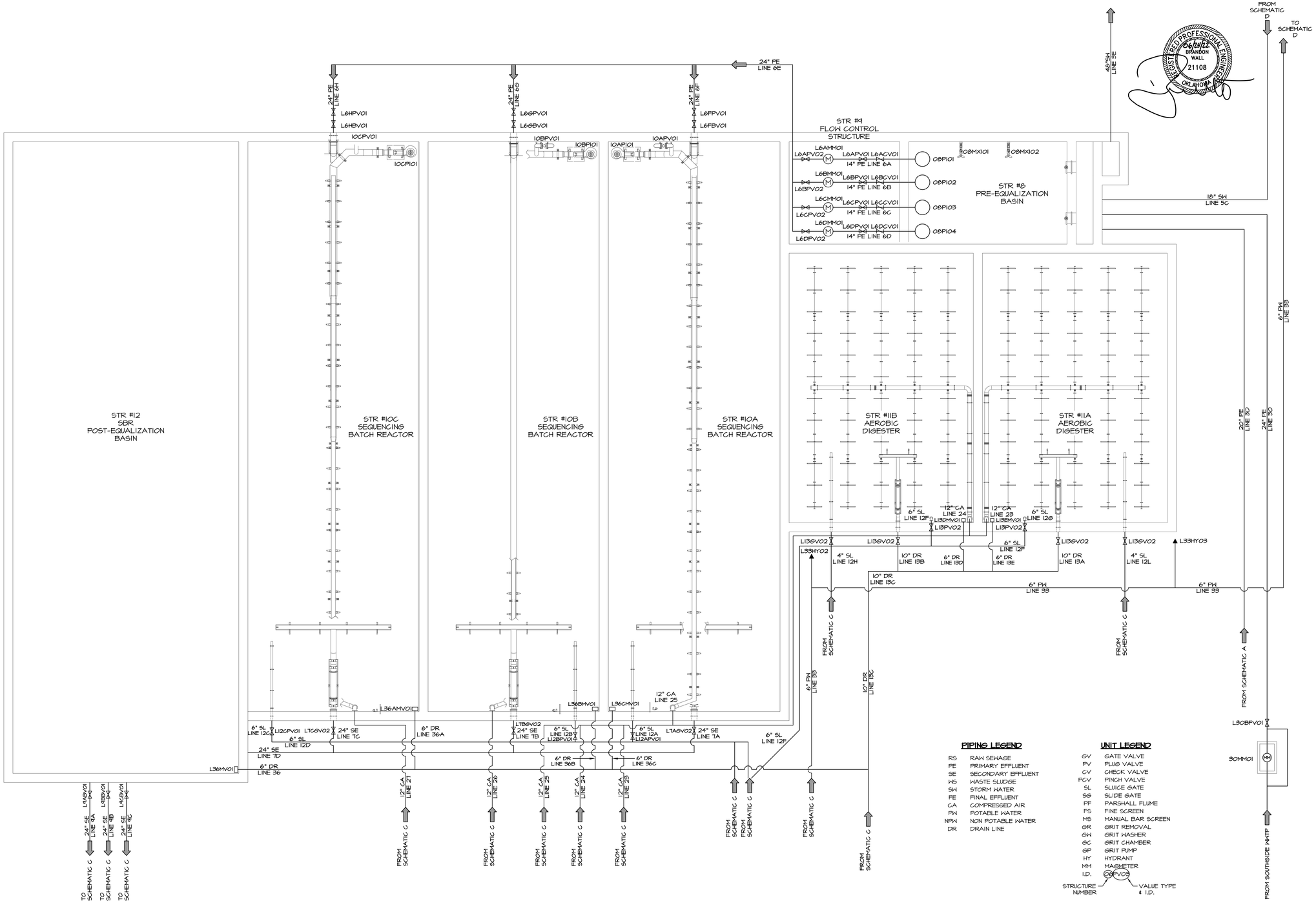

PIPING LEGEND

RS	RAW SEWAGE
PE	PRIMARY EFFLUENT
SE	SECONDARY EFFLUENT
WS	WASTE SLUDGE
SW	STORM WATER
FE	FINAL EFFLUENT
CA	COMPRESSED AIR
PW	POTABLE WATER
NPW	NON POTABLE WATER
DR	DRAIN LINE

UNIT LEGEND

GV	GATE VALVE
PV	PLUG VALVE
CV	CHECK VALVE
PCV	PINCH VALVE
SL	SLUICE GATE
SG	SLIDE GATE
PF	PARSHALL FLUME
FS	FINE SCREEN
MS	MANUAL BAR SCREEN
GR	GRIT REMOVAL
GW	GRIT WASHER
GC	GRIT CHAMBER
GP	GRIT PUMP
HY	HYDRANT
MM	MAGMETER
I.D.	08PV03

STRUCTURE NUMBER — VALUE TYPE & I.D.

WALL ENGINEERING
223 N. WASHINGTON AVE., DURANT, OK 74701
OKLAHOMA CA #5413 EXP. JUNE 30, 2023

REGISTERED PROFESSIONAL ENGINEER
06/14/22
BRANDON WALL
21108
OKLAHOMA

SUBMITTAL / REVISIONS:

DATE	BY	SUBMITTAL / REVISION
03/22	JR	ODEQ SUBMITTAL
06/22	JR	ISSUED FOR BIDDING

SHAWNEE MUNICIPAL AUTHORITY
WASTEWATER SYSTEM IMPROVEMENTS
CONTRACT DOCUMENTS VOL. 4 OF 6 - NORTHSIDE WWTP

LIQUID FLOW SCHEMATIC "B"

PROJECT NO.
SHN-20-01
DATE
06/22
DRAWN BY:
JR
CHECKED BY:
BW
REVIEWED BY:
DBW
SCALE:
NOT TO SCALE

BAR IS ONE INCH ON ORIGINAL DRAWING
0" 1"
IF NOT ONE INCH ON THIS SHEET, ADJUST SCALES ACCORDINGLY

SHEET
C-7B

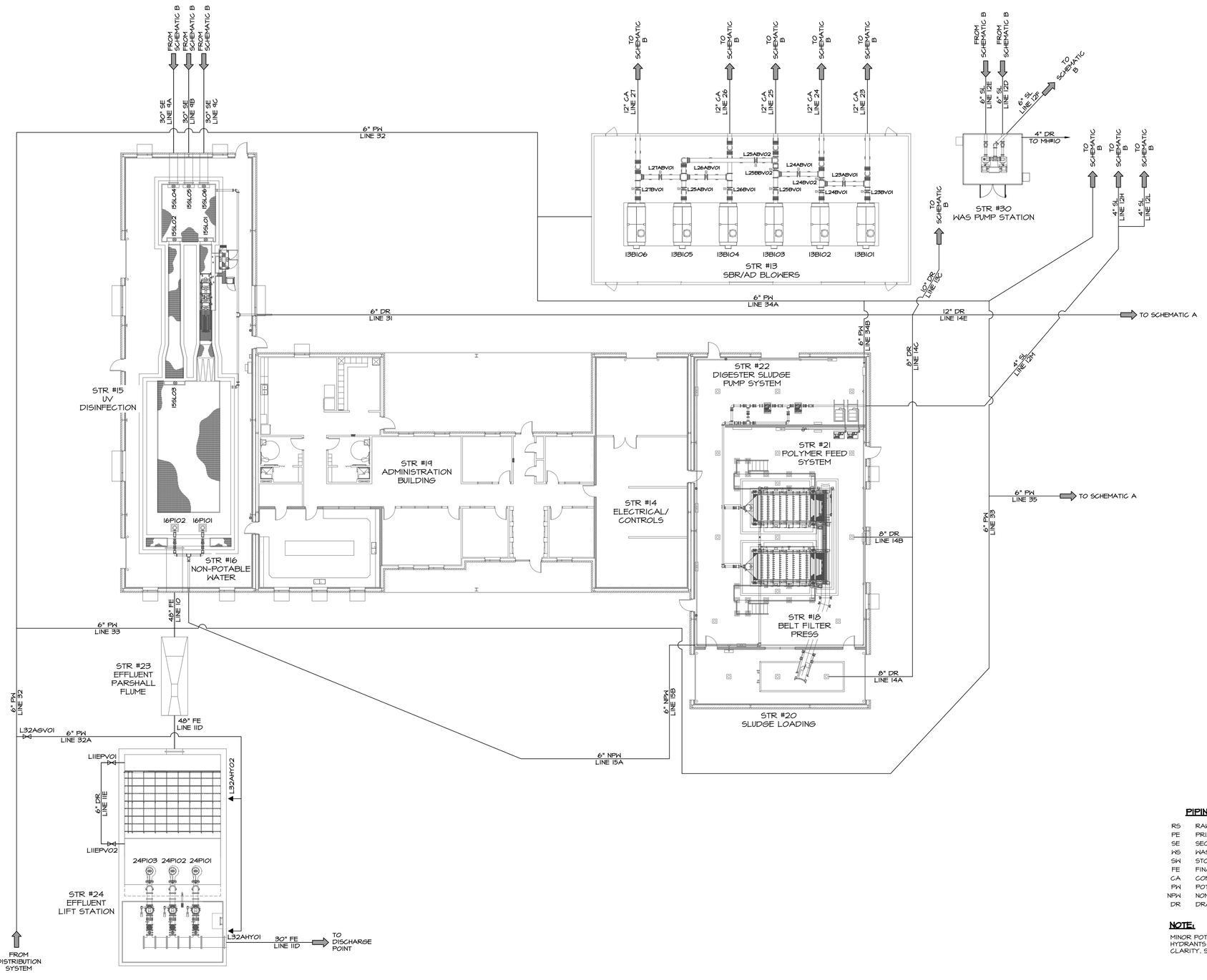

PIPING LEGEND

RS	RAW SEWAGE
PE	PRIMARY EFFLUENT
SE	SECONDARY EFFLUENT
WS	WASTE SLUDGE
SW	STORM WATER
FE	FINAL EFFLUENT
CA	COMPRESSED AIR
PW	POTABLE WATER
NPW	NON POTABLE WATER
DR	DRAIN LINE

UNIT LEGEND

GV	GATE VALVE
PV	PLUG VALVE
CV	CHECK VALVE
PCV	PINCH VALVE
SL	SLUICE GATE
SG	SLIDE GATE
PF	PARSHALL FLUME
FS	FINE SCREEN
MS	MANUAL BAR SCREEN
GR	GRIT REMOVAL
GW	GRIT WASHER
GC	GRIT CHAMBER
GP	GRIT PUMP
HY	HYDRANT
MM	MAGMETER
I.D.	08PV03

STRUCTURE NUMBER — VALVE TYPE & I.D.

NOTE:

MINOR POTABLE WATER & HYDRANTS NOT SHOWN FOR CLARITY. SEE PIPING PLAN.

REGISTERED PROFESSIONAL ENGINEER
BRANDON WALL
21108
OKLAHOMA
6/24/22

WALL ENGINEERING
223 N. WASHINGTON AVE, DURANT, OK 74701
OKLAHOMA CA #5413 EXP. JUNE 30, 2023

SUBMITTAL / REVISIONS:

DATE	BY	SUBMITTAL / REVISION
03/22	JR	ODEQ SUBMITTAL
06/22	JR	ISSUED FOR BIDDING

SHAWNEE MUNICIPAL AUTHORITY
WASTEWATER SYSTEM IMPROVEMENTS
CONTRACT DOCUMENTS VOL. 4 OF 6 - NORTHSIDE WWTP

LIQUID FLOW SCHEMATIC "C"

PROJECT NO.
SHN-20-01

DATE
06/22

DRAWN BY:
JR

CHECKED BY:
BW

REVIEWED BY:
DBW

SCALE:
NOT TO SCALE

BAR IS ONE INCH ON ORIGINAL DRAWING
0" 1"
IF NOT ONE INCH ON THIS SHEET, ADJUST SCALES ACCORDINGLY

SHEET
C-7C

PIPING LEGEND

RS	RAW SEWAGE
PE	PRIMARY EFFLUENT
SE	SECONDARY EFFLUENT
WS	WASTE SLUDGE
SW	STORM WATER
FE	FINAL EFFLUENT
CA	COMPRESSED AIR
PW	POTABLE WATER
NPW	NON POTABLE WATER
DR	DRAIN LINE

UNIT LEGEND

GV	GATE VALVE
PV	PLUG VALVE
CV	CHECK VALVE
PCV	PINCH VALVE
SL	SLUICE GATE
SG	SLIDE GATE
PF	PARSHALL FLUME
FS	FINE SCREEN
MS	MANUAL BAR SCREEN
GR	GRIT REMOVAL
GW	GRIT WASHER
GC	GRIT CHAMBER
GP	GRIT PUMP
HY	HYDRANT
MM	MAGMETER
I.D.	06PV03

STRUCTURE NUMBER — VALVE TYPE & I.D.

REGISTERED PROFESSIONAL ENGINEER
BRANDON WALL
21108
OKLAHOMA
06/24/22

WALL ENGINEERING
223 N. WASHINGTON AVE., DURANT, OK 74701
OKLAHOMA CA #5413 EXP. JUNE 30, 2023

SUBMITTAL / REVISIONS:

DATE	BY	SUBMITTAL / REVISION
03/22	JR	ODEQ SUBMITTAL
06/22	JR	ISSUED FOR BIDDING

SHAWNEE MUNICIPAL AUTHORITY
WASTEWATER SYSTEM IMPROVEMENTS
CONTRACT DOCUMENTS VOL. 4 OF 6 - NORTHSIDE WWTP

LIQUID FLOW SCHEMATIC "D"

PROJECT NO.
SHN-20-01

DATE
06/22

DRAWN BY:
JR

CHECKED BY:
BW

REVIEWED BY:
DBW

SCALE:
NOT TO SCALE

BAR IS ONE INCH ON ORIGINAL DRAWING
0" 1"
IF NOT ONE INCH ON THIS SHEET, ADJUST SCALES ACCORDINGLY

SHEET
C-7D

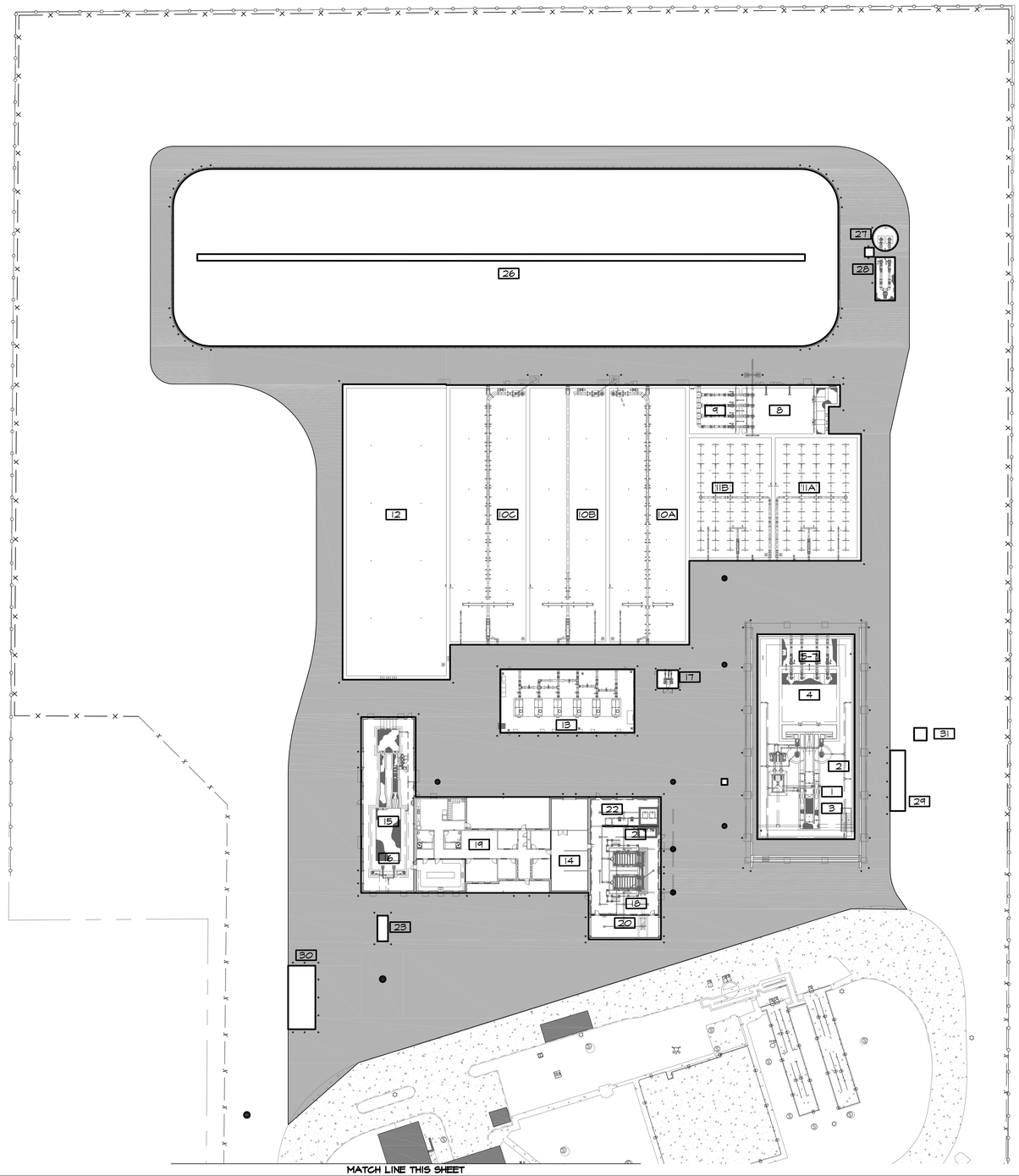

PROPOSED UNIT LEGEND

1. HEADWORKS FINE SCREEN
2. HEADWORKS GRIT CHAMBERS
3. HEADWORKS MANUAL BAR SCREEN
4. INFLUENT LIFT STATION
5. FLOW METER STRUCTURE (ILS-STORM)
6. FLOW METER STRUCTURE (ILS-SBR)
7. FLOW METER STRUCTURE (SS FM)
8. SBR PRE-EQUALIZATION BASIN
9. SBR FLOW CONTROL STRUCTURE
10. SEQUENCING BATCH REACTOR
11. AEROBIC DIGESTER
12. SBR POS-EQUALIZATION BASIN
13. SBR/AD BLOWERS
14. ELECTRIC / CONTROLS
15. UV DISINFECTION
16. NON-POTABLE WATER
17. AD DIGESTED SLUDGE PUMPS
18. BELT FILTER PRESS
19. ADMINISTRATIONS BUILDING
20. SLUDGE LOADING
21. POLYMER FEED SYSTEM
22. NON-POTABLE BOOSTER PUMPS (BFP)
23. EFFLUENT PARSHALL FLUME
24. EFFLUENT LIFT STATION
25. FLOW METER STRUCTURE (ELS)
26. WET WEATHER FLOW EQUALIZATION BASIN
27. FEB RETURN LIFT STATION
28. FLOW METER STRUCTURE (FEBLS)
29. GENERATOR (15KW)
30. GENERATOR (1,750KW)
31. MAG METER VAULT

LEGEND

- EXISTING ASPHALT
- EXISTING GRAVEL
- STRUCTURE
- CONCRETE PAVING
- GRAVEL SURFACE
- SECURITY FENCE
- EXISTING SECURITY FENCE
- EXISTING BARBWIRE FENCE

MATCH LINE THIS SHEET

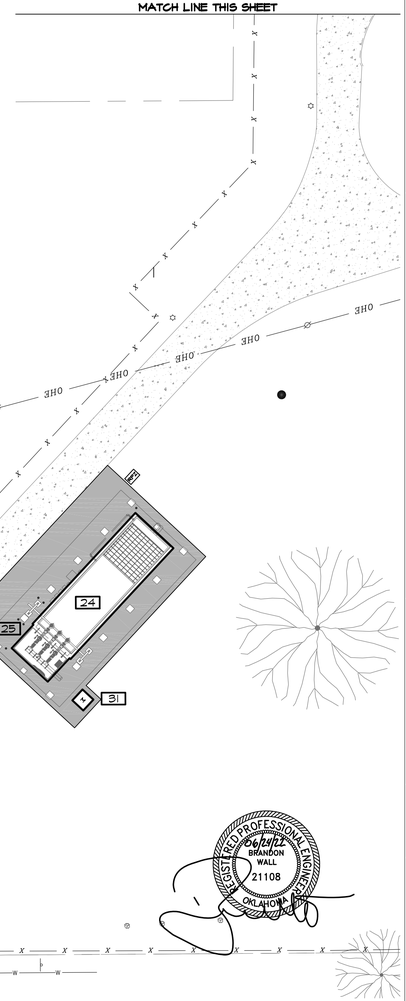

WALL ENGINEERING
223 N. WASHINGTON AVE., DURANT, OK 74701
OKLAHOMA CA #5413 EXP. JUNE 30, 2023

SUBMITTAL / REVISIONS:

DATE	BY	SUBMITTAL / REVISION
03/22	JR	ODEQ SUBMITTAL
06/22	JR	ISSUED FOR BIDDING

SHAWNEE MUNICIPAL AUTHORITY
WASTEWATER SYSTEM IMPROVEMENTS
CONTRACT DOCUMENTS VOL. 4 OF 6 - NORTHSIDE WWTP

SITE PLAN

PROJECT NO.	SHN-20-01
DATE	06/22
DRAWN BY:	JR
CHECKED BY:	BW
REVIEWED BY:	DBW
SCALE:	1"=40'

BAR IS ONE INCH ON ORIGINAL DRAWING
0" 1"
IF NOT ONE INCH ON THIS SHEET, ADJUST SCALES ACCORDINGLY

REGISTERED PROFESSIONAL ENGINEER
06/21/22
BRANDON WALL
21108
OKLAHOMA

SHEET
C-8

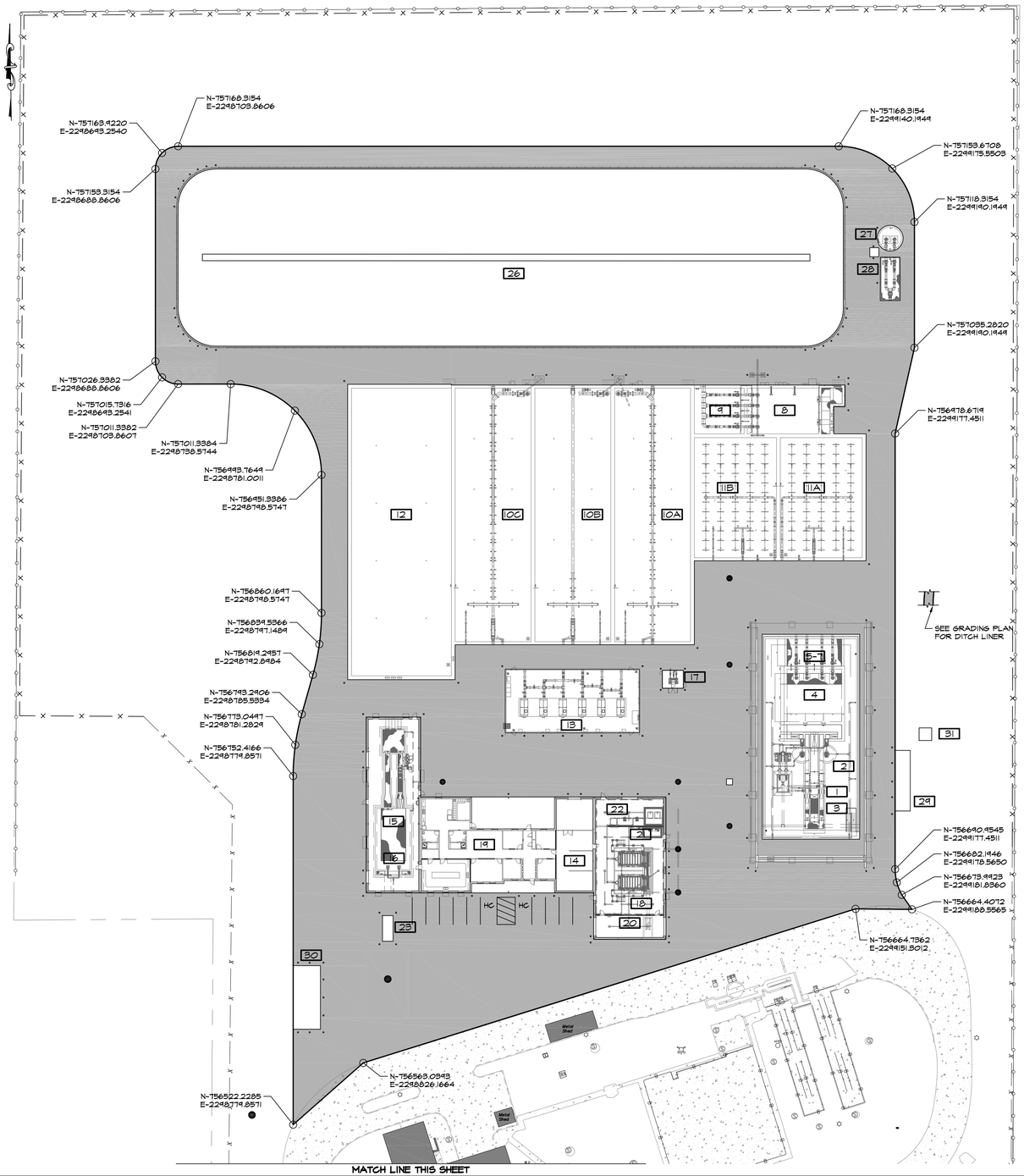

PROPOSED UNIT LEGEND

1. HEADWORKS FINE SCREEN
2. HEADWORKS GRIT CHAMBERS
3. HEADWORKS MANUAL BAR SCREEN
4. INFLUENT LIFT STATION
5. FLOW METER STRUCTURE (ILS-STORM)
6. FLOW METER STRUCTURE (ILS-SBR)
7. FLOW METER STRUCTURE (SS FM)
8. SBR PRE-EQUALIZATION BASIN
9. SBR FLOW CONTROL STRUCTURE
10. SEQUENCING BATCH REACTOR
11. AEROBIC DIGESTER
12. SBR POS-EQUALIZATION BASIN
13. SBR/AD BLOWERS
14. ELECTRIC / CONTROLS
15. UV DISINFECTION
16. NON-POTABLE WATER
17. AD DIGESTED SLUDGE PUMPS
18. BELT FILTER PRESS
19. ADMINISTRATIONS BUILDING
20. SLUDGE LOADING
21. POLYMER FEED SYSTEM
22. NON-POTABLE BOOSTER PUMPS (BFP)
23. EFFLUENT PARSHALL FLUME
24. EFFLUENT LIFT STATION
25. FLOW METER STRUCTURE (ELS)
26. WET WEATHER FLOW EQUALIZATION BASIN
27. FEB RETURN LIFT STATION
28. FLOW METER STRUCTURE (FEBLS)
29. GENERATOR (15KW)
30. GENERATOR (1,750KW)
31. MAG METER VAULT

NOTE:
1. STRIPING SHOWN IS FOR REFERENCE ONLY. CONTRACTOR TO PROVIDE THERMOPLASTIC PARKING STRIPE PER MUTCD, 2-HANDICAP, 8 STANDARD. SUBMITTAL REQUIRED.
2. PROVIDE CONCRETE PARKING BUMPER AT ALL PARKING SPACES.

LEGEND

- STRUCTURE
- CONCRETE PAVING (11,069 S.Y.)
- CONCRETE BOLLARD (107 TYP.)

MATCH LINE THIS SHEET

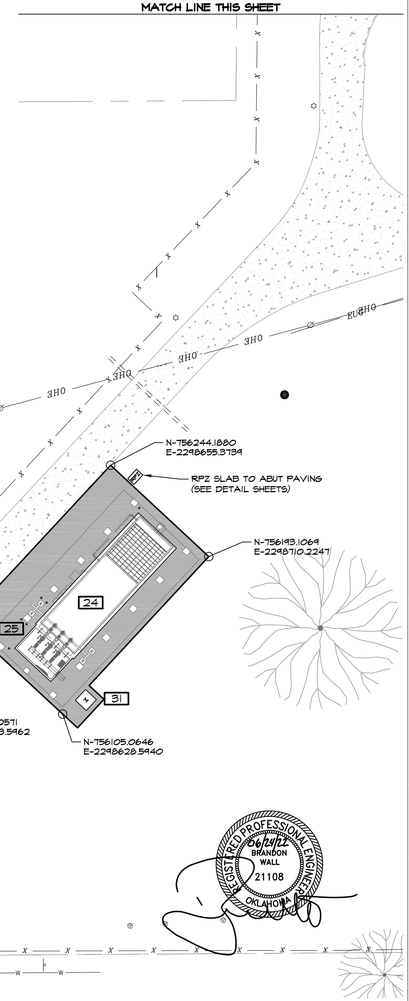

WALL ENGINEERING
223 N. WASHINGTON AVE., DURANT, OK 74701
OKLAHOMA CA #5413 EXP. JUNE 30, 2023

SUBMITTAL / REVISIONS:

DATE	BY	SUBMITTAL / REVISION
03/22	JR	ODEQ SUBMITTAL
06/22	JR	ISSUED FOR BIDDING

SHAWNEE MUNICIPAL AUTHORITY
WASTEWATER SYSTEM IMPROVEMENTS
CONTRACT DOCUMENTS VOL. 4 OF 6 - NORTHSIDE WWTP

PAVING PLAN

PROJECT NO.	SHN-20-01
DATE	06/22
DRAWN BY:	JR
CHECKED BY:	BW
REVIEWED BY:	DBW
SCALE:	1"=40'

BAR IS ONE INCH ON ORIGINAL DRAWING
0" 1"
IF NOT ONE INCH ON THIS SHEET, ADJUST SCALES ACCORDINGLY

REGISTERED PROFESSIONAL ENGINEER
06/21/22
BRANDON WALL
21108
OKLAHOMA

SHEET
C-9

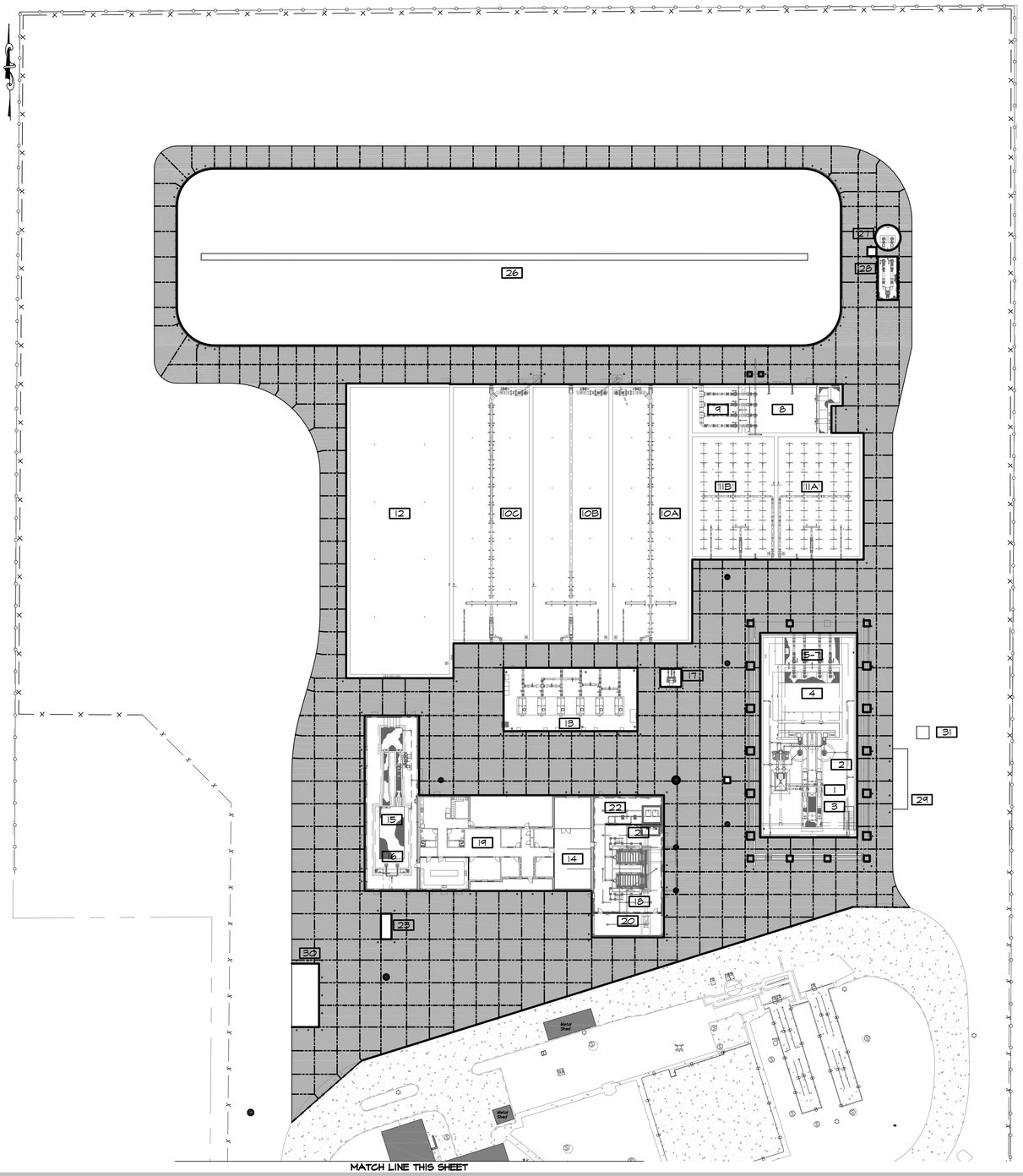

PROPOSED UNIT LEGEND

1. HEADWORKS FINE SCREEN
2. HEADWORKS GRIT CHAMBERS
3. HEADWORKS MANUAL BAR SCREEN
4. INFLUENT LIFT STATION
5. FLOW METER STRUCTURE (ILS-STORM)
6. FLOW METER STRUCTURE (ILS-SBR)
7. FLOW METER STRUCTURE (SS FM)
8. SBR PRE-EQUALIZATION BASIN
9. SBR FLOW CONTROL STRUCTURE
10. SEQUENCING BATCH REACTOR
11. AEROBIC DIGESTER
12. SBR POS-EQUALIZATION BASIN
13. SBR/AD BLOWERS
14. ELECTRIC / CONTROLS
15. UV DISINFECTION
16. NON-POTABLE WATER
17. AD DIGESTED SLUDGE PUMPS
18. BELT FILTER PRESS
19. ADMINISTRATIONS BUILDING
20. SLUDGE LOADING
21. POLYMER FEED SYSTEM
22. NON-POTABLE BOOSTER PUMPS (BFP)
23. EFFLUENT PARSHALL FLUME
24. EFFLUENT LIFT STATION
25. FLOW METER STRUCTURE (ELS)
26. WET WEATHER FLOW EQUALIZATION BASIN
27. FEB RETURN LIFT STATION
28. FLOW METER STRUCTURE (FEBLS)
29. GENERATOR (15KW)

LEGEND

- STRUCTURE
- CONCRETE PAVING
- CONCRETE BOLLARD (TOT TYP.)
- DOWELED EXPANSION JOINT
- NON-DOWELED EXPANSION JOINT
- CONTROL JOINTS
- SAW CUT

MATCH LINE THIS SHEET

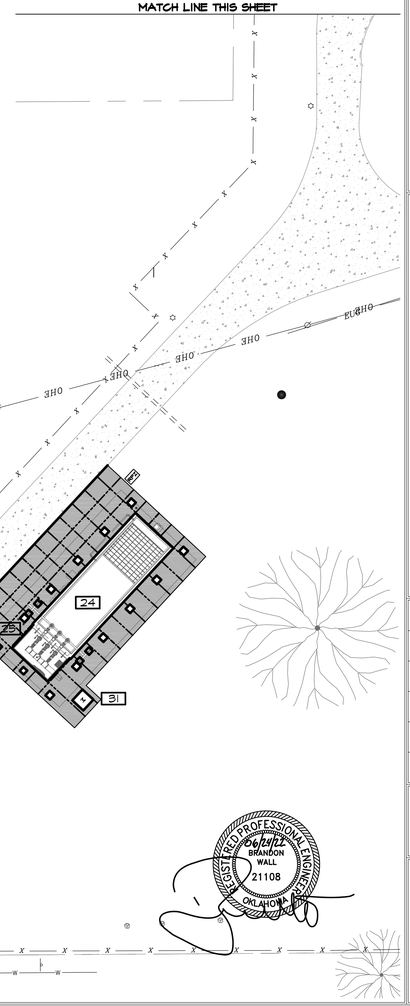

WALL ENGINEERING
223 N. WASHINGTON AVE., DURANT, OK 74701
OKLAHOMA CA #5413 EXP. JUNE 30, 2023

SUBMITTAL / REVISIONS:

DATE	BY	SUBMITTAL / REVISION
03/22	JR	OPEG SUBMITTAL

SHAWNEE MUNICIPAL AUTHORITY
WASTEWATER SYSTEM IMPROVEMENTS
CONTRACT DOCUMENTS VOL. 4 OF 6 - NORTHSIDE WWTP

JOINTING PLAN

PROJECT NO.	SHN-20-01
DATE	06/22
DRAWN BY:	JR
CHECKED BY:	BW
REVIEWED BY:	DBW
SCALE:	1"=40'

BAR IS ONE INCH ON ORIGINAL DRAWING
0" 1"
IF NOT ONE INCH ON THIS SHEET, ADJUST SCALES ACCORDINGLY

REGISTERED PROFESSIONAL ENGINEER
06/21/22
BRANDON WALL
21108
OKLAHOMA

SHEET
C-10

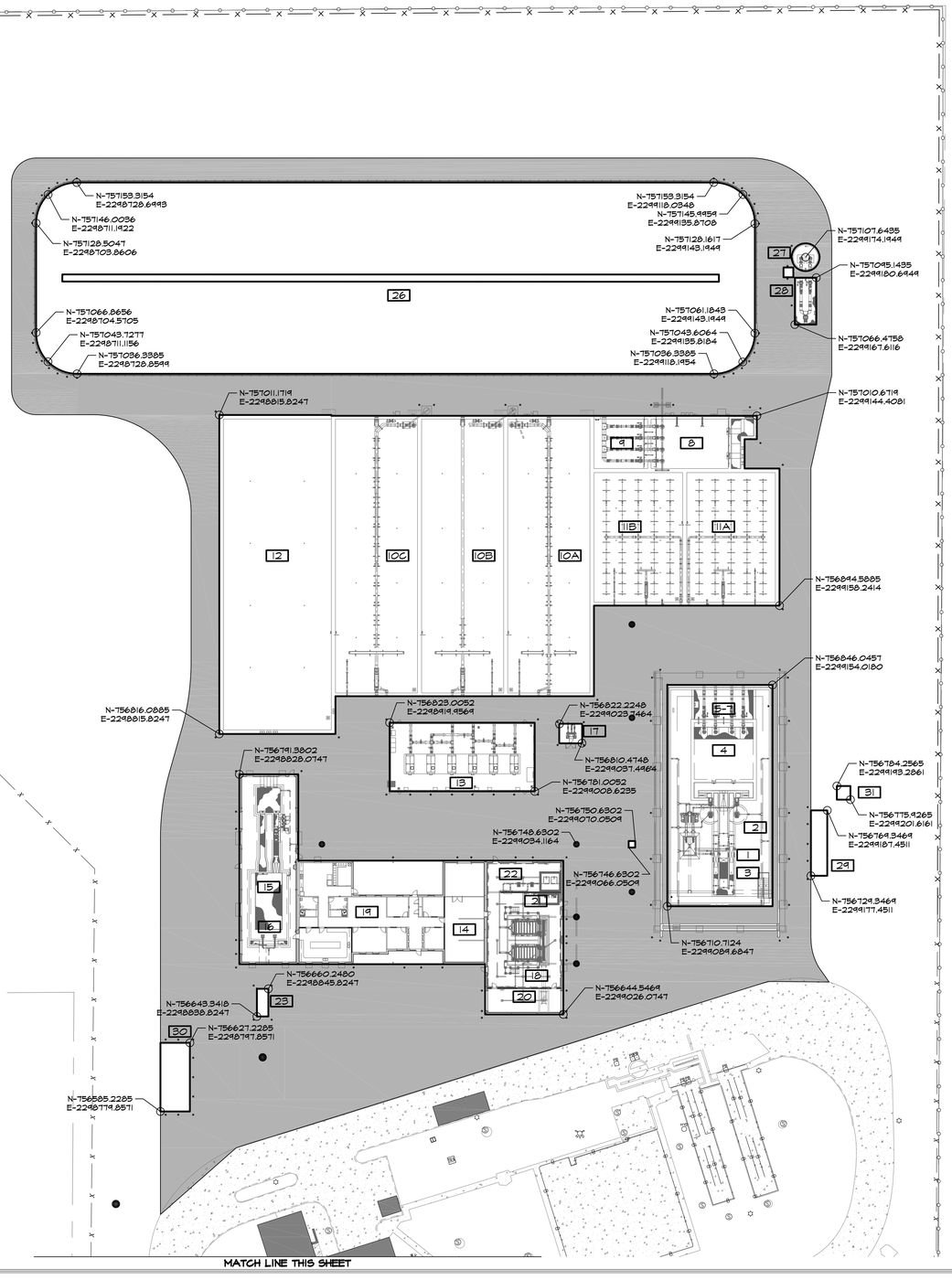

PROPOSED UNIT LEGEND

1. HEADWORKS FINE SCREEN
2. HEADWORKS GRIT CHAMBERS
3. HEADWORKS MANUAL BAR SCREEN
4. INFLUENT LIFT STATION
5. FLOW METER STRUCTURE (ILS-STORM)
6. FLOW METER STRUCTURE (ILS-SBR)
7. FLOW METER STRUCTURE (SS FM)
8. SBR PRE-EQUALIZATION BASIN
9. SBR FLOW CONTROL STRUCTURE
10. SEQUENCING BATCH REACTOR
11. AEROBIC DIGESTER
12. SBR POS-EQUALIZATION BASIN
13. SBR/AD BLOWERS
14. ELECTRIC / CONTROLS
15. UV DISINFECTION
16. NON-POTABLE WATER
17. AD DIGESTED SLUDGE PUMPS
18. BELT FILTER PRESS
19. ADMINISTRATIONS BUILDING
20. SLUDGE LOADING
21. POLYMER FEED SYSTEM
22. NON-POTABLE BOOSTER PUMPS (BFP)
23. EFFLUENT PARSHALL FLUME
24. EFFLUENT LIFT STATION
25. FLOW METER STRUCTURE (ELS)
26. WET WEATHER FLOW EQUALIZATION BASIN
27. FEB RETURN LIFT STATION
28. FLOW METER STRUCTURE (FEBLS)
29. GENERATOR (15KW)

LEGEND

- EXISTING ASPHALT
- EXISTING GRAVEL
- STRUCTURE
- CONCRETE PAVING
- SECURITY FENCE
- EXISTING SECURITY FENCE
- EXISTING BARBWIRE FENCE

MATCH LINE THIS SHEET

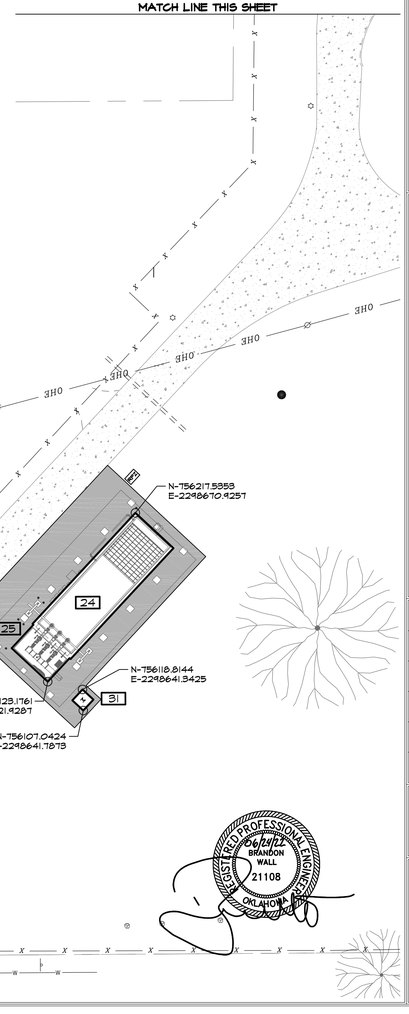

WALL ENGINEERING
223 N. WASHINGTON AVE., DURANT, OK 74701
OKLAHOMA CA #5413 EXP. JUNE 30, 2023

SUBMITTAL / REVISIONS:

DATE	BY	SUBMITTAL / REVISION
03/22	JR	OPSG SUBMITTAL

SHAWNEE MUNICIPAL AUTHORITY
WASTEWATER SYSTEM IMPROVEMENTS
CONTRACT DOCUMENTS VOL. 4 OF 6 - NORTHSIDE WWTP

COORDINATE PLAN

PROJECT NO.	SHN-20-01
DATE	06/22
DRAWN BY:	JR
CHECKED BY:	BW
REVIEWED BY:	DBW
SCALE:	1"=40'

BAR IS ONE INCH ON ORIGINAL DRAWING
0" 1"
IF NOT ONE INCH ON THIS SHEET, ADJUST SCALES ACCORDINGLY

REGISTERED PROFESSIONAL ENGINEER
06/21/22
BRANDON WALL
21108
OKLAHOMA

SHEET
C-11

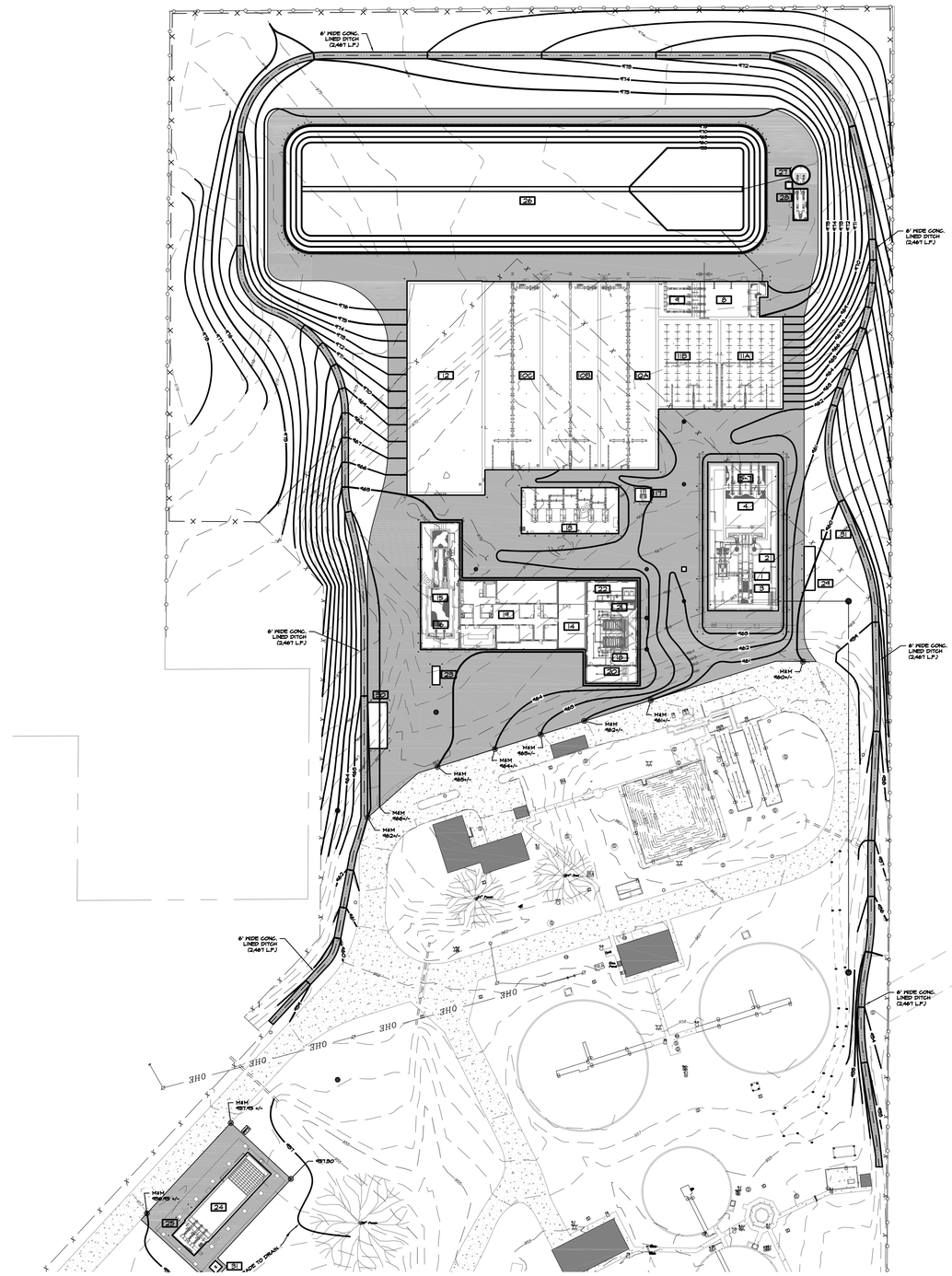

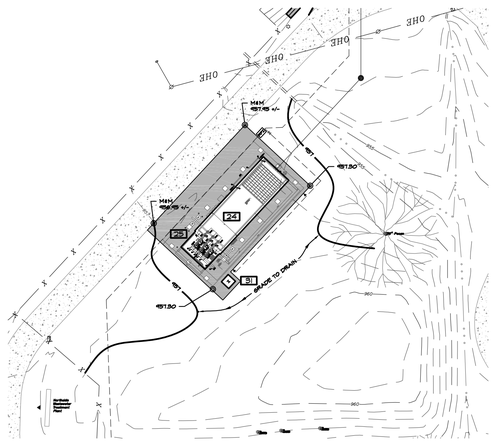

PROPOSED UNIT LEGEND

1	HEADWORKS FINE SCREEN
2	HEADWORKS GRIT CHAMBERS
3	HEADWORKS MANUAL BAR SCREEN
4	INFLUENT LIFT STATION
5	FLOW METER STRUCTURE (ILS-STORM)
6	FLOW METER STRUCTURE (ILS-SBR)
7	FLOW METER STRUCTURE (SS FM)
8	SBR PRE-EQUALIZATION BASIN
9	SBR FLOW CONTROL STRUCTURE
10	SEQUENCING BATCH REACTOR
11	AEROBIC DIGESTER
12	SBR POS-EQUALIZATION BASIN
13	SBR/AD BLOWERS
14	ELECTRIC / CONTROLS
15	UV DISINFECTION
16	NON-POTABLE WATER
17	AD DIGESTED SLUDGE PUMPS
18	BELT FILTER PRESS
19	ADMINISTRATIONS BUILDING
20	SLUDGE LOADING
21	POLYMER FEED SYSTEM
22	NON-POTABLE BOOSTER PUMPS (BFP)
23	EFFLUENT PARSHALL FLUME
24	EFFLUENT LIFT STATION
25	FLOW METER STRUCTURE (ELS)
26	WET WEATHER FLOW EQUALIZATION BASIN
27	FEB RETURN LIFT STATION
28	FLOW METER STRUCTURE (FEBLS)
29	GENERATOR (15KW)

LEGEND

- EXISTING ASPHALT
- EXISTING GRAVEL
- STRUCTURE
- CONCRETE PAVING
- GRAVEL SURFACE
- SECURITY FENCE
- EXISTING SECURITY FENCE
- EXISTING BARBWIRE FENCE
- XXXX PROPOSED CONTOUR
- XXXX EXISTING CONTOUR
- PROPOSED FLOW LINE
- TC-XXXX.XX TOP OF CONCRETE ELEV.
- FL-XXXX.XX FLOW LINE ELEV.
- M&M MEET & MATCH ELEV.
- HP-XXXX.XXX HIGH POINT ELEV.

WALL ENGINEERING
223 N. WASHINGTON AVE., DURANT, OK 74701
OKLAHOMA CA #5413 EXP. JUNE 30, 2023

SUBMITTAL / REVISIONS:

DATE	BY	SUBMITTAL / REVISION
03/22	JR	ODEQ SUBMITTAL
06/22	JR	ISSUED FOR BIDDING

SHAWNEE MUNICIPAL AUTHORITY
WASTEWATER SYSTEM IMPROVEMENTS
CONTRACT DOCUMENTS VOL. 4 OF 6 - NORTHSIDE WWTP

GRADING PLAN

PROJECT NO.	SHN-20-01
DATE	06/22
DRAWN BY:	JR
CHECKED BY:	BW
REVIEWED BY:	DBW
SCALE:	1"=60'

BAR IS ONE INCH ON ORIGINAL DRAWING
0" 1"
IF NOT ONE INCH ON THIS SHEET, ADJUST SCALES ACCORDINGLY

REGISTERED PROFESSIONAL ENGINEER
06/21/22
BRANDON WALL
21108
OKLAHOMA

SHEET
C-12

PIPING LEGEND

RS	RAW SEWAGE - DI CLASS 350 RJ
PE	PRIMARY EFFLUENT - DI CLASS 250 RJ/HDPE DRII
SE	SECONDARY EFFLUENT - DI CLASS 250 RJ
WS	WASTE SLUDGE - DI CLASS 250 RJ
SW	STORM WATER - DI CLASS 250 RJ
FE	FINAL EFFLUENT - DI CLASS 250 RJ
EF	EFFLUENT FORCE MAIN - HDPE DRII/DI CLASS 250 RJ
NPW	NON-POTABLE WATER - DI CLASS 250 RJ
PW	POTABLE WATER - DI CLASS 250 RJ
SL	SLUDGE - DI CLASS 250 RJ
CA	COMPRESSED AIR - UNLINED DI CLASS 250 RJ
DR	DRAIN LINE - DI CLASS 250 RJ

MANHOLE/BOX LEGEND

NO.	DIA	TR	INFLUENT FL	EFFLUENT FL	NORTHING	EASTING
MH-1	6'	957.27'	929.77'	929.76'	756381.2615	2249217.8822
MH-2	6'	959.90'	929.17'	929.16'	756119.4646	2249217.8822
MH-3	6'	964.71'	946.24'	946.24'	756618.3418	2248842.3247
MH-4	6'	965.50'	945.57'	945.57'	756528.6511	2248752.6341
MH-5	6'	958.65'	944.28'	944.28'	756283.5625	2248752.6341
DB-6	4'x4'	962.40'	VARIES	932.08'	756748.6302	2249068.0509
MH-7	4'	964.31'	950.35'	950.30'	756704.1928	2249034.1164
MH-8	4'	964.26'	950.56'	950.46'	756675.6093	2249034.1164
MH-9	4'	962.05'	931.55'	931.45'	756119.4646	2249068.0509
MH-10	4'	962.85'	952.93'	952.83'	756826.0052	2249068.0509
MH-11	4'	962.61'	953.90'	953.80'	756883.0712	2249068.0531
MH-12	4'	964.63'	951.05'	950.95'	756748.6302	2248878.5484
MH-13	4'	963.65'	950.27'	950.17'	756748.6302	2249034.1164

NOTE:

1. MANHOLE M-3, MH-7, MH-8, MH-9, MH-10, MH-11, SHALL HAVE SLOTTED LIDS TO ALLOW FOR VENTILATION.
2. LINE 14-C TO EXTEND SLIGHTLY INTO MH-8 AND CONTAIN AN 8" FLAP VALVE.
3. DB-6 TO BE PRE-ENGINEERED (S.E.) 4'x4' CONCRETE VAULT W/TRAFFIC RATED GRATED TOP. SEE PROFILE FOR LINE ELEVATIONS. SUBMITTAL REQUIRED.
4. SOME VALVES SHOWN ON OTHER DRAWINGS HAVE BEEN OMITTED FOR CLARITY.

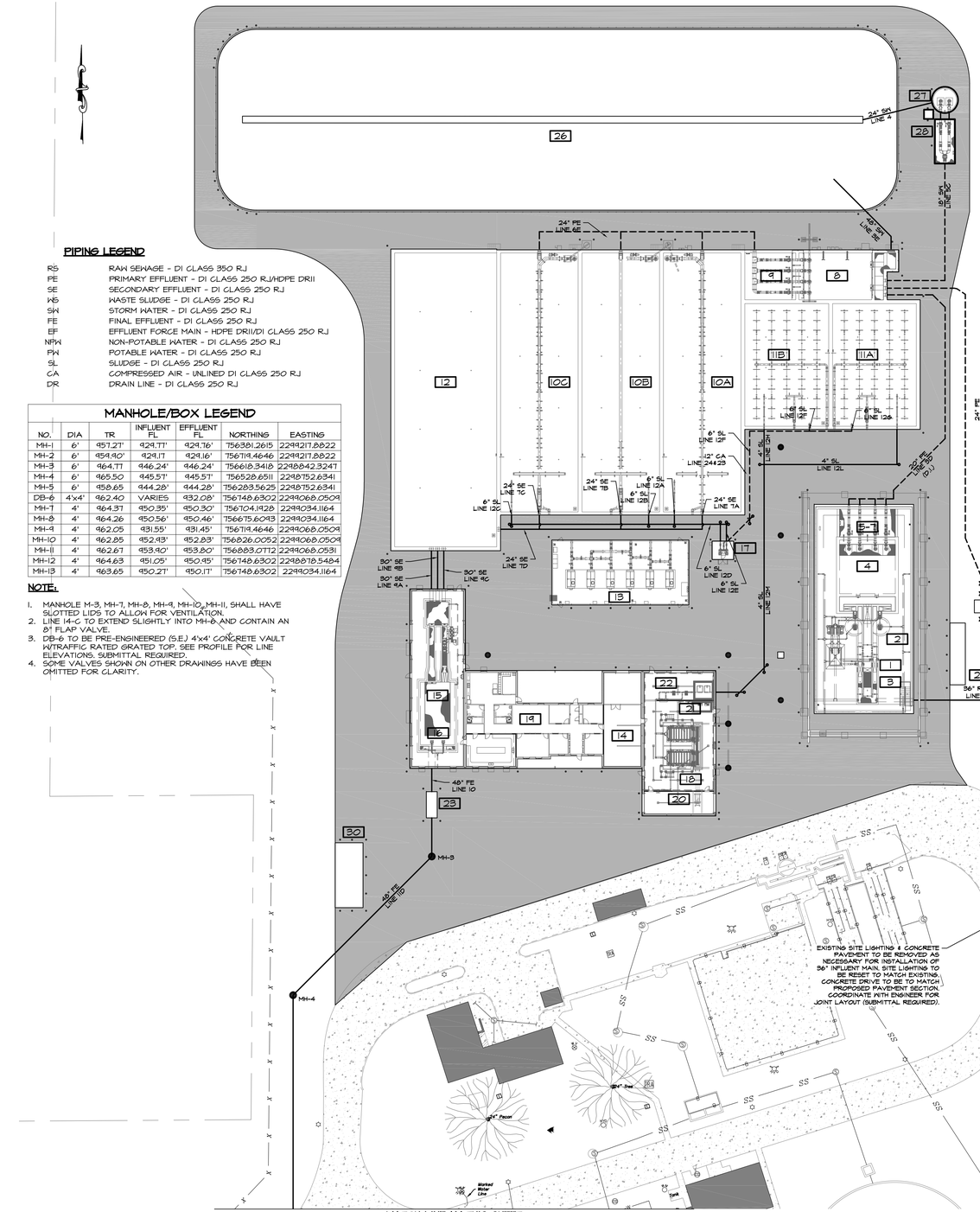

PROPOSED UNIT LEGEND

1	HEADWORKS FINE SCREEN
2	HEADWORKS GRIT CHAMBERS
3	HEADWORKS MANUAL BAR SCREEN
4	INFLUENT LIFT STATION
5	FLOW METER STRUCTURE (ILS-STORM)
6	FLOW METER STRUCTURE (ILS-SBR)
7	FLOW METER STRUCTURE (SS FM)
8	SBR PRE-EQUALIZATION BASIN
9	SBR FLOW CONTROL STRUCTURE
10	SEQUENCING BATCH REACTOR
11	AEROBIC DIGESTER
12	SBR POS-EQUALIZATION BASIN
13	SBR/AD BLOWERS
14	ELECTRIC / CONTROLS
15	UV DISINFECTION
16	NON-POTABLE WATER
17	AD DIGESTED SLUDGE PUMPS
18	BELT FILTER PRESS
19	ADMINISTRATIONS BUILDING
20	SLUDGE LOADING
21	POLYMER FEED SYSTEM
22	NON-POTABLE BOOSTER PUMPS (BPP)
23	EFFLUENT PARSHALL FLUME
24	EFFLUENT LIFT STATION
25	FLOW METER STRUCTURE (ELS)
26	WET WEATHER FLOW EQUALIZATION BASIN
27	FEB RETURN LIFT STATION
28	FLOW METER STRUCTURE (FEBLS)
29	GENERATOR (15KW)
30	GENERATOR (1,750KW)
31	MAG METER VAULT

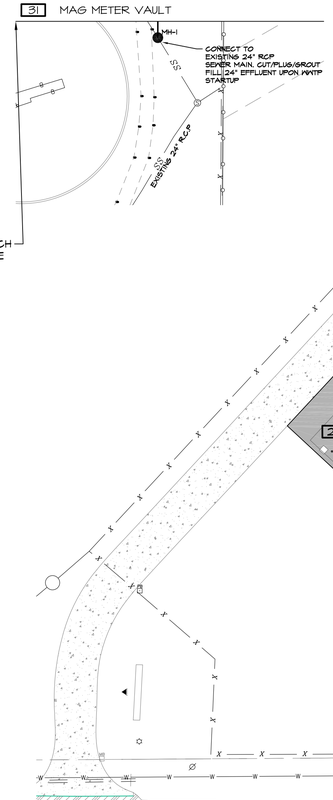

LEGEND

- EXISTING ASPHALT
- EXISTING GRAVEL
- STRUCTURE
- CONCRETE PAVING
- SECURITY FENCE
- EXISTING SECURITY FENCE
- EXISTING BARBWIRE FENCE
- PRESSURE PIPE
- AIR PIPE
- GRAVITY PIPE
- MAG-METER IN VAULT
- CONCRETE MANHOLE
- CONCRETE JUNCTION BOX
- CLEAN OUT
- PIPE BOLLARD
- VALVE

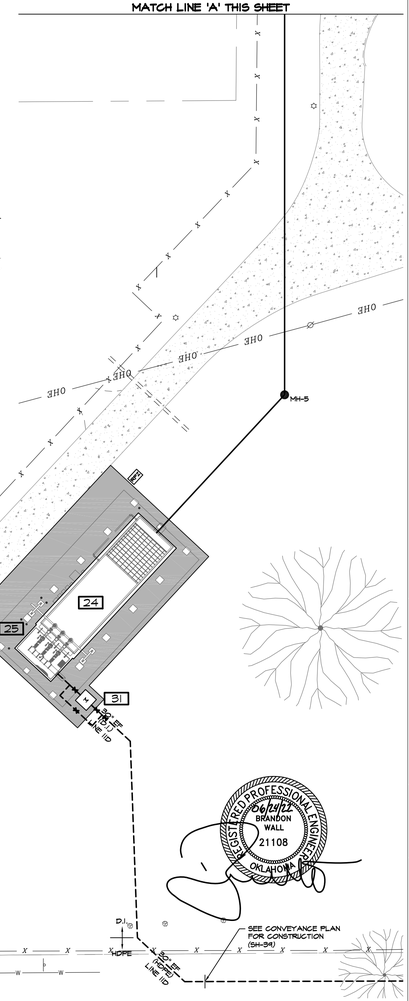

WALL ENGINEERING
223 N. WASHINGTON AVE. DURANT, OK 74701
OKLAHOMA CA #5413 EXP. JUNE 30, 2023

SUBMITTAL / REVISIONS:

DATE	BY	SUBMITTAL / REVISION
03/22	JR	ODEQ SUBMITTAL
06/22	JR	ISSUED FOR BIDDING

SHAWNEE MUNICIPAL AUTHORITY
WASTEWATER SYSTEM IMPROVEMENTS
CONTRACT DOCUMENTS VOL. 4 OF 6 - NORTHSIDE WWTP

PRIMARY PIPING PLAN

PROJECT NO.	SHN-20-01
DATE	06/22
DRAWN BY:	JR
CHECKED BY:	BW
REVIEWED BY:	DBW
SCALE:	1"=40'

BAR IS ONE INCH ON ORIGINAL DRAWING
0" 1"
IF NOT ONE INCH ON THIS SHEET, ADJUST SCALES ACCORDINGLY

REGISTERED PROFESSIONAL ENGINEER
06/21/22
BRANDON WALL
21108
OKLAHOMA

SHEET

C-13

MANHOLE/BOX LEGEND

NO.	DIA	TR	INFLUENT FL	EFFLUENT FL	NORTHING	EASTING
MH-1	6'	957.27'	424.71'	424.76'	756381.2615	2249217.8822
MH-2	6'	959.90'	424.17	424.16'	756119.4646	2249217.8822
MH-3	6'	964.77	446.24'	446.24'	756618.3418	2248842.3247
MH-4	6'	965.50	445.57'	445.57'	756528.6511	2248752.6341
MH-5	6'	958.65	444.28'	444.28'	756283.5625	2248752.6341
DB-6	4'x4'	962.40	VARIES	932.08'	756748.6302	2249068.0509
MH-7	4'	964.31	450.35'	950.30'	756704.1928	2249034.1164
MH-8	4'	964.26	450.56'	950.46'	756675.6043	2249034.1164
MH-9	4'	962.05	431.55'	431.45'	756719.4646	2249068.0509
MH-10	4'	962.85	452.93'	452.83'	756826.0052	2249068.0509
MH-11	4'	962.67	453.90'	453.80'	756883.0772	2249068.0531
MH-12	4'	964.63	451.05'	450.95'	756748.6302	2248818.5484
MH-13	4'	963.65	450.27'	450.17'	756748.6302	2249034.1164

NOTE:

1. MANHOLE M-3, MH-7, MH-8, MH-9, MH-10, MH-11, SHALL HAVE SLOTTED LIDS TO ALLOW FOR VENTILATION.
2. LINE 14-C TO EXTEND SLIGHTLY INTO MH-6 AND CONTAIN AN 8" FLAP VALVE.
3. DB-6 TO BE PRE-ENGINEERED (S.E.) 4'x4' CONCRETE VAULT W/TRAFFIC RATED GRATED TOP. SEE PROFILE FOR LINE ELEVATIONS. SUBMITTAL REQUIRED.
4. SOME VALVES SHOWN ON OTHER DRAWINGS HAVE BEEN OMITTED FOR CLARITY.

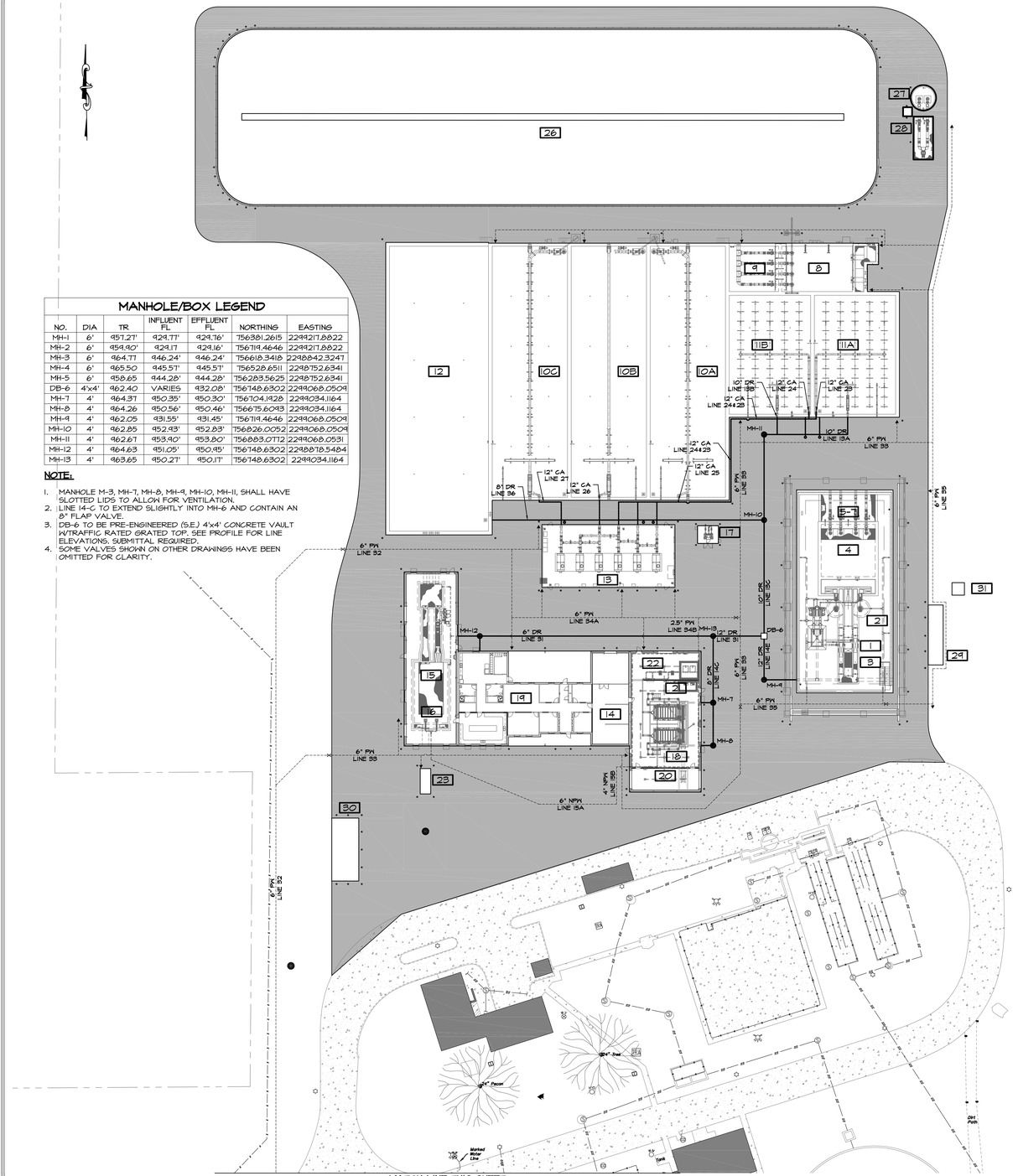

MATCH LINE THIS SHEET

PROPOSED UNIT LEGEND

1. HEADWORKS FINE SCREEN
2. HEADWORKS GRIT CHAMBERS
3. HEADWORKS MANUAL BAR SCREEN
4. INFLUENT LIFT STATION
5. FLOW METER STRUCTURE (ILS-STORM)
6. FLOW METER STRUCTURE (ILS-SBR)
7. FLOW METER STRUCTURE (SS FM)
8. SBR PRE-EQUALIZATION BASIN
9. SBR FLOW CONTROL STRUCTURE
10. SEQUENCING BATCH REACTOR
11. AEROBIC DIGESTER
12. SBR POS-EQUALIZATION BASIN
13. SBR/AD BLOWERS
14. ELECTRIC / CONTROLS
15. UV DISINFECTION
16. NON-POTABLE WATER
17. AD DIGESTED SLUDGE PUMPS
18. BELT FILTER PRESS
19. ADMINISTRATIONS BUILDING
20. SLUDGE LOADING
21. POLYMER FEED SYSTEM
22. NON-POTABLE BOOSTER PUMPS (BFP)
23. EFFLUENT PARSHALL FLUME
24. EFFLUENT LIFT STATION
25. FLOW METER STRUCTURE (ELS)
26. WET WEATHER FLOW EQUALIZATION BASIN
27. FEB RETURN LIFT STATION
28. FLOW METER STRUCTURE (FEBLS)
29. GENERATOR (15KW)
30. GENERATOR (1,750KW)
31. MAG METER VAULT

PIPING LEGEND

RS	RAW SEWAGE - DI CLASS 350 RJ
PE	PRIMARY EFFLUENT - DI CLASS 250 RJ/HDPE DRII
SE	SECONDARY EFFLUENT - DI CLASS 250 RJ
WS	WASTE SLUDGE - DI CLASS 250 RJ
SW	STORM WATER - DI CLASS 250 RJ
FE	FINAL EFFLUENT - DI CLASS 250 RJ
EF	EFFLUENT FORCE MAIN - HDPE DRII/DI CLASS 250 RJ
NPW	NON-POTABLE WATER - DI CLASS 250 RJ
PW	POTABLE WATER - DI CLASS 250 RJ
SL	SLUDGE - DI CLASS 250 RJ
CA	COMPRESSED AIR - UNLINED DI CLASS 250 RJ
DR	DRAIN LINE - DI CLASS 250 RJ

LEGEND

- EXISTING ASPHALT
- EXISTING GRAVEL
- STRUCTURE
- CONCRETE PAVING
- SECURITY FENCE
- EXISTING SECURITY FENCE
- EXISTING BARBWIRE FENCE
- PRESSURE PIPE
- AIR PIPE
- GRAVITY PIPE
- MAG-METER IN VAULT
- CONCRETE MANHOLE
- CONCRETE JUNCTION BOX
- CLEAN OUT
- YARD HYDRANT
- BACKFLOW PREVENTER
- 6" GATE VALVE

MATCH LINE THIS SHEET

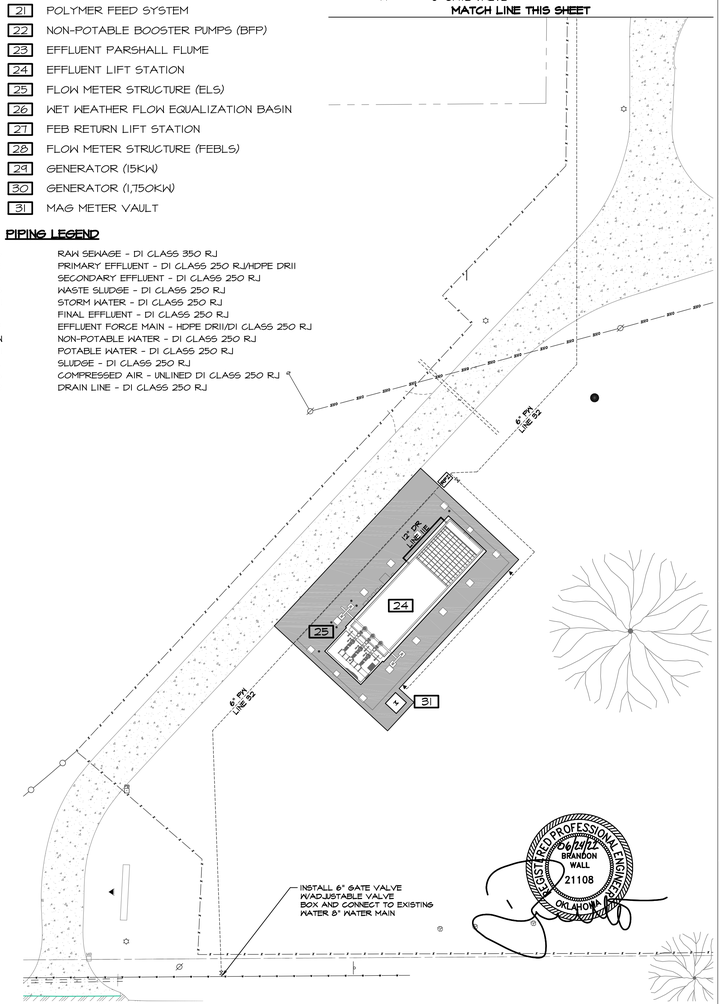

WALL ENGINEERING
223 N. WASHINGTON AVE., DURANT, OK 74701
OKLAHOMA CA #5413 EXP. JUNE 30, 2023

SUBMITTAL / REVISIONS:

DATE	BY	SUBMITTAL / REVISION
03/22	JR	ODEQ SUBMITTAL
06/22	JR	ISSUED FOR BIDDING

SHAWNEE MUNICIPAL AUTHORITY
WASTEWATER SYSTEM IMPROVEMENTS
CONTRACT DOCUMENTS VOL. 4 OF 6 - NORTHSIDE WWTP

SECONDARY PIPING PLAN

PROJECT NO.	SHN-20-01
DATE	06/22
DRAWN BY:	JR
CHECKED BY:	BW
REVIEWED BY:	DBW
SCALE:	1"=40'

BAR IS ONE INCH ON ORIGINAL DRAWING
0" 1"
IF NOT ONE INCH ON THIS SHEET, ADJUST SCALES ACCORDINGLY

REGISTERED PROFESSIONAL ENGINEER
06/14/22
BRANDON WALL
21108
OKLAHOMA

SHEET

C-14A

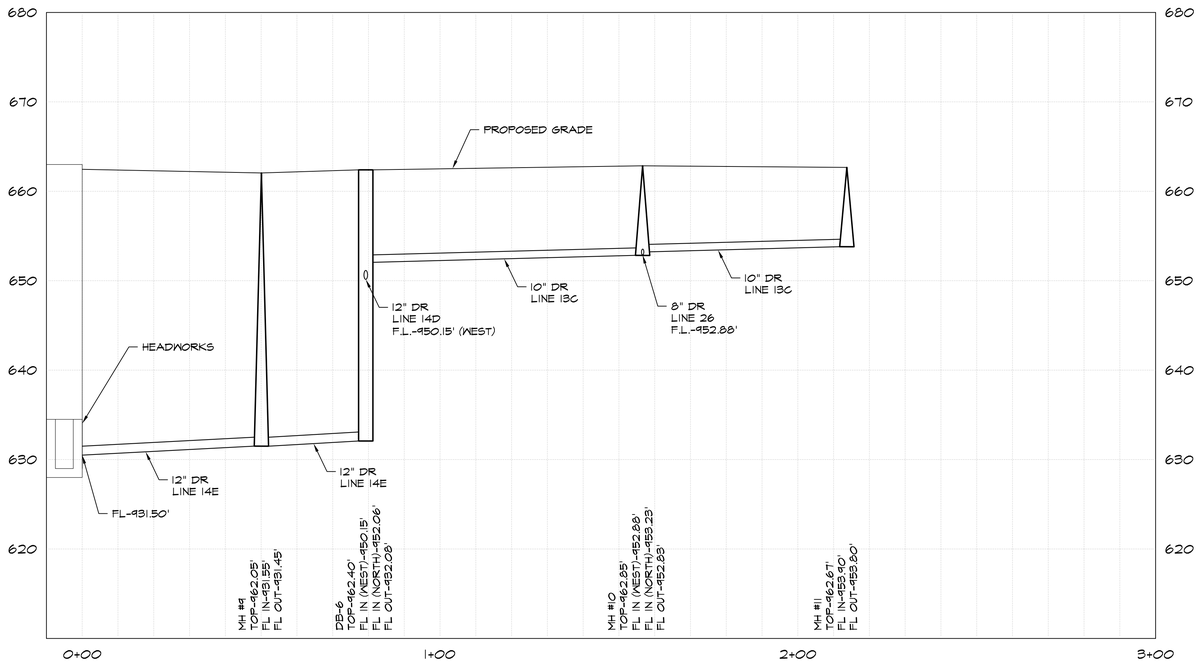

PROFILE LINE 13C / LINE 14E

SCALE: 1"=20'

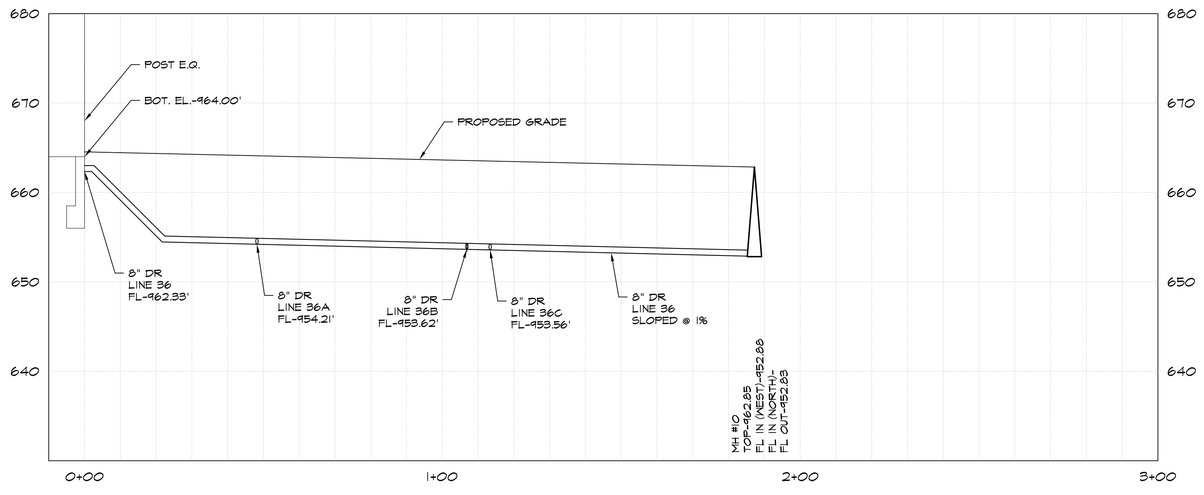

PROFILE LINE 31 / LINE 14D

SCALE: 1"=20'



WALL ENGINEERING
223 N. WASHINGTON AVE., DURANT, OK 74701
OKLAHOMA CA #5413 EXP. JUNE 30, 2023

SUBMITTAL / REVISIONS:

DATE	BY	SUBMITTAL / REVISION
03/22	JR	ODEQ SUBMITTAL
06/22	JR	ISSUED FOR BIDDING

SHAWNEE MUNICIPAL AUTHORITY
WASTEWATER SYSTEM IMPROVEMENTS
CONTRACT DOCUMENTS VOL. 4 OF 6 - NORTHSIDE WWTP

SECONDARY PIPING PROFILES

PROJECT NO.	SHN-20-01
DATE	06/22
DRAWN BY:	JR
CHECKED BY:	BW
REVIEWED BY:	DBW
SCALE:	1"=40'

BAR IS ONE INCH ON ORIGINAL DRAWING
0" 1"
IF NOT ONE INCH ON THIS SHEET, ADJUST SCALES ACCORDINGLY

SHEET

C-14B

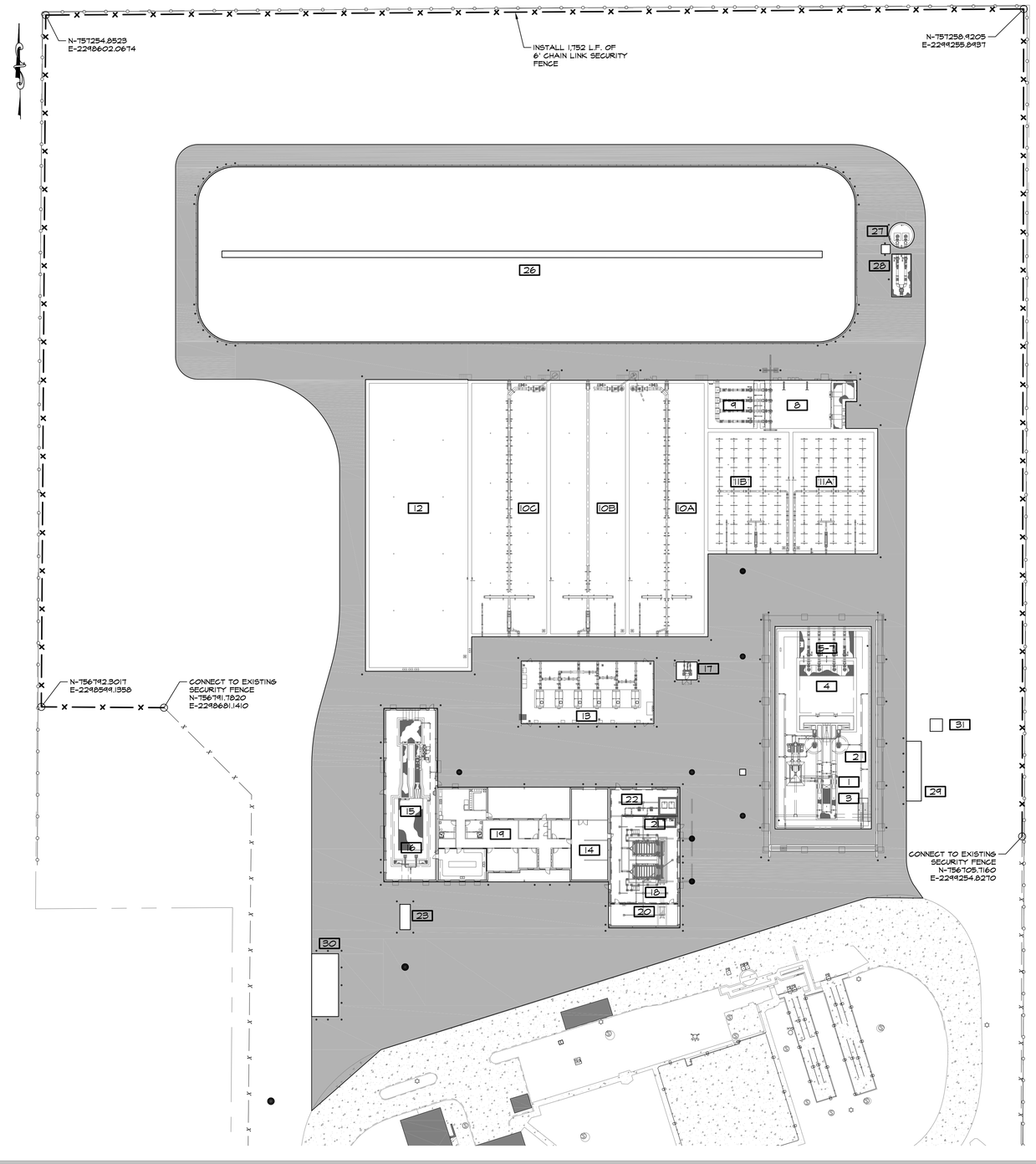

PROPOSED UNIT LEGEND

1. HEADWORKS FINE SCREEN
2. HEADWORKS GRIT CHAMBERS
3. HEADWORKS MANUAL BAR SCREEN
4. INFLUENT LIFT STATION
5. FLOW METER STRUCTURE (ILS-STORM)
6. FLOW METER STRUCTURE (ILS-SBR)
7. FLOW METER STRUCTURE (SS FM)
8. SBR PRE-EQUALIZATION BASIN
9. SBR FLOW CONTROL STRUCTURE
10. SEQUENCING BATCH REACTOR
11. AEROBIC DIGESTER
12. SBR POS-EQUALIZATION BASIN
13. SBR/AD BLOWERS
14. ELECTRIC / CONTROLS
15. UV DISINFECTION
16. NON-POTABLE WATER
17. AD DIGESTED SLUDGE PUMPS
18. BELT FILTER PRESS
19. ADMINISTRATIONS BUILDING
20. SLUDGE LOADING
21. POLYMER FEED SYSTEM
22. NON-POTABLE BOOSTER PUMPS (BFP)
23. EFFLUENT PARSHALL FLUME
24. EFFLUENT LIFT STATION
25. FLOW METER STRUCTURE (ELS)
26. WET WEATHER FLOW EQUALIZATION BASIN
27. FEB RETURN LIFT STATION
28. FLOW METER STRUCTURE (FEBLS)
29. GENERATOR (15KW)
30. GENERATOR (1,750KW)
31. MAG METER VAULT

LEGEND

- EXISTING ASPHALT
- EXISTING GRAVEL
- STRUCTURE
- CONCRETE PAVING
- SECURITY FENCE
- EXISTING SECURITY FENCE
- EXISTING BARBWIRE FENCE

REGISTERED PROFESSIONAL ENGINEER
06/21/22
BRANDON WALL
21108
OKLAHOMA

WALL ENGINEERING
223 N. WASHINGTON AVE., DURANT, OK 74701
OKLAHOMA CA #5413 EXP. JUNE 30, 2023

SUBMITTAL / REVISIONS:

DATE	BY	SUBMITTAL / REVISION
03/22	JR	ODEQ SUBMITTAL
06/22	JR	ISSUED FOR BIDDING

SHAWNEE MUNICIPAL AUTHORITY
WASTEWATER SYSTEM IMPROVEMENTS
CONTRACT DOCUMENTS VOL. 4 OF 6 - NORTHSIDE WWTP

FENCING PLAN

PROJECT NO.	SHN-20-01
DATE	06/22
DRAWN BY:	JR
CHECKED BY:	BW
REVIEWED BY:	DBW
SCALE:	1"=40'

BAR IS ONE INCH ON ORIGINAL DRAWING
0" 1"
IF NOT ONE INCH ON THIS SHEET, ADJUST SCALES ACCORDINGLY

SHEET
C-15

HEADWORKS CANOPY/BRIDGE CRANE NOTES:

1. SEE STRUCTURAL FOR HEADWORKS BUILDING DETAILS.
2. STRUCTURAL SHEETS ALSO CONTAIN SUPPORT STRUCTURE DETAILS FOR TRAVELING BRIDGE CRANE. COORDINATE WITH MANUFACTURER FOR ADDITIONAL REQUIREMENTS FOR CRANE AND/OR SPECIFICATIONS SECTION.
3. STRUCTURAL INFORMATION FOR CRANE SUPPORT REPRESENTS A TYPICAL SUPPORT SYSTEM. ACTUAL SUPPORT SYSTEMS MAY VARY WITH MANUFACTURER/SUPPLIER.
4. CONTRACTOR TO COORDINATE LOCATION OF ELECTRICAL POWER SUPPLY TO CRANE WITH CRANE MANUFACTURER.
5. CRANE SUBMITTAL TO BE STAMPED BY AN OKLAHOMA STRUCTURAL ENGINEER.
6. FIELD LOCATE ALL ELECTRICAL EQUIPMENT SHOWN ON ELECTRICAL DRAWINGS BETWEEN CANOPY SUPPORTS.

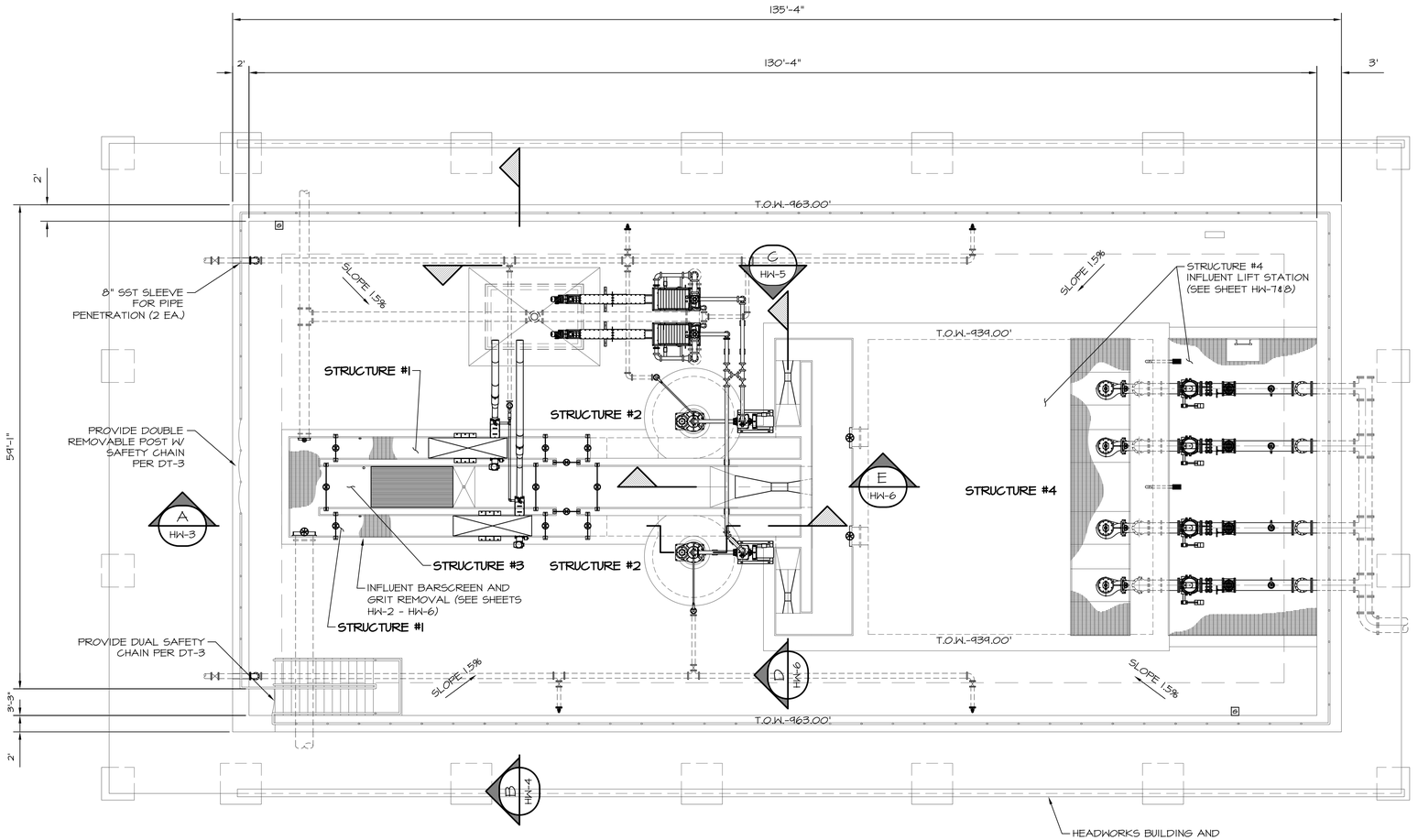

WALL ENGINEERING
223 N. WASHINGTON AVE. DURANT, OK 74701
OKLAHOMA CA #5413 EXP. JUNE 30, 2023

SUBMITTAL / REVISIONS:

DATE	BY	SUBMITTAL / REVISION
03/22	JR	ODEQ SUBMITTAL
06/22	JR	ISSUED FOR BIDDING

SHAWNEE MUNICIPAL AUTHORITY
WASTEWATER SYSTEM IMPROVEMENTS
CONTRACT DOCUMENTS VOL. 4 OF 6 - NORTHSIDE WWTP

INFLUENT BARSCREEN, GRIT REMOVAL AND INFLUENT LIFT STATION
OVERALL MECHANICAL PLAN

PROJECT NO.	SHN-20-01
DATE	06/22
DRAWN BY:	JR
CHECKED BY:	BW
REVIEWED BY:	DBW
SCALE:	1/8"=1'-0"

BAR IS ONE INCH ON ORIGINAL DRAWING
0" 1"
IF NOT ONE INCH ON THIS SHEET, ADJUST SCALES ACCORDINGLY

REGISTERED PROFESSIONAL ENGINEER
06/14/22
BRANDON WALL
21108
OKLAHOMA

SHEET
HW-1

316L SS GATE SCHEDULE STRUCTURE #1					
GATE IDENTIFICATION	ISL01	ISL02	IS601	IS602	IS603
GATE TYPE	SLUICE	SLUICE	CHANNEL	CHANNEL	CHANNEL
GATE SIZE	36" ø	12" ø	30"x78"	30"x78"	30"x78"
GATE SERIES	924	924	921	921	921
MOUNTING - FRAME	CW	CW	FE	FE	FE
MOUNTING - INVERT			EMBEDDED	EMBEDDED	EMBEDDED
HOIST REQUIREMENT					
A. MANUAL	HC	HC	HC	HC	HC
B. ELECTRIC	YES	YES	YES	NO	NO
C. STEM COVER	GS	GS	GS	GS	GS
D. POSITION COVER	MYLAR	MYLAR	MYLAR	MYLAR	MYLAR
E. STEM CONFIGURATION	RISING	RISING	RISING	RISING	RISING
LIFT MOUNTING	YOKE	YOKE	YOKE	YOKE	YOKE
LEAKAGE STANDARD	AWWA	AWWA	AWWA	AWWA	AWWA
OPERATING FLOOR ELEV.	934.00'	934.00'	934.00'	934.00'	934.00'
INVERT ELEV.	929.00'	929.00'	929.00'	929.00'	929.00'

316L SS GATE SCHEDULE STRUCTURE #1					
GATE IDENTIFICATION	IS604	IS605	IS606	IS607	IS608
GATE TYPE	CHANNEL	CHANNEL	CHANNEL	CHANNEL	CHANNEL
GATE SIZE	30"x78"	30"x78"	30"x78"	30"x78"	30"x78"
GATE SERIES	921	921	921	921	921
MOUNTING - FRAME	FE	FE	FE	FE	FE
MOUNTING - INVERT	EMBEDDED	EMBEDDED	EMBEDDED	EMBEDDED	EMBEDDED
HOIST REQUIREMENT					
A. MANUAL	HC	HC	HC	HC	HC
B. ELECTRIC	NO	YES	NO	NO	NO
C. STEM COVER	GS	GS	GS	GS	GS
D. POSITION COVER	MYLAR	MYLAR	MYLAR	MYLAR	MYLAR
E. STEM CONFIGURATION	RISING	RISING	RISING	RISING	RISING
LIFT MOUNTING	YOKE	YOKE	YOKE	YOKE	YOKE
LEAKAGE STANDARD	AWWA	AWWA	AWWA	AWWA	AWWA
OPERATING FLOOR ELEV.	934.00'	934.00'	934.00'	934.00'	934.00'
INVERT ELEV.	929.00'	930.50'	929.00'	929.00'	929.00'

316L SS GATE SCHEDULE STRUCTURE #3			
GATE IDENTIFICATION	3SG01	3SG02	3SG03
GATE TYPE	CHANNEL	CHANNEL	CHANNEL
GATE SIZE	60"x60"	60"x60"	60"x60"
GATE SERIES	924	924	924
MOUNTING - FRAME	FE	FE	FE
MOUNTING - INVERT	EMBEDDED	EMBEDDED	EMBEDDED
HOIST REQUIREMENT			
A. MANUAL	HC	HC	HC
B. ELECTRIC	YES	YES	YES
C. STEM COVER	GS	GS	GS
D. POSITION COVER	MYLAR	MYLAR	MYLAR
E. STEM CONFIGURATION	RISING	RISING	RISING
LIFT MOUNTING	YOKE	YOKE	YOKE
LEAKAGE STANDARD	AWWA	AWWA	AWWA
OPERATING FLOOR ELEV.	934.00'	934.00'	934.00'
INVERT ELEV.	929.00'	929.00'	929.00'

INDEX
FE: EMBEDDED FRAME
HC: HAND CRANK
GS: GALVANIZED STEEL
CW: CHANNEL WALL
SQN: SQUARE NUT

NOTES:
1. ALL ABOVE GROUND PIPING 4" AND SMALLER . PIPING AND FITTINGS SMALLER THAN 4" SHALL BE 316 SST (GROOVED).
2. USE VICTAULIC FITTINGS AS REQUIRED.
3. GATE WIDTHS LISTED ARE NOMINAL.
4. CONTRACTOR SHALL ADJUST LOCATION OF GRIT WASHER CONVEYER TO ALLOW FOR USE OF ONE DUMPSTER.
5. THERE SHALL NOT BE ANY GRATING OVER GATES WHICH WOULD INTERFERE WITH OPERATION.
6. ALL EXPOSED PIPING SHALL BE FREEZE PROTECTED BY HEAT TRACE AND INSULATED.
7. GRIT PUMPS SHALL BE EQUIPPED WITH CASE HEATING AND FREEZE PROTECTION PER MANUFACTURERS RECOMMENDATIONS.
8. PW WATER CONNECTION TO EQUIPMENT SHALL BE INSTALLED WITH CONNECTION SOLENOID VALVE SUPPLIED BY MANUFACTURER. FIELD ROUTE ELECTRICAL/CONTROLS PER MANUFACTURERS RECOMMENDATIONS.
9. CONTRACTOR SHALL VERIFY WITH OWNER DUMPSTER DIMENSIONING PRIOR TO PLACEMENT OF CLASSIFIER/COMPACTOR DISCHARGE OUTLETS.
10. ALL PIPING AND CONNECTIONS SHALL BE PER MANUFACTURERS RECOMMENDATIONS.
11. ALL ELECTRONICALLY ACTUATED VALVES TO ALSO BE EQUIPPED W/HANDWHEEL OPERATORS.
12. SLIDE GATES TO BE MOUNTED PER MANUFACTURERS RECOMMENDATIONS.
13. CONTRACTOR TO INSTALL A 2" RADIUS FILLET BEFORE AND AFTER THE SCREENS TO PREVENT SEDIMENTATION OF SOLIDS. CONTRACTOR SHALL VERIFY WITH MFR. THAT APPROPRIATE CHANNEL VELOCITY WILL BE MAINTAINED.
14. ACTUATED SLIDE GATE EMERGENCY FLOAT TO AUTOMATICALLY CLOSE GATE IN THE EVENT WATER RISES TO HEADWORKS FLOOR.
15. AT CONTRACTORS OPTION, FLOOR OF HEADWORKS MAY BE POURED LEVEL AT ELEVATION GROUTED TO PROPOSED FLOW LINE ELEVATION.
16. COORDINATE LOCATIONS FOR REQUIRED WASH WATER NON POTABLE WATER MAINS WITH HEADWORKS EQUIPMENT SUPPLIER PRIOR TO INSTALLATION.
17. ELECTRONICALLY OPERATED GATE SHALL BE 480 VOLTS/3 PHASE.
18. CONTRACTOR SHALL SUBMIT A COMPLETE PIPING PLAN FOR APPROVAL.
19. CONTRACTOR SHALL PROVIDE PIPING SUPPORTS AS NEEDED REGARDLESS OF BEING SHOWN ON DRAWINGS.
20. 1.5% SLOPE TOWARD CHANNELS MAY BE GROUTED OR CONSTRUCTED WITH THICKENED SLAB. SLOPE TO START AT TOP OF WALL (T.O.W.) ELEVATION & EXTEND OUTWARD.
21. ALL OPEN AREAS OF HEADWORKS STRUCTURE ARE TO RECEIVE GRATING. SOME GRATING IS NOT SHOWN FOR CLARITY.
22. COORDINATE WITH EQUIPMENT SUPPLIER FOR EXACT REQUIREMENTS OF INLET WATER PIPING PRIOR TO BID.
23. EQUIPMENT DRAINS NOT SHOWN IN PIPING SHALL BE FIELD ROUTED TO HEADWORKS CHANNELS PER MANUFACTURER RECOMMENDATIONS.
24. ENTIRE SYSTEM SHALL BE EQUIPPED WITH A FACTORY DESIGNED FREEZE PROTECTION SYSTEM CONSISTING OF HEAT TAPE, CASE HEATERS AND INSULATION. FREEZE PROTECTION SYSTEM SHALL BE DESIGNED TO ENSURE PROPER OPERATION INDEFENITELY AT -15° FAHRENHEIT. PROVIDE INFORMATION ON FREEZE PROTECTION SYSTEM WITH THE EQUIPMENT SUBMITTAL.
25. ALL EXPOSED PIPING IN HEADWORKS AREA 6" AND SMALLER TO BE GROOVED 316 STAINLESS STEEL. COMPLETE SYSTEM TO BE DESIGNED AND PROVIDED BY VICTAULIC.

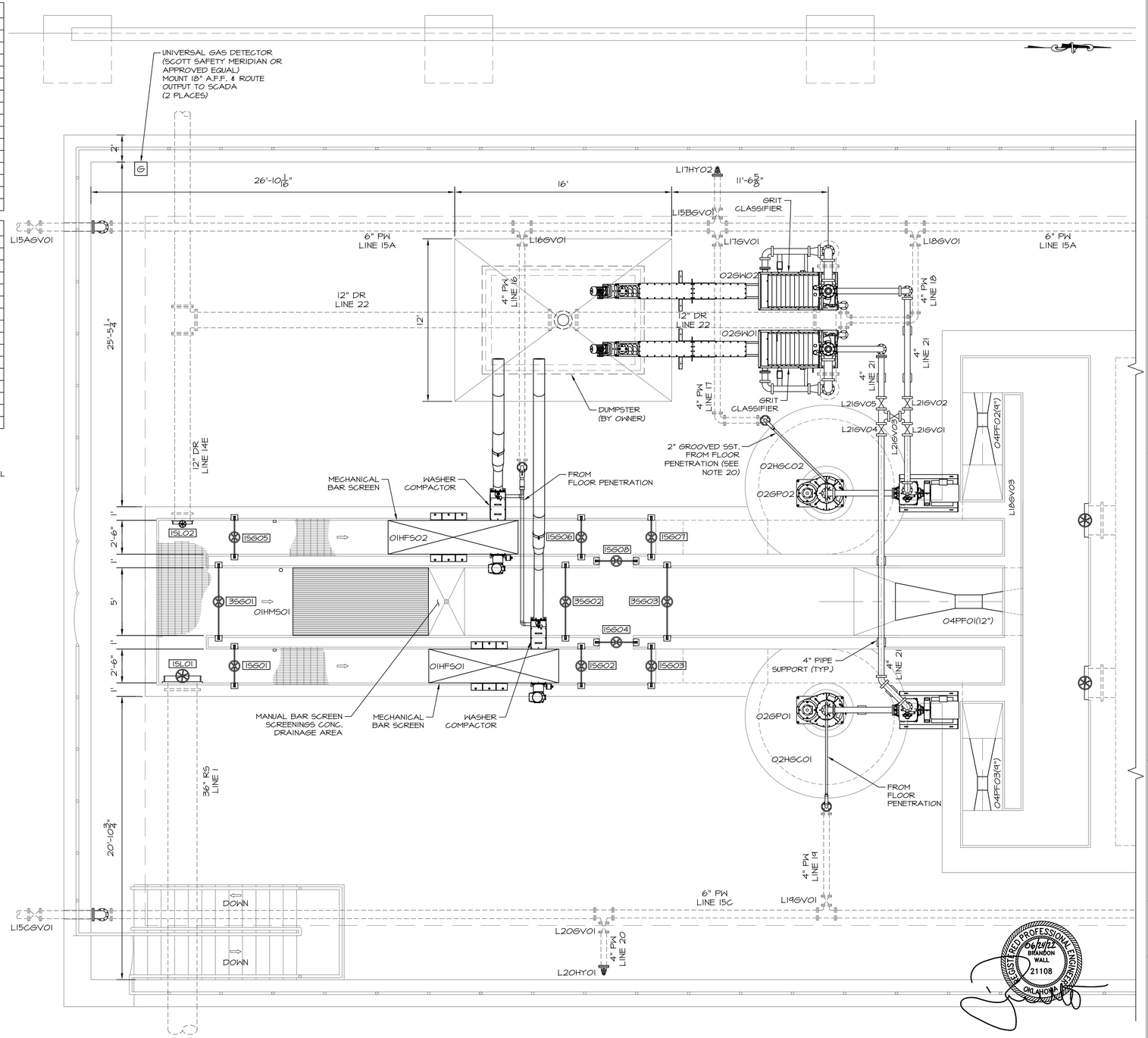

WALL ENGINEERING
223 N. WASHINGTON AVE., DURANT, OK 74701
OKLAHOMA CA #5413 EXP. JUNE 30, 2023

SUBMITTAL / REVISIONS:

DATE	BY	SUBMITTAL / REVISION
03/22	JR	ODEQ SUBMITTAL
06/22	JR	ISSUED FOR BIDDING

SHAWNEE MUNICIPAL AUTHORITY
WASTEWATER SYSTEM IMPROVEMENTS
CONTRACT DOCUMENTS VOL. 4 OF 6 - NORTHSIDE WWTP

INFLUENT BARSCREEN, GRIT REMOVAL AND INFLUENT LIFT STATION
HEADWORKS PLAN VIEW

PROJECT NO.
SHN-20-01
DATE
06/22
DRAWN BY:
JR
CHECKED BY:
BW
REVIEWED BY:
DBW
SCALE:
1/4"=1'-0"

BAR IS ONE INCH ON ORIGINAL DRAWING
0" 1"
IF NOT ONE INCH ON THIS SHEET, ADJUST SCALES ACCORDINGLY

REGISTERED PROFESSIONAL ENGINEER
06/21/22
BRANDON WALL
21108
OKLAHOMA

SHEET
HW-2

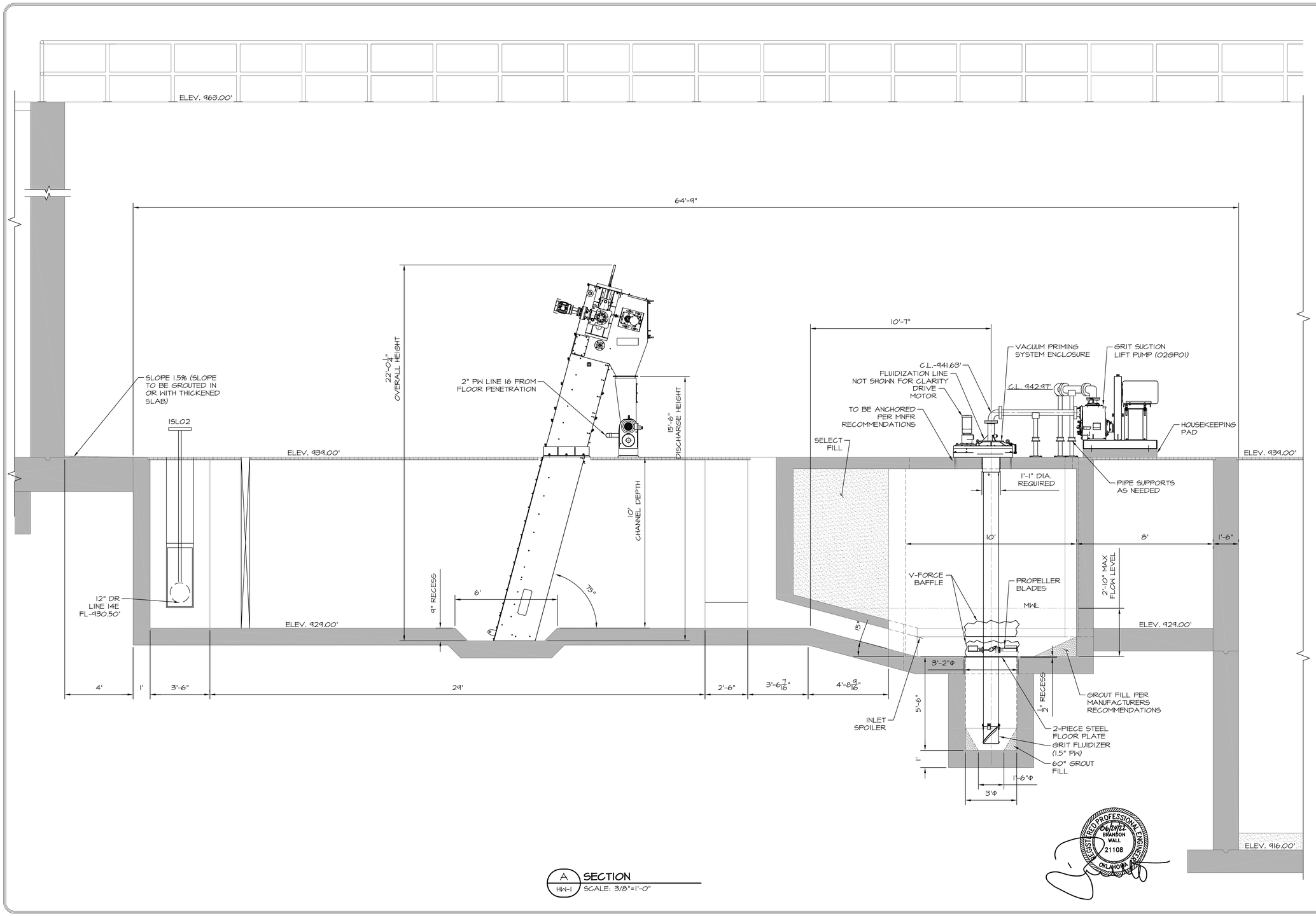

A HW-1 **SECTION**
SCALE: 3/8"=1'-0"

REGISTERED PROFESSIONAL ENGINEER
06/30/23
BRANDON WALL
21108
OKLAHOMA

WALL ENGINEERING
223 N. WASHINGTON AVE. DURANT, OK 74701
OKLAHOMA CA #5413 EXP. JUNE 30, 2023

SUBMITTAL / REVISIONS:

DATE	BY	SUBMITTAL / REVISION
03/22	JR	ODEQ SUBMITTAL
06/22	JR	ISSUED FOR BIDDING

SHAWNEE MUNICIPAL AUTHORITY
WASTEWATER SYSTEM IMPROVEMENTS
CONTRACT DOCUMENTS VOL. 4 OF 6 - NORTHSIDE WWTP

INFLUENT BARSCREEN, GRIT REMOVAL AND INFLUENT LIFT STATION MECHANICAL SECTION VIEW

PROJECT NO.
SHN-20-01
DATE
06/22
DRAWN BY:
JR
CHECKED BY:
BW
REVIEWED BY:
DBW
SCALE:
3/8"=1'-0"

BAR IS ONE INCH ON ORIGINAL DRAWING
0" 1"
IF NOT ONE INCH ON THIS SHEET, ADJUST SCALES ACCORDINGLY

SHEET
HW-3

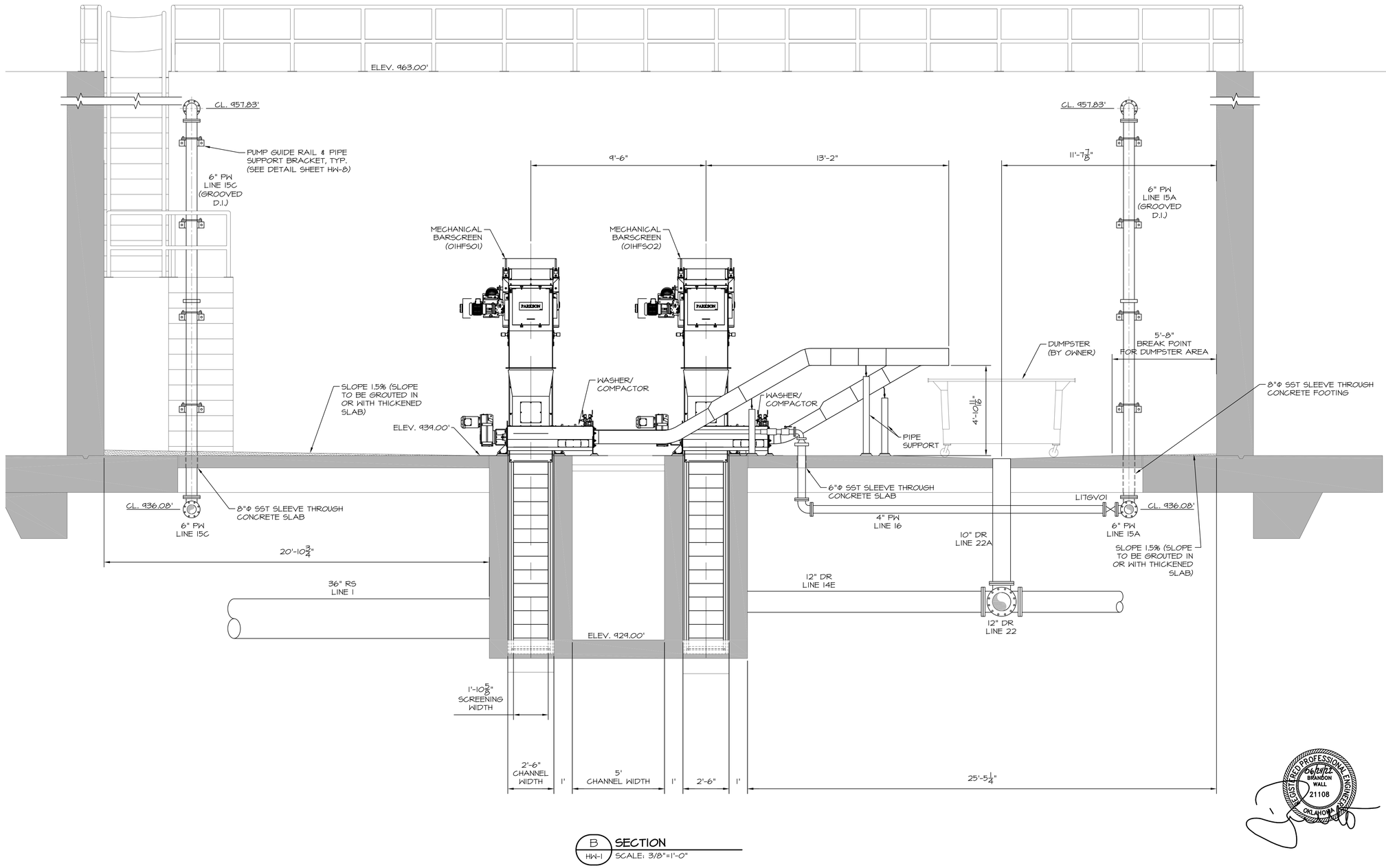

B HW-1 **SECTION**
SCALE: 3/8"=1'-0"

WALL ENGINEERING
223 N. WASHINGTON AVE., DURANT, OK 74701
OKLAHOMA CA #5413 EXP. JUNE 30, 2023

SUBMITTAL / REVISIONS:

DATE	BY	SUBMITTAL / REVISION
03/22	JR	ODEQ SUBMITTAL
06/22	JR	ISSUED FOR BIDDING

SHAWNEE MUNICIPAL AUTHORITY
WASTEWATER SYSTEM IMPROVEMENTS
CONTRACT DOCUMENTS VOL. 4 OF 6 - NORTHSIDE WWTP

INFLUENT BARSCREEN, GRIT REMOVAL AND INFLUENT LIFT STATION MECHANICAL SECTION VIEW

PROJECT NO.
SHN-20-01
DATE
06/22
DRAWN BY:
JR
CHECKED BY:
BW
REVIEWED BY:
DBW
SCALE:
3/8"=1'-0"

BAR IS ONE INCH ON ORIGINAL DRAWING
0" 1"
IF NOT ONE INCH ON THIS SHEET, ADJUST SCALES ACCORDINGLY

REGISTERED PROFESSIONAL ENGINEER
06/14/22
BRANDON WALL
21108
OKLAHOMA

SHEET
HW-4

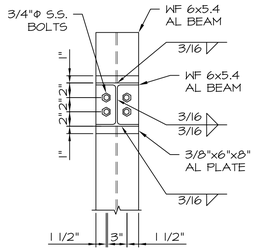

CONNECTION DETAIL
SCALE: NOT TO SCALE

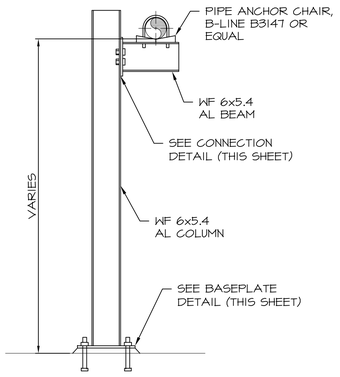

PIPE SUPPORT DETAIL
SCALE: NOT TO SCALE

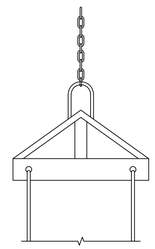

SCREEN LIFTING HARNESS
SCALE: NOT TO SCALE

NOTES:
TO BE SUPPLIED BY SCREEN MANUFACTURER.

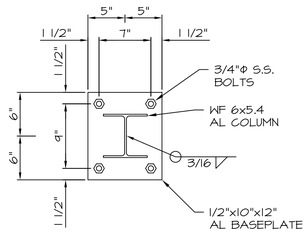

BASE PLATE DETAIL
SCALE: NOT TO SCALE

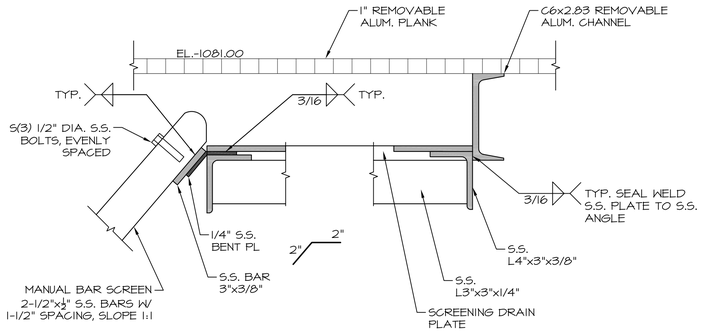

MANUAL BAR SCREEN SUPPORT DETAIL
SCALE: NOT TO SCALE

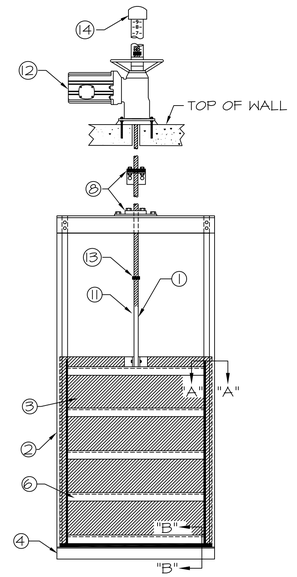

NO.	DESCRIPTION
1	STEM
2	GUIDE RAIL
3	GATE HEAD
4	INVERT MEMBER
5	ANCHOR BOLTS
6	STIFFENER
7	GUIDE BEARING BAR, UHMW
8	STEM GUIDE, W UHMW BUSHING
9	P-SEAL MEMBER
10	P-SEAL, NEOPRENE
11	INVERT SEAL, NEOPRENE RUBBER
12	ELECTRIC MOTOR OPERATOR
13	STOP NUTS
14	STEM COVER

SST FACE MOUNTED SLIDE GATE DETAIL
SCALE: NOT TO SCALE

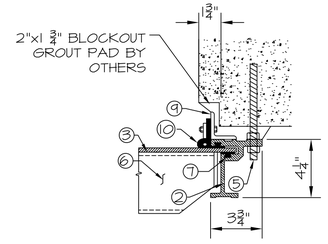

SECTION A-A

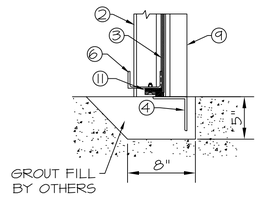

SECTION B-B

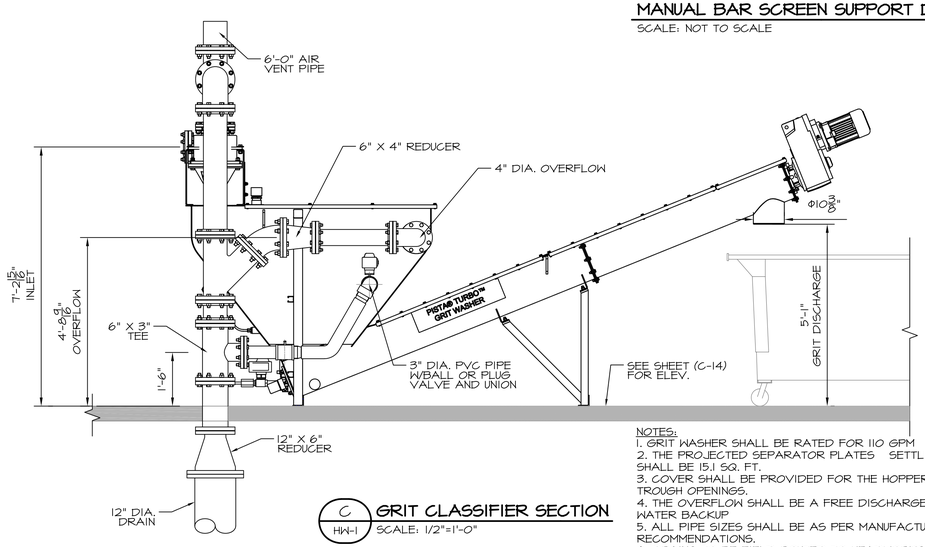

C / HW-1 GRIT CLASSIFIER SECTION
SCALE: 1/2"=1'-0"

NOTES:
1. GRIT WASHER SHALL BE RATED FOR 110 GPM
2. THE PROJECTED SEPARATOR PLATES SETTLING AREA SHALL BE 15.1 SQ. FT.
3. COVER SHALL BE PROVIDED FOR THE HOPPER AND TROUGH OPENINGS.
4. THE OVERFLOW SHALL BE A FREE DISCHARGE W/O WATER BACKUP
5. ALL PIPE SIZES SHALL BE AS PER MANUFACTURERS RECOMMENDATIONS.
6. DRAINS TO BE FIELD ROUTED TO HEADWORKS CHANNEL.

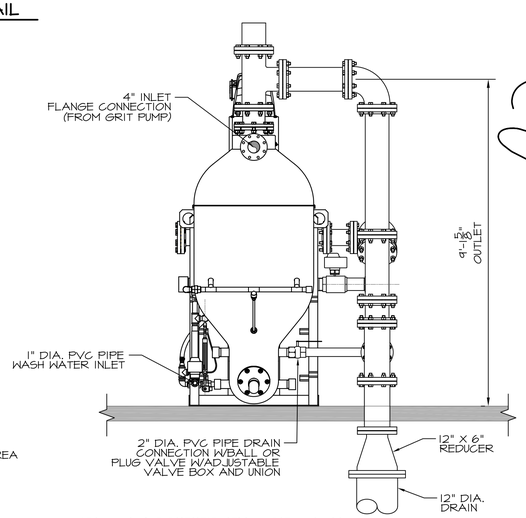

GRIT CLASSIFIER END SECTION
SCALE: 1/2"=1'-0"



NOTES:
1. PROVIDE STEM GUIDES, MAXIMUM OF 5' INTERVALS.
2. PROVIDE 7" WALL ANCHORS FOR GUIDES.
3. PROVIDE SUPPORT STRUCTURE FOR OPERATOR BASED ON INSTALL LOCATION PER MANUFACTURES GUIDELINES.

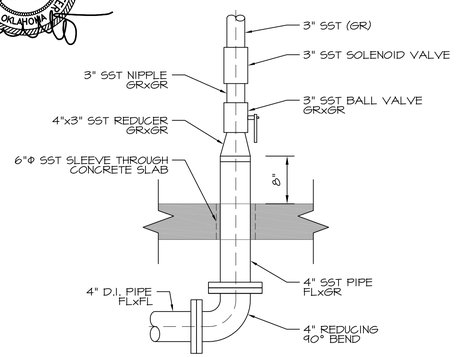

PW FLOOR PENETRATION DETAIL
SCALE: NOT TO SCALE

NOTE:
1. ROUTE SCH. 40 PVC TO EQUIPMENT AS REQUIRED TO THE FOLLOWING: (2) GRIT WASHER, (2) SCREEN, (2) FLUIDIZATION

WALL ENGINEERING
223 N. WASHINGTON AVE., DURANT, OK 74701
OKLAHOMA CA #5413 EXP. JUNE 30, 2023

SUBMITTAL / REVISIONS:	DATE	BY	SUBMITTAL / REVISION
	03/22	JR	ODEQ SUBMITTAL
	06/22	JR	ISSUED FOR BIDDING

SHAWNEE MUNICIPAL AUTHORITY
WASTEWATER SYSTEM IMPROVEMENTS
CONTRACT DOCUMENTS VOL. 4 OF 6 - NORTHSIDE WWTP

INFLUENT BARSCREEN, GRIT REMOVAL AND INFLUENT LIFT STATION MECHANICAL SECTION VIEWS AND DETAILS

PROJECT NO.
SHN-20-01
DATE
06/22
DRAWN BY:
JR
CHECKED BY:
BW
REVIEWED BY:
DBW
SCALE:
1/2"=1'-0"

BAR IS ONE INCH ON ORIGINAL DRAWING
0" 1"
IF NOT ONE INCH ON THIS SHEET, ADJUST SCALES ACCORDINGLY

SHEET
HW-5

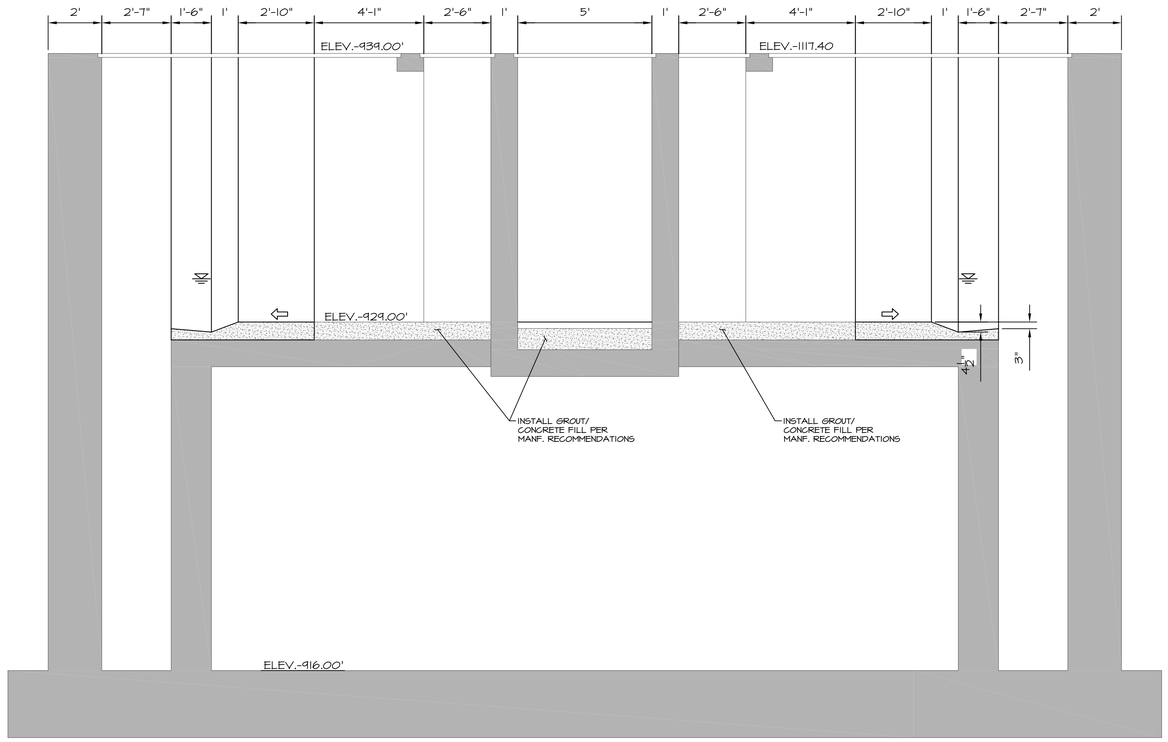

D HW-1 SECTION
SCALE: 3/8"=1'-0"

9" INFLUENT PARSHALL FLUME PLAN VIEW
SCALE: 3/4"=1'-0"

NOTE:
PARSHALL FLUME MUST BE EQUIPPED WITH AN AFFIXED STAFF GAUGE TO MEASURE THE LIQUID LEVEL AND PLACED AT THE PROPER HEAD MEASUREMENT LOCATION.

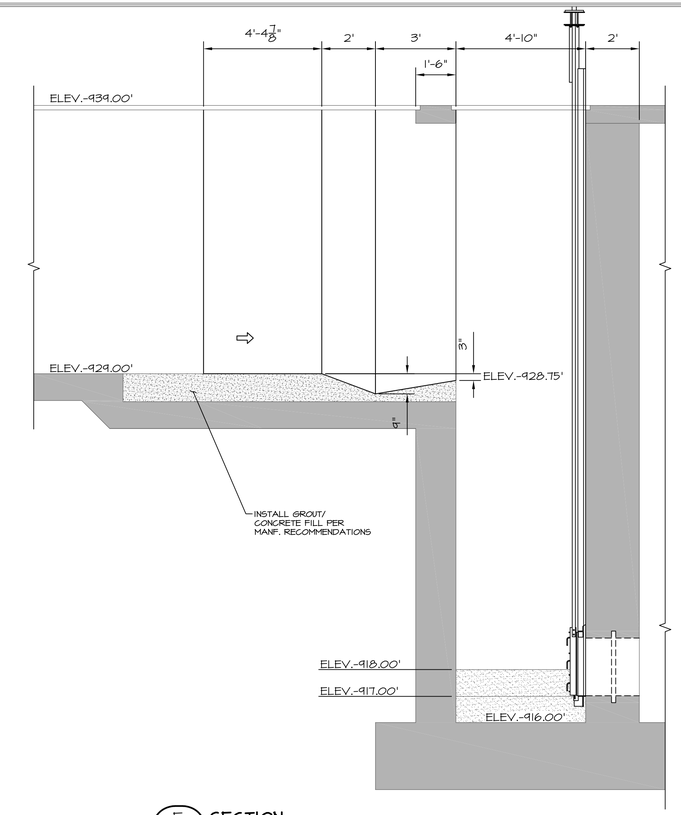

E HW-1 SECTION
SCALE: 3/8"=1'-0"

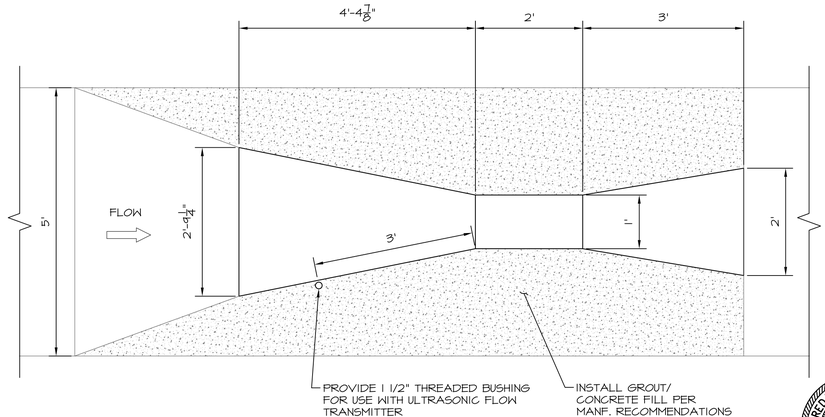

12" INFLUENT PARSHALL FLUME PLAN VIEW
SCALE: 3/4"=1'-0"

NOTE:
PARSHALL FLUME MUST BE EQUIPPED WITH AN AFFIXED STAFF GAUGE TO MEASURE THE LIQUID LEVEL AND PLACED AT THE PROPER HEAD MEASUREMENT LOCATION.

REGISTERED PROFESSIONAL ENGINEER
06/14/23
BRANDON WALL
21108
OKLAHOMA

WALL ENGINEERING
223 N. WASHINGTON AVE., DURANT, OK 74701
OKLAHOMA CA #5413 EXP. JUNE 30, 2023

SUBMITTAL / REVISIONS:

DATE	BY	SUBMITTAL / REVISION
03/22	JR	ODEQ SUBMITTAL
06/22	JR	ISSUED FOR BIDDING

SHAWNEE MUNICIPAL AUTHORITY
WASTEWATER SYSTEM IMPROVEMENTS
CONTRACT DOCUMENTS VOL. 4 OF 6 - NORTHSIDE WWTP

INFLUENT BARSCREEN, GRIT REMOVAL
AND INFLUENT LIFT STATION
MECHANICAL SECTION VIEWS AND DETAILS

PROJECT NO.	SHN-20-01
DATE	06/22
DRAWN BY:	JR
CHECKED BY:	BW
REVIEWED BY:	DBW
SCALE:	AS SHOWN

BAR IS ONE INCH ON ORIGINAL DRAWING
0" 1"
IF NOT ONE INCH ON THIS SHEET, ADJUST SCALES ACCORDINGLY

SHEET
HW-6

PIPING SCHEDULE STRUCTURE #4

NO.	ITEM	DESCRIPTION/NOTES
1	14" D.I. SPOOL, FLxPE	
2	14" D.I. SPOOL, FLxFL	
3	14" D.I. 90° BEND, FLxFL	WITH RESTRAINED GLAND
4	14" FLEXIBLE COUPLING ADAPTER, MJxFL	
5	14" D.I. DISMANTLING JOINT, FLxFL	
6	14" WALL PIPE, FLxPE	WITH THRUST COLLAR
7	18"x18"x14" DI TEE, FLxFL	ECCENTRIC
8	18" D.I. SPOOL, FLxFL	
9	18" D.I. BLIND FLANGE, FL	
10	18"x20" D.I. 90° BEND, FLxFL	ECCENTRIC
11	20" D.I. SPOOL, FLxPE	
12	14" FLANGED MAGNETIC FLOW METER	L2AMM01, L2BMM01, L3AMM01, L3BMM01
13	3" PVC CHECK VALVE	
14	3" SCH. 80 PVC	
15	3" SHC. 80 PVC 90° BEND	
16	FLOOR DRAIN	NEENAH MODEL R-4937-A
17	12"x14" CONCENTRIC REDUCER, FLxFL	
18	PIPE SUPPORT	AS NEEDED, SEE NOTE 7

PUMP SCHEDULE STRUCTURE #4

NO.	FLOW	TDH-DES	FUNCTION	CONTROL	HP	EFFICIENCY MIN.
PP-04101-04104	3,500 GPM	54'	PRIMARY	VFD	75	75.36%

PUMP NOTES:

1. PUMPS SHALL BE PROVIDED WITH BASE ELBOWS, S.S. RAILS, AND S.S. LIFTING CHAINS.
2. CONTRACTOR SHALL PROVIDE FITTINGS AS REQUIRED TO CONNECT BASE ELBOWS TO LIFT STATION PIPING.
3. PUMPS SHALL BE 460 VOLT THREE PHASE.
4. EACH PUMP SHALL BE EQUIPPED WITH A VARIABLE FREQUENCY DRIVE.

NOTES:

1. SEAL CONDUITS TO KEEP WET WELL GASSES OUT OF CONTROL PANEL.
2. LOCATE FLOATS AND CABLE HOLDER AWAY FROM INLET PIPE.
3. WETWELL FLOOR SHALL SLOPE TO PUMPS AS SHOWN.
4. ALL COMPONENTS SUBJECT SHALL BE DUCTILE IRON OR STAINLESS STEEL.
5. ALL ELECTRONICALLY ACTUATED VALVES TO ALSO BE EQUIPPED WITH HAND WHEEL OPERATORS.
6. ALL EXPOSED PIPING SHALL BE FULLY INSULATED AND HEAT TRACED TO PREVENT FROM FREEZING.
7. PIPE SUPPORT LOCATIONS ARE FOR REFERENCE ONLY & MORE MAY BE REQUIRED PER SPECIFICATION REQUIREMENTS AND/OR INDUSTRY STANDARD.
8. WETWELL TO BE EQUIPPED WITH A LEVEL TRANSDUCER AND 3 BACKUP FLOATS (LOW LEVEL, ALARM, INFLUENT CLOSE).
9. ALL HYDRANTS TO BE FURNISHED WITH STAINLESS STEEL WALL MOUNTED HOSE RACK AND 50' OF HEAVY DUTY COMMERCIAL HOSE (1").

316L SS GATE SCHEDULE STRUCTURE #4

GATE IDENTIFICATION	45L01	45L02
GATE TYPE	SLUICE	SLUICE
GATE SIZE	24" Φ	24"
GATE SERIES	924	924
MOUNTING - FRAME	CW	CW
MOUNTING - INVERT	EMBEDED	EMBEDED
HOIST REQUIREMENT		
A. MANUAL	HW	HW
B. ELECTRIC	NO	NO
C. STEM COVER	GS	GS
D. POSITION COVER	MYLAR	MYLAR
E. STEM CONFIGURATION	RISING	RISING
LIFT MOUNTING	YOKE	YOKE
LEAKAGE STANDARD	AWWA	AWWA
OPERATING FLOOR ELEV.	939.00'	939.00'
INVERT ELEV.	917.00'	917.00'

INDEX
FE: EMBEDDED FRAME
HC: HAND CRANK
GS: GALVANIZED STEEL
CW: CHANNEL WALL
SQN: SQUARE NUT

VALVE SCHEDULE STRUCTURE #4

VALVE I.D.	VALVE TYPE	VALVE SIZE	MOTORIZED
L2ACV01	CHECK	14"	NA
L2APV01	PLUG	14"	YES
L2APV02	PLUG	14"	NO
L2AAR01	ARV W/BALL VALVE & COCK	2"	NA
L2BCV01	CHECK	14"	NA
L2BPV01	PLUG	14"	YES
L2BPV02	PLUG	14"	NO
L2BAR01	ARV W/BALL VALVE & COCK	2"	NA
L3ACV01	CHECK	14"	NA
L3APV01	PLUG	14"	YES
L3APV02	PLUG	14"	NO
L3AAR01	ARV W/BALL VALVE & COCK	2"	NA
L3BCV01	CHECK	14"	NA
L3BPV01	PLUG	14"	YES
L3BPV02	PLUG	14"	NO
L3BAR01	ARV W/BALL VALVE & COCK	2"	NA

NOTES:

1. FIELD ROUTE ARV DRAINS TO WETWELL FLOOR DRAIN IN PVC PIPE (NOT SHOWN FOR CLARITY).

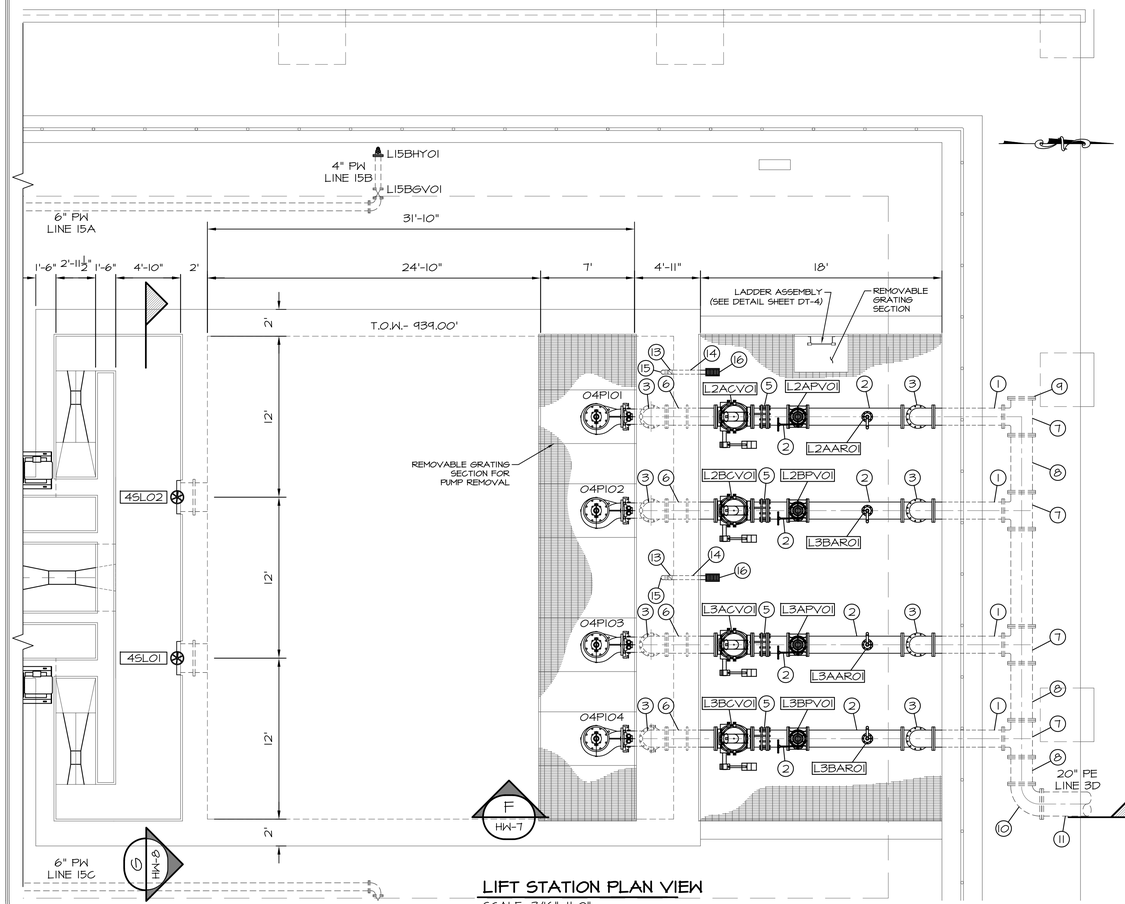

LIFT STATION PLAN VIEW
SCALE: 3/16"=1'-0"

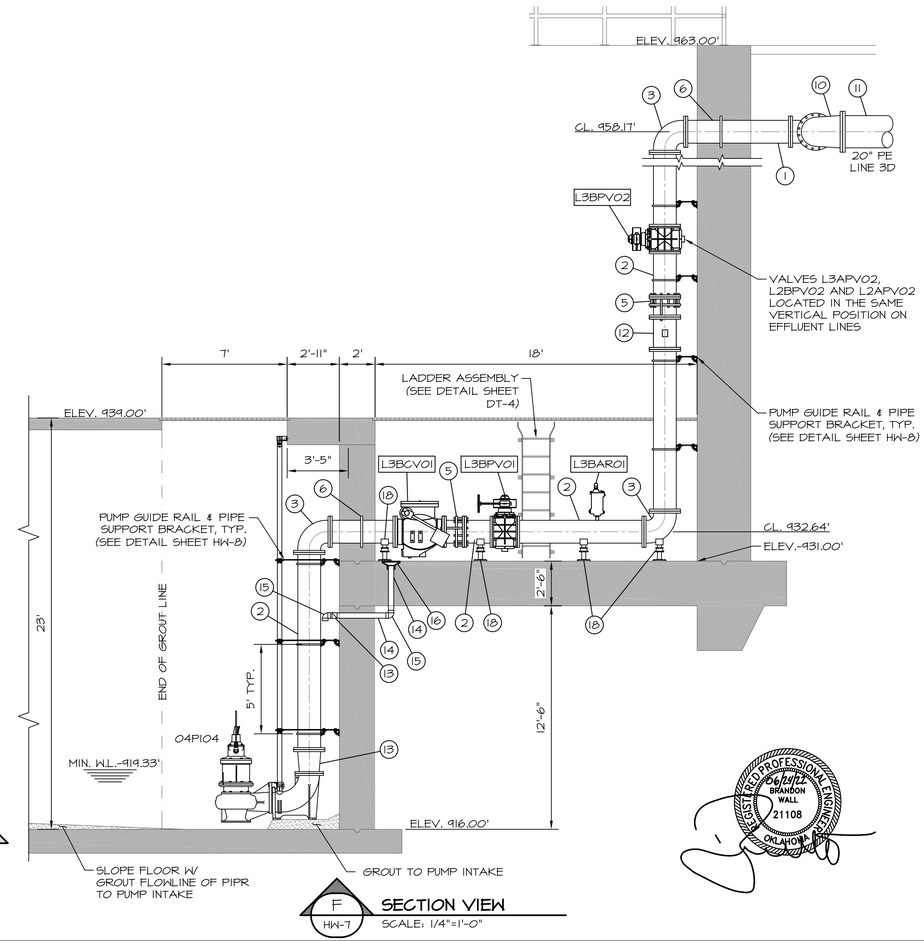

SECTION VIEW
SCALE: 1/4"=1'-0"

REGISTERED PROFESSIONAL ENGINEER
06/24/22
BRANDON WALL
21108
OKLAHOMA

WALL ENGINEERING
223 N. WASHINGTON AVE., DURANT, OK 74701
OKLAHOMA CA #5413 EXP. JUNE 30, 2023

SUBMITTAL / REVISIONS:

DATE	BY	SUBMITTAL / REVISION
03/22	JR	ODEQ SUBMITTAL
06/22	JR	ISSUED FOR BIDDING

SHAWNEE MUNICIPAL AUTHORITY
WASTEWATER SYSTEM IMPROVEMENTS
CONTRACT DOCUMENTS VOL. 4 OF 6 - NORTHSIDE WWTP

INFLUENT BARSCREEN, GRIT REMOVAL AND INFLUENT LIFT STATION LIFT STATION PLAN AND SECTION

PROJECT NO.
SHN-20-01
DATE
06/22
DRAWN BY:
JR
CHECKED BY:
BW
REVIEWED BY:
DBW
SCALE:
AS SHOWN

BAR IS ONE INCH ON ORIGINAL DRAWING
0" 1"
IF NOT ONE INCH ON THIS SHEET, ADJUST SCALES ACCORDINGLY

SHEET
HW-7

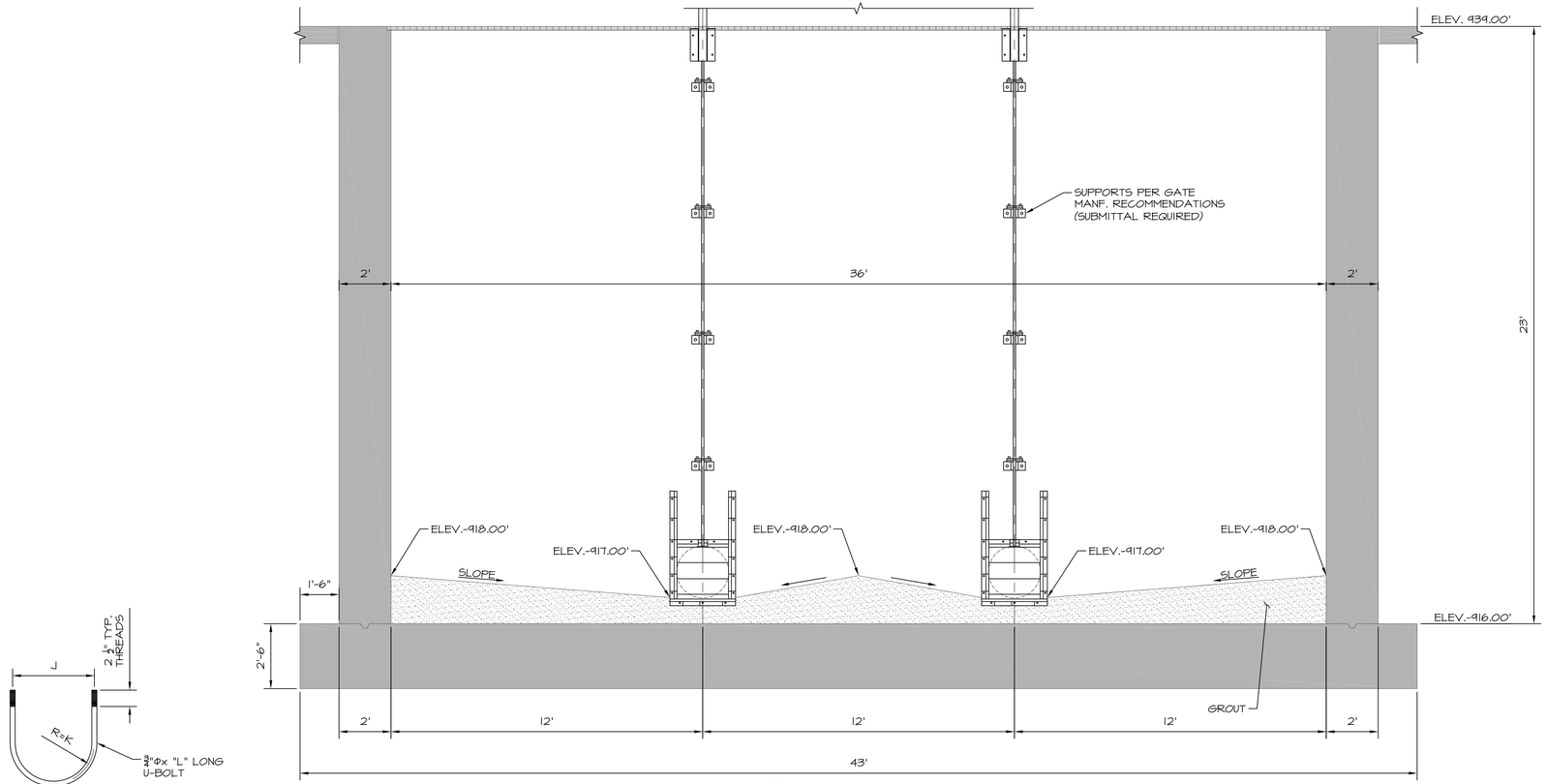

G SECTION
HW-7 SCALE: 3/8"=1'-0"

¾"Φ U-BOLT DETAIL

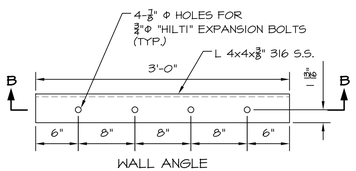

WALL ANGLE
TOP VIEW

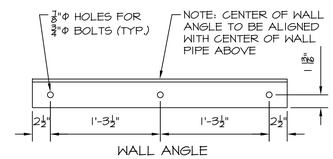

WALL ANGLE
SECTION B-B

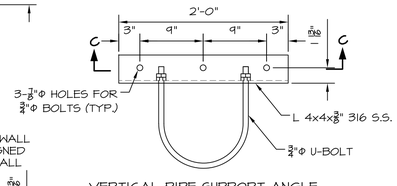

VERTICAL PIPE SUPPORT ANGLE
TOP VIEW

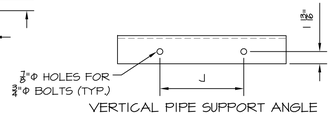

VERTICAL PIPE SUPPORT ANGLE
SECTION C-C

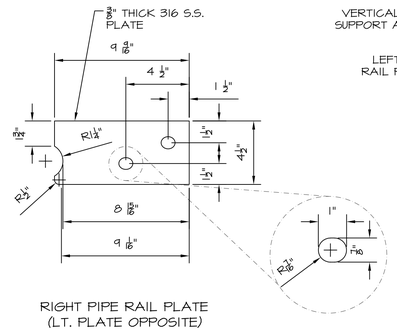

RIGHT PIPE RAIL PLATE
(LT. PLATE OPPOSITE)
TOP VIEW

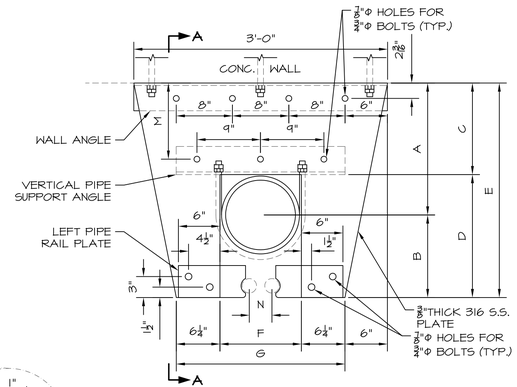

PLAN VIEW

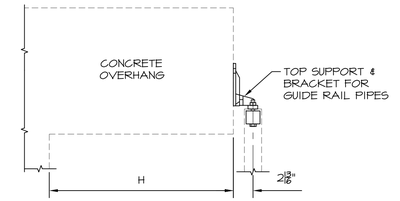

SECTION A-A

316 SST PUMP GUIDE RAIL & PIPE SUPPORT BRACKET
SCALE: NOT TO SCALE

PUMP GUIDE RAIL & PIPE SUPPORT BRACKET - VARIABLE DIMENSIONS

STR #	VERT. PIPE DIA.	A*	B*	C*	D*	E	F*	G	H	J	K	L	M	N*
4	14"	20.1875	19.8750	12.0417	30.1875	42.75	15.50	28.00	35.00	16.00	8.00	19.00	10.3125	4.75
8	14"	21.50	22.125	13.8438	29.7813	43.625	15.50	28.00	36.00	16.00	8.00	19.00	11.6406	8.00
24	14"	21.50	19.50	13.8125	29.875	43.688	15.50	28.00	36.00	16.00	8.00	19.00	11.625	4.75
27	14"	31.996	22.535	24.336	30.195	54.531	15.50	28.00	46.871	16.00	8.00	19.00	22.134	4.75

* CONTRACTOR TO COORDINATE WITH PUMP SUPPLIER FOR VERIFICATION OF EXACT DIMENSIONS PRIOR TO INSTALLATION.

REGISTERED PROFESSIONAL ENGINEER
BRANDON WALL
21108
OKLAHOMA
06/24/22

WALL ENGINEERING
223 N. WASHINGTON AVE. DURANT, OK 74701
OKLAHOMA CA #5413 EXP. JUNE 30, 2023

SUBMITTAL / REVISIONS:

DATE	BY	SUBMITTAL / REVISION
03/22	JR	ODEQ SUBMITTAL
06/22	JR	ISSUED FOR BIDDING

SHAWNEE MUNICIPAL AUTHORITY
WASTEWATER SYSTEM IMPROVEMENTS
CONTRACT DOCUMENTS VOL. 4 OF 6 - NORTHSIDE WWTP

INFLUENT BARSCREEN, GRIT REMOVAL AND INFLUENT LIFT STATION
MECHANICAL SECTION VIEWS AND DETAILS

PROJECT NO.
SHN-20-01
DATE
06/22
DRAWN BY:
JR
CHECKED BY:
BW
REVIEWED BY:
DBW
SCALE:
AS SHOWN

BAR IS ONE INCH ON ORIGINAL DRAWING
0" 1"
IF NOT ONE INCH ON THIS SHEET, ADJUST SCALES ACCORDINGLY

SHEET
HW-8

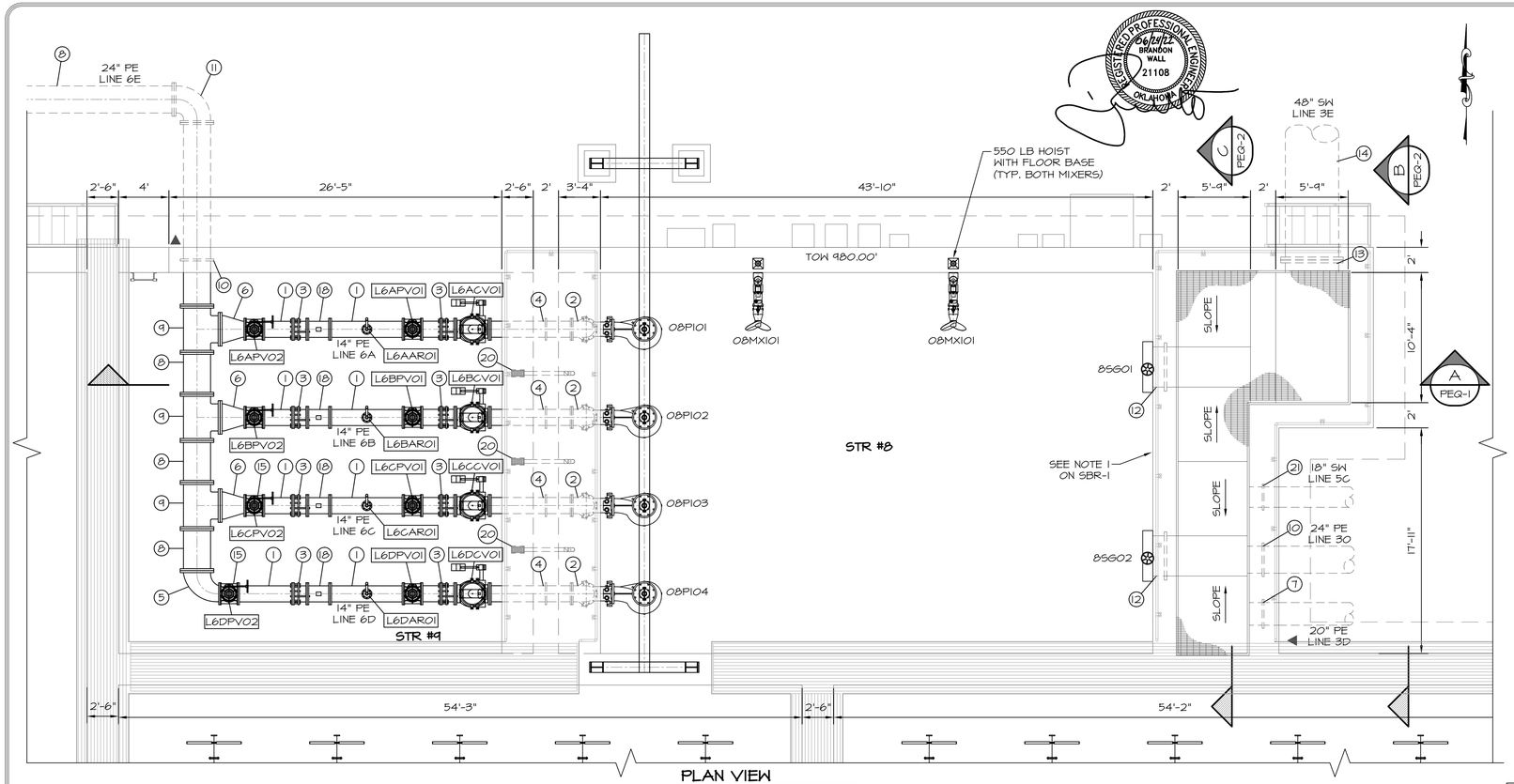

PLAN VIEW
SCALE: 3/16"=1'-0"

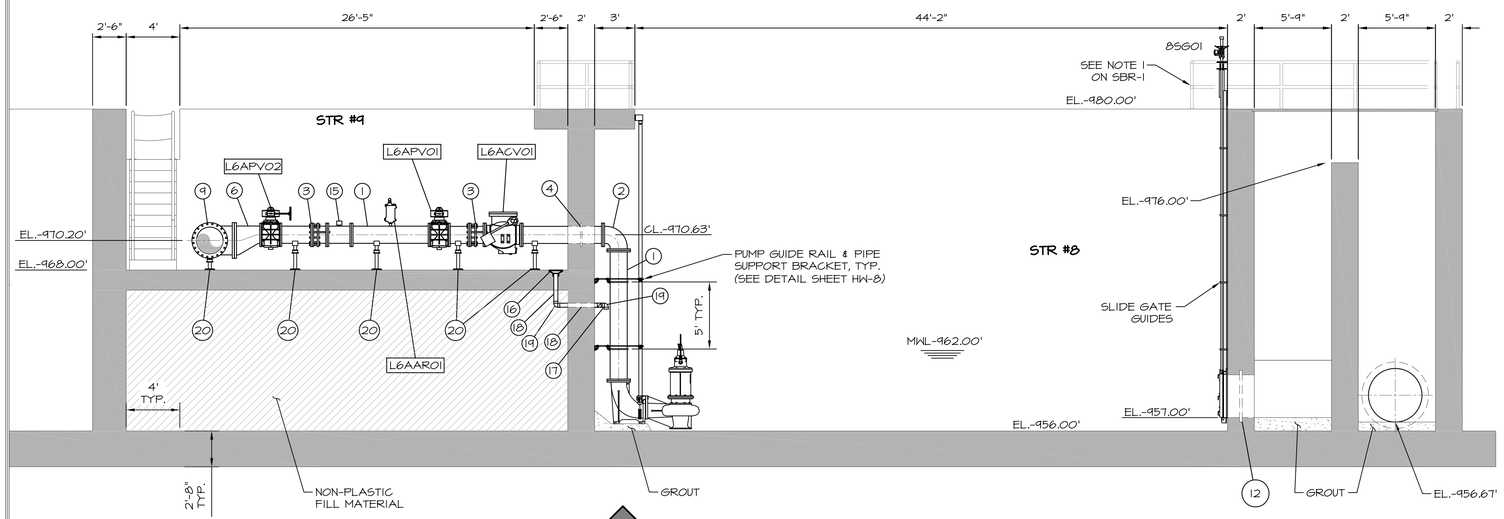

A PEQ-1 SECTION
SCALE: 3/16"=1'-0"

NOTES:

1. SEAL CONDUITS TO KEEP WET WELL GASSES OUT OF CONTROL PANEL.
2. LOCATE FLOATS AND CABLE HOLDER AWAY FROM INLET PIPE.
3. WETWELL FLOOR SHALL SLOPE TO PUMPS AS SHOWN.
4. ALL COMPONENTS SHALL BE DUCTILE IRON OR STAINLESS STEEL.
5. ALL ELECTRONICALLY ACTUATED VALVES TO ALSO BE EQUIPPED WITH HAND WHEEL OPERATORS.
6. PIPE SUPPORT LOCATIONS ARE FOR REFERENCE ONLY & MORE MAY BE REQUIRED PER SPECIFICATION REQUIREMENTS AND/OR INDUSTRY STANDARD.
7. WETWELL TO BE EQUIPPED WITH A LEVEL TRANSDUCER AND 3 BACKUP FLOATS (LOW LEVEL, ALARM, INFLUENT CLOSE).
8. PROVIDE MOTORIZED TROLLEY HOIST CAPABLE OF LIFTING SUBMERSIBLE PUMPS FROM WET WELL FOR MAINTENANCE AND REPAIR.
9. HOIST SUPPLIER SHALL INSPECT AND CERTIFY HOIST INSTALLATION MEETS MINIMUM STANDARDS AND IS APPROPRIATE FOR THIS APPLICATION.

316L SS GATE SCHEDULE STRUCTURE #8

GATE IDENTIFICATION	85G01	45G02
GATE TYPE	SLUICE	SLUICE
GATE SIZE	36" Φ	36" Φ
GATE SERIES	424	424
MOUNTING - FRAME	CW	CW
MOUNTING - INVERT	EMBEDED	EMBEDED
A. MANUAL	HC	HC
B. ELECTRIC*	YES	YES
C. STEM COVER	GS	GS
D. POSITION COVER	MYLAR	MYLAR
E. STEM CONFIGURATION	RISING	RISING
LIFT MOUNTING	YOKE	YOKE
LEAKAGE STANDARD	AWWA	AWWA
OPERATING FLOOR ELEV.	980.00'	980.00'
INVERT ELEV.	957.00'	957.00'

ALL GATES ARE UPWARD OPENING UNLESS OTHERWISE SPECIFIED
*ELECTRICALLY OPERATED GATE: 480 VOLTS/3 PHASE

VALVE SCHEDULE - STRUCTURE #8 & #9

VALVE I.D.	VALVE TYPE	VALVE SIZE	MOTORIZED
L6ACVO1	CHECK	14"	NA
L6APVO1	PLUG	14"	YES
L6AARO1	COMBINATION AIR	2"	NA
L6APVO2	PLUG	14"	NO
L6BCVO1	CHECK	14"	NA
L6BPVO1	PLUG	14"	YES
L6BARO1	COMBINATION AIR	2"	NA
L6BPVO2	PLUG	14"	NO
L6CCVO1	CHECK	14"	NA
L6CPVO1	PLUG	14"	YES
L6CARO1	COMBINATION AIR	2"	NA
L6CPVO2	PLUG	14"	NO
L6DCVO1	CHECK	14"	NA
L6DPVO1	PLUG	14"	YES
L6DARO1	COMBINATION AIR	2"	NA
L6DPVO2	PLUG	14"	NO

PIPING SCHEDULE STRUCTURE #8 & #9

NO.	ITEM	DESCRIPTION
①	14" D.I. SPOOL, FLxFL	
②	14" D.I. 90° BEND, FLxFL	WITH RESTRAINT GLAND
③	14" D.I. DISMANTLING JOINT, FLxFL	
④	14" WALL PIPE, FLxPE	WITH THRUST COLLAR
⑤	14"x24" D.I. REDUCING 90° BEND, FLxFL	ECCENTRIC
⑥	14"x24" D.I. ECCENTRIC REDUCER, FLxFL	ECCENTRIC
⑦	20" D.I. WALL PIPE, FLxPE	
⑧	24" D.I. SPOOL, FLxFL	
⑨	24" D.I. TEE, FLxFL	
⑩	24" D.I. WALL PIPE, FLxPE	WITH THRUST COLLAR
⑪	24" D.I. 90° BEND, FLxFL	
⑫	36" D.I. WALL PIPE, FLxPE	
⑬	48" D.I. WALL PIPE, FLxPE	
⑭	48" D.I. SPOOL, FLxPE	
⑮	14" FLANGED MAGNETIC FLOW METER	L6AMM01, L6BMM01, L6CMM01
⑯	FLOOR DRAIN	NEENAH MODEL R-4937-A
⑰	3" PVC CHECK VALVE	
⑱	3" SCH. 80 PVC	IN 4" D.I. SLEEVE
⑲	3" SCH. 80 PVC 90° BEND	
⑳	ADJUSTABLE PIPE SUPPORT/STAND	
㉑	18" D.I. WALL PIPE, FLxPE	

PUMP SCHEDULE STRUCTURE #8

NO.	FLOW	TDH-DES	FUNCTION	CONTROL	HP	EFFICIENCY MIN.
08PI01-08PI04	4,700 GPM	20'	PRIMARY	VFD	40	78.84%

MIXER SCHEDULE STRUCTURE #8

NO.	TYPE	MANUF.	MODEL	PROPELLER RPM
08MX101-08MX102	SUBMERSIBLE	WILO	TR 75-2.17-6/16	1175

WALL ENGINEERING
223 N. WASHINGTON AVE. DURANT, OK 74701
OKLAHOMA CA #5413 EXP. JUNE 30, 2023

SUBMITTAL / REVISIONS:

DATE	BY	SUBMITTAL / REVISION
03/22	JR	ODEQ SUBMITTAL
06/22	JR	ISSUED FOR BIDDING

SHAWNEE MUNICIPAL AUTHORITY
WASTEWATER SYSTEM IMPROVEMENTS
CONTRACT DOCUMENTS VOL. 4 OF 6 - NORTHSIDE WWTP

PRE-EQUALIZATION BASIN
PLAN, SECTION AND SCHEDULES

PROJECT NO.
SHN-20-01
DATE
06/22
DRAWN BY:
JR
CHECKED BY:
BW
REVIEWED BY:
DBW
SCALE:
AS SHOWN

BAR IS ONE INCH ON ORIGINAL DRAWING
0" 1"
IF NOT ONE INCH ON THIS SHEET, ADJUST SCALES ACCORDINGLY

SHEET
PEQ-1

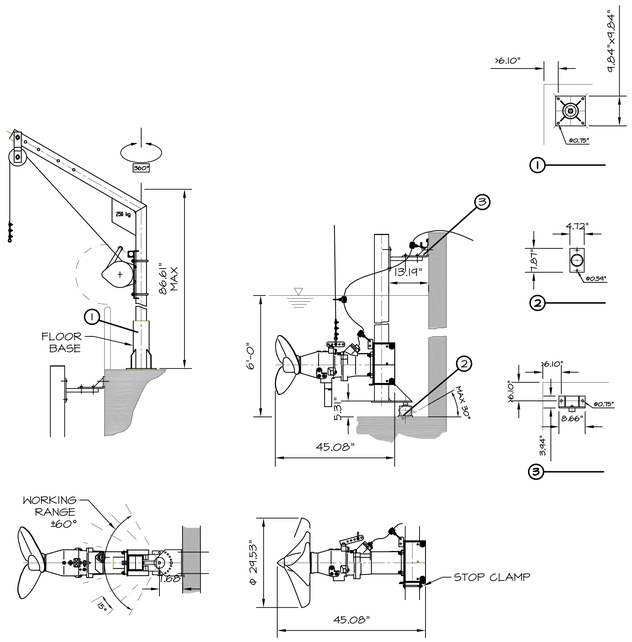

MIXER DETAIL

SCALE: 3/4"=1'-0"

NOTES:

1. COORDINATE WITH MANUFACTURER FOR ADDITIONAL INSTALLATION DETAILS INCLUDING MOUNTING AND ANCHORING.
2. COORDINATE WITH MANUFACTURER FOR NUMBER AND SPACING OF WALL SUPPORTS REQUIRED FOR INSTALLATION.



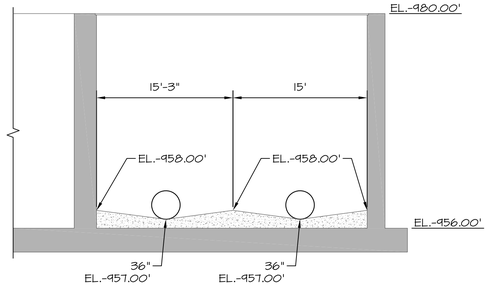

C PEQ-1 **SECTION**

SCALE: 1/8"=1'-0"

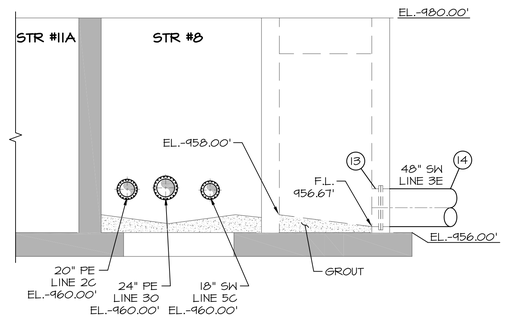

B PEQ-1 **SECTION**

SCALE: 1/8"=1'-0"

NOTES:

1. SEAL CONDUITS TO KEEP WET WELL GASSES OUT OF CONTROL PANEL.
2. LOCATE FLOATS AND CABLE HOLDER AWAY FROM INLET PIPE.
3. WETWELL FLOOR SHALL SLOPE TO PUMPS AS SHOWN.
4. ALL COMPONENTS SHALL BE DUCTILE IRON OR STAINLESS STEEL.
5. ALL ELECTRONICALLY ACTUATED VALVES TO ALSO BE EQUIPPED WITH HAND WHEEL OPERATORS.
6. PIPE SUPPORT LOCATIONS ARE FOR REFERENCE ONLY & MORE MAY BE REQUIRED PER SPECIFICATION REQUIREMENTS AND/OR INDUSTRY STANDARD.
7. WETWELL TO BE EQUIPPED WITH A LEVEL TRANSDUCER AND 3 BACKUP FLOATS (LOW LEVEL ALARM, INFLUENT CLOSE).
8. PROVIDE MOTORIZED TROLLEY HOIST CAPABLE OF LIFTING SUBMERSIBLE PUMPS FROM WET WELL FOR MAINTENANCE AND REPAIR.
9. HOIST SUPPLIER SHALL INSPECT AND CERTIFY HOIST INSTALLATION MEETS MINIMUM STANDARDS AND IS APPROPRIATE FOR THIS APPLICATION.

316L SS GATE SCHEDULE STRUCTURE #8

GATE IDENTIFICATION	85G01	45G02
GATE TYPE	SLUICE	SLUICE
GATE SIZE	36" Φ	36" Φ
GATE SERIES	924	924
MOUNTING - FRAME	CW	CW
MOUNTING - INVERT	EMBEDED	EMBEDED
A. MANUAL	HC	HC
B. ELECTRIC*	YES	YES
C. STEM COVER	GS	GS
D. POSITION COVER	MYLAR	MYLAR
E. STEM CONFIGURATION	RISING	RISING
LIFT MOUNTING	YOKE	YOKE
LEAKAGE STANDARD	AWWA	AWWA
OPERATING FLOOR ELEV.	980.00'	980.00'
INVERT ELEV.	957.00'	957.00'

ALL GATES ARE UPWARD OPENING UNLESS OTHERWISE SPECIFIED
*ELECTRICALLY OPERATED GATE: 480 VOLTS/3 PHASE

VALVE SCHEDULE - STRUCTURE #8 & #9

VALVE I.D.	VALVE TYPE	VALVE SIZE	MOTORIZED
L6ACV01	CHECK	14"	NA
L6APV01	PLUG	14"	YES
L6AAR01	COMBINATION AIR	2"	NA
L6APV02	PLUG	14"	NO
L6BCV01	CHECK	14"	NA
L6BPV01	PLUG	14"	YES
L6BAR01	COMBINATION AIR	2"	NA
L6BPV02	PLUG	14"	NO
L6CCV01	CHECK	14"	NA
L6CPV01	PLUG	14"	YES
L6CAR01	COMBINATION AIR	2"	NA
L6CPV02	PLUG	14"	NO
L6DCV01	CHECK	14"	NA
L6DPV01	PLUG	14"	YES
L6DAR01	COMBINATION AIR	2"	NA
L6DPV02	PLUG	14"	NO

PIPING SCHEDULE STRUCTURE #8 & #9

NO.	ITEM	DESCRIPTION
①	14" D.I. SPOOL, FLxFL	
②	14" D.I. 90° BEND, FLxFL	WITH RESTRAINT GLAND
③	14" D.I. DISMANTLING JOINT, FLxFL	
④	14" WALL PIPE, FLxPE	WITH THRUST COLLAR
⑤	14"x24" D.I. REDUCING 90° BEND, FLxFL	ECCENTRIC
⑥	14"x24" D.I. ECCENTRIC REDUCER, FLxFL	ECCENTRIC
⑦	20" D.I. WALL PIPE, FLxPE	
⑧	24" D.I. SPOOL, FLxFL	
⑨	24" D.I. TEE, FLxFL	
⑩	24" D.I. WALL PIPE, FLxPE	WITH THRUST COLLAR
⑪	24" D.I. 90° BEND, FLxFL	
⑫	36" D.I. WALL PIPE, FLxPE	
⑬	48" D.I. WALL PIPE, FLxPE	
⑭	48" D.I. SPOOL, FLxPE	
⑮	14" FLANGED MAGNETIC FLOW METER	L6AMM01, L6BMM01, L6CMM01
⑯	FLOOR DRAIN	NEENAH MODEL R-4937-A
⑰	3" PVC CHECK VALVE	
⑱	3" SCH. 80 PVC	IN 4" D.I. SLEEVE
⑲	3" SCH. 80 PVC 90° BEND	
⑳	ADJUSTABLE PIPE SUPPORT/STAND	
㉑	18" D.I. WALL PIPE, FLxPE	

PUMP SCHEDULE STRUCTURE #8

NO.	FLOW	TDH-DES	FUNCTION	CONTROL	HP	EFFICIENCY MIN.
08P101-08P104	4,700 GPM	20'	PRIMARY	VFD	40	78.84%

MIXER SCHEDULE STRUCTURE #8

NO.	TYPE	MANUF.	MODEL	PROPELLER RPM
08MX101-08MX102	SUBMERSIBLE	WILO	TR 75-2.17-6/16	1175

WALL ENGINEERING
223 N. WASHINGTON AVE. DURANT, OK 74701
OKLAHOMA CA #5413 EXP. JUNE 30, 2023

SUBMITTAL / REVISIONS:

DATE	BY	SUBMITTAL / REVISION
03/22	JR	ODEQ SUBMITTAL
06/22	JR	ISSUED FOR BIDDING

SHAWNEE MUNICIPAL AUTHORITY
WASTEWATER SYSTEM IMPROVEMENTS
CONTRACT DOCUMENTS VOL. 4 OF 6 - NORTHSIDE WWTP

PRE-EQUALIZATION BASIN
SECTION, DETAILS AND SCHEDULES

PROJECT NO.
SHN-20-01
DATE
06/22
DRAWN BY:
JR
CHECKED BY:
BW
REVIEWED BY:
DBW
SCALE:
AS SHOWN

BAR IS ONE INCH ON ORIGINAL DRAWING
0" 1"
IF NOT ONE INCH ON THIS SHEET, ADJUST SCALES ACCORDINGLY

SHEET
PEQ-2

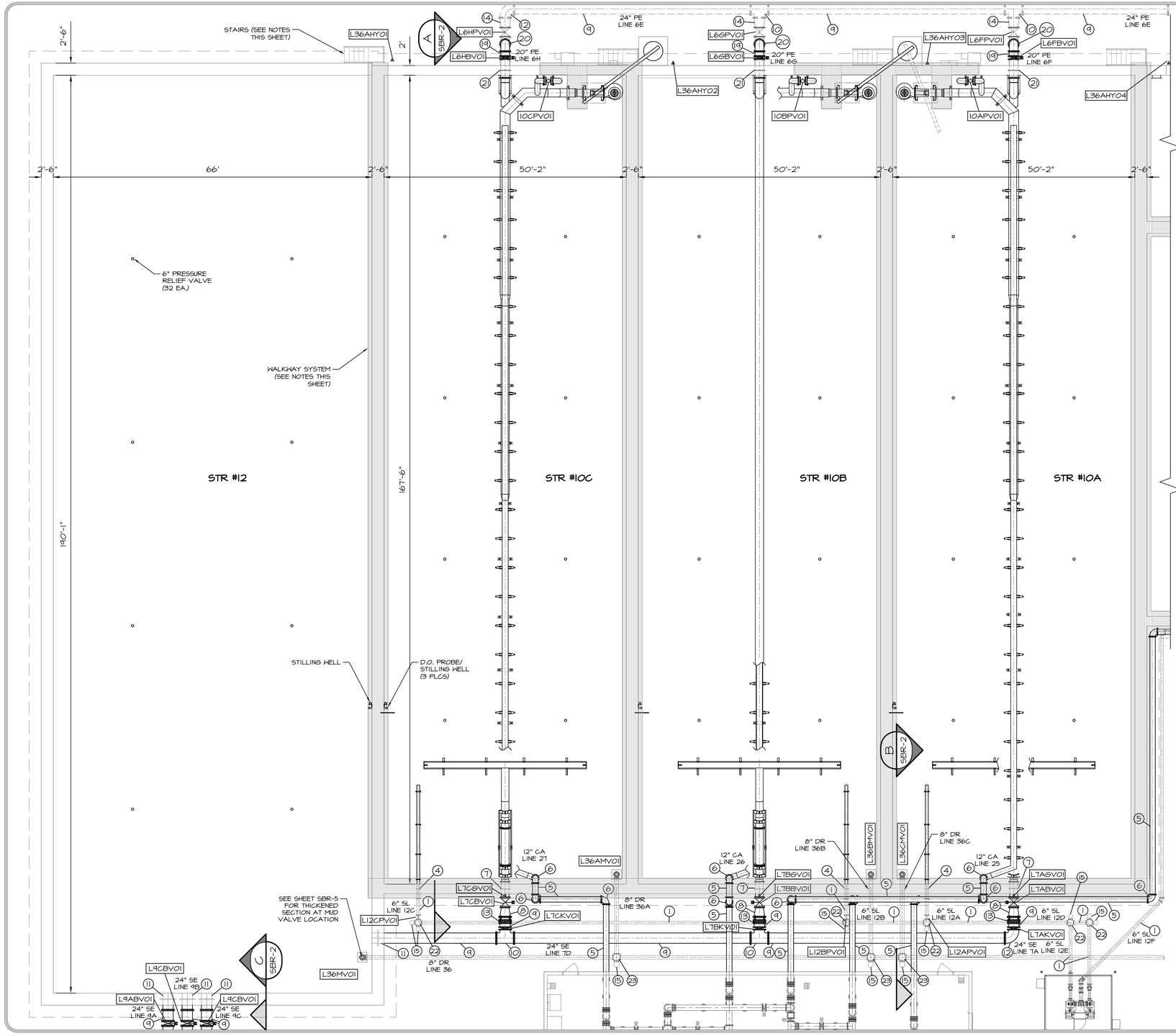

HANDRAIL/WALKWAY NOTES:

1. COMPLETE HANDRAIL SYSTEM (INCLUDING STAIRS AND PUMP MAINTENANCE PLATFORM) TO BE FURNISHED AS A SYSTEM (INCLUDING PRE-EQ BASIN) FROM A SINGLE SUPPLIER. COMPLETE SYSTEM TO BE STAMPED BY AND OKLAHOMA STRUCTURAL ENGINEER (S.E.).
2. COORDINATE WITH PUMP SUPPLIER TO VERIFY CLEARING REQUIRED FOR MOTIVE PUMP REMOVAL.
3. STAIRS TO BE AS CLOSE AS PRACTICAL TO SBR WALL.

VALVE SCHEDULE - STRUCTURE #10A-10C & #12

VALVE I.D.	VALVE TYPE	VALVE SIZE	MOTORIZED
L6FPV01	PLUG	20"	NO
L6FBV01	BUTTERFLY	20"	YES
L7ABV01	BUTTERFLY	18"	YES
L7AKV01	KNIFE	24"	NO
L6GPV01	PLUG	20"	NO
L6GBV01	BUTTERFLY	20"	YES
L7BBV01	BUTTERFLY	18"	YES
L7BKV01	KNIFE	24"	NO
L6HPV01	PLUG	20"	NO
L6HBV01	BUTTERFLY	20"	YES
L7CBV01	BUTTERFLY	18"	YES
L7CKV01	KNIFE	24"	NO
10APV01	PLUG	12"	NO
10BPV01	PLUG	12"	NO
10CPV01	PLUG	12"	NO
L12APV01	PLUG	6"	YES
L12BPV01	PLUG	6"	YES
L12CPV01	PLUG	6"	YES
L9ABV01	BUTTERFLY	24"	YES
L9BBV01	BUTTERFLY	24"	YES
L9CBV01	BUTTERFLY	24"	YES
L36AMV01	MUD	8"	NO
L36BMV01	MUD	8"	NO
L36CMV01	MUD	8"	NO
L7AGV01	GLOBE	¾"	NO
L7BGV01	GLOBE	¾"	NO
L7CGV01	GLOBE	¾"	NO

NOTES:

1. MUD VALVES SHALL BE FURNISHED WITH STEM, WALL ANCHORS, AND HANDWHEEL OPERATOR IN A COMPLETE SYSTEM FOR WALL MOUNTING WITH WHEEL OPERATOR AT WALKWAY LEVEL. SUBMITTAL REQUIRED.
2. ALL MOTORIZED VALVES TO BE SUPPLIED WITH HANDWHEEL OPERATORS.
3. L10APV01, L10BPV01, AND L10CPV01 TO BE FURNISHED WITH STEMS AND STEM SUPPORTS TO EXTEND TO THE TOP OF THE BASIN WALL PER THE MANUFACTURERS RECOMMENDATIONS.
4. GLOBE VALVES TO BE USED TO FILL SBR DECANTER TO RELEASE AIR.
5. AIR PIPING TO BE SUPPORTED TO PREVENT SLIPPAGE AND TO BE LOOSELY ATTACHED TO ALLOW PIPE MOVEMENT.
6. AIR PIPING SHALL BE GROOVED DUCTILE IRON. COMPLETE SYSTEM TO BE DESIGNED AND FURNISHED BY VICTAULIC.

PIPING SCHEDULE STRUCTURE #10A-10C & #12

NO.	ITEM	DESCRIPTION/NOTES
1	6" D.I. SPOOL, FLxFL	
2	6" D.I. 90° BEND, FLxFL	
3	6" D.I. TEE, FLxFL	
4	6" D.I. WALL PIPE, FLxPE	WITH THRUST COLLAR
5	12" D.I. SPOOL, GRxGR	NOTE 6 (SBR-3)
6	12" D.I. 90° BEND, GRxGR	NOTE 6 (SBR-3)
7	18" D.I. WALL PIPE, FLxPE	WITH THRUST COLLAR
8	18"x24" D.I. ECCENTRIC REDUCER, FLxFL	ECCENTRIC
9	24" D.I. SPOOL, FLxFL	
10	24" D.I. TEE, FLxFL	
11	24" D.I. WALL PIPE, FLxFL	WITH THRUST COLLAR
12	24" D.I. 90° BEND, FLxFL	
13	24" D.I. DISMANTLING JOINT, FLxFL	
14	24"x20" D.I. ECCENTRIC REDUCER, FLxFL	ECCENTRIC
15	CLEANOUT	SEE DETAIL SHEETS
16	12" EXPANSION JOINT	
17	ADJUSTABLE PIPE SUPPORT/STAND	SPACE AS NEEDED
18	WALL MOUNTED PIPE SUPPORT	
19	20" D.I. SPOOL, FLxFL	
20	20" D.I. 90° BEND, FLxFL	
21	20" D.I. WALL PIPE, FLxPE	WITH THRUST COLLAR
22	6" D.I. CROSS, FLxFL	
23	8" D.I. CROSS, FLxFL	
24	CONCRETE PIPE SUPPORT	

NOTES:
1. PROVIDE PIPE SUPPORTS AS NECESSARY. NOT SHOWN FOR CLARITY.

REGISTERED PROFESSIONAL ENGINEER
6/15/22
BRANDON WALL
21108
OKLAHOMA

WALL ENGINEERING
223 N. WASHINGTON AVE., DURANT, OK 74701
OKLAHOMA CA #5413 EXP. JUNE 30, 2023

SUBMITTAL / REVISIONS:

DATE	BY	SUBMITTAL / REVISION
03/22	JR	ODEQ SUBMITTAL
06/22	JR	ISSUED FOR BIDDING

SHAWNEE MUNICIPAL AUTHORITY
WASTEWATER SYSTEM IMPROVEMENTS
CONTRACT DOCUMENTS VOL. 4 OF 6 - NORTHSIDE WWTP

SEQUENCING BATCH REACTOR
PLAN VIEW AND SCHEDULES

PROJECT NO.
SHN-20-01
DATE
06/22
DRAWN BY:
JR
CHECKED BY:
BW
REVIEWED BY:
DBW
SCALE:
3/32"=1'-0"

BAR IS ONE INCH ON ORIGINAL DRAWING
0" 1"
IF NOT ONE INCH ON THIS SHEET, ADJUST SCALES ACCORDINGLY

SHEET
SBR-1

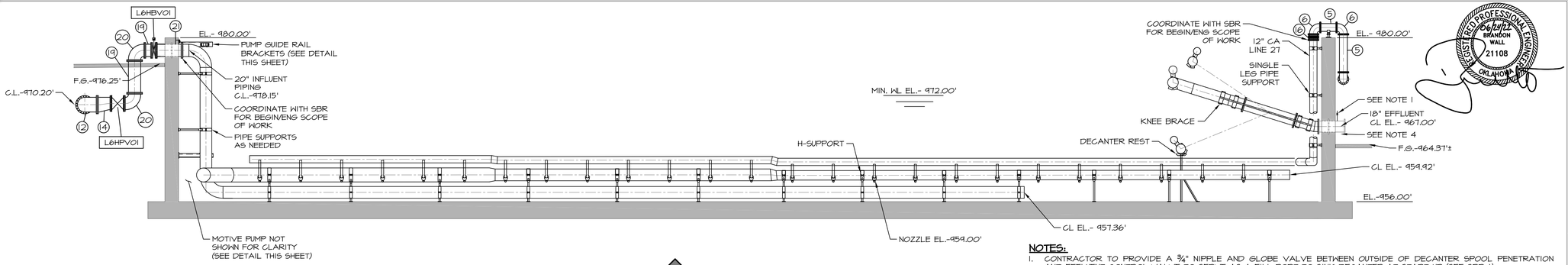

A SBR-1 **SECTION**
SCALE: 1/8"=1'-0"

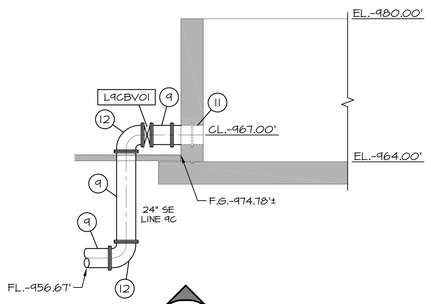

C SBR-1 **SECTION**
SCALE: 1/8"=1'-0"

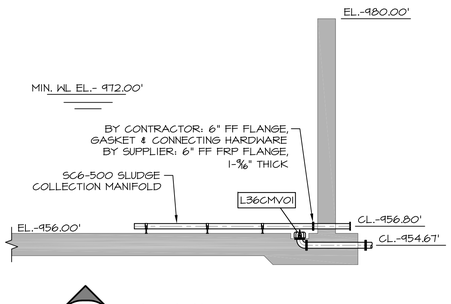

B SBR-1 **SECTION**
SCALE: 1/8"=1'-0"

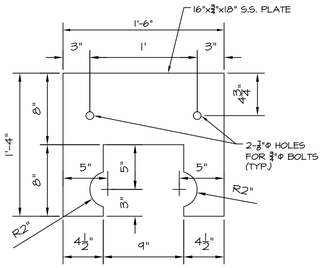

PIPE GUIDE PLATE
SCALE: 1-1/2""=1'-0"

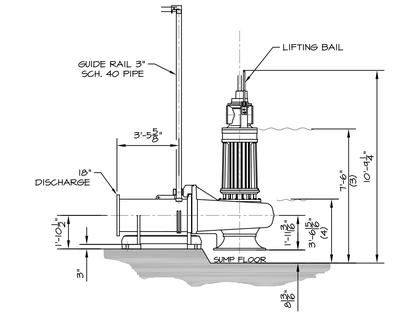

MOTIVE PUMP DETAIL
SCALE: 1/4"=1'-0"

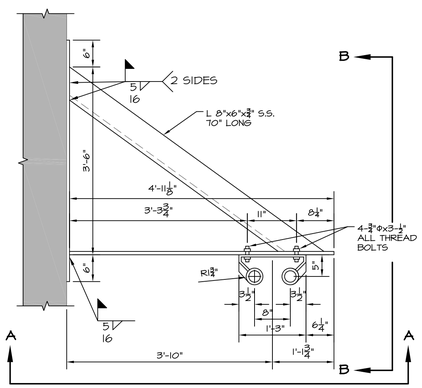

TOP PUMP GUIDE RAIL BRACKET
SCALE: 3/4"=1'-0"

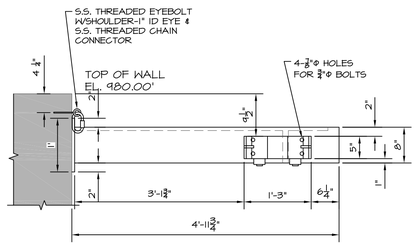

SECTION A-A
SCALE: 3/4"=1'-0"

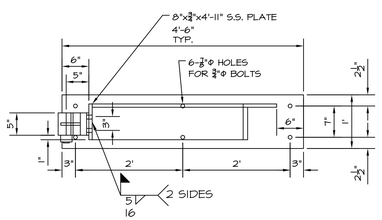

SECTION B-B
SCALE: 3/4"=1'-0"

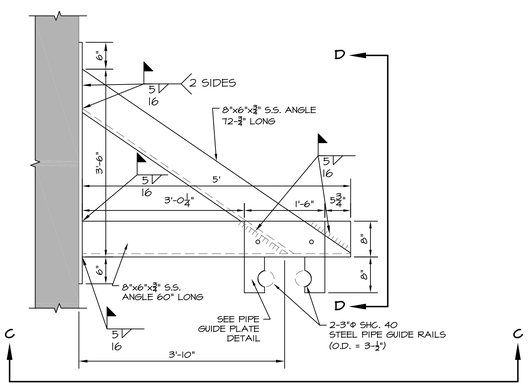

PUMP GUIDE RAIL BRACKET
SCALE: 3/4"=1'-0"

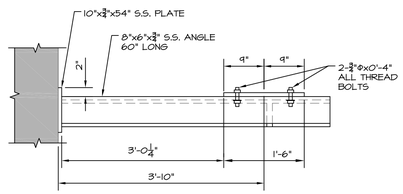

SECTION C-C
SCALE: 3/4"=1'-0"

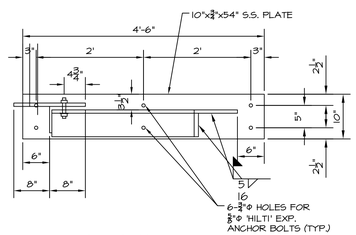

SECTION D-D
SCALE: 3/4"=1'-0"

WALL ENGINEERING
223 N. WASHINGTON AVE., DURANT, OK 74701
OKLAHOMA CA #5413 EXP. JUNE 30, 2023

REGISTERED PROFESSIONAL ENGINEER
06/21/22
BRANDON WALL
21108
OKLAHOMA

NOTES:
1. CONTRACTOR TO PROVIDE A ¾" NIPPLE AND GLOBE VALVE BETWEEN OUTSIDE OF DECANTER SPOOL PENETRATION AND EFFLUENT CONTROL VALVE TO SERVE AS A FILL PORT TO SINK DECANTER AT START-UP (SEE SBR-1).
2. DECANTER OUTLET PIPING MUST BE DESIGNED WITH A SUBMERGED OUTLET OR TRAPS TO PREVENT AIR FROM ENTERING THE DECANTER.
3. ALL PIPE ELEVATIONS SHOWN ARE CENTER OF PIPE UNLESS OTHERWISE INDICATED.
4. ALL FRP PIPE AND FITTINGS SHALL BE 75 PSI MIN. PRESSURE RATING.
5. ALL FLANGES FURNISHED BY SUPPLIER SHALL MEET OUTSIDE DIAMETER, BOLT CIRCLE DIAMETER, NUMBER AND SIZE OF HOLES PER ANSI B.16.1 125 LB. CAST IRON, AND ANSI B16.5 150 LB. STEEL FLANGE SPECIFICATIONS.
6. GASKETS PROVIDED BY SUPPLIER SHALL BE 3/16" THICK, FULL FACE BUNA-N RUBBER, WITH A DUROMETER HARDNESS OF 40-50.
7. COORDINATE DECANTER REST ELEVATION W/SUPPLIER.
8. COORDINATE SBR INTERNAL COMPONENTS WITH SUPPLIER TO ESTABLISH SCOPE OF SUPPLY AND VENDER/CONTRACTOR RESPONSIBILITIES.

SUBMITTAL / REVISIONS:

DATE	BY	SUBMITTAL / REVISION
03/22	JR	ODEQ SUBMITTAL
05/22	JR	REVISED PER ODEQ COMMENT
06/22	JR	ISSUED FOR BIDDING

SHAWNEE MUNICIPAL AUTHORITY
WASTEWATER SYSTEM IMPROVEMENTS - NORTHSIDE WWTP
CONTRACT DOCUMENTS VOL. 4 OF 6

SEQUENCING BATCH REACTOR
SECTION VIEWS AND DETAILS

PROJECT NO.
SHN-20-01
DATE
06/22
DRAWN BY:
JR
CHECKED BY:
BW
REVIEWED BY:
DBW
SCALE:
1/16"=1'-0"

BAR IS ONE INCH ON ORIGINAL DRAWING
0" 1"
IF NOT ONE INCH ON THIS SHEET, ADJUST SCALES ACCORDINGLY

SHEET
SBR-2

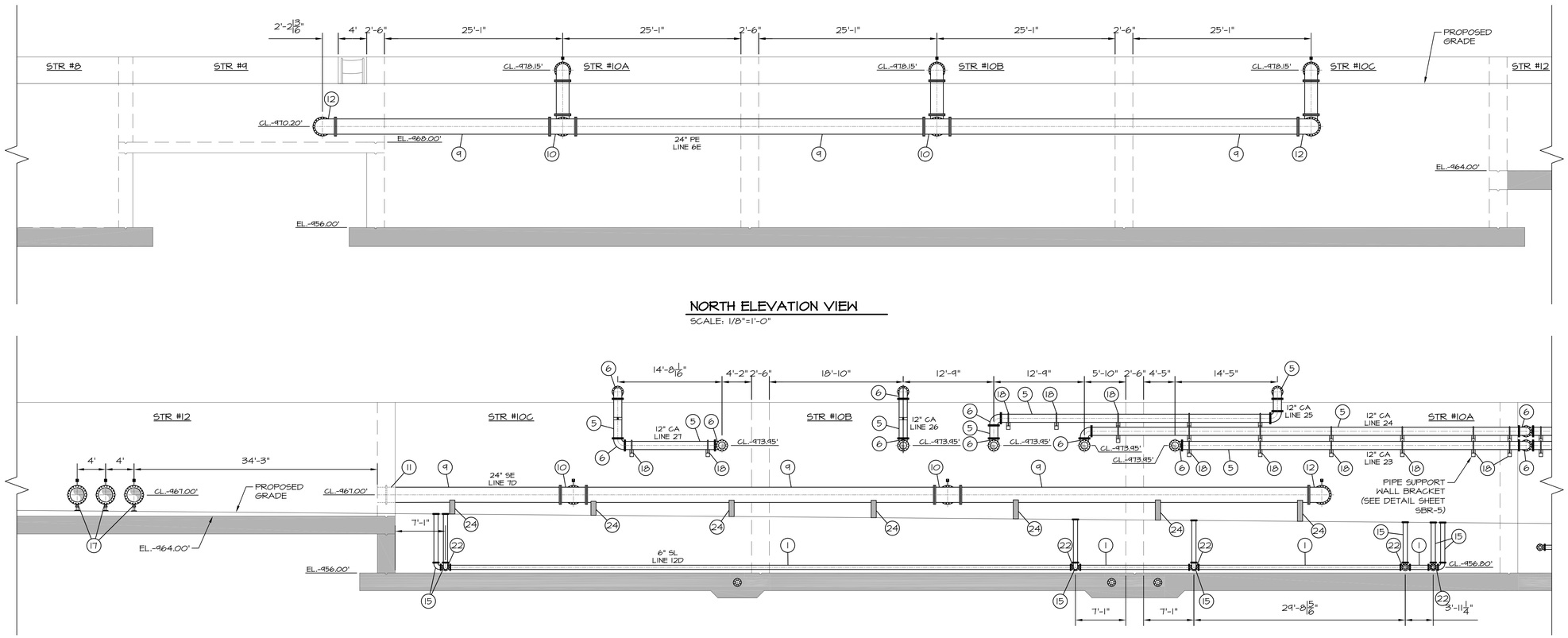

NORTH ELEVATION VIEW

SCALE: 1/8"=1'-0"

SOUTH ELEVATION VIEW

SCALE: 1/8"=1'-0"

DESIGNED AND FURNISHED BY VICTAULIC.

PIPING SCHEDULE STRUCTURE #10A-10C & #12		
NO.	ITEM	DESCRIPTION/NOTES
①	6" D.I. SPOOL, FLxFL	
②	6" D.I. 90° BEND, FLxFL	
③	6" D.I. TEE, FLxFL	
④	6" D.I. WALL PIPE, FLxPE	WITH THRUST COLLAR
⑤	12" D.I. SPOOL, GRxGR	NOTE 6 (SBR-3)
⑥	12" D.I. 90° BEND, GRxGR	NOTE 6 (SBR-3)
⑦	18" D.I. WALL PIPE, FLxPE	WITH THRUST COLLAR
⑧	18"x24" D.I. ECCENTRIC REDUCER, FLxFL	ECCENTRIC
⑨	24" D.I. SPOOL, FLxFL	
⑩	24" D.I. TEE, FLxFL	
⑪	24" D.I. WALL PIPE, FLxFL	WITH THRUST COLLAR
⑫	24" D.I. 90° BEND, FLxFL	
⑬	24" D.I. DISMANTLING JOINT, FLxFL	
⑭	24"x20" D.I. ECCENTRIC REDUCER, FLxFL	ECCENTRIC
⑮	CLEANOUT	SEE DETAIL SHEETS
⑯	12" EXPANSION JOINT	
⑰	ADJUSTABLE PIPE SUPPORT/STAND	SPACE AS NEEDED
⑱	WALL MOUNTED PIPE SUPPORT	
⑲	20" D.I. SPOOL, FLxFL	
⑳	20" D.I. 90° BEND, FLxFL	
㉑	20" D.I. WALL PIPE, FLxPE	WITH THRUST COLLAR
㉒	6" D.I. CROSS, FLxFL	
㉓	8" D.I. CROSS, FLxFL	
㉔	CONCRETE PIPE SUPPORT	

NOTES:
1. PROVIDE PIPE SUPPORTS AS NECESSARY. NOT SHOWN FOR CLARITY.

VALVE SCHEDULE - STRUCTURE #10A-10C & #12			
VALVE I.D.	VALVE TYPE	VALVE SIZE	MOTORIZED
L6FPVOI	PLUG	20"	NO
L6FBVOI	BUTTERFLY	20"	YES
L7ABVOI	BUTTERFLY	18"	YES
L7AKVOI	KNIFE	24"	NO
L6GPVOI	PLUG	20"	NO
L6GBVOI	BUTTERFLY	20"	YES
L7BBVOI	BUTTERFLY	18"	YES
L7BKVOI	KNIFE	24"	NO
L6HPVOI	PLUG	20"	NO
L6HBVOI	BUTTERFLY	20"	YES
L7GBVOI	BUTTERFLY	18"	YES
L7GKVOI	KNIFE	24"	NO
10APVOI	PLUG	12"	NO
10BPVOI	PLUG	12"	NO
10CPVOI	PLUG	12"	NO
L12APVOI	PLUG	6"	YES
L12BPVOI	PLUG	6"	YES
L12CPVOI	PLUG	6"	YES
L9ABVOI	BUTTERFLY	24"	YES
L9BBVOI	BUTTERFLY	24"	YES
L9CBVOI	BUTTERFLY	24"	YES
L36AMVOI	MUD	8"	NO
L36BMVOI	MUD	8"	NO
L36CMVOI	MUD	8"	NO
L7AGVOI	GLOBE	¾"	NO
L7BGVOI	GLOBE	¾"	NO
L7CGVOI	GLOBE	¾"	NO



NOTES:

1. MJD VALVES SHALL BE FURNISHED WITH STEM, WALL ANCHORS, AND HANDWHEEL OPERATOR IN A COMPLETE SYSTEM FOR WALL MOUNTING WITH WHEEL OPERATOR AT WALKWAY LEVEL. SUBMITTAL REQUIRED.
2. ALL MOTORIZED VALVES TO BE SUPPLIED WITH HANDWHEEL OPERATORS.
3. L10APVOI, L10BPVOI, AND L10CPVOI TO BE FURNISHED WITH STEMS AND STEM SUPPORTS TO EXTEND TO THE TOP OF THE BASIN WALL PER THE MANUFACTURERS RECOMMENDATIONS.
4. GLOBE VALVES TO BE USED TO FILL SBR DECANTER TO RELEASE AIR.
5. AIR PIPING TO BE SUPPORTED TO PREVENT SLIPPAGE AND TO BE LOOSELY ATTACHED TO ALLOW PIPE MOVEMENT.
6. AIR PIPING SHALL BE GROOVED DUCTILE IRON. COMPLETE SYSTEM TO BE DESIGNED AND FURNISHED BY VICTAULIC.

WALL ENGINEERING
223 N. WASHINGTON AVE., DURANT, OK 74701
OKLAHOMA CA #5413 EXP. JUNE 30, 2023

SUBMITTAL / REVISIONS:

NO.	DATE	BY	SUBMITTAL / REVISION
	03/22	JR	ODEQ SUBMITTAL
	06/22	JR	ISSUED FOR BIDDING

SHAWNEE MUNICIPAL AUTHORITY
WASTEWATER SYSTEM IMPROVEMENTS
CONTRACT DOCUMENTS VOL. 4 OF 6 - NORTHSIDE WWTP

SEQUENCING BATCH REACTOR
ELEVATION VIEWS

PROJECT NO.
SHN-20-01
DATE
06/22
DRAWN BY:
JR
CHECKED BY:
BW
REVIEWED BY:
DBW
SCALE:
1/8"=1'-0"

BAR IS ONE INCH ON ORIGINAL DRAWING
0" 1"
IF NOT ONE INCH ON THIS SHEET, ADJUST SCALES ACCORDINGLY

SHEET
SBR-3

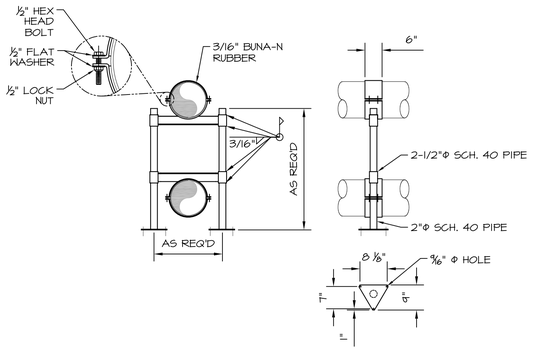

MULTI HEADER SUPPORT DETAIL

SCALE: NOT TO SCALE

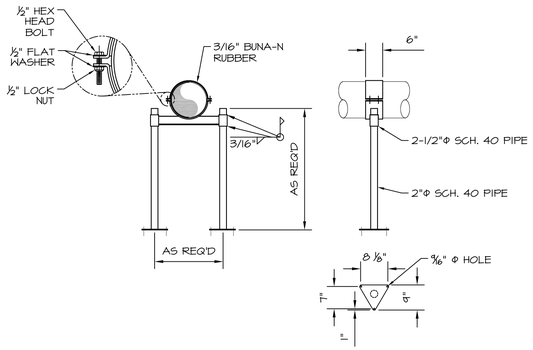

SINGLE HEADER SUPPORT DETAIL

SCALE: NOT TO SCALE

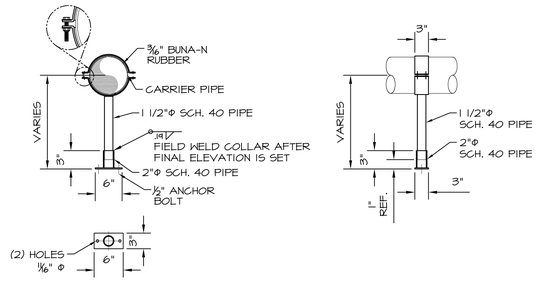

PIPE SUPPORT DETAIL

SCALE: NOT TO SCALE

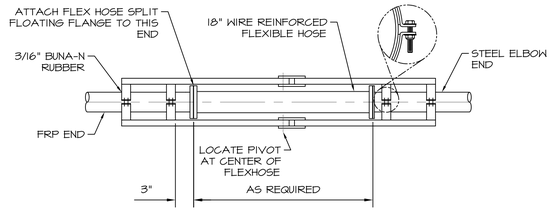

KNEE BRACE DETAIL

SCALE: NOT TO SCALE

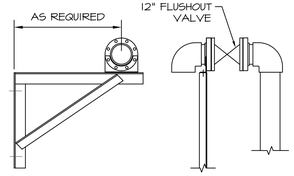

FLUSHOUT DETAIL

SCALE: NOT TO SCALE

NOTE:
CONTRACTOR TO COORDINATE WITH SUPPLIER FOR FLUSHOUT DETAIL.

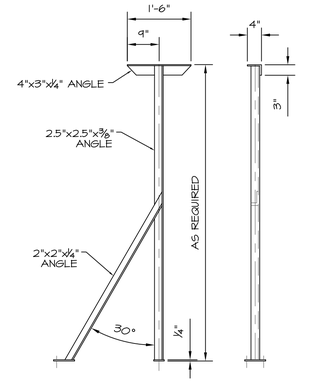

DECANTER REST SUPPORT DETAIL

SCALE: NOT TO SCALE

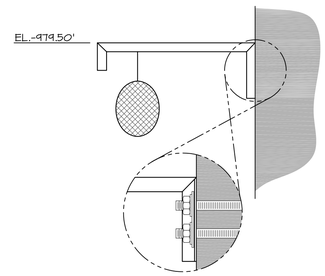

ETWL FLOAT DETAIL

SCALE: NOT TO SCALE

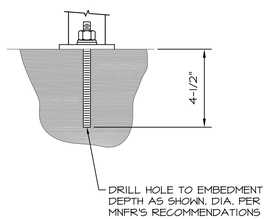

ANCHOR BOLT DETAIL

SCALE: NOT TO SCALE

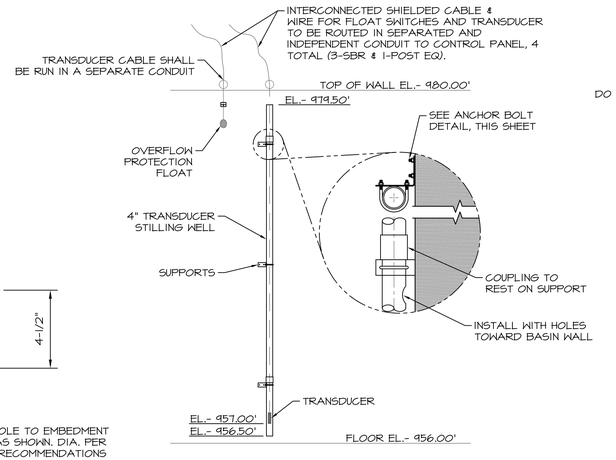

TRANSDUCER STRILLING WELL

SCALE: NOT TO SCALE

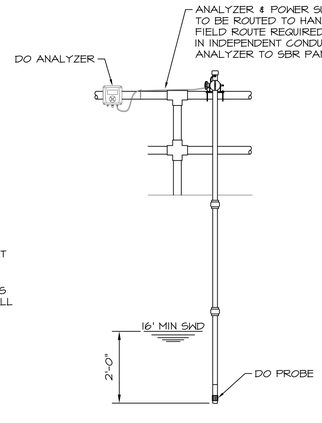

DO PROBE

SCALE: NOT TO SCALE

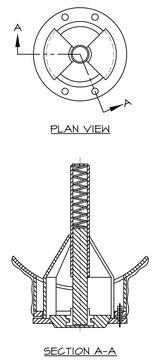

DECANTER VALVE DETAIL

SCALE: NOT TO SCALE



WALL ENGINEERING

223 N. WASHINGTON AVE. DURANT, OK 74701
OKLAHOMA CA #6413 EXP. JUNE 30, 2023

SUBMITTAL / REVISIONS:

DATE	BY	SUBMITTAL / REVISION
03/22	JR	ODEQ SUBMITTAL
06/22	JR	ISSUED FOR BIDDING

SHAWNEE MUNICIPAL AUTHORITY
WASTEWATER SYSTEM IMPROVEMENTS
CONTRACT DOCUMENTS VOL. 4 OF 6 - NORTHSIDE WWTP

MISCELLANEOUS DETAILS

PROJECT NO.
SHN-20-01

DATE
06/22

DRAWN BY:
JR

CHECKED BY:
BW

REVIEWED BY:
DBW

SCALE:
AS SHOWN

BAR IS ONE INCH ON ORIGINAL DRAWING
0" 1"
IF NOT ONE INCH ON THIS SHEET, ADJUST SCALES ACCORDINGLY

SHEET

SBR-4

NOTE:
ALL PIPING, CONNECTIONS AND MISCELLANEOUS ITEMS DETAILED SHALL BE 316 STAINLESS STEEL OR OTHER ENGINEER APPROVED CORROSION RESISTANT MATERIAL UNLESS OTHERWISE NOTED.

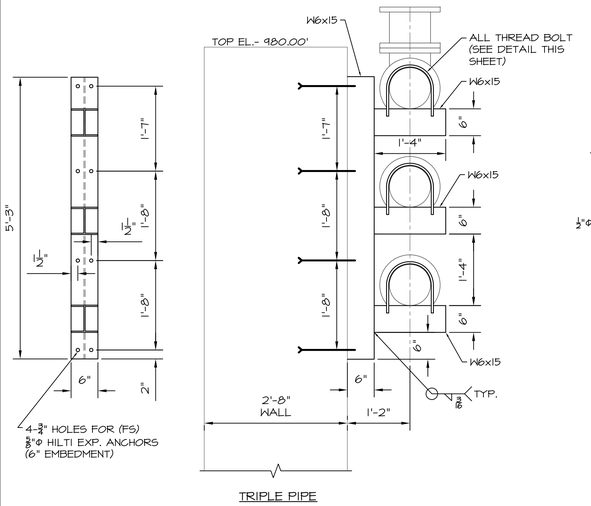

TRIPLE PIPE

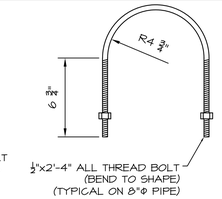

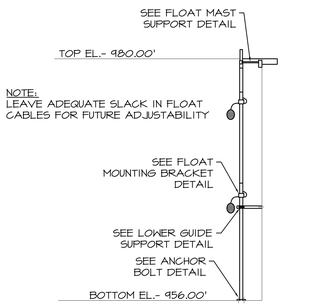

RETRIEVABLE FLOAT MAST

SCALE: NOT TO SCALE

GENERL NOTES:

1. SOCKET JOINTS SHALL BE MADE WITH THE USE OF ADHESIVE KITS FURNISHED BY SUPPLIER. FIBERGLASS PROCESS PIPING FIELD JOINTS SHALL BE PROVIDED WITH EXTRA MATERIAL TO ALLOW FOR TOLERANCES AND EXACT FIELD ALIGNMENT. TRIMMING WILL BE REQUIRED.
2. BUTT-WRAP JOINTS SHALL BE A BUTT AND STRAP CONNECTION WITH A PRESSURE RATING OF 75 PSI. MATERIALS TO MAKE EACH CONNECTION SHALL BE FURNISHED BY SUPPLIER AND SHALL INCLUDE FIBERGLASS MAT AND RESIN. THE BROWN TOP-COAT RESIN SHOULD BE APPLIES AFTER COMPLETION OF DRY INSPECTION PROCEDURES. FIBERGLASS PROCESS PIPING FIELD JOINTS SHALL BE PROVIDED WITH EXTRA MATERIAL TO ALLOW FOR TOLERANCES AND EXACT FIELD ALIGNMENT (EXCLUDING HEADER & DECANTER JOINTS).
3. FRP PIPE AND FITTINGS SHALL BE 75 PSI MIN. PRESSURE RATING. PIPE TO BE P.E.x.P.E.
4. SUPPORTS AND STEELWORK FURNISHED BY SUPPLIER SHALL BE 316 STAINLESS STEEL.
5. FLANGES FURNISHED BY SUPPLIER SHALL MEET OUTSIDE DIAMETER, BOLT CIRCLE DIAMETER, NUMBER AND SIZE OF HOLES PER ANSI B.16.1 125 LB. CAST IRON, AND ANSI B16.5 150 LB. STEEL FLANGE SPECIFICATIONS.
6. GASKETS SUPPLIED BY SUPPLIER SHALL BE 3/16" THICK, FULL FACE BUNA-N RUBBER, WITH A DUROMETER HARDNESS OF 40-50 ON THE SHORE-A SCALE.
7. SUPPORT AND CONNECTING HARDWARE FURNISHED BY SUPPLIER SHALL BE TYPE 18-8 STAINLESS STEEL. TORQUE (+0/-5%) ON STAINLESS STEEL BOLTS USED WITH METAL ASSEMBLIES SHALL BE:
   - 20 FT. LBS. FOR 3/8" BOLTS
   - 40 FT. LBS. FOR 1/2" BOLTS
   - 125 FT. LBS. FOR 3/4" BOLTS
   - 150 FT. LBS. FOR 7/8" AND LARGER BOLTS
8. ANCHOR BOLTS SHALL BE TYPE 18-8 STAINLESS STEEL. ANCHOR BOLTS SHALL BE SET TO FULL EMBEDMENT AS SHOWN IN THE ANCHOR BOLT DETAIL INTO STRUCTURAL CONCRETE UNLESS OTHERWISE NOTED. USE A LOCK WASHER UNDER THE NUT. TORQUE ON STAINLESS STEEL ANCHOR BOLTS SHALL BE:
   - 22-25 FT. LBS. FOR 1/2" BOLTS
   - 55-80 FT. LBS. FOR 5/8" BOLTS
   - 276-330 FT. LBS. FOR 1" BOLTS
9. FIBERGLASS AND PVC PIPE SHALL BE STORED WITH A MAXIMUM OF 8'-0" BETWEEN SUPPORTS.

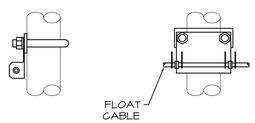

SIDE VIEW FRONT VIEW

FLOAT MOUNTING BRACKET

SCALE: NOT TO SCALE

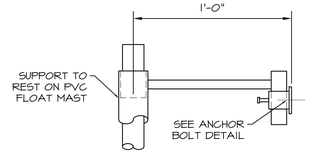

FLOAT MAST SUPPORT

SCALE: NOT TO SCALE

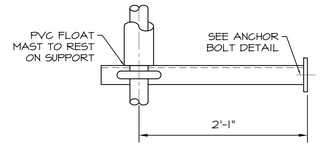

LOWER GUIDE SUPPORT

SCALE: NOT TO SCALE

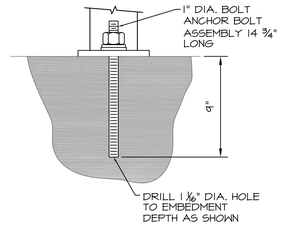

ANCHOR BOLT DETAIL

SCALE: NOT TO SCALE

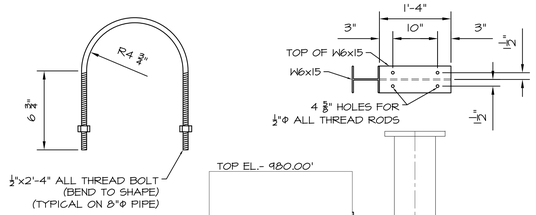

DOUBLE PIPE

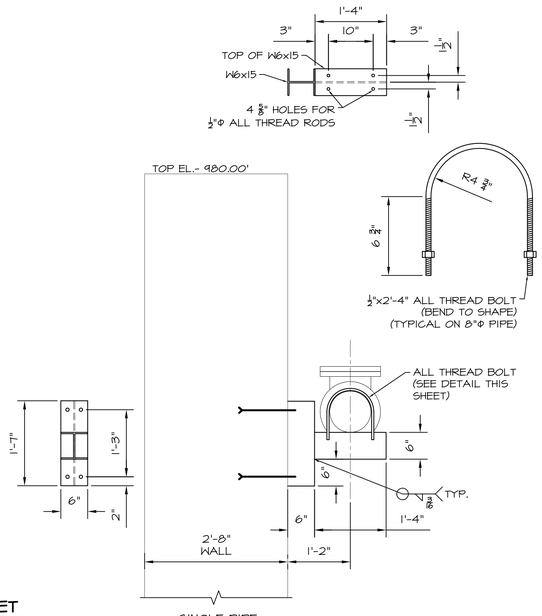

SINGLE PIPE

PIPING SUPPORT WALL BRACKET

SCALE: 3/4"=1'-0"

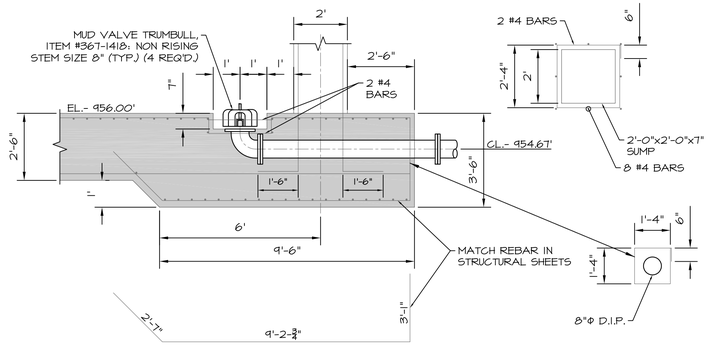

SIDE VIEW

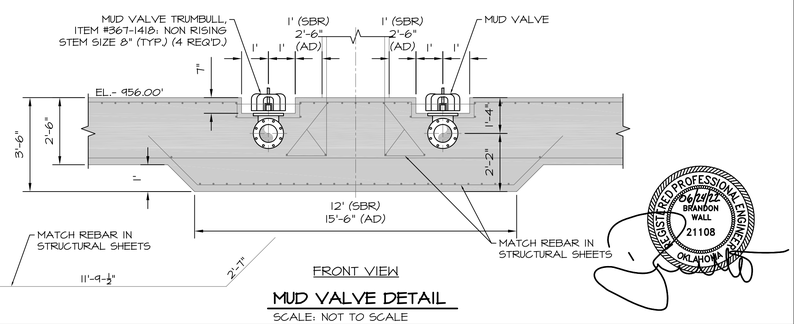

FRONT VIEW

MUD VALVE DETAIL

SCALE: NOT TO SCALE

WALL ENGINEERING
223 N. WASHINGTON AVE., DURANT, OK 74701
OKLAHOMA CA #6413 EXP. JUNE 30, 2023

SUBMITTAL / REVISIONS:

DATE	BY	SUBMITTAL / REVISION
03/22	JR	ODEQ SUBMITTAL
06/22	JR	ISSUED FOR BIDDING

SHAWNEE MUNICIPAL AUTHORITY
WASTEWATER SYSTEM IMPROVEMENTS
CONTRACT DOCUMENTS VOL. 4 OF 6 - NORTHSIDE WWTP

MISCELLANEOUS DETAILS

PROJECT NO.
SHN-20-01
DATE
06/22
DRAWN BY:
JR
CHECKED BY:
BW
REVIEWED BY:
DBW
SCALE:
AS SHOWN

BAR IS ONE INCH ON ORIGINAL DRAWING
0" 1"
IF NOT ONE INCH ON THIS SHEET, ADJUST SCALES ACCORDINGLY

SHEET
SBR-5

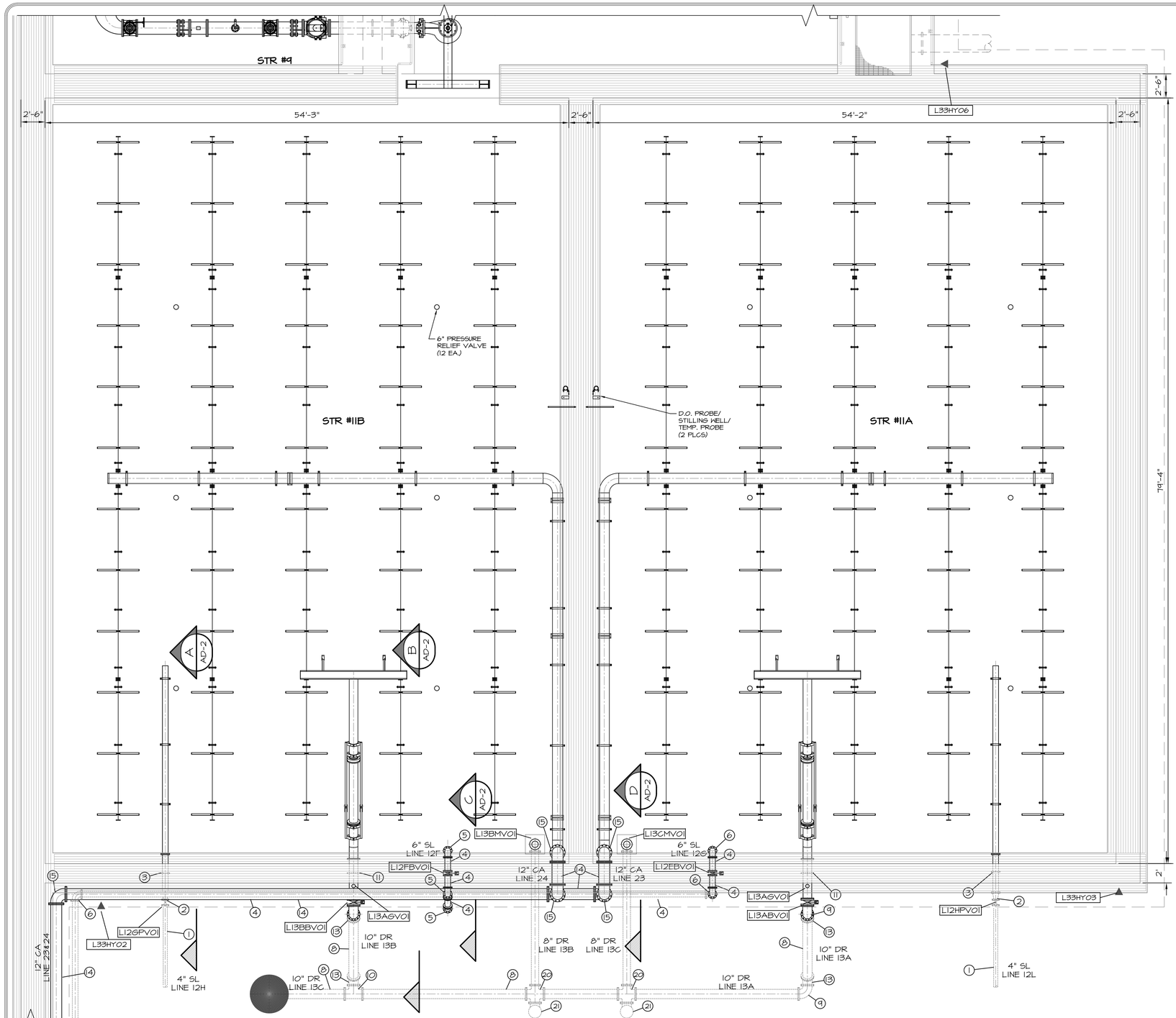

HANDRAIL/WALKWAY NOTES:

1. COMPLETE HANDRAIL SYSTEM (INCLUDING STAIRS AND PUMP MAINTENANCE PLATFORM) TO BE FURNISHED AS A SYSTEM (INCLUDING PRE-EQ BASIN) FROM A SINGLE SUPPLIER. COMPLETE SYSTEM TO BE STAMPED BY AND OKLAHOMA STRUCTURAL ENGINEER (S.E.).
2. HANDRAIL/WALKWAY SUPPLIER TO COORDINATE STAIRS/STEPS OF ADEQUATE CLEARANCE FOR LOCATIONS WHERE AIR/SLUDGE/MISC. PIPING EXTENDS OVER TOP OF WALL. SUBMITTAL REQUIRED.

NOTES:

1. ALL COMPONENTS SHALL BE DUCTILE IRON OR STAINLESS STEEL.
2. ALL ELECTRONICALLY ACTUATED VALVES TO ALSO BE EQUIPPED WITH HAND WHEEL OPERATORS.
3. PIPE SUPPORT LOCATIONS ARE FOR REFERENCE ONLY & MORE MAY BE REQUIRED PER SPECIFICATION REQUIREMENTS AND/OR INDUSTRY STANDARD.
4. ALL AERATION COMPONENTS INTERNAL TO BASINS TO BE STAINLESS STEEL. SYSTEM TO BE DESIGNED AND FURNISHED BY SUPPLIER. COORDINATE WITH SUPPLIER FOR INSTALLATION DETAILS AND CONSTRUCTION INFORMATION.
5. MUD VALVES SHALL BE FURNISHED WITH STEM, WALL ANCHORS, AND HANDWHEEL OPERATOR IN A COMPLETE SYSTEM FOR WALL MOUNTING WITH WHEEL OPERATOR AT WALKWAY LEVEL. SUBMITTAL REQUIRED.
6. GLOBE VALVES TO BE USED TO FILL SBR DECANTER TO RELEASE AIR.
7. AIR PIPING TO BE SUPPORTED TO PREVENT SLIPPAGE AND TO BE LOOSELY ATTACHED TO ALLOW PIPE MOVEMENT.

VALVE SCHEDULE - STRUCTURE #11A & #11B

VALVE I.D.	VALVE TYPE	VALVE SIZE	MOTORIZED
L12EBV01	BUTTERFLY	6"	YES
L12FBV01	BUTTERFLY	6"	YES
L12GPV01	PLUG	4"	YES
L12HPV01	PLUG	4"	YES
L13ABV01	PLUG	10"	YES
L13AGV01	GLOBE	¾"	NO
L13BBV01	PLUG	10"	YES
L13BGV01	GLOBE	¾"	NO
L13BMV01	MUD	8"	NO
L13CMV01	MUD	8"	NO

PIPING SCHEDULE STRUCTURE #11A & #11B

NO.	ITEM	DESCRIPTION/NOTES
1	4" D.I. SPOOL, FLxPE	
2	4"x6" D.I. ECCENTRIC REDUCER, FLxFL	ECCENTRIC
3	6" D.I. WALL PIPE, FLxPE	WITH THRUST COLLAR
4	6" D.I. SPOOL, FLxFL	
5	6" D.I. 45° BEND, FLxFL	
6	6" D.I. 90° BEND, FLxFL	
7	6" D.I. TEE, FLxFL	
8	10" D.I. SPOOL, FLxFL	
9	10" D.I. 90° BEND, FLxFL	
10	10" D.I. TEE, FLxFL	
11	10" D.I. WALL PIPE, FLxPE	WITH THRUST COLLAR
12	10" D.I. SPOOL, FLxPE	
13	10" D.I. 45° BEND, FLxFL	
14	12" D.I. SPOOL, GRxGR	SEE NOTE 6 (SBR-3)
15	12" D.I. 90° BEND, GRxGR	SEE NOTE 6 (SBR-3)
16	12" EXPANSION JOINT	
17	ADJUSTABLE PIPE SUPPORT/STAND	
18	CONCRETE CRADLE PIPE SUPPORT	
19	12" SST DROP PIPE	COORDINATE WITH SUPPLIER
20	10x10x10x8" D.I. CROSS, FLxFL	
21	CLEANOUT	SEE DETAIL SHEETS

REGISTERED PROFESSIONAL ENGINEER
06/27/22
BRANDON WALL
21108
OKLAHOMA

WALL ENGINEERING
223 N. WASHINGTON AVE., DURANT, OK 74701
OKLAHOMA CA #5413 EXP. JUNE 30, 2023

SUBMITTAL / REVISIONS:

DATE	BY	SUBMITTAL / REVISION
03/22	JR	ODEQ SUBMITTAL
05/22	JR	REVISED PER ODEQ COMMENT
06/22	JR	ISSUED FOR BIDDING

SHAWNEE MUNICIPAL AUTHORITY
WASTEWATER SYSTEM IMPROVEMENTS - NORTHSIDE WWTP
CONTRACT DOCUMENTS VOL. 4 OF 6

AEROBIC DIGESTER
PLAN VIEW AND SCHEDULES

PROJECT NO.
SHN-20-01
DATE
06/22
DRAWN BY:
JR
CHECKED BY:
BW
REVIEWED BY:
DBW
SCALE:
3/16"=1'-0"

BAR IS ONE INCH ON ORIGINAL DRAWING
0" 1"
IF NOT ONE INCH ON THIS SHEET, ADJUST SCALES ACCORDINGLY

SHEET
AD-1

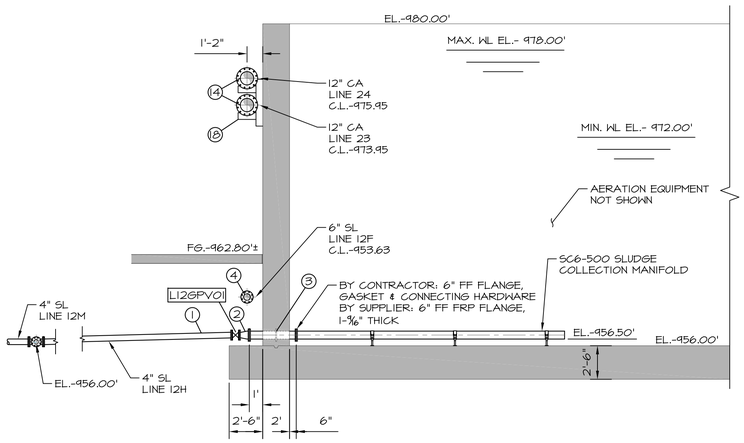

A AD-1 **SECTION**
SCALE: 3/16"=1'-0"

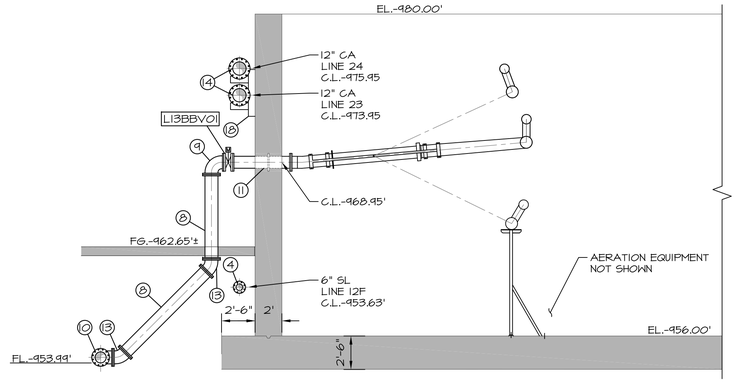

B AD-1 **SECTION**
SCALE: 3/16"=1'-0"

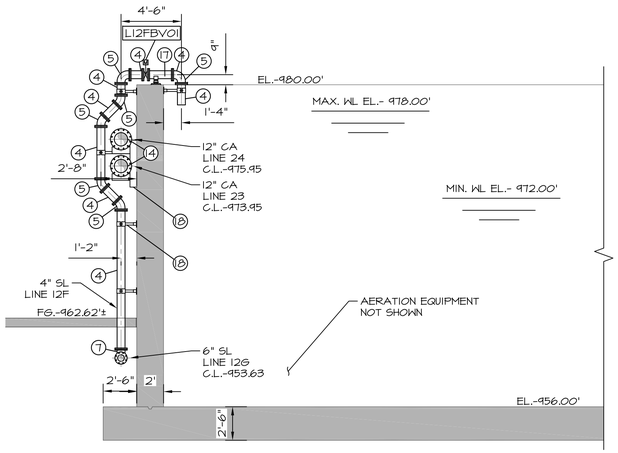

C AD-1 **SECTION**
SCALE: 3/16"=1'-0"

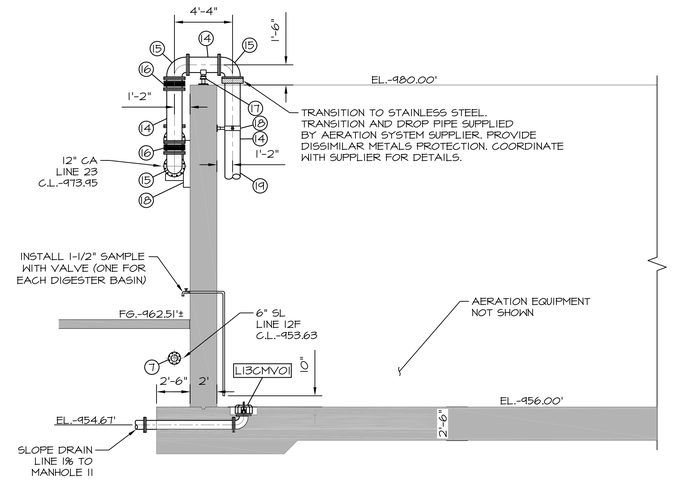

D AD-1 **SECTION**
SCALE: 3/16"=1'-0"

NOTES:

1. CONTRACTOR NEEDS TO PROVIDE A ¾" NIPPLE AND GLOBE VALVE BETWEEN OUTSIDE OF DECANTER SPOOL PENETRATION AND EFFLUENT CONTROL VALVE TO SERVE AS A FILL PORT TO SINK DECANTER AT START-UP.
2. DECANTER OUTLET PIPING MUST BE DESIGNED WITH A SUBMERGED OUTLET OR TRAPS TO PREVENT AIR FROM ENTERING THE DECANTER.
3. ALL PIPE ELEVATIONS SHOWN ARE CENTER OF PIPE UNLESS OTHERWISE INDICATED.
4. ALL FRP PIPE AND FITTINGS SHALL BE 75 PSI MIN. PRESSURE RATING.
5. ALL FLANGES FURNISHED BY SUPPLIER SHALL MEET OUTSIDE DIAMETER, BOLT CIRCLE DIAMETER, NUMBER AND SIZE OF HOLES PER ANSI B.16.1 125 LB. CAST IRON, AND ANSI B16.5 150 LB. STEEL FLANGE SPECIFICATIONS.
6. GASKETS PROVIDED BY SUPPLIER SHALL BE 3/16" THICK, FULL FACE BUNA-N RUBBER, WITH A DUROMETER HARDNESS OF 40-50 ON THE SHORE-A SCALE.

NOTES:

1. ALL COMPONENTS SHALL BE DUCTILE IRON OR STAINLESS STEEL.
2. ALL ELECTRONICALLY ACTUATED VALVES TO ALSO BE EQUIPPED WITH HAND WHEEL OPERATORS.
3. PIPE SUPPORT LOCATIONS ARE FOR REFERENCE ONLY & MORE MAY BE REQUIRED PER SPECIFICATION REQUIREMENTS AND/OR INDUSTRY STANDARD.
4. ALL AERATION COMPONENTS INTERNAL TO BASINS TO BE STAINLESS STEEL. SYSTEM TO BE DESIGNED AND FURNISHED BY SUPPLIER. COORDINATE WITH SUPPLIER FOR INSTALLATION DETAILS AND CONSTRUCTION INFORMATION.
5. MUD VALVES SHALL BE FURNISHED WITH STEM, WALL ANCHORS, AND HANDWHEEL OPERATOR IN A COMPLETE SYSTEM FOR WALL MOUNTING WITH WHEEL OPERATOR AT WALKWAY LEVEL. SUBMITTAL REQUIRED.
6. GLOBE VALVES TO BE USED TO FILL SBR DECANTER TO RELEASE AIR.
7. AIR PIPING TO BE SUPPORTED TO PREVENT SLIPPAGE AND TO BE LOOSELY ATTACHED TO ALLOW PIPE MOVEMENT.

VALVE SCHEDULE - STRUCTURE #11A & #11B

VALVE I.D.	VALVE TYPE	VALVE SIZE	MOTORIZED
L12EBVO1	BUTTERFLY	6"	YES
L12FBVO1	BUTTERFLY	6"	YES
L12GPVO1	PLUG	4"	YES
L12HPVO1	PLUG	4"	YES
L13ABVO1	PLUG	10"	YES
L13AGVO1	GLOBE	¾"	NO
L13BBVO1	PLUG	10"	YES
L13BGVO1	GLOBE	¾"	NO
L13BMVO1	MUD	8"	NO
L13CMVO1	MUD	8"	NO

PIPING SCHEDULE STRUCTURE #11A & #11B

NO.	ITEM	DESCRIPTION/NOTES
1	4" D.I. SPOOL, FLxPE	
2	4"x6" D.I. ECCENTRIC REDUCER, FLxFL	ECCENTRIC
3	6" D.I. WALL PIPE, FLxPE	WITH THRUST COLLAR
4	6" D.I. SPOOL, FLxFL	
5	6" D.I. 45° BEND, FLxFL	
6	6" D.I. 90° BEND, FLxFL	
7	6" D.I. TEE, FLxFL	
8	10" D.I. SPOOL, FLxFL	
9	10" D.I. 90° BEND, FLxFL	
10	10" D.I. TEE, FLxFL	
11	10" D.I. WALL PIPE, FLxPE	WITH THRUST COLLAR
12	10" D.I. SPOOL, FLxPE	
13	10" D.I. 45° BEND, FLxFL	
14	12" D.I. SPOOL, GRxGR	SEE NOTE 6 (SBR-3)
15	12" D.I. 90° BEND, GRxGR	SEE NOTE 6 (SBR-3)
16	12" EXPANSION JOINT	
17	ADJUSTABLE PIPE SUPPORT/STAND	
18	CONCRETE CRADLE PIPE SUPPORT	
19	12" SST DROP PIPE	COORDINATE WITH SUPPLIER
20	10x10x10x8" D.I. CROSS, FLxFL	
21	CLEANOUT	SEE DETAIL SHEETS



WALL ENGINEERING
223 N. WASHINGTON AVE., DURANT, OK 74701
OKLAHOMA CA #5413 EXP. JUNE 30, 2023

SUBMITTAL / REVISIONS:

DATE	BY	SUBMITTAL / REVISION
03/22	JR	ODEQ SUBMITTAL
05/22	JR	REVISED PER ODEQ COMMENT
06/22	JR	ISSUED FOR BIDDING

SHAWNEE MUNICIPAL AUTHORITY
WASTEWATER SYSTEM IMPROVEMENTS
CONTRACT DOCUMENTS VOL. 4 OF 6 - NORTHSIDE WWTP

AEROBIC DIGESTER
SECTION VIEWS AND SCHEDULES

PROJECT NO.
SHN-20-01
DATE
06/22
DRAWN BY:
JR
CHECKED BY:
BW
REVIEWED BY:
DBW
SCALE:
3/16"=1'-0"

BAR IS ONE INCH ON ORIGINAL DRAWING
0" 1"
IF NOT ONE INCH ON THIS SHEET, ADJUST SCALES ACCORDINGLY

SHEET
AD-2

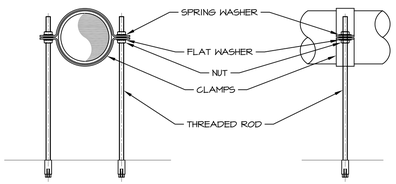

SUPPORTS DETAILS
SCALE: NOT TO SCALE

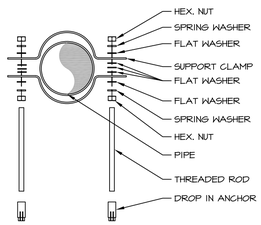

GUIDE SUPPORT EXPLODED VIEW
SCALE: NOT TO SCALE

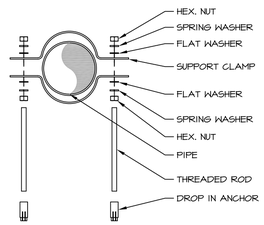

FIXED SUPPORT EXPLODED VIEW
SCALE: NOT TO SCALE

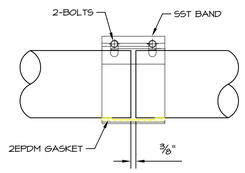

SST COUPLING DETAILS
SCALE: NOT TO SCALE

NOTES:
1. GUIDE SUPPORTS WITH 3 EXTRA WASHERS PLACE BETWEEN THE CLAMPS SO THAT THERE IS GAP BETWEEN THE O.D. OF THE PIPE AND I.D. OF THE CLAMP FOR PIPE EXPANSION.
2. FIXED SUPPORTS ARE WITH CLAMPS (STRAPS) GRIPPED TIGHT TO THE O.D. OF THE PIPE WHICH DO NOT ALLOW PIPE FOR EXPANSION.

NOTES:
1. ALL COMPONENTS SHALL BE DUCTILE IRON OR STAINLESS STEEL.
2. ALL ELECTRONICALLY ACTUATED VALVES TO ALSO BE EQUIPPED WITH HAND WHEEL OPERATORS.
3. PIPE SUPPORT LOCATIONS ARE FOR REFERENCE ONLY & MORE MAY BE REQUIRED PER SPECIFICATION REQUIREMENTS AND/OR INDUSTRY STANDARD.
4. ALL AERATION COMPONENTS INTERNAL TO BASINS TO BE STAINLESS STEEL. SYSTEM TO BE DESIGNED AND FURNISHED BY SUPPLIER. COORDINATE WITH SUPPLIER FOR INSTALLATION DETAILS AND CONSTRUCTION INFORMATION.
5. MUD VALVES SHALL BE FURNISHED WITH STEM, WALL ANCHORS, AND HANDWHEEL OPERATOR IN A COMPLETE SYSTEM FOR WALL MOUNTING WITH WHEEL OPERATOR AT WALKWAY LEVEL. SUBMITTAL REQUIRED.
6. GLOBE VALVES TO BE USED TO FILL SBR DECANTER TO RELEASE AIR.
7. AIR PIPING TO BE SUPPORTED TO PREVENT SLIPPAGE AND TO BE LOOSELY ATTACHED TO ALLOW PIPE MOVEMENT.

VALVE SCHEDULE - STRUCTURE #11A & #11B

VALVE I.D.	VALVE TYPE	VALVE SIZE	MOTORIZED
L12EBV01	BUTTERFLY	6"	YES
L12FBV01	BUTTERFLY	6"	YES
L12GPV01	PLUG	4"	YES
L12HPV01	PLUG	4"	YES
L13ABV01	PLUG	10"	YES
L13AGV01	GLOBE	¾"	NO
L13BBV01	PLUG	10"	YES
L13BGV01	GLOBE	¾"	NO
L13BMV01	MUD	8"	NO
L13CMV01	MUD	8"	NO

PIPING SCHEDULE STRUCTURE #11A & #11B

NO.	ITEM	DESCRIPTION/NOTES
1	4" D.I. SPOOL, FLxPE	
2	4"x6" D.I. ECCENTRIC REDUCER, FLxFL	ECCENTRIC
3	6" D.I. WALL PIPE, FLxPE	WITH THRUST COLLAR
4	6" D.I. SPOOL, FLxFL	
5	6" D.I. 45° BEND, FLxFL	
6	6" D.I. 90° BEND, FLxFL	
7	6" D.I. TEE, FLxFL	
8	10" D.I. SPOOL, FLxFL	
9	10" D.I. 90° BEND, FLxFL	
10	10" D.I. TEE, FLxFL	
11	10" D.I. WALL PIPE, FLxPE	WITH THRUST COLLAR
12	10" D.I. SPOOL, FLxPE	
13	10" D.I. 45° BEND, FLxFL	
14	12" D.I. SPOOL, GRxGR	SEE NOTE 6 (SBR-3)
15	12" D.I. 90° BEND, GRxGR	SEE NOTE 6 (SBR-3)
16	12" EXPANSION JOINT	
17	ADJUSTABLE PIPE SUPPORT/STAND	
18	CONCRETE CRADLE PIPE SUPPORT	
19	12" SST DROP PIPE	COORDINATE WITH SUPPLIER
20	10x10x10x8" D.I. CROSS, FLxFL	
21	CLEANOUT	SEE DETAIL SHEETS

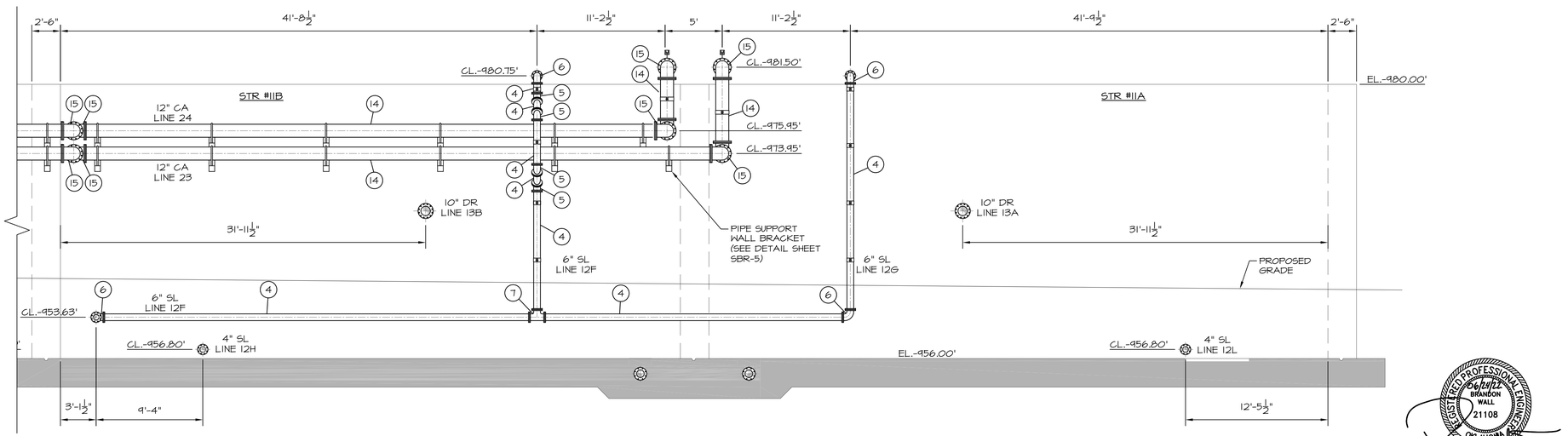

SOUTH ELEVATION VIEW
SCALE: 3/16"=1'-0"

WALL ENGINEERING
223 N. WASHINGTON AVE. DURANT, OK 74701
OKLAHOMA CA #5413 EXP. JUNE 30, 2023

SUBMITTAL / REVISIONS:

DATE	BY	SUBMITTAL / REVISION
03/22	JR	ODEQ SUBMITTAL
06/22	JR	ISSUED FOR BIDDING

SHAWNEE MUNICIPAL AUTHORITY
WASTEWATER SYSTEM IMPROVEMENTS
CONTRACT DOCUMENTS VOL. 4 OF 6 - NORTHSIDE WWTP

AEROBIC DIGESTER
ELEVATION VIEW, SCHEDULES

PROJECT NO. SHN-20-01
DATE 06/22
DRAWN BY: JR
CHECKED BY: BW
REVIEWED BY: DBW
SCALE: 3/16"=1'-0"

BAR IS ONE INCH ON ORIGINAL DRAWING
0" 1"
IF NOT ONE INCH ON THIS SHEET, ADJUST SCALES ACCORDINGLY

SHEET
AD-3

PIPING AND EQUIPMENT SCHEDULE - STRUCTURES #15 & #16

NO.	ITEM	DESCRIPTION / NOTES
1	6"x3" D.I. ECCENTRIC REDUCER	SEE NOTE 2
2	6" D.I. SPOOL	SEE NOTE 2
3	6" D.I. 90° BEND	SEE NOTE 2
4	6" D.I. WALL PIPE	WITH THRUST COLLAR, SEE NOTE 2
5	6" D.I. DISMANTLING JOINT	SEE NOTE 2
6	6" D.I. TEE	SEE NOTE 2
7	6" D.I. SPOOL	SEE NOTE 2
8	24" D.I. WALL PIPE, FLxPE	WITH THRUST COLLAR
9	48" D.I. WALL PIPE, FLxPE	WITH THRUST COLLAR
10	U.V. LAMP MODULES W/BANK FRAME	TROJAN SIGNA
11	LEVEL CONTROL WEIR (BY U.V. SUPPLIER)	
12	POWER DISTRIBUTION CENTER (1)	
13	HYDRAULIC SYSTEM CENTER (1)	
14	SYSTEM CONTROL CENTER (1)	
15	LOW LEVEL SENSOR (1)	
16	LEVEL SENSOR CONTROL (1)	
17	6" FLANGED GLOBE CHECK VALVE	
18	6" FLANGED BUTTERFLY VALVE	
19	6" FLANGED PLUG VALVE W/ADJUSTABLE VALVE BOX	VALVE BOX CAP TO BE FLUSH WITH FLOOR
20	1" AIR RELEASE VALVE	ROUTE DISCHARGE IN PVC TO GRATING
21	6" BASKET STRAINER (SEE NOTES THIS SHEET)	EATON MODEL 72 OR EQUAL
22	ADJUSTABLE PIPE SUPPORTS	

(1)- CONTRACTOR TO FURNISH SUBMITTAL DRAWING WITH EXACT LOCATION & LAYOUT INCLUDING WIRE ROUTING. INSTALLATION SHALL BE PER MANUFACTURERS REQUIREMENTS.
(2)-ALL ABOVE GROUND NON POTABLE WATER PIPING TO BE GROOVED END AND DESIGNED AND FURNISHED AS A SYSTEM BY VICTAULIC.

316L SS GATE SCHEDULE STRUCTURE #15 & #16

GATE IDENTIFICATION	15SL01	15SL02	15SL03	15SL04	15SL05	15SL06
GATE TYPE	SLUICE	SLUICE	SLUICE	SLUICE	SLUICE	SLUICE
GATE SIZE	2'-11¼" X 72"	2'-11¼" X 72"	4'-6" X 72"	24"Φ	24"Φ	24"Φ
GATE SERIES	924	924	924	924	924	924
MOUNTING - FRAME	CW / FE	CW	CW	CW	CW	CW
MOUNTING - INVERT	WALL	EMBEDED	EMBEDED	WALL	WALL	WALL
A. MANUAL	HC	HC	HC	HC	HC	HC
B. ELECTRIC*	YES	YES	YES	YES	YES	YES
C. STEM COVER	CLEAR POLY	CLEAR POLY	CLEAR POLY	CLEAR POLY	CLEAR POLY	CLEAR POLY
D. POSITION COVER	MYLAR	MYLAR	MYLAR	MYLAR	MYLAR	MYLAR
E. STEM CONFIGURATION	RISING	RISING	RISING	RISING	RISING	RISING
LIFT MOUNTING	YOKE	YOKE	YOKE	YOKE	YOKE	YOKE
LEAKAGE STANDARD	AWWA	AWWA	AWWA	AWWA	AWWA	AWWA
OPERATING FLOOR ELEV.	965.25'	965.25'	965.25'	965.25'	965.25'	965.25'
INVERT ELEV.	956.33'	951.33'	951.33'	951.33	951.33	951.33

1. ALL GATES ARE UPWARD OPENING UNLESS OTHERWISE SPECIFIED.
2. ELECTRICALLY OPERATED GATE. 460 VOLTS/3 PHASE.
3. SEE HN-5 FOR GATE DETAIL AND COORDINATE W/MANUFACTURER FOR ADDITIONAL INFORMATION.

NON-POTABLE WATER PUMP SCHEDULE - STRUCTURE #16

NO.	FLOW	TDH-DES	FUNCTION	CONTROL	HP
16P101-16P102	400 GPM	235'	PRIMARY	VFD	±40

PUMP NOTES:

1. PUMP SHALL BE GORMAN RUPP T3AS-E5 SELF PRIMING PUMP.
2. 4" SIMPLEX STRAINER SHALL BE EATON MODEL 72 OR APPROVED EQUAL AND SHALL HAVE PIPE SUPPORTS UNDER THE PROCESS PIPING NEAR THE INLET AND OUTLET CONNECTIONS (SEE PIPE SUPPORT DETAIL SHEET DT-03).
3. STRAINER DRAIN SHALL BE FIELD ROUTED INTO BASIN THROUGH APPROPRIATELY SIZED SCH. 80 PVC CONDUIT PER MANUFACTURES REQUIREMENTS.
4. GRATING OVER UV CHANNELS SHALL BE SIZED TO BE EASILY REMOVED BY ONE PERSON.
5. INVERT MOUNTING PER GATE MANUFACTURER REQUIREMENTS/RECOMMENDATIONS SUBMITTAL REQUIRED.
6. COORDINATE WITH PUMP SUPPLIER FOR CONCRETE PENETRATION REQUIREMENTS.

UV NOTES:

1. UV CHANNEL TO HAVE HIGH LEVEL ALARM.
2. SUBMIT WIRING PLAN TO ENGINEER FOR APPROVAL PRIOR TO STARTING WORK.
3. COORDINATE WITH UV SUPPLIER FOR EXACT WIRING AND EQUIPMENT REQUIREMENTS PRIOR TO BID.
4. EQUIPMENT LOCATION IS FOR REFERENCE ONLY. PROVIDE EQUIPMENT LAYOUT TO ENGINEER FOR APPROVAL PRIOR TO CONSTRUCTION.
5. DO NOT SLOPE CHANNEL FLOOR.
6. CHANNEL WIDTH MUST BE KEPT WITHIN A TOLERANCE OF ± 1-1/2" AT UV BANK FRAME AND ±¼" FOR REST OF CHANNEL.
7. ALL CHANNEL ELEVATIONS MUST BE KEPT WITHIN A TOLERANCE OF ± ¼".
8. REMOVABLE GRATING SECTIONS SHALL BE EASILY REMOVED BY ONE PERSON. MAXIMUM WEIGHT OF THE SECTIONS SHALL BE IN ACCORDANCE WITH REQUIREMENTS OF THE APPLICABLE JURISDICTION.
9. CONTRACTOR TO REVIEW ALL TROJAN TECHNOLOGIES INSTALLATION INSTRUCTIONS PRIOR TO EQUIPMENT INSTALLATION.
10. HYDRAULIC HOSE ELEVATIONS NOT TO EXCEED 12" ABOVE HSC MOUNTING ELEVATION.
11. SOLID GRATING REQUIRED TO BLOCK ULTRAVIOLET (UV) LIGHT. IN AREAS SPECIFIED.
12. COORDINATE EXACT DIMENSIONS WITH SUBMITTAL DRAWING.
13. HOUSE KEEPING PADS REQUIRED FOR ALL EQUIPMENT.
14. DURING NORMAL OPERATIONS IF HIGH LEVEL ALARM IS INDICATED, INFLUENT GATES SHOULD CLOSE AND/OR BYPASS GATES OPEN.

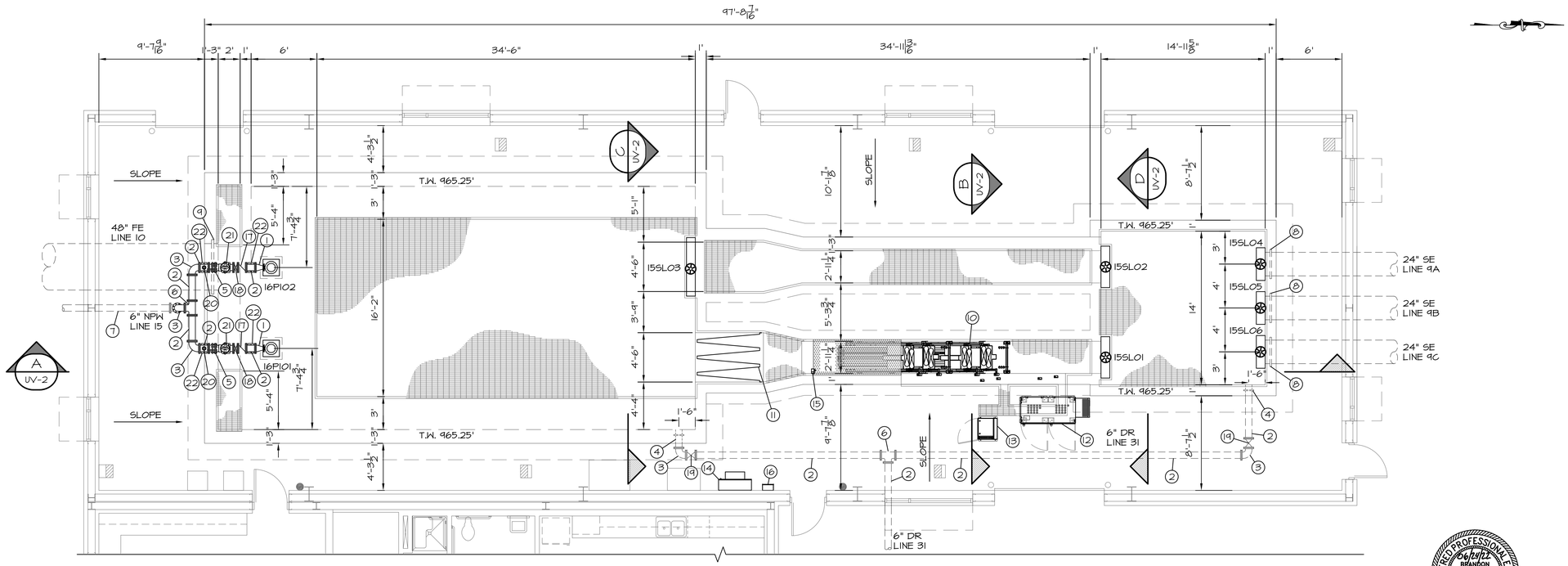

NOTE:
CONCRETE TO SLOPE CONTINUOUS FROM EXTERIOR FINISH FLOOR ELEVATION OF 965.33 TO TOP OF WALL ELEVATION OF 965.25 TO FACILITATE DRAINAGE.

WALL ENGINEERING
223 N. WASHINGTON AVE. DURANT, OK 74701
OKLAHOMA CA #6413 EXP. JUNE 30, 2023

SUBMITTAL / REVISIONS:

DATE	BY	SUBMITTAL / REVISION
03/22	JR	ODEQ SUBMITTAL
06/22	JR	ISSUED FOR BIDDING

SHAWNEE MUNICIPAL AUTHORITY
WASTEWATER SYSTEM IMPROVEMENTS
CONTRACT DOCUMENTS VOL. 4 OF 6 - NORTHSIDE WWTP

ULTRAVIOLET DISINFECTION SYSTEM
PLAN VIEW AND SCHEDULES

PROJECT NO.
SHN-20-01
DATE
06/22
DRAWN BY:
JR
CHECKED BY:
BW
REVIEWED BY:
DBW
SCALE:
3/16"=1'-0"

BAR IS ONE INCH ON ORIGINAL DRAWING
0" 1"
IF NOT ONE INCH ON THIS SHEET, ADJUST SCALES ACCORDINGLY

SHEET
UV-1

REGISTERED PROFESSIONAL ENGINEER
06/21/22
BRANDON WALL
21108
OKLAHOMA

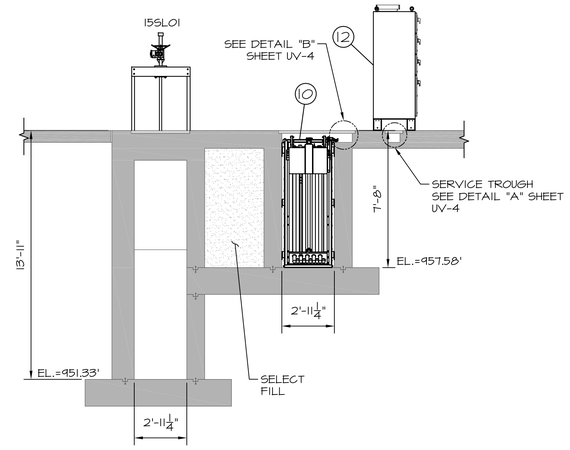

B UV-1 **SECTION**
SCALE: 1/4"=1'-0"

NOTE:
CABLE MANAGEMENT BRACKETS, LAMP CABLES, HYDRAULIC HOSES AND REMOVABLE GRATING NOT SHOWN FOR CLARITY.

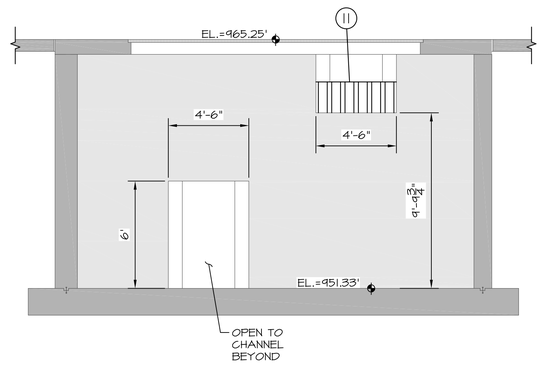

C UV-1 **SECTION**
SCALE: 1/4"=1'-0"

NOTE:
GATES NOT SHOWN FOR CLARITY.

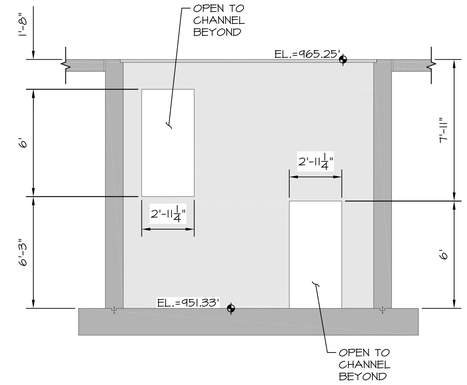

D UV-1 **SECTION**
SCALE: 1/4"=1'-0"

NOTE:
GATES NOT SHOWN FOR CLARITY.

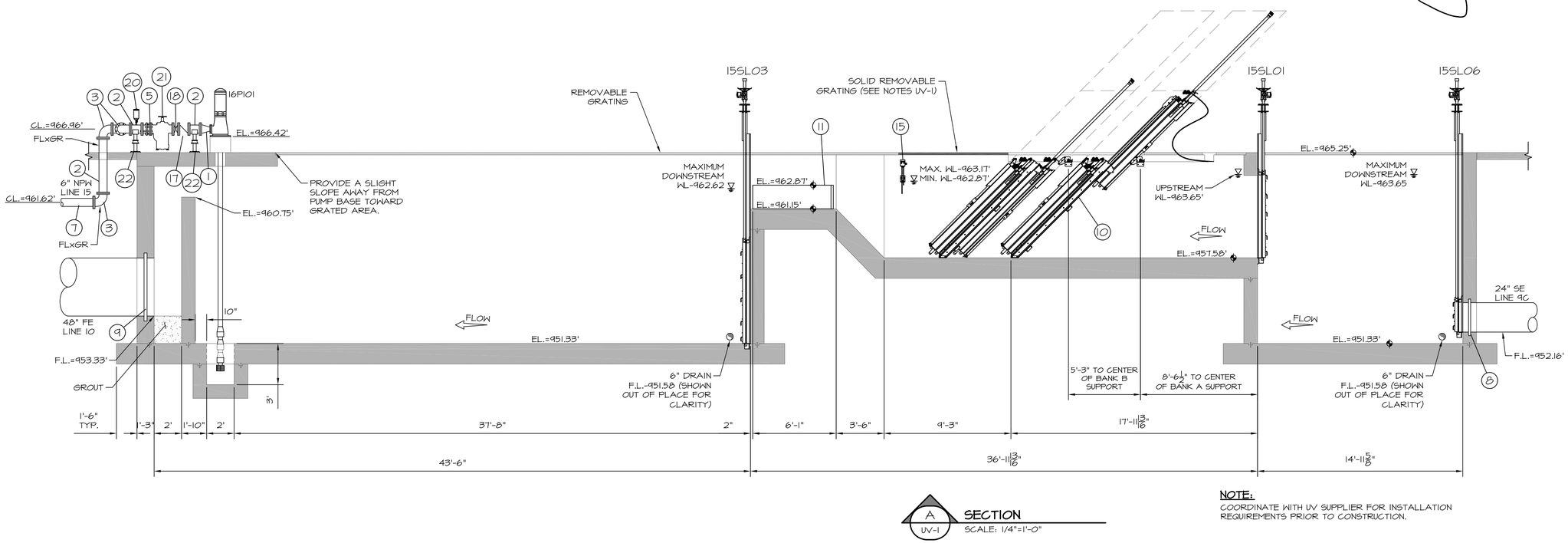

A UV-1 **SECTION**
SCALE: 1/4"=1'-0"

NOTE:
COORDINATE WITH UV SUPPLIER FOR INSTALLATION REQUIREMENTS PRIOR TO CONSTRUCTION.

WALL ENGINEERING
223 N. WASHINGTON AVE., DURANT, OK 74701
OKLAHOMA CA #6413 EXP. JUNE 30, 2023

SUBMITTAL / REVISIONS:

DATE	BY	SUBMITTAL / REVISION
03/22	JR	ODEQ SUBMITTAL
06/22	JR	ISSUED FOR BIDDING

SHAWNEE MUNICIPAL AUTHORITY
WASTEWATER SYSTEM IMPROVEMENTS
CONTRACT DOCUMENTS VOL. 4 OF 6 - NORTHSIDE WWTP

ULTRAVIOLET DISINFECTION SYSTEM
SECTION VIEWS

REGISTERED PROFESSIONAL ENGINEER
6/24/22
BRANDON WALL
21108
OKLAHOMA

PROJECT NO.	SHN-20-01
DATE	06/22
DRAWN BY:	JR
CHECKED BY:	BW
REVIEWED BY:	DBW
SCALE:	1/4"=1'-0"

BAR IS ONE INCH ON ORIGINAL DRAWING
0" 1"
IF NOT ONE INCH ON THIS SHEET, ADJUST SCALES ACCORDINGLY

SHEET
UV-2

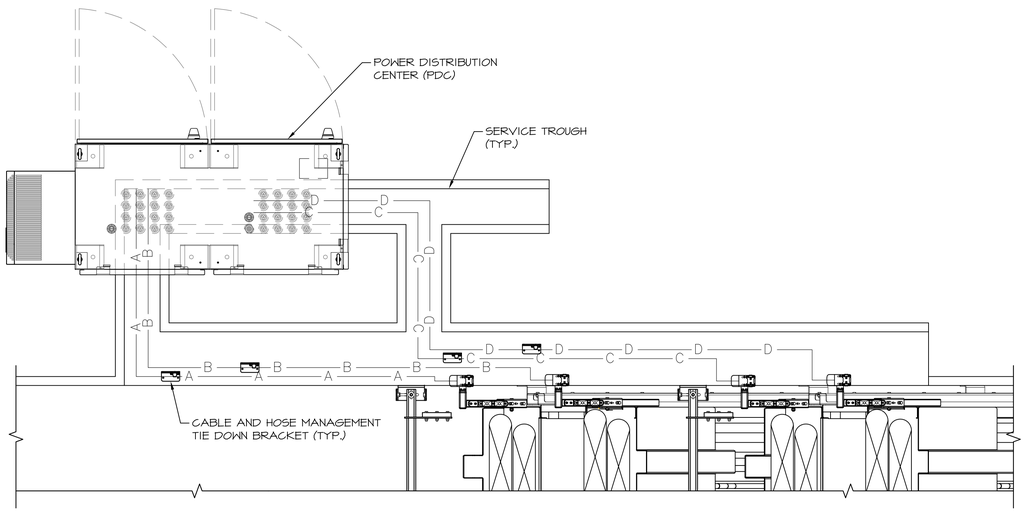

LAMP CABLE ROUTING PLAN

SCALE: NOT TO SCALE

NOTE:

HSC NOT SHOWN FOR CLARITY.

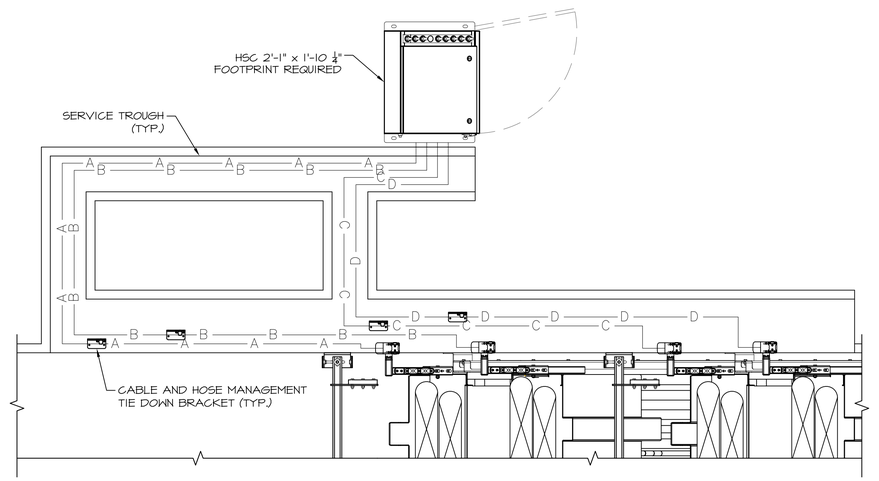

HYDRAULIC HOSE ROUTING PLAN

SCALE: NOT TO SCALE

NOTE:

PDC NOT SHOWN FOR CLARITY.

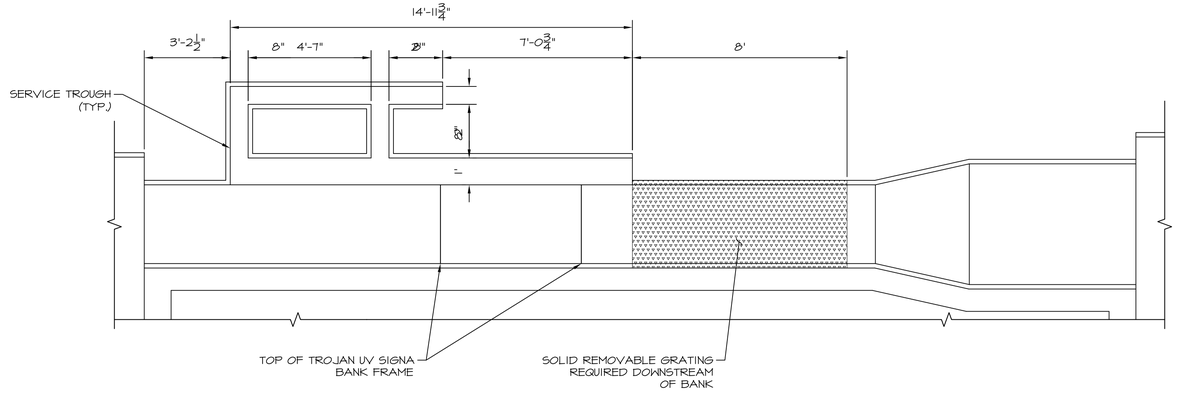

GRATING AND TROUGH DETAIL

SCALE: NOT TO SCALE

NOTE:

DESIGN OF GRATING SECTION SHOULD BE SIZED TO ALLOW FOR EASY REMOVAL BY SERVICING TECHNICIANS. SOLID GRATING MUST BE PROVIDED IN AREA INDICATED TO BLOCK UV LIGHT.

REGISTERED PROFESSIONAL ENGINEER
06/21/22
BRANDON WALL
21108
OKLAHOMA

WALL ENGINEERING
223 N. WASHINGTON AVE., DURANT, OK 74701
OKLAHOMA CA #5413 EXP. JUNE 30, 2023

SUBMITTAL / REVISIONS:

DATE	BY	SUBMITTAL / REVISION
03/22	JR	ODEQ SUBMITTAL
06/22	JR	ISSUED FOR BIDDING

SHAWNEE MUNICIPAL AUTHORITY
WASTEWATER SYSTEM IMPROVEMENTS
CONTRACT DOCUMENTS VOL. 4 OF 6 - NORTHSIDE WWTP

ULTRAVIOLET DISINFECTION SYSTEM
ELECTRICAL ROUTING PLAN

PROJECT NO.	SHN-20-01
DATE	06/22
DRAWN BY:	JR
CHECKED BY:	BW
REVIEWED BY:	DBW
SCALE:	NOT TO SCALE

BAR IS ONE INCH ON ORIGINAL DRAWING
0" 1"
IF NOT ONE INCH ON THIS SHEET, ADJUST SCALES ACCORDINGLY

SHEET

UV-3

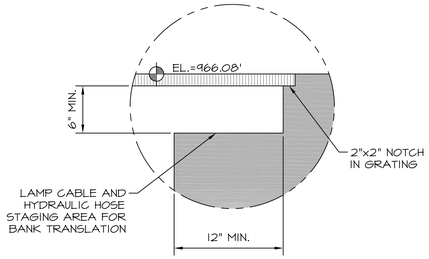

DETAIL B

SCALE: NOT TO SCALE

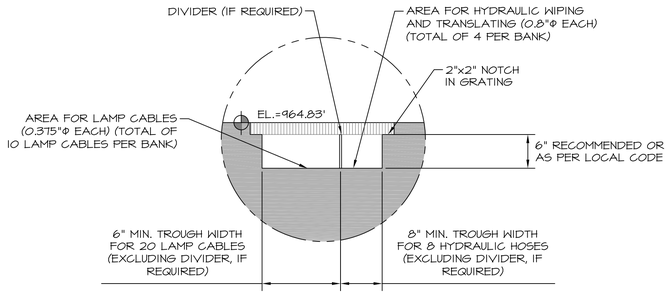

DETAIL A

SCALE: NOT TO SCALE

NOTE:
REFER TO MANUFACTURER TROUGH CABLE INSTALLATION GUIDELINE OR LOCAL CODE IF MORE RESTRICTIVE. TROUGH WIDTHS BASED ON SOLID STYLE GRATING.

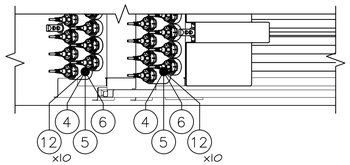

UV BANK INTERCONNECT DETAIL

SCALE: NOT TO SCALE

NOTE:
TYPICAL FOR ALL UV BANKS. TROUGH NOT SHOWN FOR CLARITY.

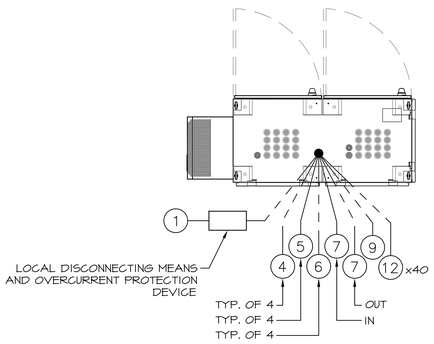

PDC INTERCONNECT DETAIL

SCALE: NOT TO SCALE

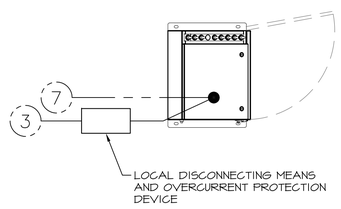

HSC INTERCONNECT DETAIL

SCALE: NOT TO SCALE

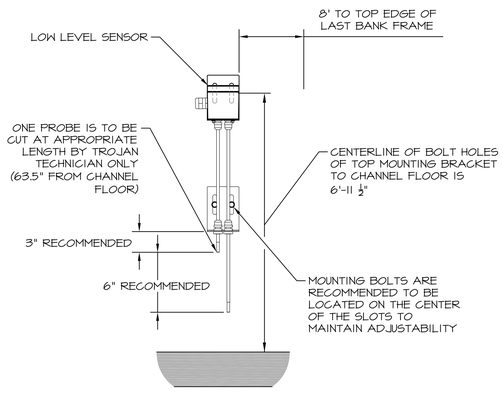

LOW LEVEL SENSOR

SCALE: NOT TO SCALE



WALL ENGINEERING
223 N. WASHINGTON AVE. DURANT, OK 74701
OKLAHOMA CA #5413 EXP. JUNE 30, 2023

SUBMITTAL / REVISIONS:

DATE	BY	SUBMITTAL / REVISION
03/22	JR	ODEQ SUBMITTAL
06/22	JR	ISSUED FOR BIDDING

SHAWNEE MUNICIPAL AUTHORITY
WASTEWATER SYSTEM IMPROVEMENTS
CONTRACT DOCUMENTS VOL. 4 OF 6 - NORTHSIDE WWTP

ULTRAVIOLET DISINFECTION SYSTEM
MISCELLANEOUS DETAILS

PROJECT NO.	SHN-20-01
DATE	06/22
DRAWN BY:	JR
CHECKED BY:	BW
REVIEWED BY:	DBW
SCALE:	AS SHOWN

BAR IS ONE INCH ON ORIGINAL DRAWING
0" 1"
IF NOT ONE INCH ON THIS SHEET, ADJUST SCALES ACCORDINGLY

SHEET

UV-4

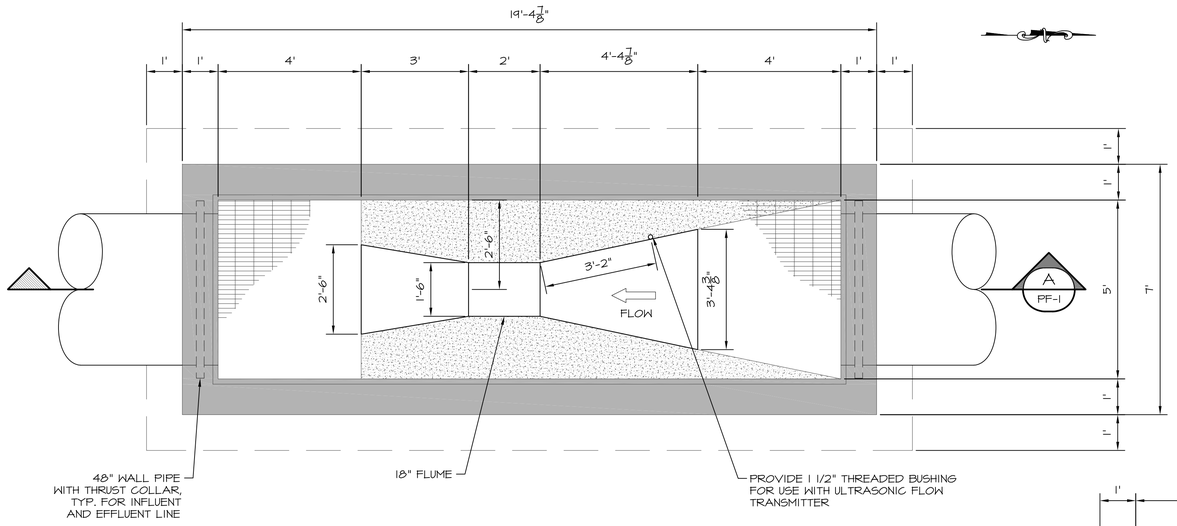

EFFLUENT PARSHALL FLUME MECHANICAL PLAN VIEW

SCALE: 1/2"=1'0"

NOTE:
PARSHALL FLUME MUST BE EQUIPPED WITH AN AFFIXED STAFF GAUGE TO MEASURE THE LIQUID LEVEL AND PLACED AT THE PROPER HEAD MEASUREMENT LOCATION.

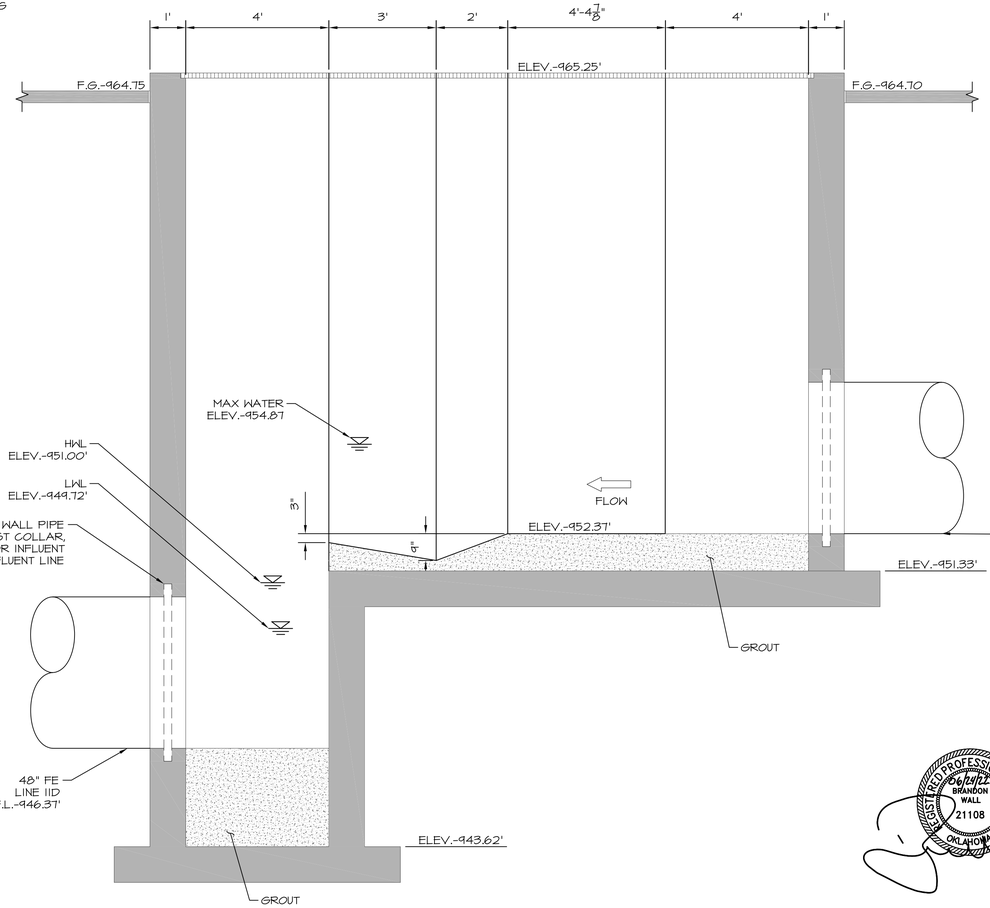

A / PF-1 SECTION

SCALE: 1/2"=1'-0"

NOTE:

1. VERIFY EXACT DIMENSIONS OF 12" PARSHALL FLUME PRIOR TO CONSTRUCTING BASIN.
2. INSTALL ULTRASONIC LEVEL SENSOR IN ACCORDANCE W/FLUM MANUFACTURER RECOMMENDATIONS.
3. USE S.S. STRUT FOR SENSOR INSTALLATION RACK. MOUNT FLOW DISPLAY ON EAST SIDE OF FLUME, FACING SOUTH, 4' ABOVE NATURAL GROUND.

WALL ENGINEERING
223 N. WASHINGTON AVE. DURANT, OK 74701
OKLAHOMA CA #5413 EXP. JUNE 30, 2023

SUBMITTAL / REVISIONS:

DATE	BY	SUBMITTAL / REVISION
03/22	JR	ODEQ SUBMITTAL
06/22	JR	ISSUED FOR BIDDING

SHAWNEE MUNICIPAL AUTHORITY
WASTEWATER SYSTEM IMPROVEMENTS
CONTRACT DOCUMENTS VOL. 4 OF 6 - NORTHSIDE WWTP

EFFLUENT PARSHALL FLUME
MECHANICAL PLAN AND SECTION

PROJECT NO.
SHN-20-01

DATE
06/22

DRAWN BY:
JR

CHECKED BY:
BW

REVIEWED BY:
DBW

SCALE:
1/2"=1'-0"

BAR IS ONE INCH ON ORIGINAL DRAWING
0" 1"
IF NOT ONE INCH ON THIS SHEET, ADJUST SCALES ACCORDINGLY

SHEET
PF-1

REGISTERED PROFESSIONAL ENGINEER
BRANDON WALL
21108
OKLAHOMA

VALVE SCHEDULE STRUCTURE #24			
VALVE I.D.	VALVE TYPE	VALVE SIZE	MOTORIZED
L11AGV01	CHECK	14"	NA
L11APV01	PLUG	14"	YES
L11AAR01	COMBINATION AIR	2"	NA
L11BGV01	CHECK	14"	NA
L11BPV01	PLUG	14"	YES
L11BAR01	COMBINATION AIR	2"	NA
L11CGV01	CHECK	14"	NA
L11CPV01	PLUG	14"	YES
L11CAR01	COMBINATION AIR	2"	NA
L11DAV01	COMBINATION AIR	2"	NA
L11EPV01	PLUG	6"	NO
L11EPV02	PLUG	6"	NO

NOTES:
1. ROUTE AIR/VAC DRAWS TO FLOOR DRAIN IN PVC.
2. AIR RELEASE VALVES TO BE SUPPLIED WITH ISOLATION BALL VALVE & ½" SAMPLE COCK.

PIPING SCHEDULE STRUCTURE #24		
NO.	ITEM	DESCRIPTION/NOTES
1	14" D.I. SPOOL, FLxFL	
2	14" D.I. 90° BEND, FLxFL	WITH RESTRAINED GLAND
3	14" D.I. DISMANTLING JOINT, FLxFL	
4	14" WALL PIPE, FLxPE	WITH THRUST COLLAR
5	30"x30"x14" DI TEE, FLxFL	
6	30" D.I. SPOOL, FLxFL	
7	30" D.I. BLIND FLANGE, FL	
8	30" D.I. SPOOL, FLxPE	
9	6" D.I. WALL PIPE, FLxPE	WITH THRUST COLLAR
10	30" WALL PIPE, FLxMJ	WITH THRUST COLLAR
11	3" PVC CHECK VALVE	
12	3" SCH. 80 PVC	IN 4" D.I. WALL SLEEVE
13	3" SHC. 80 PVC 90° BEND	
14	FLOOR DRAIN	NEENAH MODEL R-4937-A
15	PIPE SUPPORT	
16	48" WALL PIPE, FLxPE	
17	6" D.I. 90° BEND, FLxFL	
18	PIPE SUPPORT	
19	6" D.I. SPOOL, FLxFL	

PUMP SCHEDULE STRUCTURE #24						
NO.	FLOW	TDH-DES	FUNCTION	CONTROL	HP	EFFICIENCY MIN.
24P101-24104	6000 GPM	30'	PRIMARY	VFD	75	77%

PUMP NOTES:
1. PUMPS SHALL FENTAIR OR APPROVED EQUAL.
2. PUMPS SHALL BE PROVIDED WITH BASE ELBOWS, S.S. RAILS, AND S.S. LIFTING CHAINS.
3. PROVIDE FITTINGS AS REQUIRED TO CONNECT BASE ELBOWS TO LIFT STATION PIPING.
4. EACH PUMP SHALL BE EQUIPPED WITH A VARIABLE FREQUENCY DRIVE.
5. HOLD CONDUIT TIGHT TO BOTTOM OF WET WELL SLAB. ONE CONDUIT FOR EACH POWER CABLE, ONE FOR FLOAT SWITCHES.
6. SEAL CONDUITS TO KEEP WET WELL GASSES OUT OF CONTROL PANEL.
7. LOCATED FLOATS AND CABLE HOLDER AWAY FROM INLET PIPE.
8. ALL COMPONENTS SUBJECT TO CONTACT WITH WASTEWATER SHALL BE DUCTILE IRON OR STAINLESS STEEL.
9. SEE SHEET HW-5 FOR GATE DETAIL.
10. PIPE SUPPORT LOCATIONS ARE FOR REFERENCE ONLY & MORE MAY BE REQUIRED PRE SPECIFICATIONS AND/OR INDUSTRY STANDARD.
11. WETWELL TO BE EQUIPPED WITH A LEVEL TRANSDUCER AND 3 BACKUP FLOATS (LOW LEVEL, ALARM, INFLUENT CLOSE).

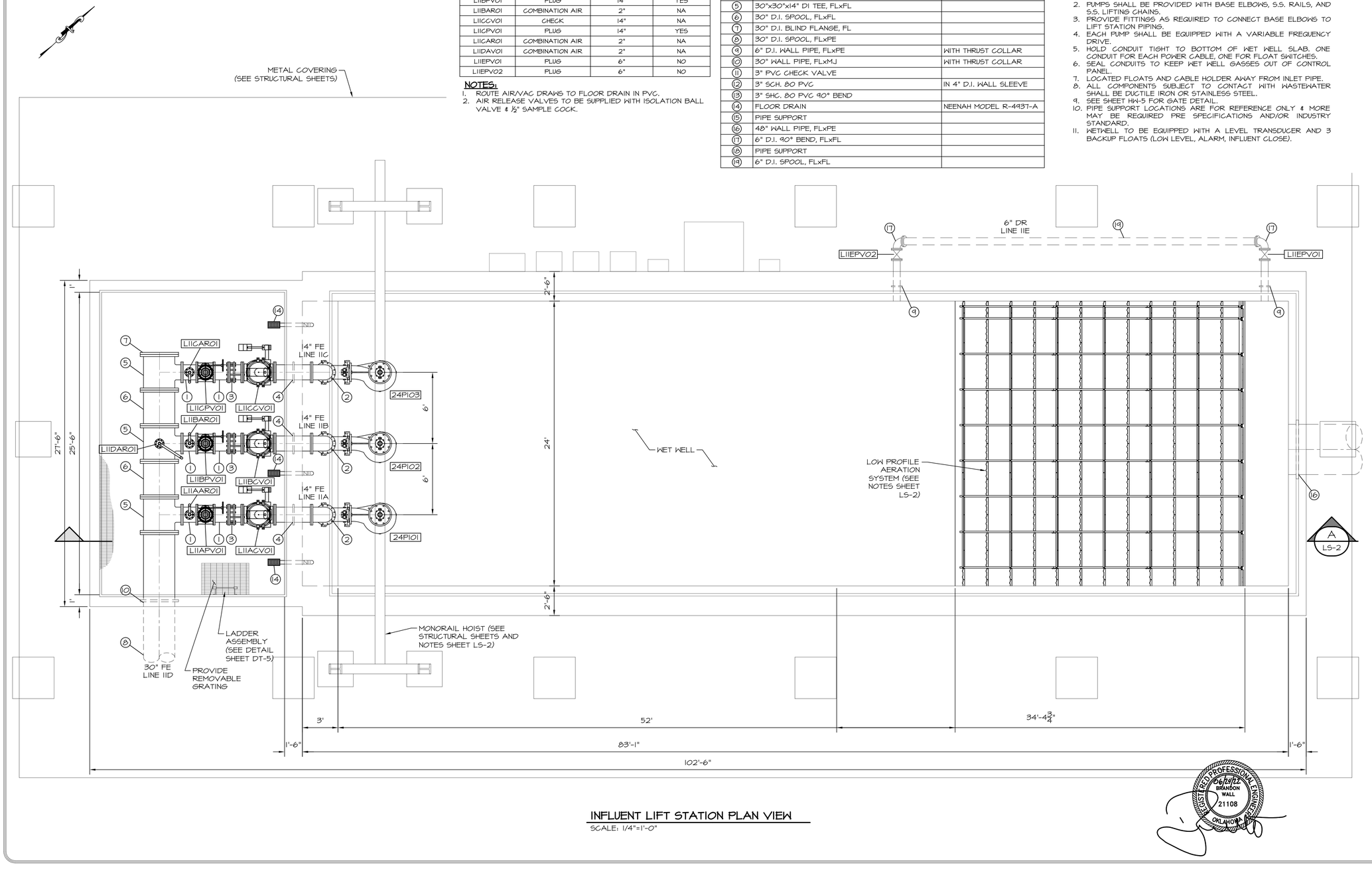

INFLUENT LIFT STATION PLAN VIEW
SCALE: 1/4"=1'-0"

WALL ENGINEERING
223 N. WASHINGTON AVE., DURANT, OK 74701
OKLAHOMA CA #6413 EXP. JUNE 30, 2023

SUBMITTAL / REVISIONS:

DATE	BY	SUBMITTAL / REVISION
03/22	JR	ODEQ SUBMITTAL
06/22	JR	ISSUED FOR BIDDING

SHAWNEE MUNICIPAL AUTHORITY
WASTEWATER SYSTEM IMPROVEMENTS
CONTRACT DOCUMENTS VOL. 4 OF 6 - NORTHSIDE WWTP

EFFLUENT LIFT STATION
MECHANICAL PLAN AND SCHEDULES

PROJECT NO.	SHN-20-01
DATE	06/22
DRAWN BY:	TL
CHECKED BY:	JR
REVIEWED BY:	DBW
SCALE:	1/4"=1'-0"

BAR IS ONE INCH ON ORIGINAL DRAWING
0" 1"
IF NOT ONE INCH ON THIS SHEET, ADJUST SCALES ACCORDINGLY

SHEET
LS-1

REGISTERED PROFESSIONAL ENGINEER
06/14/22
BRANDON WALL
21108
OKLAHOMA

LOW PROFILE AERATION SYSTEM NOTES:

1. MATERIALS OF CONSTRUCTION TO BE T-304 STAINLESS STEEL.
2. SLOPE OF CONCRETE FLOOR AND LEVEL OF CONCRETE FLOOR ACROSS WIDTH OF BASIN IS CRITICAL TO PROPER SYSTEM PERFORMANCE.
3. CONCRETE SURFACE TO BE FLAT AND SMOOTH (¼" IN 10' IN ALL DIRECTIONS), AND IS CRITICAL FOR PROPER SEALING.
4. PLACE SEAL MATERIAL BETWEEN MATING STEEL AND CONCRETE SURFACES BEFORE ANCHORAGE. COORDINATE WITH MANUFACTURER.
5. PROVIDE SEALING AND EQUIPMENT INSTALLATION PLAN TO ENGINEER AND MANUFACTURER FOR APPROVAL PRIOR TO CONSTRUCTION.

HOIST NOTES:

1. PROVIDE MOTORIZED TROLLEY HOIST CAPABLE OF LIFTING SUBMERSIBLE PUMPS FROM WET WELL FOR MAINTENANCE AND REPAIR.
2. HOIST SUPPLIER SHALL INSPECT AND CERTIFY HOIST INSTALLATION MEETS MINIMUM STANDARDS AND IS APPROPRIATE FOR THIS APPLICATION.

VALVE SCHEDULE STRUCTURE #24

VALVE I.D.	VALVE TYPE	VALVE SIZE	MOTORIZED
L11AGV01	CHECK	14"	NA
L11APV01	PLUG	14"	YES
L11AAR01	COMBINATION AIR	2"	NA
L11BCV01	CHECK	14"	NA
L11BPV01	PLUG	14"	YES
L11BAR01	COMBINATION AIR	2"	NA
L11CCV01	CHECK	14"	NA
L11CPV01	PLUG	14"	YES
L11CAR01	COMBINATION AIR	2"	NA
L11DAV01	COMBINATION AIR	2"	NA
L11EPV01	PLUG	6"	NO
L11EPV02	PLUG	6"	NO

NOTES:

1. ROUTE AIR/VAC DRAWS TO FLOOR DRAIN IN PVC.
2. AIR RELEASE VALVES TO BE SUPPLIED WITH ISOLATION BALL VALVE & ½" SAMPLE COCK.

PIPING SCHEDULE STRUCTURE #24

NO.	ITEM	DESCRIPTION/NOTES
①	14" D.I. SPOOL, FLxFL	
②	14" D.I. 90° BEND, FLxFL	WITH RESTRAINED GLAND
③	14" D.I. DISMANTLING JOINT, FLxFL	
④	14" WALL PIPE, FLxPE	WITH THRUST COLLAR
⑤	30"x30"x14" DI TEE, FLxFL	
⑥	30" D.I. SPOOL, FLxFL	
⑦	30" D.I. BLIND FLANGE, FL	
⑧	30" D.I. SPOOL, FLxPE	
⑨	6" D.I. WALL PIPE, FLxPE	WITH THRUST COLLAR
⑩	30" WALL PIPE, FLxMJ	WITH THRUST COLLAR
⑪	3" PVC CHECK VALVE	
⑫	3" SCH. 80 PVC	IN 4" D.I. WALL SLEEVE
⑬	3" SHC. 80 PVC 90° BEND	
⑭	FLOOR DRAIN	NEENAH MODEL R-4937-A
⑮	PIPE SUPPORT	
⑯	48" WALL PIPE, FLxPE	
⑰	6" D.I. 90° BEND, FLxFL	
⑱	PIPE SUPPORT	
⑲	6" D.I. SPOOL, FLxFL	

PUMP SCHEDULE STRUCTURE #24

NO.	FLOW	TDH-DES	FUNCTION	CONTROL	HP	EFFICIENCY MIN.
24P101-24104	6000 GPM	30'	PRIMARY	VFD	75	77%

PUMP NOTES:

1. PUMPS SHALL FENTAIR OR APPROVED EQUAL.
2. PUMPS SHALL BE PROVIDED WITH BASE ELBOWS, S.S. RAILS, AND S.S. LIFTING CHAINS.
3. PROVIDE FITTINGS AS REQUIRED TO CONNECT BASE ELBOWS TO LIFT STATION PIPING.
4. EACH PUMP SHALL BE EQUIPPED WITH A VARIABLE FREQUENCY DRIVE.
5. HOLD CONDUIT TIGHT TO BOTTOM OF WET WELL SLAB. ONE CONDUIT FOR EACH POWER CABLE, ONE FOR FLOAT SWITCHES.
6. SEAL CONDUITS TO KEEP WET WELL GASSES OUT OF CONTROL PANEL.
7. LOCATED FLOATS AND CABLE HOLDER AWAY FROM INLET PIPE.
8. ALL COMPONENTS SUBJECT TO CONTACT WITH WASTEWATER SHALL BE DUCTILE IRON OR STAINLESS STEEL.
9. SEE SHEET HW-5 FOR GATE DETAIL.
10. PIPE SUPPORT LOCATIONS ARE FOR REFERENCE ONLY & MORE MAY BE REQUIRED PRE SPECIFICATIONS AND/OR INDUSTRY STANDARD.
11. WETWELL TO BE EQUIPPED WITH A LEVEL TRANSDUCER AND 3 BACKUP FLOATS (LOW LEVEL, ALARM, INFLUENT CLOSE).



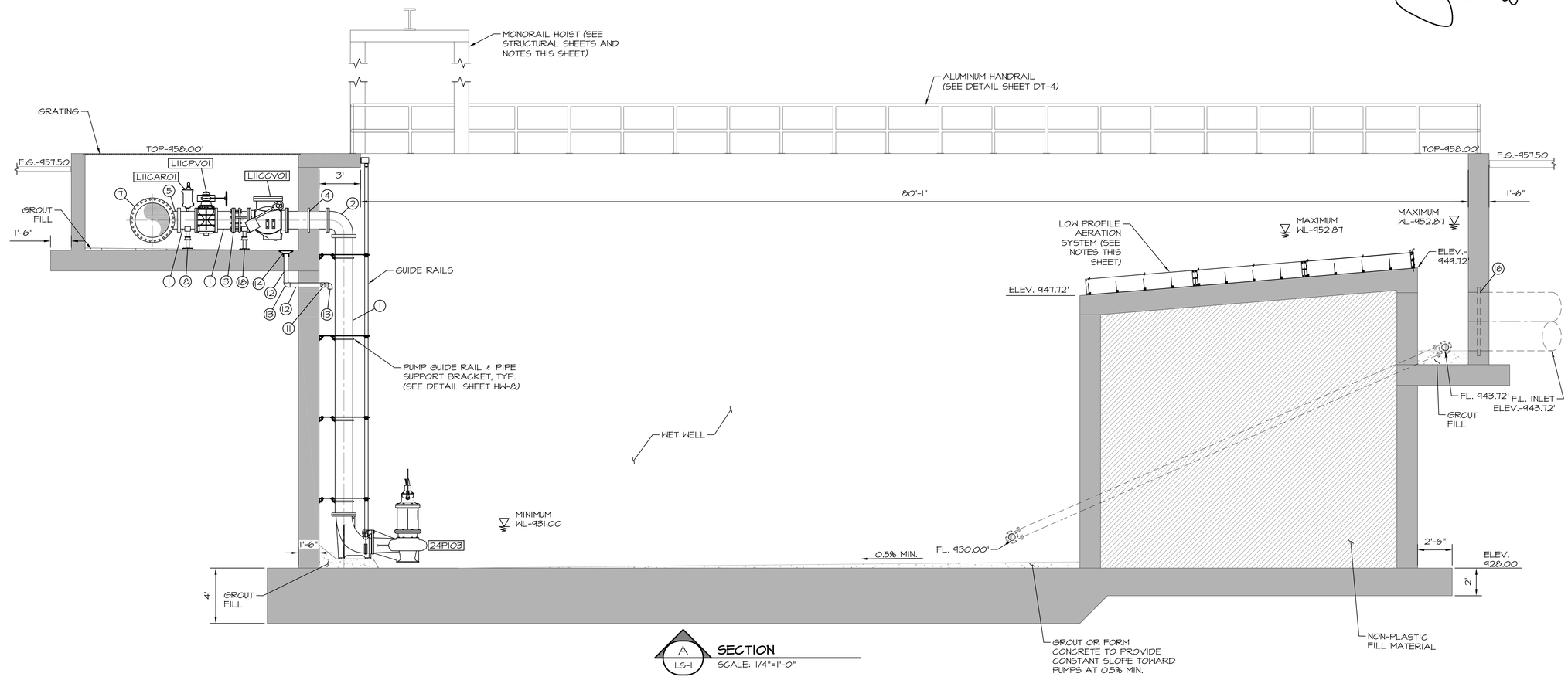

A / LS-1 **SECTION**
SCALE: 1/4"=1'-0"

WALL ENGINEERING
223 N. WASHINGTON AVE., DURANT, OK 74701
OKLAHOMA CA #5413 EXP. JUNE 30, 2023

SUBMITTAL / REVISIONS:

DATE	BY	SUBMITTAL / REVISION
03/22	JR	ODEQ SUBMITTAL
06/22	JR	ISSUED FOR BIDDING

SHAWNEE MUNICIPAL AUTHORITY
WASTEWATER SYSTEM IMPROVEMENTS
CONTRACT DOCUMENTS VOL. 4 OF 6 - NORTHSIDE WWTP

EFFLUENT LIFT STATION
MECHANICAL SECTION AND SCHEDULES

PROJECT NO.
SHN-20-01
DATE
06/22
DRAWN BY:
TL
CHECKED BY:
JR
REVIEWED BY:
DBW
SCALE:
1/4"=1'-0"

BAR IS ONE INCH ON ORIGINAL DRAWING
0" 1"
IF NOT ONE INCH ON THIS SHEET, ADJUST SCALES ACCORDINGLY

SHEET
LS-2

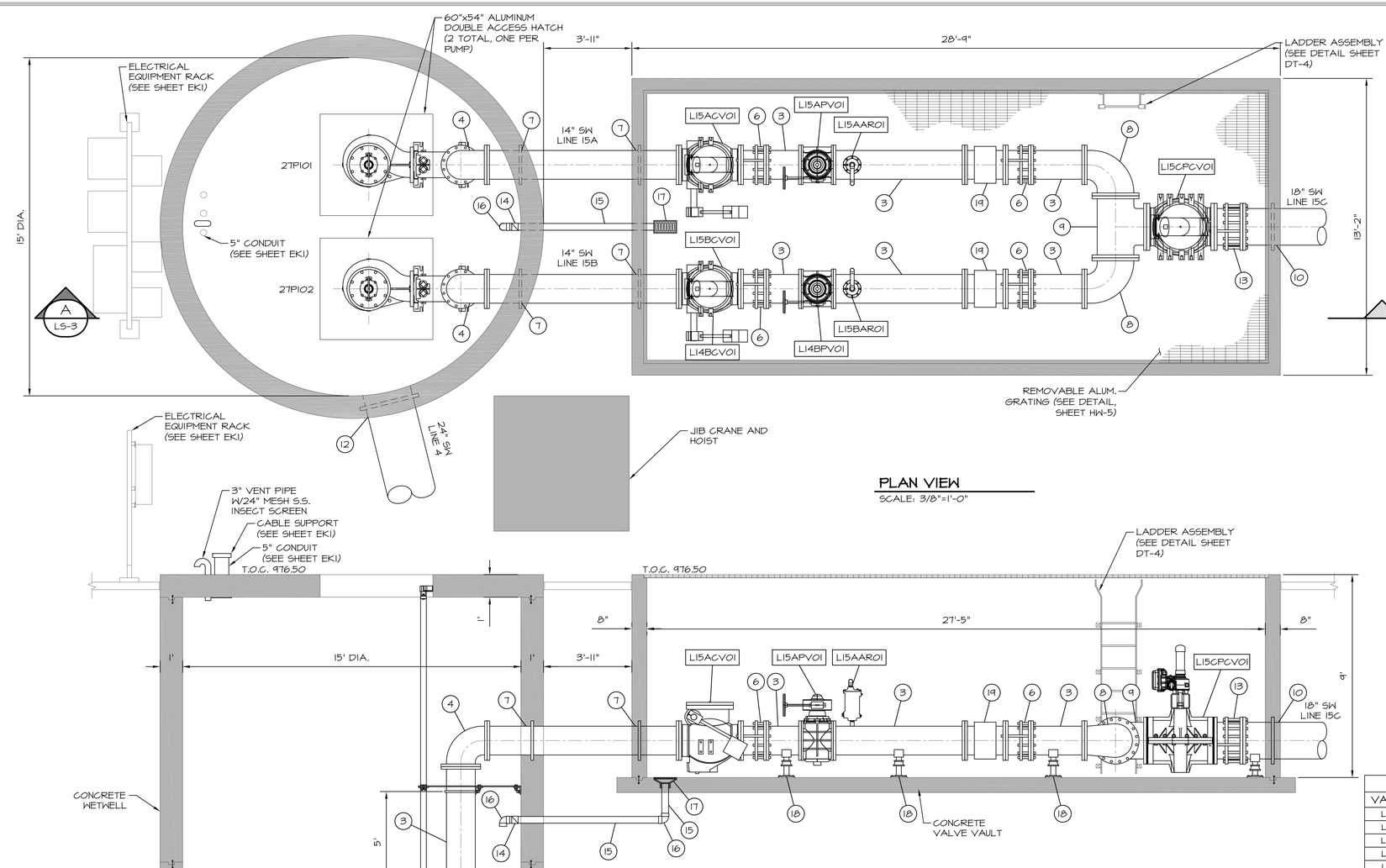

PLAN VIEW

SCALE: 3/8"=1'-0"

JIB CRANE FOUNDATION

N.T.S.

SECTION VIEW

SCALE: 3/8"=1'-0"

A LS-3

JIB CRANE NOTES:

1. JIB CRANE SHALL BE SPANCO MODEL 100 FREESTANDING JIB CRANE.
2. SPAN LENGTH SHALL BE 16'.
3. FURNISH 1 TON ELECTRIC MONORAIL HOIST W/ PUSH TROLLEY WITH WATERPROOF COVER.
4. CONTRACTOR TO PROVIDE AND INSTALL MECHANISM IN CONCRETE TO PREVENT CRANE FROM FREE ROTATING IF NOT SUPPLIED BY MANUFACTURER.
5. FOOTING DIMENSIONS ARE FOR REFERENCE ONLY AND SHALL BE PER MANUFACTURER REQUIREMENTS/RECOMMENDATIONS.
6. PROVIDE MOTORIZED TROLLEY HOIST CAPABLE OF LIFTING SUBMERSIBLE PUMPS FROM WET WELL FOR MAINTENANCE AND REPAIR.
7. HOIST SUPPLIER SHALL INSPECT AND CERTIFY HOIST INSTALLATION MEETS MINIMUM STANDARDS AND IS APPROPRIATE FOR THIS APPLICATION.

PIPING SCHEDULE STRUCTURE #27 & #28

NO.	ITEM	DESCRIPTION
1	12"x14" CONCENTRIC REDUCER, FLxFL	
2	14" D.I. SPOOL, FLxPE	
3	14" D.I. SPOOL, FLxFL	
4	14" D.I. 90° BEND, FLxFL	WITH RESTRAINED GLAND
5	NOT USED	
6	14" D.I. DISMANTLING JOINT, FLxFL	
7	14" WALL PIPE, FLxPE	WITH THRUST COLLAR
8	14"x18" D.I. REDUCING 90° BEND, FLxFL	ECCENTRIC
9	18"x18"x18" D.I. TEE, FLxFL	
10	18" WALL PIPE, FLxPE	WITH THRUST COLLAR
11	NOT USED	
12	24" WALL PIPE, FLxFL	WITH THRUST COLLAR
13	18" D.I. DISMANTLING JOINT, FLxFL	
14	3" PVC CHECK VALVE	
15	3" SCH. 80 PVC	IN 4" D.I. WALL SLEEVE
16	3" SHC. 80 PVC 90° BEND	
17	FLOOR DRAIN	NEENAH MODEL R-4937-A
18	PIPE SUPPORT	
19	14" ELECTROMAGNETIC FLOW METER	

VALVE SCHEDULE STRUCTURE #28

VALVE I.D.	VALVE TYPE	VALVE SIZE	MOTORIZED
L15ACV01	CHECK	14"	NA
L15APV01	PLUG	14"	YES
L15AAR01	COMBINATION AIR	2"	NA
L15BCV01	CHECK	14"	NA
L15BPV01	PLUG	14"	YES
L15BAR01	COMBINATION AIR	2"	NA
L15CPCV012	PINCH	18"	YES

NOTES:

1. ROUTE AIR/VAC DRAINS TO FLOOR DRAIN IN PVC.
2. AIR RELEASE VALVES TO BE SUPPLIED WITH ISOLATION BALL VALVE & ½" SAMPLE COCK.

PUMP SCHEDULE STRUCTURE #27

NO.	FLOW	TDH-DES	FUNCTION	CONTROL	HP	EFFICIENCY MIN.
27P101-27P102	3,250 GPM	22'	STORMWATER	VFD	30	81.56%

PUMP NOTES:

1. PUMPS SHALL PENTAIR OR APPROVED EQUAL.
2. PUMPS SHALL BE PROVIDED WITH BASE ELBOWS, S.S. RAILS, AND S.S. LIFTING CHAINS.
3. PROVIDE FITTINGS AS REQUIRED TO CONNECT BASE ELBOWS TO LIFT STATION PIPING.
4. EACH PUMP SHALL BE EQUIPPED WITH A VARIABLE FREQUENCY DRIVE.
5. HOLD CONDUIT TIGHT TO BOTTOM OF WET WELL SLAB. ONE CONDUIT FOR EACH POWER CABLE, ONE FOR FLOAT SWITCHES. SEAL CONDUITS TO KEEP WET WELL GASSES OUT OF CONTROL PANEL.
6. LOCATED FLOATS AND CABLE HOLDER AWAY FROM INLET PIPE.
8. ALL COMPONENTS SUBJECT TO CONTACT WITH WASTEWATER SHALL BE DUCTILE IRON OR STAINLESS STEEL.
9. SEE SHEET HA-5 FOR GATE DETAIL.
10. PIPE SUPPORT LOCATIONS ARE FOR REFERENCE ONLY & MORE MAY BE REQUIRED PER SPECIFICATIONS AND/OR INDUSTRY STANDARD.
11. WETWELL TO BE EQUIPPED WITH A LEVEL TRANSDUCER AND 3 BACKUP FLOATS (LOW LEVEL, ALARM, INFLUENT CLOSE).



WALL ENGINEERING
223 N. WASHINGTON AVE., DURANT, OK 74701
OKLAHOMA CA #5413 EXP. JUNE 30, 2023

SUBMITTAL / REVISIONS:

DATE	BY	SUBMITTAL / REVISION
03/22	JR	ODEQ SUBMITTAL
06/22	JR	ISSUED FOR BIDDING

SHAWNEE MUNICIPAL AUTHORITY
WASTEWATER SYSTEM IMPROVEMENTS
CONTRACT DOCUMENTS VOL. 4 OF 6 - NORTHSIDE WWTP

FEB RETURN LIFT STATION
MECHANICAL PLAN, SECTION AND SCHEDULES

PROJECT NO.
SHN-20-01

DATE
06/22

DRAWN BY:
JR

CHECKED BY:
BW

REVIEWED BY:
DBW

SCALE:
1/2"=1'-0"

BAR IS ONE INCH ON ORIGINAL DRAWING
0" 1"
IF NOT ONE INCH ON THIS SHEET, ADJUST SCALES ACCORDINGLY

SHEET
LS-3

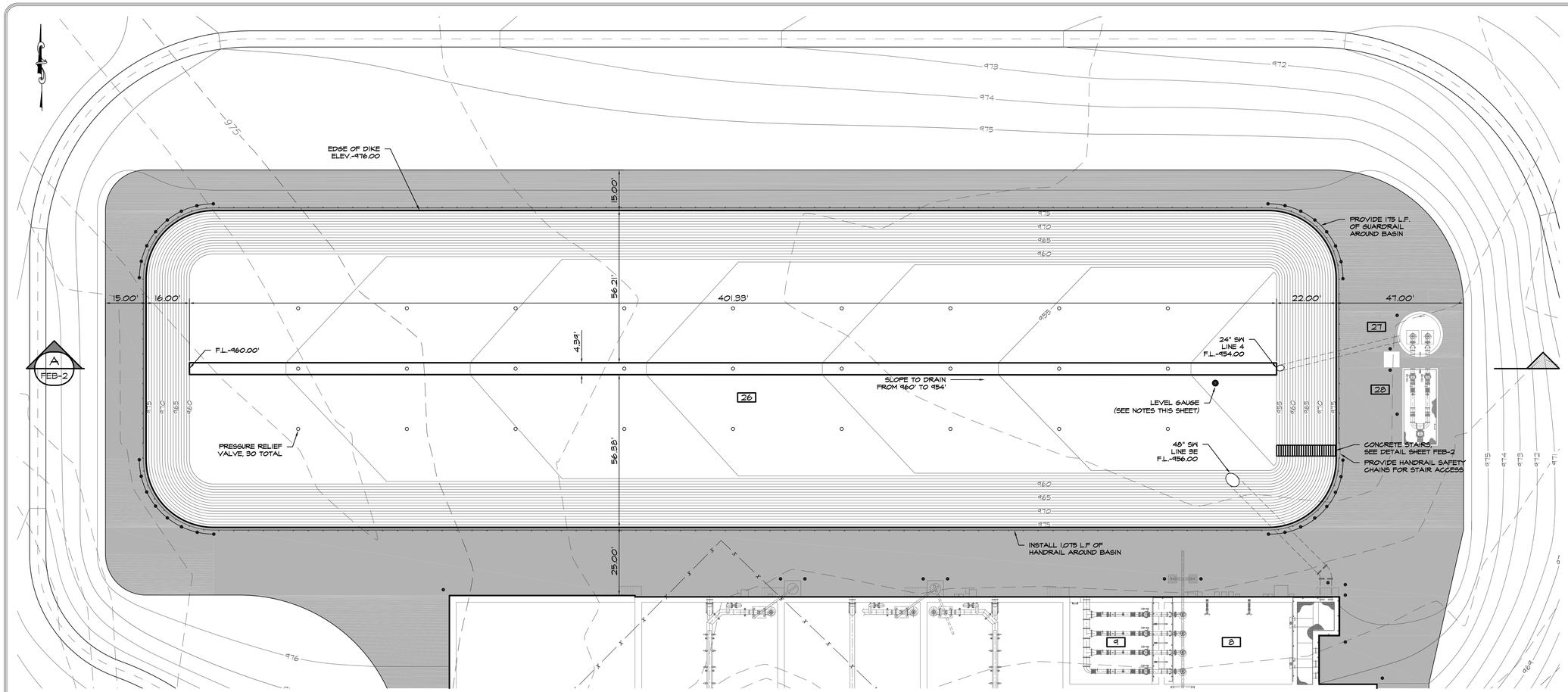

NOTES:

1. ALL CONCRETE SHALL BE 6" THICK.
2. CONTRACTOR SHALL SUBMIT TO THE ENGINEER FOR APPROVAL A JOINT SEALING METHOD FOR ALL CONSTRUCTION JOINTS REQUIRED IN THE CONCRETE LINER.
3. CONTRACTOR SHALL SUBMIT A JOINTING PLAN AND SLAB POURING SEQUENCE FOR APPROVAL BY THE ENGINEER.
4. JOINTS SHALL BE 20'-0" O.C. MAX.
5. THE FLOW EQUALIZATION BASIN SHALL BE EQUIPPED WITH TWO LEVEL GAUGES. THE LEVEL GAUGE SHALL CONSIST OF A 4" ⅜ 24-FEET LONG STEEL POST. THE POST SHALL HAVE A 2.5 MIL COAT OF TNEMEC 37H-77 CHEM-PRIME, 4.0 MIL COAT OF TNEMEC SERIES 66 EPOXOLINE, AND ONE COAT OF TNEMEC SERIES 74 HIGH-BUILD ENDURA SHIELD OR EQUAL PAINT SYSTEM. STEEL POST SHALL BE EMBEDDED 3-FEET IN THE GROUND WITH A MINIMUM OF 12" ⅜ CONCRETE 3-FEET DEEP. LETTERING SHALL CONSIST OF AN ALTERNATING PATTERN OF WHITE BACKGROUND W/BLACK NUMBERS (EVEN NUMERALS) AND BLACK BACKGROUND W/WHITE NUMBERS AT 1-FOOT INTERVALS IN TENTHS FOR A TOTAL OF 21-FEET. LEVEL GAUGE SHALL BE FIELD LOCATED BY THE OWNER.
6. COMPLETE HANDRAIL SYSTEM TO BE FURNISHED AS A SYSTEM FROM A SINGLE SUPPLIER. COMPLETE SYSTEM TO BE STAMPED BY AN OKLAHOMA STRUCTURAL ENGINEER (S.E.).

LEGEND

- EXISTING ASPHALT
- EXISTING GRAVEL
- STRUCTURE
- CONCRETE PAVING
- GRAVEL SURFACE
- SECURITY FENCE
- EXISTING SECURITY FENCE
- EXISTING BARBWIRE FENCE
- PROPOSED CONTOUR
- EXISTING CONTOUR
- PROPOSED FLOW LINE
- PIPE BOLLARD
- GUARDRAIL

REGISTERED PROFESSIONAL ENGINEER
06/14/23
BRANDON WALL
21108
OKLAHOMA

WALL ENGINEERING
223 N. WASHINGTON AVE., DURANT, OK 74701
OKLAHOMA CA #5413 EXP. JUNE 30, 2023

SUBMITTAL / REVISIONS:

DATE	BY	SUBMITTAL / REVISION
03/22	JR	ODEQ SUBMITTAL
06/22	JR	ISSUED FOR BIDDING

SHAWNEE MUNICIPAL AUTHORITY
WASTEWATER SYSTEM IMPROVEMENTS
CONTRACT DOCUMENTS VOL. 4 OF 6 - NORTHSIDE WWTP

WET WEATHER FLOW EQUALIZATION BASIN
PLAN VIEW

PROJECT NO.
SHN-20-01
DATE
06/22
DRAWN BY:
JR
CHECKED BY:
BW
REVIEWED BY:
DBW
SCALE:
1"=20'

BAR IS ONE INCH ON ORIGINAL DRAWING
0" 1"
IF NOT ONE INCH ON THIS SHEET, ADJUST SCALES ACCORDINGLY

SHEET
FEB-1

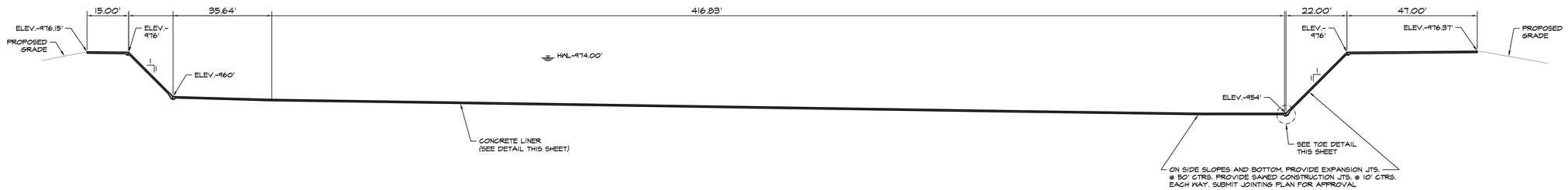

A FEB-1

SECTION VIEW

SCALE: 1"=20'

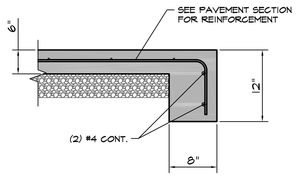

CONCRETE TOP DETAIL

SCALE: 1:1

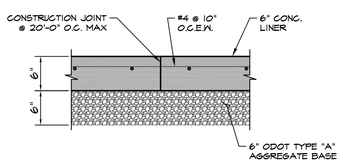

NOTES:

1. CONTRACTOR SHALL BEND ALL BARS AS REQUIRED FOR INSTALLATION.
2. CONTRACTOR SHALL ALTERNATE BARS TO BE CONTINUOUS THROUGH JOINT. STOP ALTERNATE BARS 2" FROM JOINT.
3. CONTRACTOR SHALL PROVIDE 6" PVC CENTER BULB WATER STOP IN JOINTS.
4. ON SIDE SLOPES AND BOTTOM, PROVIDE EXPANSION JTS. @ 50' CTRS. PROVIDE SAWED CONSTRUCTION JTS. @ 10' CTRS. EACH WAY. SUBMIT JOINTING PLAN FOR APPROVAL.

JOINT DETAIL/SECTION

SCALE: N.T.S.

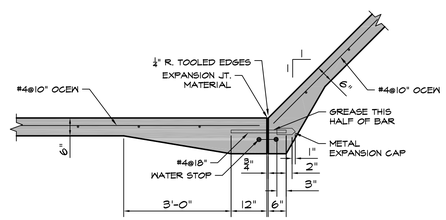

EXPANSION JOINT AT TOE OF SIDESLOPES

SCALE: 1:2

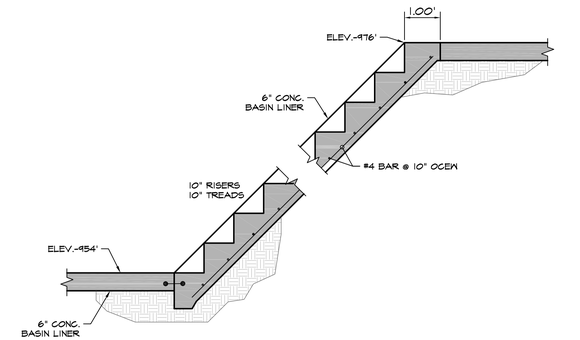

NOTE:
CONTRACTOR TO FIELD VERIFY STAIR RISER/TREAD & SUBMIT TO ENGINEER FOR APPROVAL

STAIR DETAILS

SCALE: 1:2

REGISTERED PROFESSIONAL ENGINEER
06/14/22
BRANDON WALL
21108
OKLAHOMA

WALL ENGINEERING
223 N. WASHINGTON AVE., DURANT, OK 74701
OKLAHOMA CA #5413 EXP. JUNE 30, 2023

SUBMITTAL / REVISIONS:

DATE	BY	SUBMITTAL / REVISION
03/22	JR	ODEQ SUBMITTAL
06/22	JR	ISSUED FOR BIDDING

SHAWNEE MUNICIPAL AUTHORITY
WASTEWATER SYSTEM IMPROVEMENTS
CONTRACT DOCUMENTS VOL. 4 OF 6 - NORTHSIDE WWTP

WET WEATHER FLOW EQUALIZATION BASIN
SECTION VIEW AND DETAILS

PROJECT NO. SHN-20-01
DATE 06/22
DRAWN BY: JR
CHECKED BY: BW
REVIEWED BY: DBW
SCALE: 1"=20'

BAR IS ONE INCH ON ORIGINAL DRAWING
0" 1"
IF NOT ONE INCH ON THIS SHEET, ADJUST SCALES ACCORDINGLY

SHEET
FEB-2

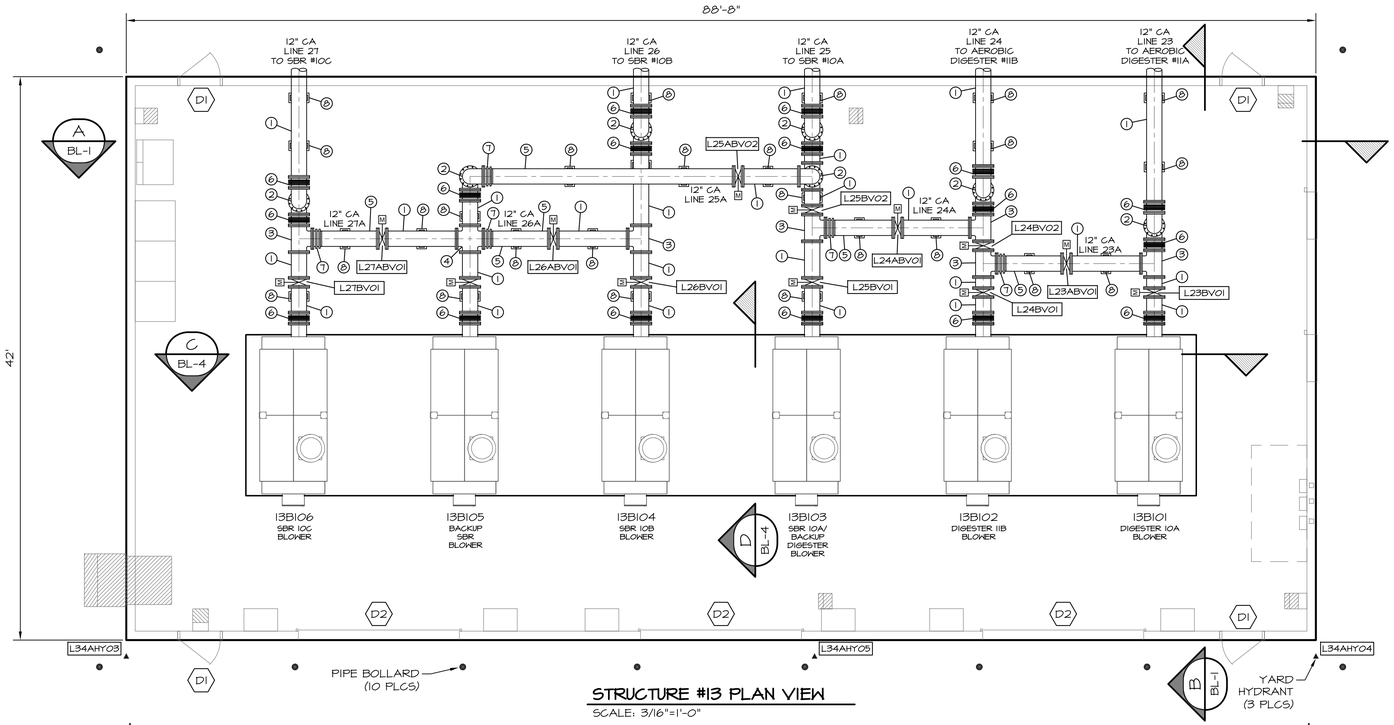

STRUCTURE #13 PLAN VIEW

SCALE: 3/16"=1'-0"

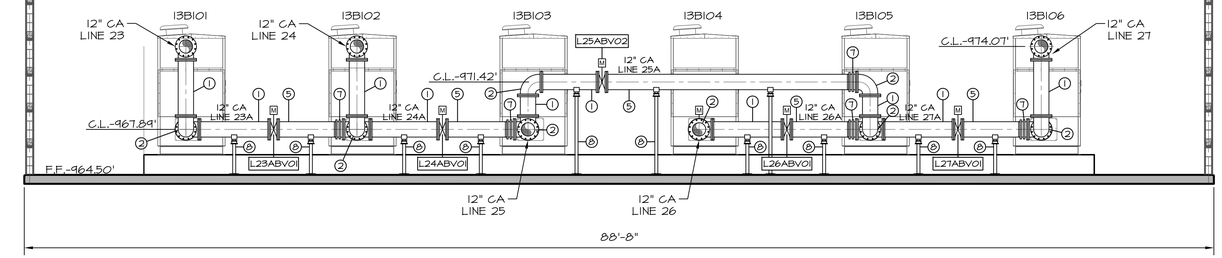

A SECTION VIEW

BL-1

SCALE: 3/16"=1'-0"

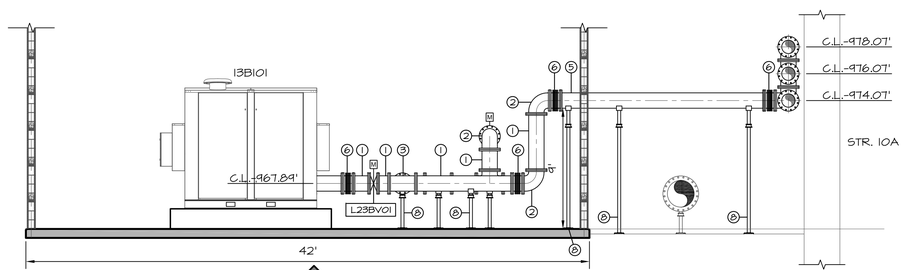

B SECTION VIEW

BL-1

SCALE: 3/16"=1'-0"

NOTES:

1. ALL AIR PIPING SHALL BE UNLINED DUCTILE IRON W/ EPDM GASKETS TEMPERATURE RATED FOR COMPRESSED AIR.
2. SLIGHTLY GRADE BLOWER SHED SLAB AND HOUSEKEEPING PADS TO DRAIN AWAY FROM BLOWER BASES.
3. CHECK ALL MOTORIZED VALVES FOR CORRECT OPERATION PRIOR TO START UP. ALL MANUFACTURER'S RECOMMENDED START UP CHECKS AND VALVE SETTING INSTRUCTIONS SHALL BE FOLLOWED PRIOR TO STARTUP.
4. ALL AIR PIPING SHALL BE LEAKAGE TESTED.
5. SUBMIT A PIPING PLAN SHOWING DIMENSIONS, WIRING ROUTING FOR MOTORIZED VALVES, EXACT PIPE SUPPORT LOCATIONS, AND QUANTITIES FOR APPROVAL BY ENGINEER.
6. BLOWERS SHALL BE SEQUENCED TO OPERATE IN A WAY WHICH ENABLES EACH BLOWER TO REST FOR A SET PERIOD WHILE OTHERS ARE AVAILABLE.
7. MANUFACTURERS REPRESENTATIVE SHALL CERTIFY IN WRITING THAT EQUIPMENT MEETS ALL INSTALLATION REQUIREMENTS.
8. PIPE SUPPLIER TO PROVIDE RECOMMENDATIONS FOR ANY ADDITIONAL EXPANSION/CONTRACTION JOINTS BASED ON FINAL SPECIFIC SCOPE OF SUPPLY.
9. PROVIDE SUFFICIENT PIPE SUPPORTS TO ADEQUATELY SUPPORT PIPE, FITTINGS, & VALVES. DRAWING LOCATION/NUMBER IS FOR REFERENCE ONLY.
10. DUCTILE IRON AIR PIPING SYSTEM TO BE DESIGNED AND FURNISHED COMPLETE BY VICTAULIC.

DOOR SCHEDULE - STRUCTURE #13

DOOR NO.	DESCRIPTION
D1	3'-0"x7'-0" STEEL INSULATED
D2	12'x10' METAL ROLL UP DOOR

NOTE:
1. DOORS/HARDWARE TO MATCH EXTERIOR DOORS ON OFFICE/LAB BUILDING

PIPING SCHEDULE - STRUCTURE #13

NO.	ITEM
1	12" D.I. SPOOL, GRxGR
2	12" D.I. 90° BEND, GRxGR
3	12"x12"x12" D.I. TEE, GRxGR
4	12" D.I. CROSS, GRxGR
5	12" D.I. SPOOL, GRxGR
6	12" FLANGED EXPANSION JOINT
7	12" DRESSER COUPLING
B	ADJUSTABLE PIPE SUPPORT

VALVE SCHEDULE - STRUCTURE #13

VALVE I.D.	VALVE TYPE	VALVE SIZE	LOCATION	MOTORIZED
L23BV01	WAFER BUTTERFLY	12"	13B101 DISCHARGE	YES
L23ABV01	WAFER BUTTERFLY	12"	PIPING BETWEEN 13B101 & 13B102	YES
L24BV01	WAFER BUTTERFLY	12"	13B102 DISCHARGE	YES
L24BV02	WAFER BUTTERFLY	12"	13B102 DISCHARGE	YES
L24ABV01	WAFER BUTTERFLY	12"	PIPING BETWEEN 13B102 & 13B103	YES
L25BV01	WAFER BUTTERFLY	12"	13B103 DISCHARGE	YES
L25BV02	WAFER BUTTERFLY	12"	13B103 DISCHARGE	YES
L25ABV01	WAFER BUTTERFLY	12"	13B105 DISCHARGE	YES
L25ABV02	WAFER BUTTERFLY	12"	PIPING BETWEEN 13B105 & 13B103	YES
L26BV01	WAFER BUTTERFLY	12"	13B104 DISCHARGE	YES
L26ABV01	WAFER BUTTERFLY	12"	PIPING BETWEEN 13B104 & 13B105	YES
L27BV01	WAFER BUTTERFLY	12"	13B106 DISCHARGE	YES
L27ABV01	WAFER BUTTERFLY	12"	PIPING BETWEEN 13B105 & 13B106	YES

BLOWER SCHEDULE - STRUCTURE #13

BLOWER I.D.	BLOWER HP/TYPE
13B101, 13B102	200HP EE-PAC W/ATTENU-PAC ENCLOSURE - DIGESTERS
13B103, 13B104, 13B105, 13B106	150HP EE-PAC W/ATTENU-PAC ENCLOSURE - SBR/STANDBY

WALL ENGINEERING
223 N. WASHINGTON AVE., DURANT, OK 74701
OKLAHOMA CA #5413 EXP. JUNE 30, 2023

SUBMITTAL / REVISIONS:

DATE	BY	SUBMITTAL / REVISION
03/22	JR	ODEQ SUBMITTAL
06/22	JR	ISSUED FOR BIDDING

SHAWNEE MUNICIPAL AUTHORITY
WASTEWATER SYSTEM IMPROVEMENTS
CONTRACT DOCUMENTS VOL. 4 OF 6 - NORTHSIDE WWTP

BLOWER BUILDING
PLAN, SECTIONS AND SCHEDULES

PROJECT NO.
SHN-20-01

DATE
06/22

DRAWN BY:
JR

CHECKED BY:
BW

REVIEWED BY:
DBW

SCALE:
3/16"=1'-0"

BAR IS ONE INCH ON ORIGINAL DRAWING
0" 1"
IF NOT ONE INCH ON THIS SHEET, ADJUST SCALES ACCORDINGLY

SHEET
BL-1

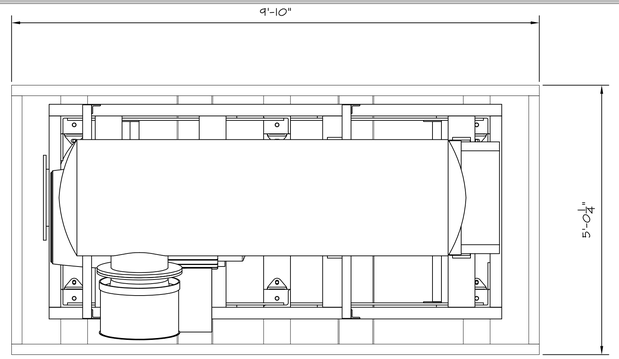

TOP VIEW
SCALE: 3/4"=1'-0"

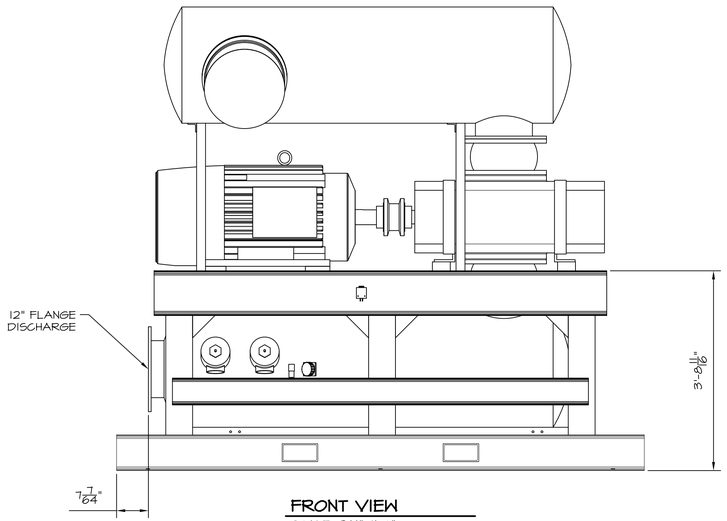

FRONT VIEW
SCALE: 3/4"=1'-0"

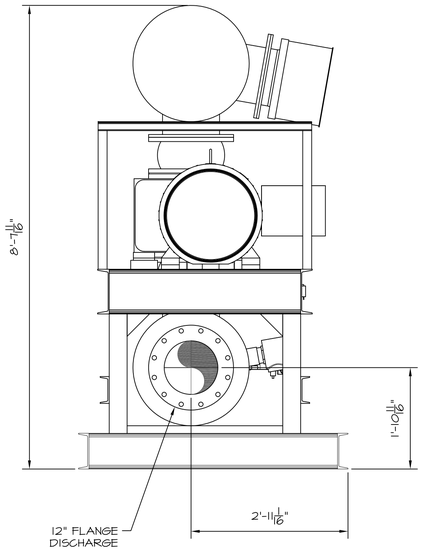

LEFT SIDE VIEW
SCALE: 3/4"=1'-0"

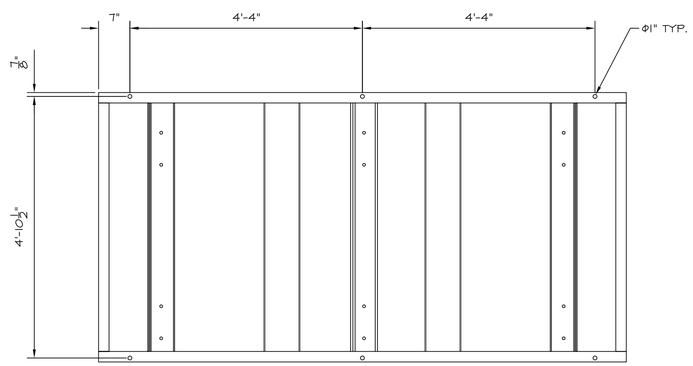

BASE TOP VIEW
SCALE: 3/4"=1'-0"

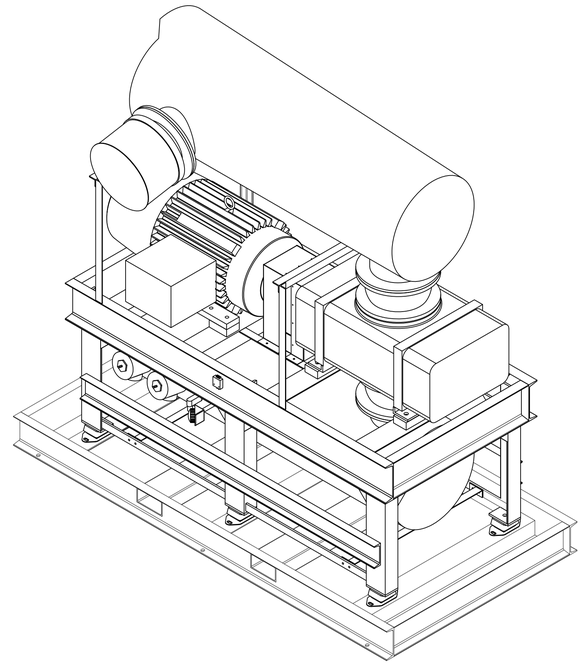

ISOMETRIC VIEW
SCALE: 3/4"=1'-0"

NOTE:
CONTRACTOR SHALL VERIFY INSTALLATION INSTRUCTIONS AND DIMENSIONS FROM APPROVED SUBMITTAL.



WALL ENGINEERING
223 N. WASHINGTON AVE., DURANT, OK 74701
OKLAHOMA CA #5413 EXP. JUNE 30, 2023

SUBMITTAL / REVISIONS:

DATE	BY	SUBMITTAL / REVISION
03/22	JR	ODEQ SUBMITTAL
06/22	JR	ISSUED FOR BIDDING

SHAWNEE MUNICIPAL AUTHORITY
WASTEWATER SYSTEM IMPROVEMENTS
CONTRACT DOCUMENTS VOL. 4 OF 6 - NORTHSIDE WWTP

BLOWER BUILDING
MISCELLANEOUS DETAILS

PROJECT NO.
SHN-20-01
DATE
06/22
DRAWN BY:
JR
CHECKED BY:
BW
REVIEWED BY:
DBW
SCALE:
3/4"=1'-0"

BAR IS ONE INCH ON ORIGINAL DRAWING
0" 1"
IF NOT ONE INCH ON THIS SHEET, ADJUST SCALES ACCORDINGLY

SHEET
BL-2

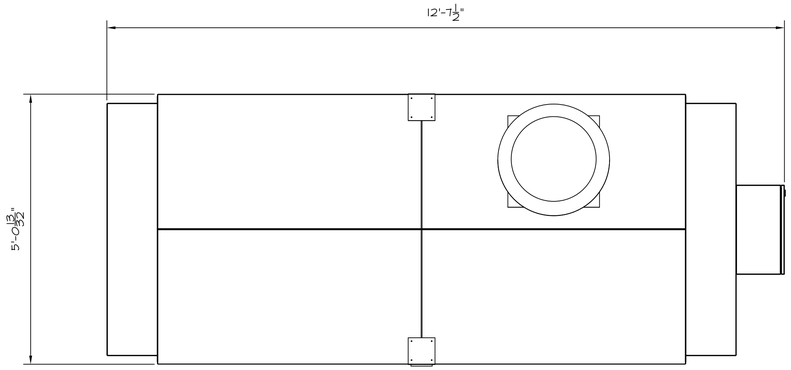

TOP VIEW
SCALE: 3/4"=1'-0"

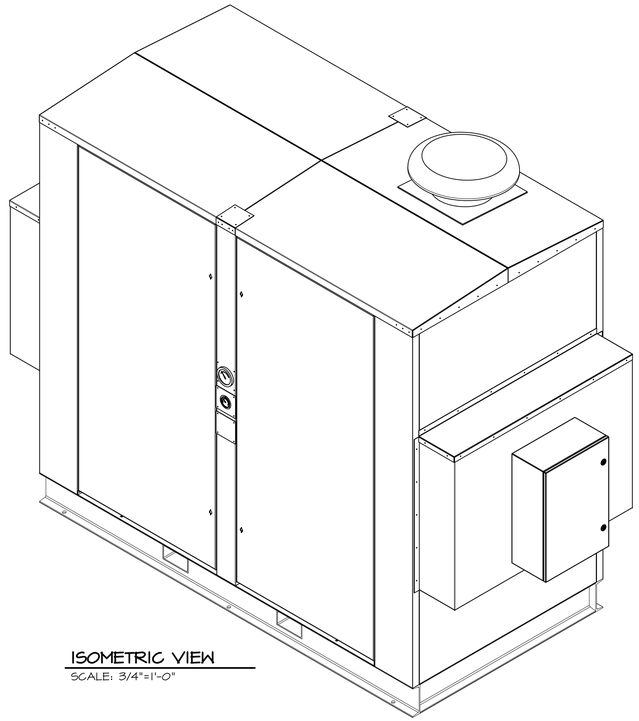

ISOMETRIC VIEW
SCALE: 3/4"=1'-0"

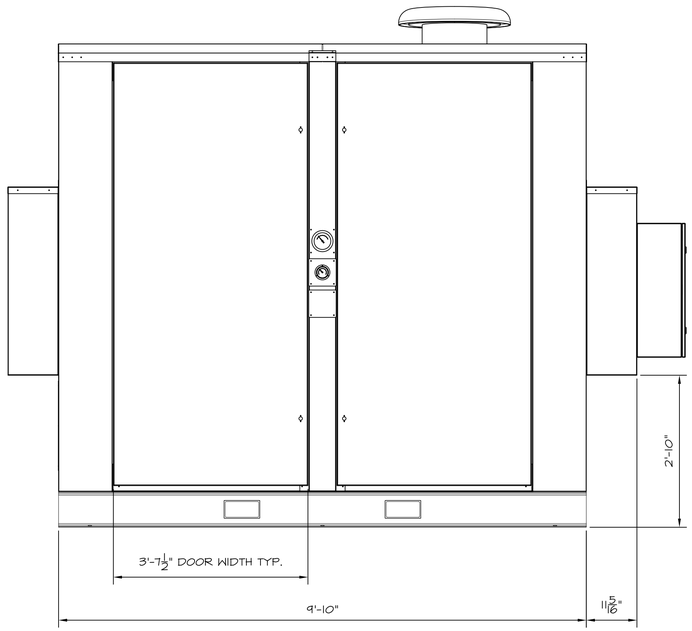

FRONT VIEW
SCALE: 3/4"=1'-0"

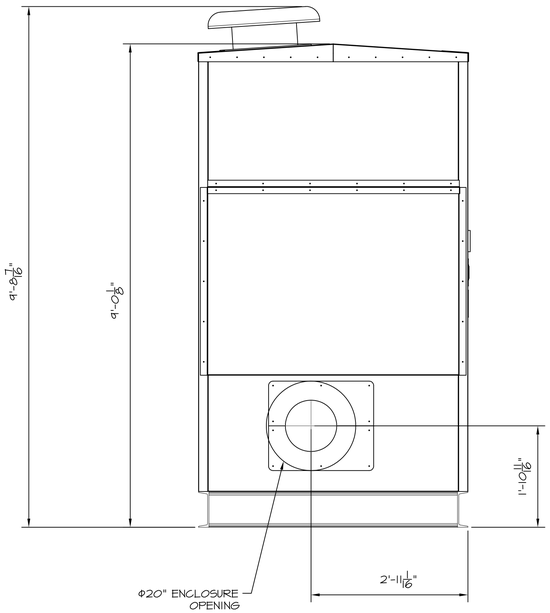

LEFT SIDE VIEW
SCALE: 3/4"=1'-0"

NOTE:
CONTRACTOR SHALL VERIFY INSTALLATION INSTRUCTIONS AND DIMENSIONS FROM APPROVED SUBMITTAL.



WALL ENGINEERING
223 N. WASHINGTON AVE., DURANT, OK 74701
OKLAHOMA CA #5413 EXP. JUNE 30, 2023

SUBMITTAL / REVISIONS:

DATE	BY	SUBMITTAL / REVISION
03/22	JR	OPEG SUBMITTAL
06/22	JR	ISSUED FOR BIDDING

SHAWNEE MUNICIPAL AUTHORITY
WASTEWATER SYSTEM IMPROVEMENTS
CONTRACT DOCUMENTS VOL. 4 OF 6 - NORTHSIDE WWTP

BLOWER BUILDING
MISCELLANEOUS DETAILS

PROJECT NO.	SHN-20-01
DATE	06/22
DRAWN BY:	JR
CHECKED BY:	BW
REVIEWED BY:	DBW
SCALE:	3/4"=1'-0"

BAR IS ONE INCH ON ORIGINAL DRAWING
0" 1"
IF NOT ONE INCH ON THIS SHEET, ADJUST SCALES ACCORDINGLY

SHEET
BL-3

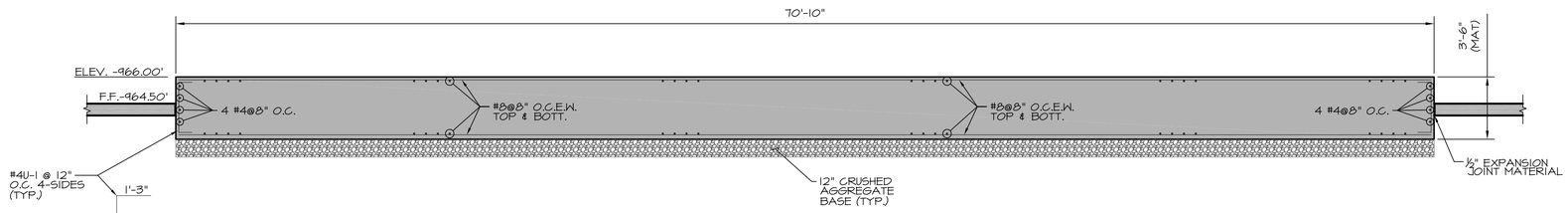

C BL-1 **SECTION VIEW**
SCALE: 1/4"=1'-0"

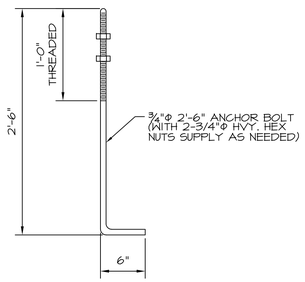

ANCHOR BOLT DETAIL
SCALE: NOT TO SCALE

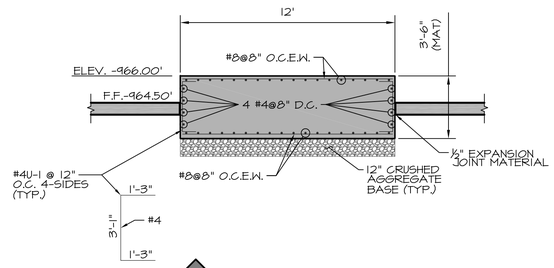

D BL-1 **SECTION VIEW**
SCALE: 1/4"=1'-0"

NOTES:

1. CONTRACTOR SHALL VERIFY ANCHOR BOLT PATTERNS WITH BLOWER MANUFACTURER, CHECK SUBMITTALS & LOCATE THEM ACCORDINGLY.
2. ELECTRICAL & CONTROL WIRING TO BLOWER & MOTORIZED VALVES SHALL BE VERIFIED AND APPROVED BY ENGINEER PRIOR TO LAYING MAT FOUNDATION.
3. VERIFY AIR PIPE SUPPORT SYSTEM PRIOR TO PLACING SIDEWALK AROUND PAD.



WALL ENGINEERING
223 N. WASHINGTON AVE., DURANT, OK 74701
OKLAHOMA CA #5413 EXP. JUNE 30, 2023

SUBMITTAL / REVISIONS:

DATE	BY	SUBMITTAL / REVISION
03/22	JR	ODEQ SUBMITTAL
06/22	JR	ISSUED FOR BIDDING

SHAWNEE MUNICIPAL AUTHORITY
WASTEWATER SYSTEM IMPROVEMENTS
CONTRACT DOCUMENTS VOL. 4 OF 6 - NORTHSIDE WWTP

BLOWER BUILDING
BLOWER PAD DETAIL

PROJECT NO.
SHN-20-01
DATE
06/22
DRAWN BY:
JR
CHECKED BY:
BW
REVIEWED BY:
DBW
SCALE:
1/4"=1'-0"

BAR IS ONE INCH ON ORIGINAL DRAWING
0" 1"
IF NOT ONE INCH ON THIS SHEET, ADJUST SCALES ACCORDINGLY

SHEET
BL-4

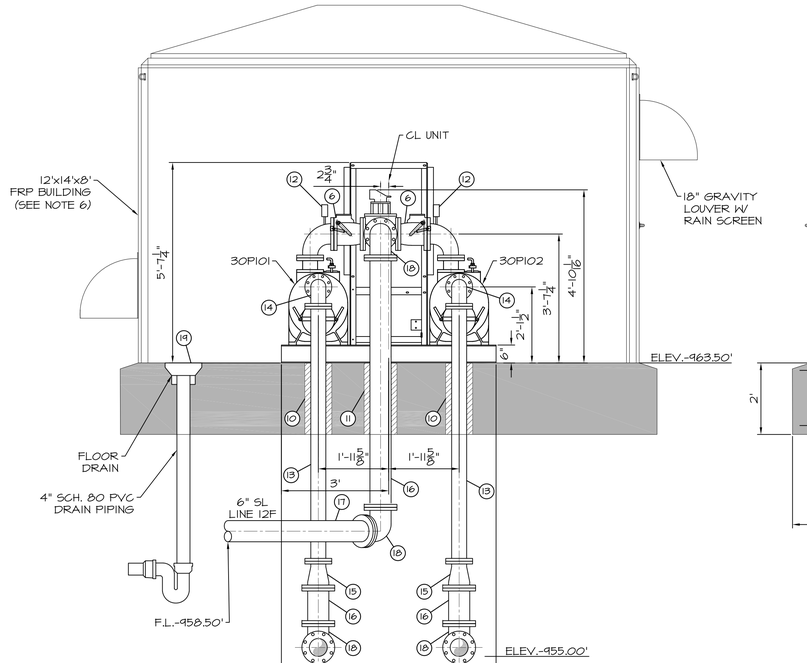

A WAS-1 **SECTION**
SCALE: 1/2"=1'-0"

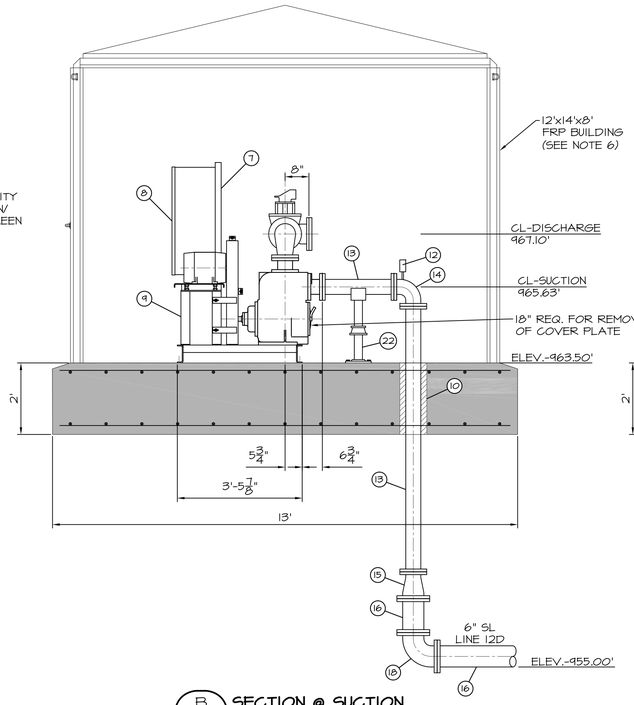

B WAS-1 **SECTION @ SUCTION**
SCALE: 1/2"=1'-0"

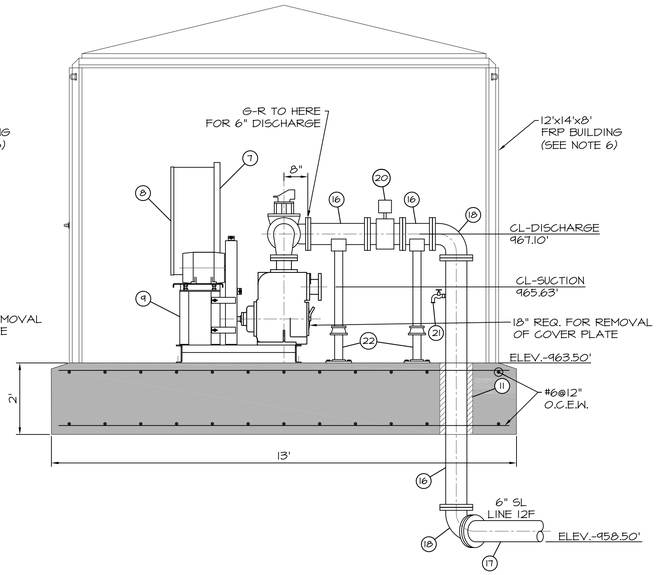

B WAS-1 **SECTION @ DISCHARGE**
SCALE: 1/2"=1'-0"

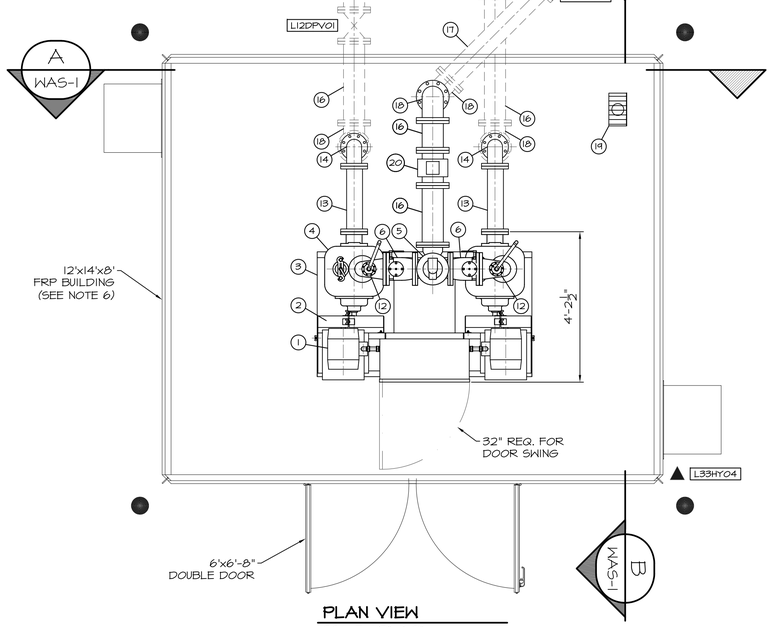

PLAN VIEW
SCALE: 1/2"=1'-0"

PUMP SCHEDULE - STRUCTURE #30				
NO.	FLOW	TDH-DES	CONTROL	HP
30P101 & 30P102	600 GPM	20'	VFD	7.5

PIPING & EQUIPMENT SCHEDULE - STRUCTURE #30		
NO.	DESCRIPTION	MATERIAL & SIZE
1	MOTOR	CAST IRON
2	BELT GUARD ASSY.	STEEL
3	STATION BASE ASSY.	STEEL
4	PUMP	CAST IRON, T4A-B (30P101 & 30P102)
5	DISCHARGE PLUG VALVE	CAST IRON, 6"
6	DISCHARGE CHECK VALVE	CAST IRON, 6"
7	CONTROL PANEL FRAME	STEEL
8	CONTROL PANEL	STEEL, 36" X 30"
9	MOTOR BASE ASSY.	STEEL
10	LINK SEAL FOR 4" DIP W/SLEEVE	
11	LINK SEAL FOR 6" DIP W/SLEEVE	
12	AIR RELEASE VALVE	
13	4" D.I. SPOOL, GRxGR	
14	4" D.I. 90° BEND, GRxGR	
15	4"x6" D.I. CONCENTRIC REDUCER	
16	6" D.I. SPOOL, GRxGR	
17	6" D.I. SPOOL, GRxGR	
18	6" D.I. 90° BEND, GRxGR	
19	FLOOR DRAIN	NEENAH MODEL R-4937-A
20	6" FLANGED MAGNETIC FLOW METER	L12FMM01
21	1-1/2" SAMPLE TAP WITH VALVE	
22	PIPE SUPPORTS	

VALVE SCHEDULE STRUCTURE #28			
VALVE I.D.	VALVE TYPE	VALVE SIZE	MOTORIZED
L12DPV01	PLUG	6"	YES
L12EPV01	PLUG	6"	YES
L12FPV01	PLUG	6"	YES

NOTES:

1. SLOPE FLOOR TO DRAIN.
2. ELECTRICAL & CONTROL CONDUIT WILL BE UNDER THE CONCRETE SLAB. (NO ELECTRICAL EQUIPMENT WILL BE MOUNTED ON THE FIBERGLASS ENCLOSURE.)
3. ALL FITTINGS FROM THE PLUG VALVES TO THE PUMPS WILL HAVE RESTRAINT GLANDS.
4. 90° BENDS, BOTH SUCTION & DISCHARGE AT THE PUMPS, SHALL BE TAPPED FOR PRESSURE GAUGES.
5. CONTRACTOR SHALL SUBMIT A DETAILED PLAN SHOWING PIPING ARRANGEMENT PIPE SIZES, LENGTHS, ELEVATIONS FOR PUMP STATIONS TO ENGINEER FOR APPROVAL PRIOR TO STARTING THIS WORK.
6. WAS PUMP BUILDING SHALL BE EQUIPPED WITH BREAKER PANEL, LIGHTING, ELECTRICAL RECEPTACLES, 18" EXHAUST FAN & LOUVER, AND 5KW HEATER WTHERMOSTAT. SUBMITTAL REQUIRED.
7. ENCLOSURE SHALL BE MOUNTED WITH ⅜"x6" SST. EXPANSION ANCHORS ON 12" CENTERS. "RED HEAD" TYPE. SEAL EXTERIOR CONNECT WITH MASTIC.
8. ROUTE AIR RELEASE DISCHARGE TO FLOOR DRAIN (SCH 40 PVC).
9. DUCTILE IRON PIPING SYSTEM TO BE DESIGNED AND FURNISHED COMPLETE BY VICTAULIC.



WALL ENGINEERING
223 N. WASHINGTON AVE., DURANT, OK 74701
OKLAHOMA CA #6413 EXP. JUNE 30, 2023

SUBMITTAL / REVISIONS:

DATE	BY	SUBMITTAL / REVISION
03/22	JR	ODEQ SUBMITTAL
05/22	JR	REVISED PER ODEQ COMMENT
06/22	JR	ISSUED FOR BIDDING

SHAWNEE MUNICIPAL AUTHORITY
WASTEWATER SYSTEM IMPROVEMENTS
CONTRACT DOCUMENTS VOL. 4 OF 6 - NORTHSIDE WWTP

WASTE SLUDGE PUMP STATION
PLAN, SEACTION AND DETAILS

PROJECT NO.
SHN-20-01
DATE
06/22
DRAWN BY:
TL
CHECKED BY:
JR
REVIEWED BY:
DBW
SCALE:
1/2"=1'-0"

BAR IS ONE INCH ON ORIGINAL DRAWING
0" 1"
IF NOT ONE INCH ON THIS SHEET, ADJUST SCALES ACCORDINGLY

SHEET
WAS-1

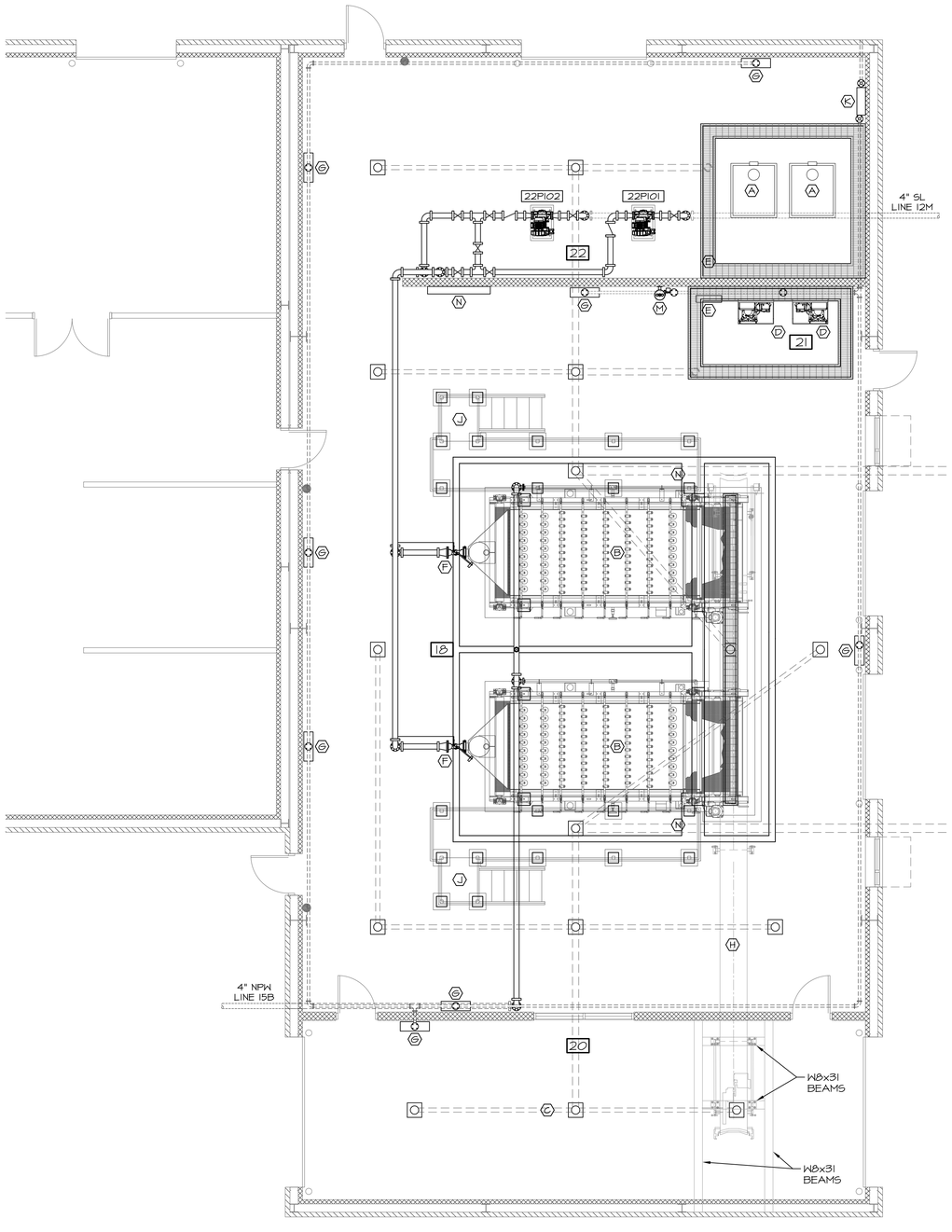

SLUDGE HANDLING FACILITY PLAN VIEW

SCALE: 3/16"=1'-0"

APPURTENANCE SCHEDULE STRUCTURES #18, #20, #21&#22	
APP. NO	DESCRIPTION
A	POLYMER TOTES (FROM CASH ALLOWANCE)
B	2 METER BELT FILTER PRESS
C	ROLL-OFF/DUMP TRUCK (BY OWNER)
D	CHEMICAL FEED PUMPS AND CONTROLLERS (SEE SHEET SHF-7 FOR DETAILS)
E	HEATER
F	6" POLYMER INJECTION RING W/MIXING VALVE (BY BFP MANUFACTURER)
G	WALL MOUNTED UTILITY STATION
H	CONVEYOR
J	WALKWAY (SEE SHF-6 FOR DETAILS)
K	BACKFLOW PREVENTER (SEE DT-5 FOR DETAIL)
L	8" FLOOR DRAIN
M	WALL MOUNTED EYE/FACE WASH (MODEL S19-220T MFG. BY BRADLEY)
N	ELECTRICAL/CONTROL PANEL
O	HOSE BIB (MODEL ZURN Z1343) INSTALL 3'-0" AFF, FURNISH & INSTALL WITH EXTERNAL VACUUM BREAKER

PUMP SCHEDULE STRUCTURE #22					
NO.	FLOW	TDH-DES	FUNCTION	CONTROL	HP
22P101-22P102	140 GPM	30'	SLUDGE FEED	VFD	7.5

NOTES:

1. ALL ITEMS ARE "OR APPROVED EQUAL".
2. POLYMER & NON-POTABLE WATER PIPING FINAL LAYOUT & ROUTING SHALL BE FIELD DETERMINED BY ENGINEER.
3. BELT FILTER PRESS CONTROL PANEL TO BE MOUNTED TO WALKWAY LOCATION SHOWN ON THIS SHEET. ATTACH UNISTRUT TO RAILING & DECKING OF WALKWAY. COORDINATE REVISION OF ELECTRICAL & CONTROL FEED LOCATIONS WITH ELECTRICAL SHEETS.
4. SEE ARCHITECTURAL SHEETS FOR BUILDING INFORMATION.
5. CONTRACTOR TO VERIFY EQUIPMENT DIMENSIONS WITH EQUIPMENT SUPPLIER PRIOR TO INSTALLATION.
6. BELT FILTER PRESS CONTROL PANEL TO BE MOUNTED TO WALKWAY LOCATION SHOWN ON THIS SHEET. ATTACH UNISTRUT TO RAILING & DECKING OF WALKWAY.

REGISTERED PROFESSIONAL ENGINEER
BRANDON WALL
21108
OKLAHOMA

WALL ENGINEERING
223 N. WASHINGTON AVE., DURANT, OK 74701
OKLAHOMA CA #5413 EXP. JUNE 30, 2023

SUBMITTAL / REVISIONS:

DATE	BY	SUBMITTAL / REVISION
03/22	JR	ODEQ SUBMITTAL
06/22	JR	ISSUED FOR BIDDING

SHAWNEE MUNICIPAL AUTHORITY
WASTEWATER SYSTEM IMPROVEMENTS
CONTRACT DOCUMENTS VOL. 4 OF 6 - NORTHSIDE WWTP

SLUDGE HANDLING FACILITY
PLAN VIEW AND APPURTENANCE SCHEDULES

PROJECT NO.	SHN-20-01
DATE	06/22
DRAWN BY:	JR
CHECKED BY:	BW
REVIEWED BY:	DBW
SCALE:	3/16"=1'-0"

BAR IS ONE INCH ON ORIGINAL DRAWING
0" 1"
IF NOT ONE INCH ON THIS SHEET, ADJUST SCALES ACCORDINGLY

SHEET

SHF-1

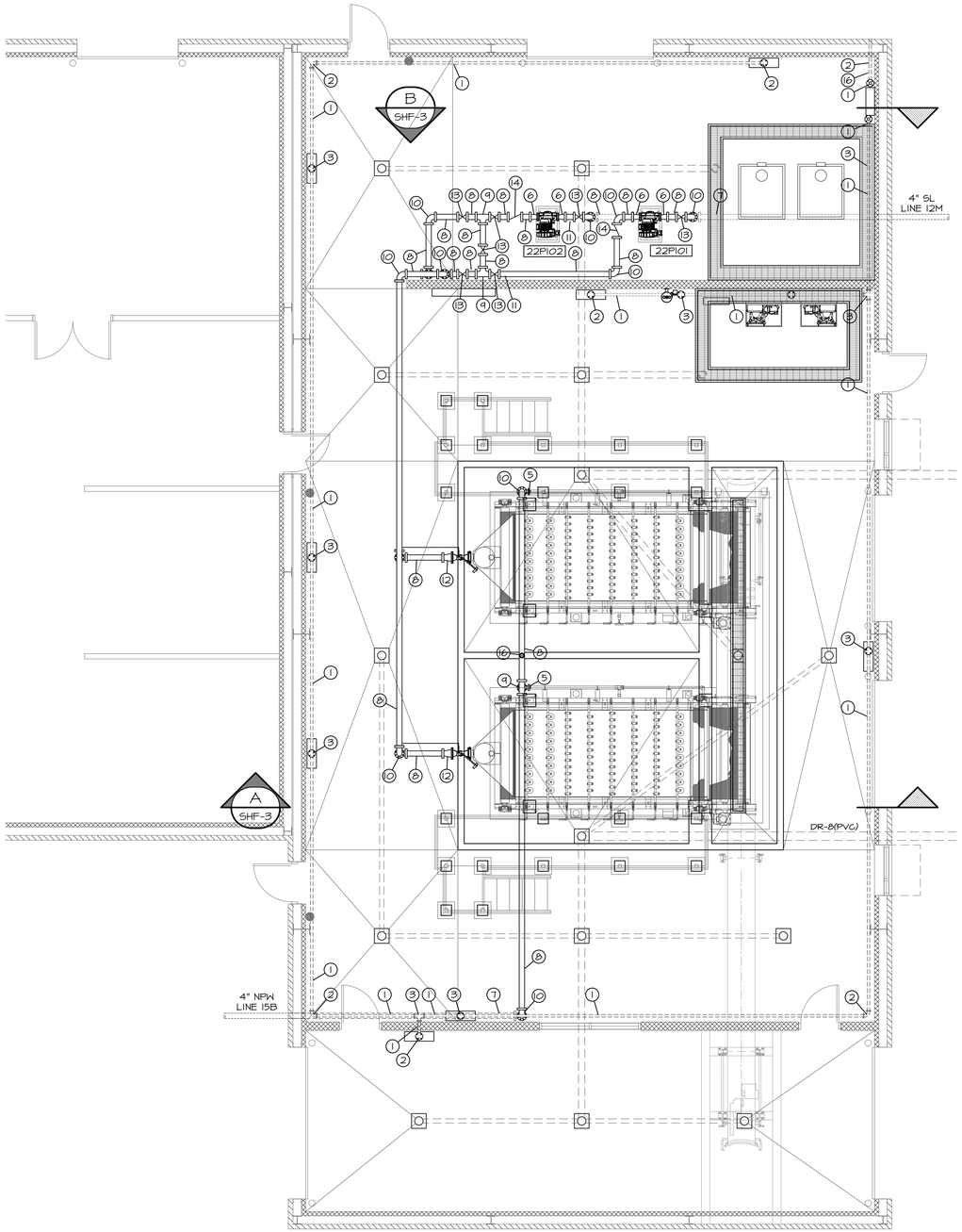

SLUDGE HANDLING FACILITY PLAN VIEW PIPING PLAN

SCALE: 3/16"=1'-0"

PUMP SCHEDULE STRUCTURE #22					
NO.	FLOW	TDH-DES	FUNCTION	CONTROL	HP
22P101-22P102	140 GPM	30'	SLUDGE FEED	VFD	7.5

PIPING SCHEDULE STRUCTURES #18, #20, #21&#22		
NO.	ITEM	DESCRIPTION
1	2" SST SPOOL, NPTxNPT	
2	2" SST 90° BEND, NPTxNPT	
3	2" SST TEE, NPTxNPT	
4	2" SST ADAPTER, FLxNPT	
5	2 ½" SST ADAPTER, FLxNPT	
6	3"x4" D.I. ECCENTRIC REDUCER, FLxGR	
7	4" D.I. SPOOL, GRxPE	
8	4" D.I. SPOOL, GRxGR	
9	4" D.I. TEE, GRxGR	
10	4" D.I. 90° BEND, GRxGR	
11	PIPE SUPPORTS	
12	4"x6" ECCENTRIC REDUCER, FLxGR	
13	4" PLUG VALVE, GRxGR	ELECTRIC ACTUATED
14	4" CHECK VALVE, GRxGR	
15	4" MAGNETIC FLOW METER	
16	½" COMBINATION AIR/VAC VALVE	
17	1-1/2" D.I. BUTTERFLY VALVE & SMOOTH NOSED SAMPLE TAP W/DRIP CAP	LEVER ACTUATED

NOTES:

1. ALL STAINLESS STEEL PIPING AND VALVES SHALL BE 316 AND BE FURNISHED AS A COMPLETE SYSTEM BY VICTAULIC.
2. CONTRACTOR SHALL VERIFY PUMP DISCHARGE/SUCTION PIPE SIZING WITH PUMP MANUFACTURER.
3. PIPING SHALL BE ADEQUATELY SUPPORTED TO PREVENT MOVEMENT DURING PUMP STARTUP/SHUTDOWN.
4. INSULATE/PROTECT DUCTILE TO STAINLESS TRANSITIONS WITH PAINTING, PLATING OR SPECIALIZED FITTING.
5. ALL DRAIN PIPING SHALL BE PVC DR-18, UNLESS NOTED OTHERWISE.
6. POLYMER PIPING FROM PUMPS TO MIXING VALVE NOT SHOWN FOR CLARITY & SHALL BE 1/4" I.D. CLEAR FLEXIBLE PVC PLASTIC TUBING.
7. AIR/VAC VALVE VENT TO BE EXTENDED TO FLOOR IN 1/2" PVC. EXACT LOCATION TO BE FIELD DETERMINED & APPROVED BY ENGINEER.

REGISTERED PROFESSIONAL ENGINEER
06/24/22
BRANDON WALL
21108
OKLAHOMA

WALL ENGINEERING
223 N. WASHINGTON AVE., DURANT, OK 74701
OKLAHOMA CA #5413 EXP. JUNE 30, 2023

SUBMITTAL / REVISIONS:

DATE	BY	SUBMITTAL / REVISION
03/22	JR	ODEQ SUBMITTAL
06/22	JR	ISSUED FOR BIDDING

SHAWNEE MUNICIPAL AUTHORITY
WASTEWATER SYSTEM IMPROVEMENTS
CONTRACT DOCUMENTS VOL. 4 OF 6 - NORTHSIDE WWTP

SLUDGE HANDLING FACILITY
PIPING PLAN AND SCHEDULES

PROJECT NO.
SHN-20-01
DATE
06/22
DRAWN BY:
JR
CHECKED BY:
BW
REVIEWED BY:
DBW
SCALE:
3/16"=1'-0"

BAR IS ONE INCH ON ORIGINAL DRAWING
0" 1"
IF NOT ONE INCH ON THIS SHEET, ADJUST SCALES ACCORDINGLY

SHEET
SHF-2

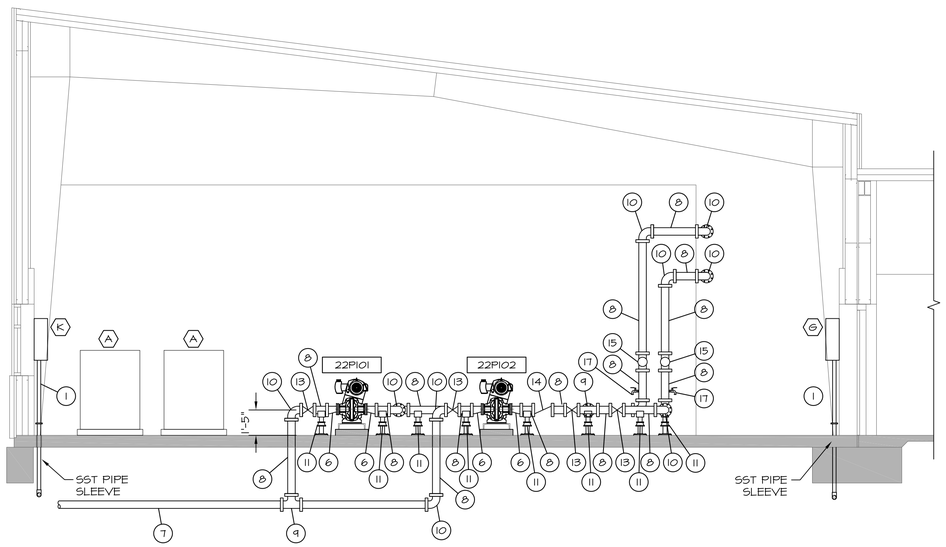

B SHF-1 **SECTION VIEW**
SCALE: 1/4"=1'-0

PUMP SCHEDULE STRUCTURE #22					
NO.	FLOW	TDH-DES	FUNCTION	CONTROL	HP
22P101-22P102	140 GPM	30'	SLUDGE FEED	VFD	7.5

PIPING SCHEDULE STRUCTURES #18, #20, #21&#22		
NO.	ITEM	DESCRIPTION
1	2" SST SPOOL, NPTxNPT	
2	2" SST 90° BEND, NPTxNPT	
3	2" SST TEE, NPTxNPT	
4	2" SST ADAPTER, FLxNPT	
5	2 ½" SST ADAPTER, FLxNPT	
6	3"x4" D.I. ECCENTRIC REDUCER, FLxGR	
7	4" D.I. SPOOL, GRxPE	
8	4" D.I. SPOOL, GRxGR	
9	4" D.I. TEE, GRxGR	
10	4" D.I. 90° BEND, GRxGR	
11	PIPE SUPPORTS	
12	4"x6" ECCENTRIC REDUCER, FLxGR	
13	4" PLUG VALVE, GRxGR	ELECTRIC ACTUATED
14	4" CHECK VALVE, GRxGR	
15	4" MAGNETIC FLOW METER	
16	½" COMBINATION AIR/VAC VALVE	
17	1-1/2" D.I. BUTTERFLY VALVE & SMOOTH NOSED SAMPLE TAP W/DRIP CAP	LEVER ACTUATED

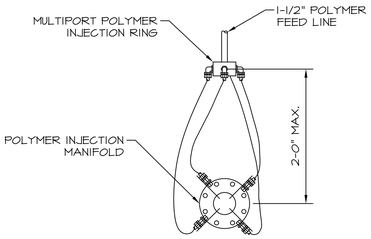

POLYMER MIXING ASSEMBLY
SCALE: N.T.S.

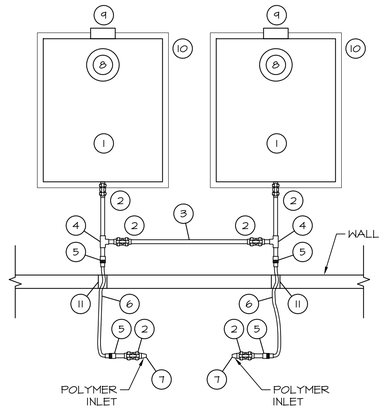

POLYMER FEED SCHEMATIC
SCALE: NOT TO SCALE

LEGEND

1. 275 GAL. TOTE (1" OUTLET)
2. 1" FULL PORT CPVC BALL VALVE
3. 1" CPVC
4. 1" CPVC TEE
5. 1" QUICK DISCONNECT COUPLING (FEMALE)
6. 1" BRAIDED PVC HOSE W/DUAL QUICK DISCONNECT COUPLE EACH END (MALE)
7. 1"x0.5" CPVC REDUCER
8. TOTE MIXER (3/4 HP, 350 RPM)
9. POLYMER CHEMICAL PUMP
10. CHEMICAL SCALES
11. 2" STAINLESS STEEL WALL SLEEVE

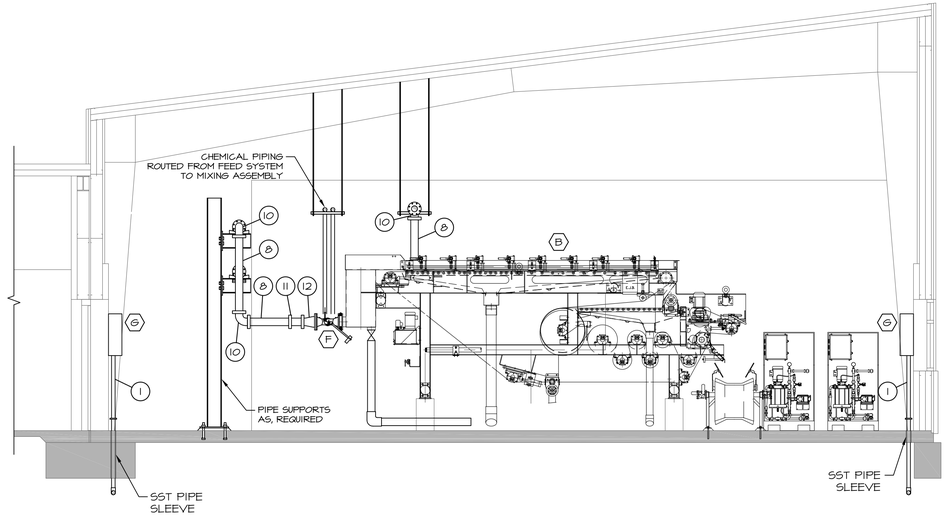

A SHF-1 **SECTION VIEW**
SCALE: 1/4"=1'-0"

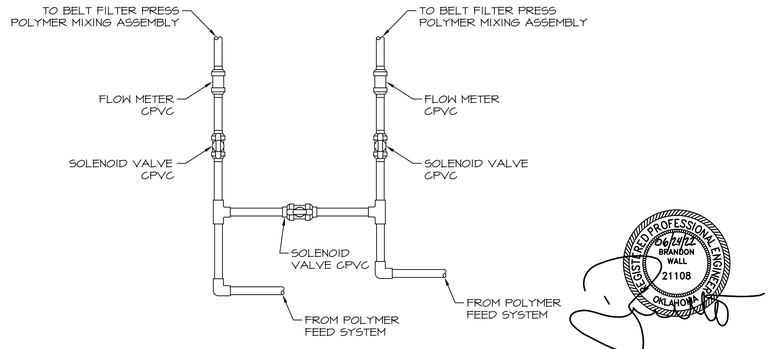

POLYMER FEED OUTLET PIPING SCHEMATIC
SCALE: NOT TO SCALE

WALL ENGINEERING
223 N. WASHINGTON AVE., DURANT, OK 74701
OKLAHOMA CA #6413 EXP. JUNE 30, 2023

SUBMITTAL / REVISIONS:

DATE	BY	SUBMITTAL / REVISION
03/22	JR	ODEQ SUBMITTAL
06/22	JR	ISSUED FOR BIDDING

SHAWNEE MUNICIPAL AUTHORITY
WASTEWATER SYSTEM IMPROVEMENTS
CONTRACT DOCUMENTS VOL. 4 OF 6 - NORTHSIDE WWTP

SLUDGE HANDLING FACILITY
SECTION VIEWS AND SCHEDULES

PROJECT NO. SHN-20-01
DATE 06/22
DRAWN BY: JR
CHECKED BY: BW
REVIEWED BY: DBW
SCALE: 1/4"=1'-0"

BAR IS ONE INCH ON ORIGINAL DRAWING
0" 1"
IF NOT ONE INCH ON THIS SHEET, ADJUST SCALES ACCORDINGLY

SHEET
SHF-3

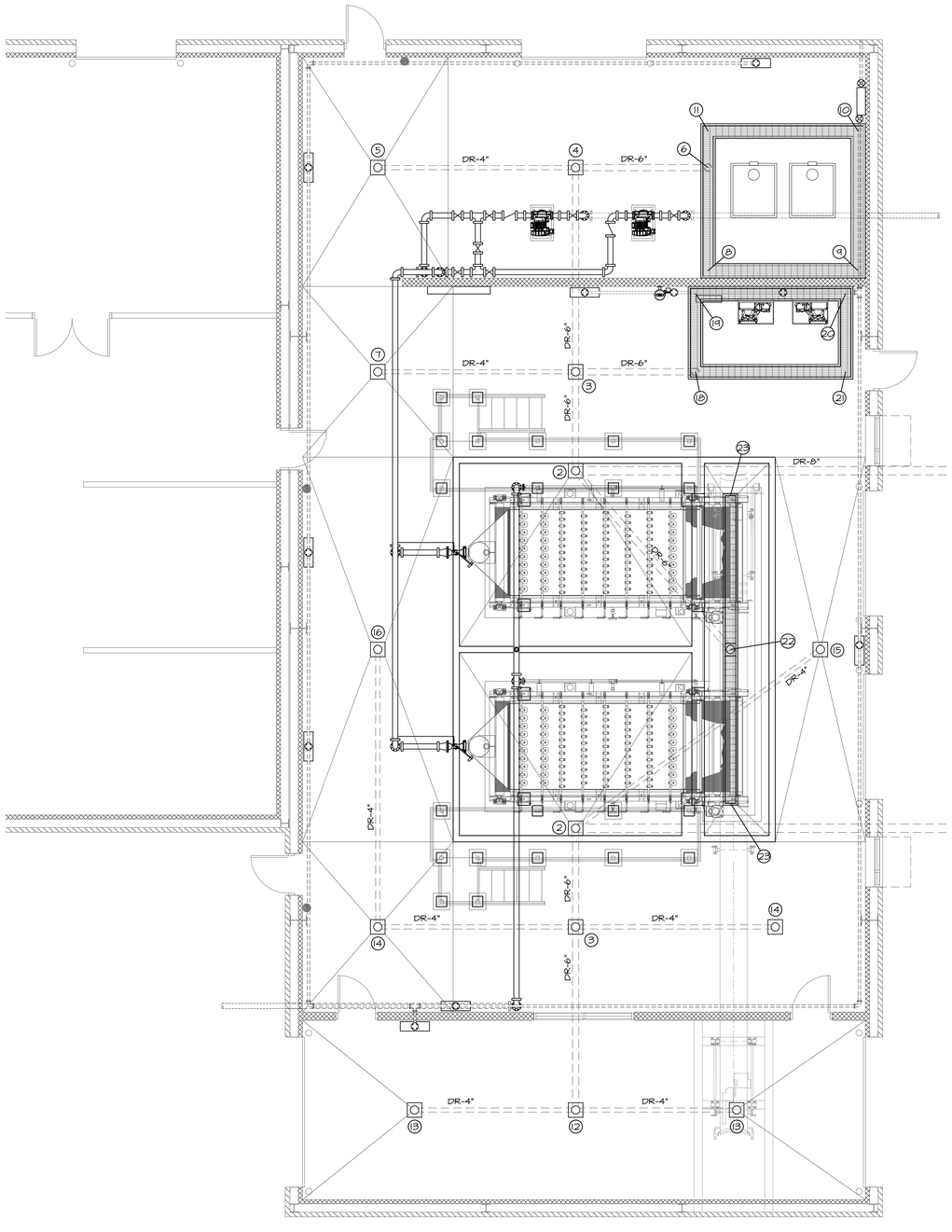

SLUDGE HANDLING FACILITY PLAN VIEW DRAIN SYSTEM PLAN

SCALE: 3/16"=1'-0"

DRAIN PIPING SCHEDULE
STRUCTURES #18, #20, #21&#22

NO.	FFE	F.L. DRAIN	F.L. MANHOLE/ DRAIN	NOTES
1	NA	959.00'	950.45'	SEE NOTE 1
2	964.99'	959.81'	NA	
3	965.19'	960.00'	NA	
4	965.33'	960.42'	NA	
5	965.19'	960.82'	NA	
6	965.33'	960.68'	964.01'	
7	965.19'	960.40'	NA	
8	965.33'	NA	964.27'	
9	965.33'	NA	964.66'	
10	965.33'	NA	964.38	
11	965.33'	NA	964.08'	
12	965.19'	960.37'	NA	
13	965.19'	960.69'	NA	
14	965.19'	960.40'	NA	
15	965.19'	960.42'	NA	
16	965.19'	960.96'	NA	
17	NA	959.00'	950.56'	SEE NOTE 1
18	965.33'	960.24'	964.20'	
19	965.33'	NA	964.36'	
20	965.33'	NA	964.66'	
21	965.33'	NA	964.50'	
22	964.25	960.28	NA	
23	965.23	NA	964.56	

NOTES:

1. 8" DRAIN TO TERMINATE IN MANHOLE WITH 8" TIDEFLEX CHECK VALVE (2 PLACES).
2. SEE TRENCH AND DRAIN DETAILS ON THE SHEETS FOR SPECIFICS.
3. DRAIN SYSTEM TO BE DESIGNED AND FURNISHED BY VICTAULIC (DUCTILE IRON).

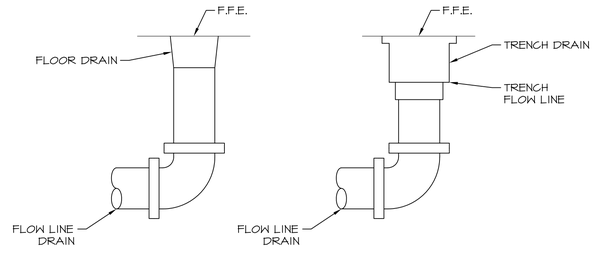

DRAIN PIPING DETAL

SCALE: NOT TO SCALE

REGISTERED PROFESSIONAL ENGINEER
06/24/22
BRANDON WALL
21108
OKLAHOMA

WALL ENGINEERING
223 N. WASHINGTON AVE., DURANT, OK 74701
OKLAHOMA CA #5413 EXP. JUNE 30, 2023

SUBMITTAL / REVISIONS:

DATE	BY	SUBMITTAL / REVISION
03/22	JR	ODEQ SUBMITTAL
06/22	JR	ISSUED FOR BIDDING

SHAWNEE MUNICIPAL AUTHORITY
WASTEWATER SYSTEM IMPROVEMENTS
CONTRACT DOCUMENTS VOL. 4 OF 6 - NORTHSIDE WWTP

SLUDGE HANDLING FACILITY
DRAIN SYSTEM PLAN

PROJECT NO.
SHN-20-01

DATE
06/22

DRAWN BY:
JR

CHECKED BY:
BW

REVIEWED BY:
DBW

SCALE:
3/16"=1'-0"

BAR IS ONE INCH ON ORIGINAL DRAWING
0" 1"
IF NOT ONE INCH ON THIS SHEET, ADJUST SCALES ACCORDINGLY

SHEET

SHF-4

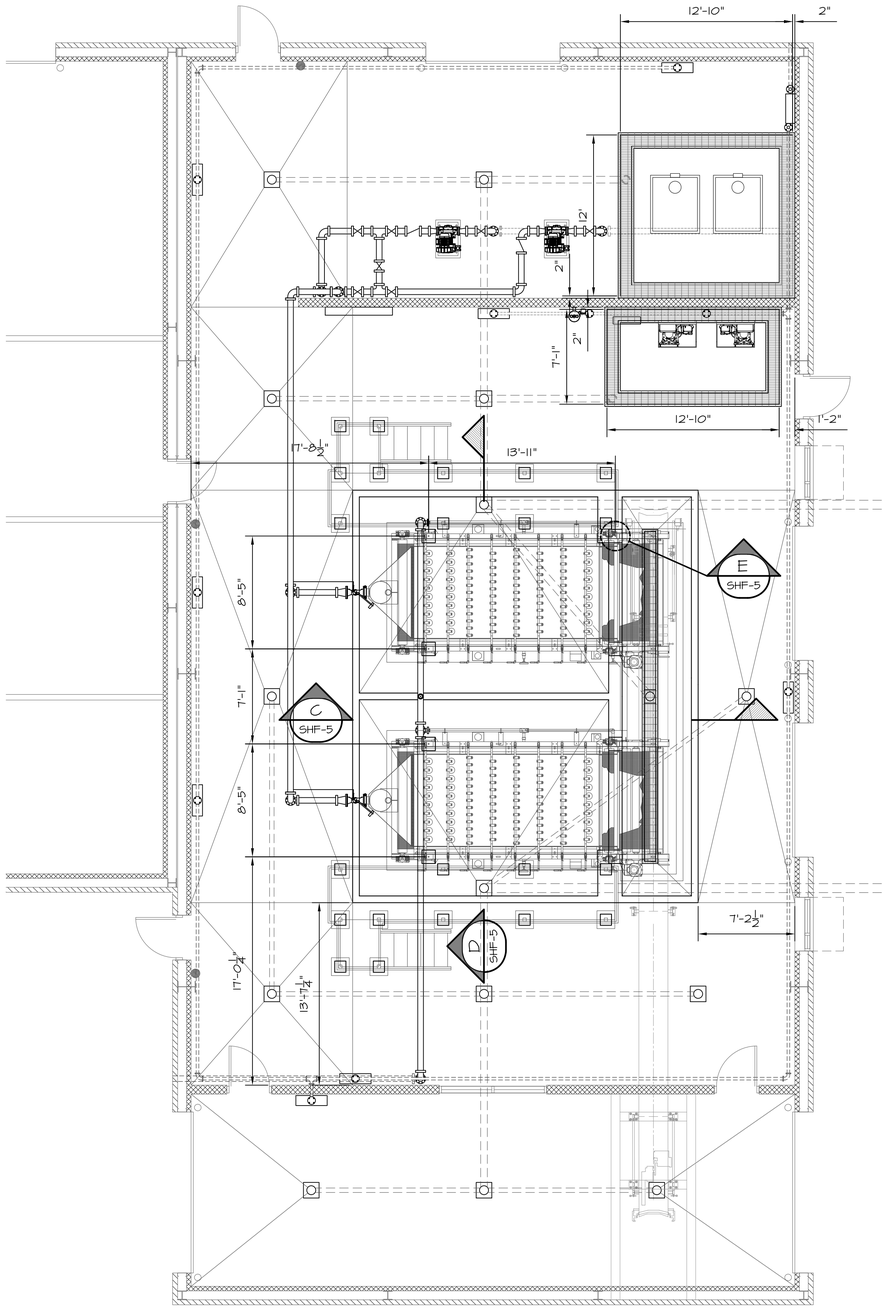

SLUDGE HANDLING FACILITY PLAN VIEW PIPING PLAN

SCALE: 3/16"=1'-0"

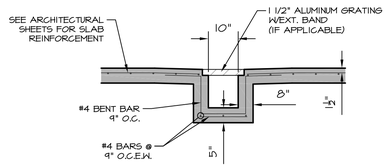

SECTION

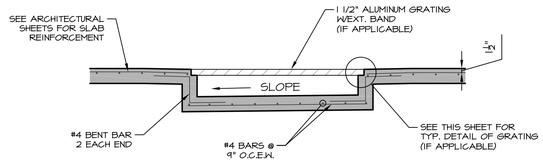

PROFILE

TYPICAL REINFORCEMENT FOR TRENCH DRAIN

SCALE: NOT TO SCALE

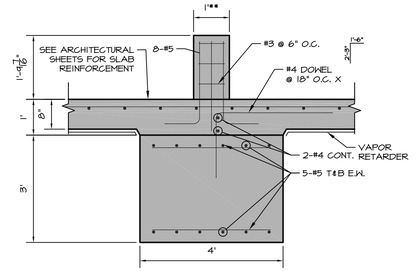

E SHF-5 **SECTION**

SCALE: 1/2" = 1'-0"

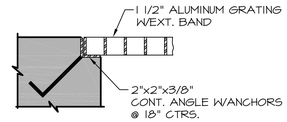

TYPICAL DETAIL OF GRATING

SCALE: NOT TO SCALE

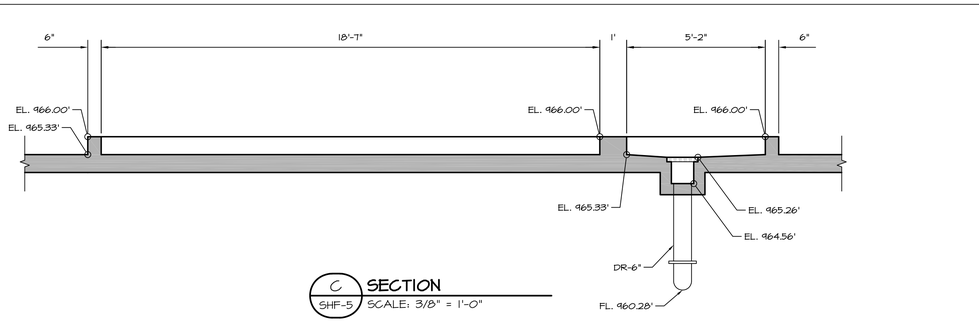

C SHF-5 **SECTION**

SCALE: 3/8" = 1'-0"

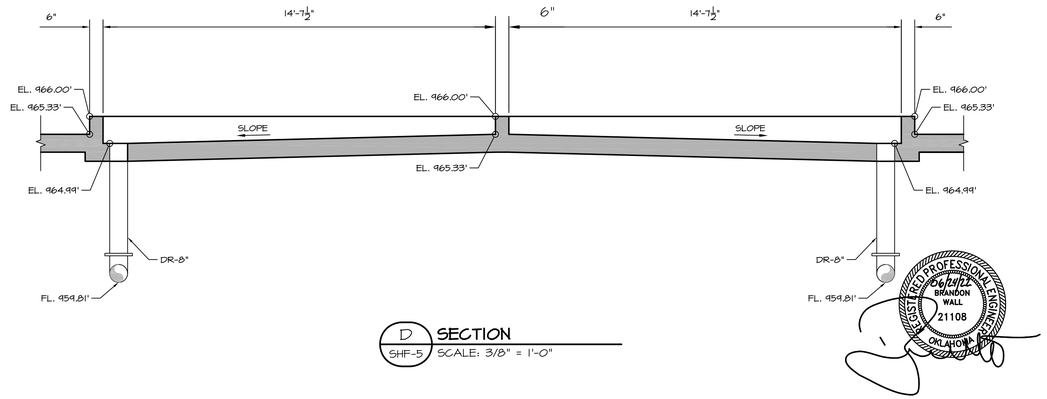

D SHF-5 **SECTION**

SCALE: 3/8" = 1'-0"

WALL ENGINEERING
223 N. WASHINGTON AVE. DURANT, OK 74701
OKLAHOMA CA #5413 EXP. JUNE 30, 2023

SUBMITTAL / REVISIONS:

DATE	BY	SUBMITTAL / REVISION
03/22	JR	ODEQ SUBMITTAL
06/22	JR	ISSUED FOR BIDDING

SHAWNEE MUNICIPAL AUTHORITY
WASTEWATER SYSTEM IMPROVEMENTS
CONTRACT DOCUMENTS VOL. 4 OF 6 - NORTHSIDE WWTP

SLUDGE HANDLING FACILITY
FOUNDATION PLAN SECTION AND DETAILS

PROJECT NO.
SHN-20-01
DATE
06/22
DRAWN BY:
JR
CHECKED BY:
BW
REVIEWED BY:
DBW
SCALE:
AS SHOWN

BAR IS ONE INCH ON ORIGINAL DRAWING
0" 1"
IF NOT ONE INCH ON THIS SHEET, ADJUST SCALES ACCORDINGLY

REGISTERED PROFESSIONAL ENGINEER
06/24/22
BRANDON WALL
21108
OKLAHOMA

SHEET

SHF-5

PLAN VIEW

SCALE: 3/4" = 1'-0"

WALL ENGINEERING
223 N. WASHINGTON AVE., DURANT, OK 74701
OKLAHOMA CA #5413 EXP. JUNE 30, 2023

SUBMITTAL / REVISIONS:

DATE	BY	SUBMITTAL / REVISION
03/22	JR	ODEQ SUBMITTAL
06/22	JR	ISSUED FOR BIDDING

SHAWNEE MUNICIPAL AUTHORITY
WASTEWATER SYSTEM IMPROVEMENTS
CONTRACT DOCUMENTS VOL. 4 OF 6 - NORTHSIDE WWTP

SLUDGE HANDLING FACILITY
BELT FILTER PRESS PLAN VIEW

PROJECT NO.
SHN-20-01

DATE
06/22

DRAWN BY:
JR

CHECKED BY:
BW

REVIEWED BY:
DBW

SCALE:
3/4"=1-0"

BAR IS ONE INCH ON ORIGINAL DRAWING
0" 1"
IF NOT ONE INCH ON THIS SHEET, ADJUST SCALES ACCORDINGLY

REGISTERED PROFESSIONAL ENGINEER
06/24/22
BRANDON WALL
21108
OKLAHOMA

SHEET

SHF-6

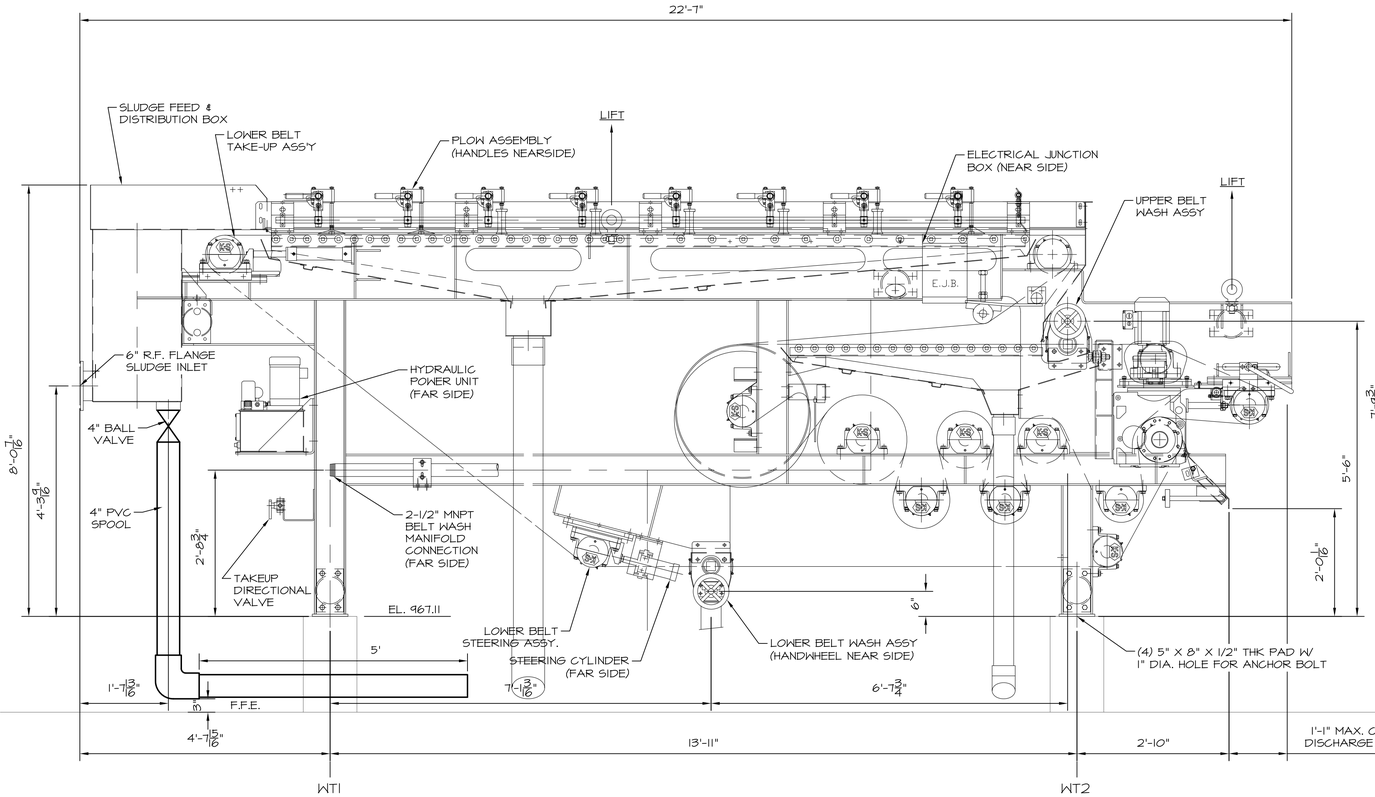

ELEVATION VIEW

SCALE: 3/4" = 1'-0"

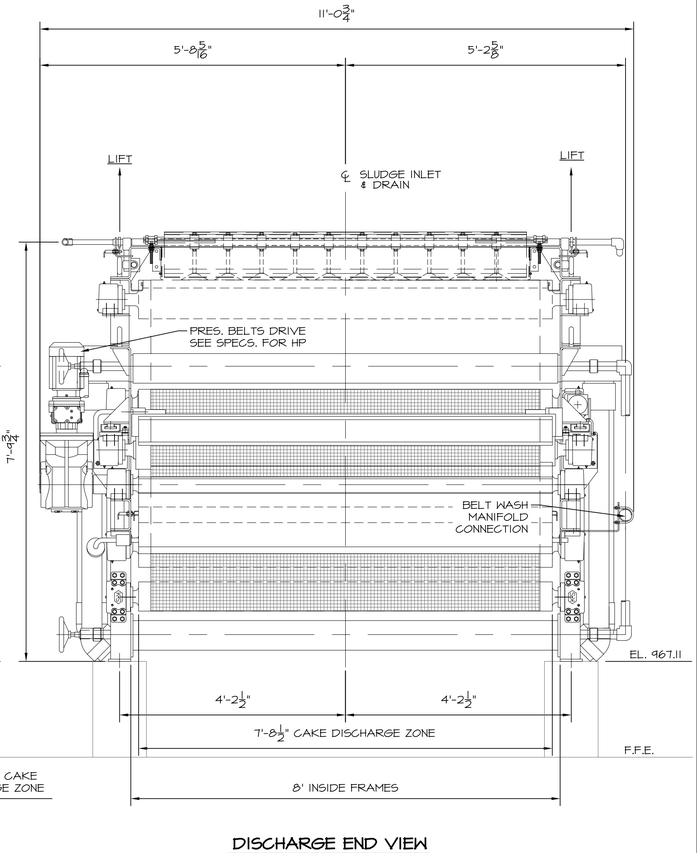

DISCHARGE END VIEW

SCALE: 3/4" = 1'-0"

LOAD TABLE

NET WT.	LOADED GROSS WT.	LOADED WT1 NEAR SIDE	LOADED WT1 FAR SIDE	LOADED WT2 NEAR SIDE	LOADED WT2 FAR SIDE
22,100 LBS.	23,400 LBS	4,200 LBS.	4,200 LBS.	7,500 LBS.	7,500 LBS.

NOTE:

1. ALL BELT PRESS DRAINS TO BE EXTENDED TO CENTER OF DRAIN (SCH-80 PVC OF MATCHING SIZE)

REGISTERED PROFESSIONAL ENGINEER
06/14/22
BRANDON WALL
21108
OKLAHOMA

WALL ENGINEERING
223 N. WASHINGTON AVE., DURANT, OK 74701
OKLAHOMA CA #5413 EXP. JUNE 30, 2023

SUBMITTAL / REVISIONS:

DATE	BY	SUBMITTAL / REVISION
03/22	JR	ODEQ SUBMITTAL
06/22	JR	ISSUED FOR BIDDING

SHAWNEE MUNICIPAL AUTHORITY
WASTEWATER SYSTEM IMPROVEMENTS
CONTRACT DOCUMENTS VOL. 4 OF 6 - NORTHSIDE WWTP

SLUDGE HANDLING FACILITY
BELT FILTER PRESS ELEVATION VIEWS

PROJECT NO.	SHN-20-01
DATE	06/22
DRAWN BY:	JR
CHECKED BY:	BW
REVIEWED BY:	DBW
SCALE:	3/4"=1-0"

BAR IS ONE INCH ON ORIGINAL DRAWING
0" 1"
IF NOT ONE INCH ON THIS SHEET, ADJUST SCALES ACCORDINGLY

SHEET

SHF-7

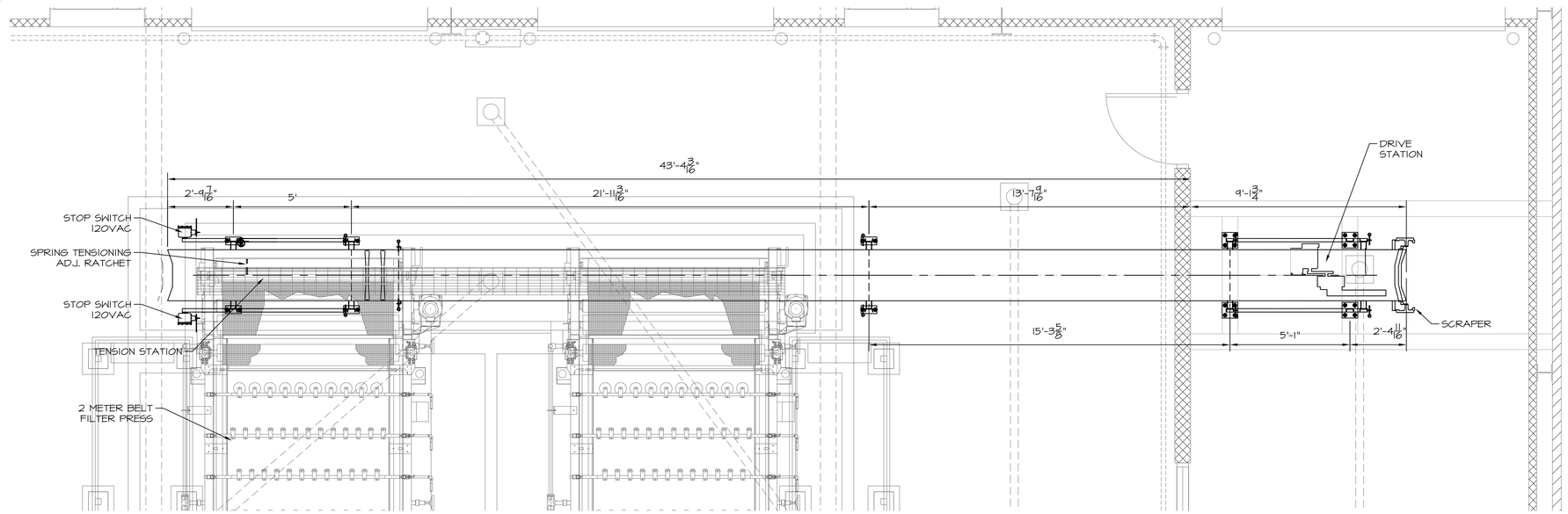

CONEYOR PLAN VIEW

SCALE: 3/8"=1'-0"

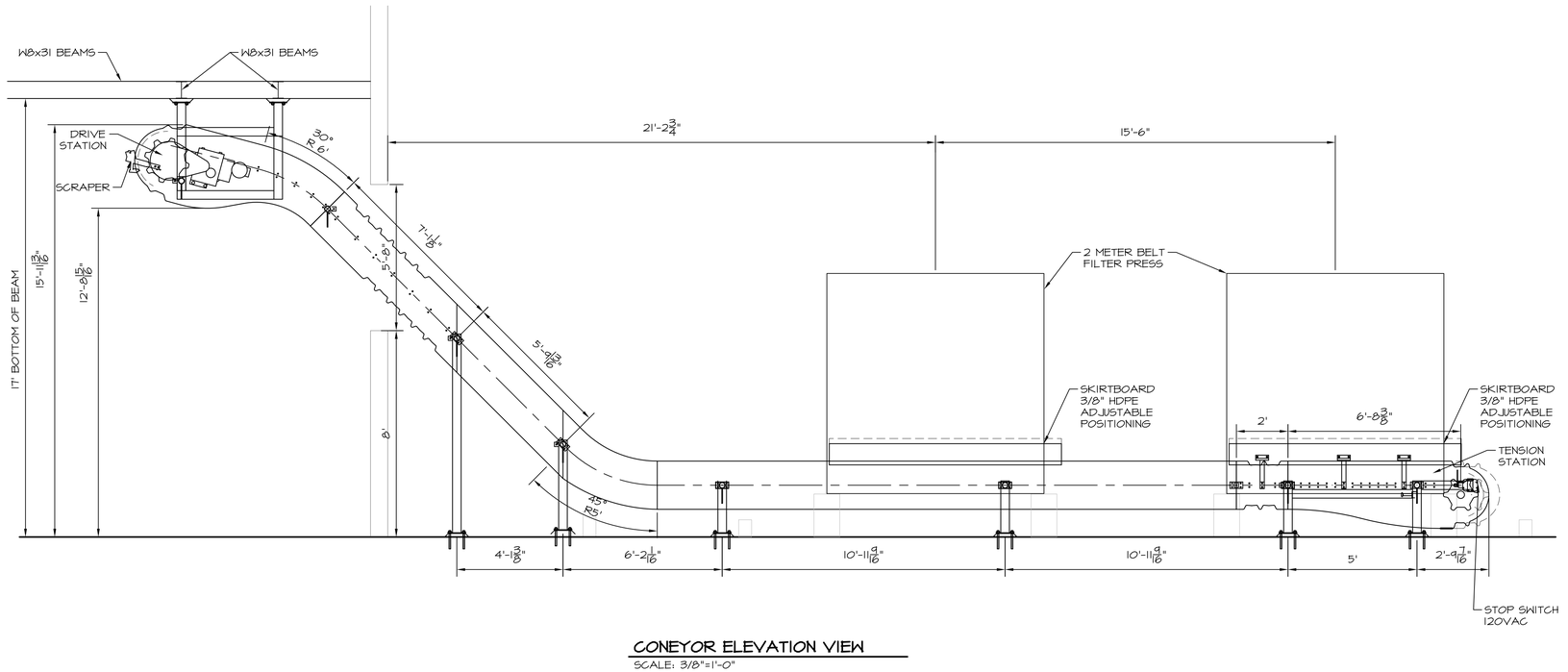

CONEYOR ELEVATION VIEW

SCALE: 3/8"=1'-0"

NOTES:

1. EXACT LOCATION OF CONVEYOR TO BE COORDINATED WITH BELT FILTER PRESS SUPPLIER PRIOR TO PLACEMENT.
2. CONVEYOR OPENING TO BE COVERED WITH A CLEAR HANGING SECTIONAL CLEAR PLASTIC SHROUD TO ASSIST IN MINIMIZING VENTING. SIZING OF SHROUDING SHALL BE FIELD DETERMINED.
3. EXACT PLACEMENT OF CONVEYOR BENEATH BELT FILTER PRESS DISCHARGE TO BE COORDINATED AND VERIFIED BY PRESS SUPPLIER PRIOR TO PLACEMENT.

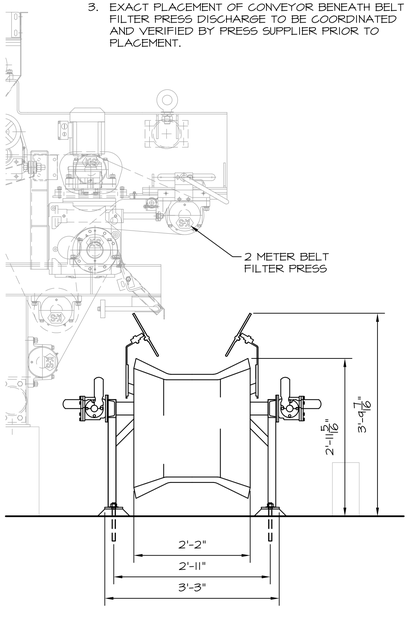

CONVEYOR END VIEW

SCALE: 3/4" = 1'-0"

REGISTERED PROFESSIONAL ENGINEER
BRANDON WALL
21108
OKLAHOMA
06/24/22

WALL ENGINEERING
223 N. WASHINGTON AVE. DURANT, OK 74701
OKLAHOMA CA #5413 EXP. JUNE 30, 2023

SUBMITTAL / REVISIONS:

DATE	BY	SUBMITTAL / REVISION
03/22	JR	ODEQ SUBMITTAL
06/22	JR	ISSUED FOR BIDDING

SHAWNEE MUNICIPAL AUTHORITY
WASTEWATER SYSTEM IMPROVEMENTS
CONTRACT DOCUMENTS VOL. 4 OF 6 - NORTHSIDE WWTP

SLUDGE HANDLING FACILITY
CONVEYOR PLAN AND ELEVATIONS

PROJECT NO.	SHN-20-01
DATE	06/22
DRAWN BY:	JR
CHECKED BY:	BW
REVIEWED BY:	DBW
SCALE:	1/4"=1'-0"

BAR IS ONE INCH ON ORIGINAL DRAWING
0" 1"
IF NOT ONE INCH ON THIS SHEET, ADJUST SCALES ACCORDINGLY

SHEET

SHF-8

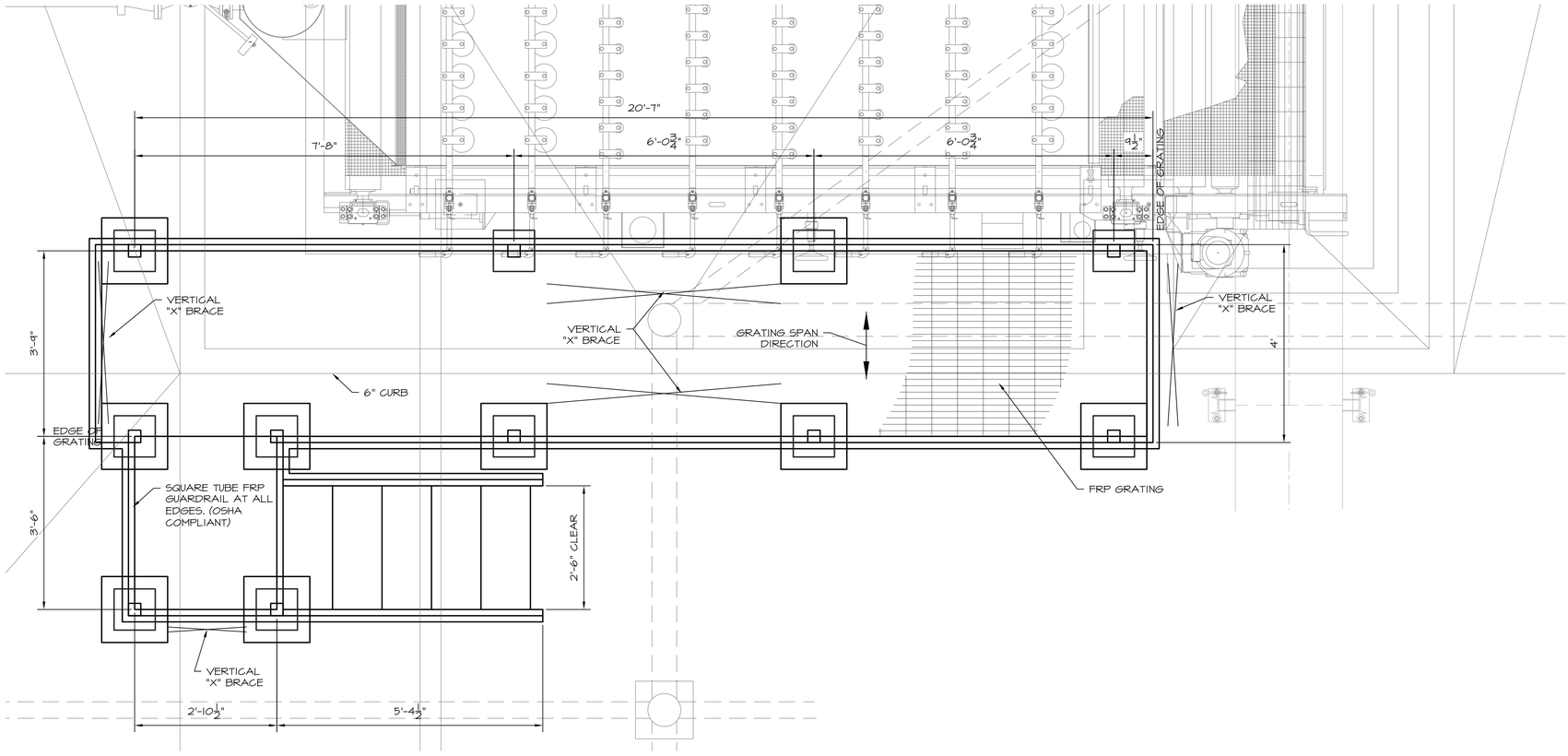



NOTES:

1. ALL FRAMING MEMBERS SHALL BE FRP CHANNELS ALL COLUMNS SHALL BE 3" FRP TUBES (MIN).
2. SUPPLIER OF FRP WALKWAY SHALL DESIGN ALL MEMBER SIZES AND DETAIL ALL CONNECTIONS.
3. DESIGN LOADS: (GRATING AND FRAME)
   A. 100 PSF UNIFORM OR 300# CONCENTRATED LOAD PER LINEAL FOOT AT MIDSPAN (MAXIMUM).
   B. MAXIMUM DEFLECTION = 0.25 INCHES.
   C. FACTOR OF SAFETY:
      BENDING = 3.0
      SHEAR = 4.0
      COMPRESSION = 3.0
      CONNECTIONS = 4.0
4. ALL FASTENERS SHALL BE GALVANIZED STEEL.
5. WALKWAY GRATING TO BE REMOVABLE IN 6 FOOT NOMINAL LENGTH SECTIONS. REMAINING STRUCTURE TO BE STABLE AND USABLE UNDER FULL LIVE LOAD.
6. WALKWAY SUBMITTAL SHALL BE STAMPED BY A PROFESSIONAL ENGINEER LICENSED IN OKLAHOMA.
7. SIZING IS FOR REFERENCE ONLY & MAY BE MODIFIED DURING STRUCTURAL DESIGN

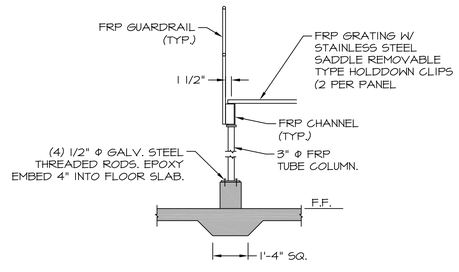

SECTION THRU ELEVATED WALKWAY
N.T.S.

WALL ENGINEERING
223 N. WASHINGTON AVE. DURANT, OK 74701
OKLAHOMA CA #5413 EXP. JUNE 30, 2023

SUBMITTAL / REVISIONS:

DATE	BY	SUBMITTAL / REVISION
03/22	JR	ODEQ SUBMITTAL
06/22	JR	ISSUED FOR BIDDING

SHAWNEE MUNICIPAL AUTHORITY
WASTEWATER SYSTEM IMPROVEMENTS
CONTRACT DOCUMENTS VOL. 4 OF 6 - NORTHSIDE WWTP

SLUDGE HANDLING FACILITY
WALKWAY PLAN AND DETAILS

PROJECT NO.
SHN-20-01
DATE
06/22
DRAWN BY:
JR
CHECKED BY:
BW
REVIEWED BY:
DBW
SCALE:
AS NOTED

BAR IS ONE INCH ON ORIGINAL DRAWING
0" 1"
IF NOT ONE INCH ON THIS SHEET, ADJUST SCALES ACCORDINGLY

SHEET
SHF-9

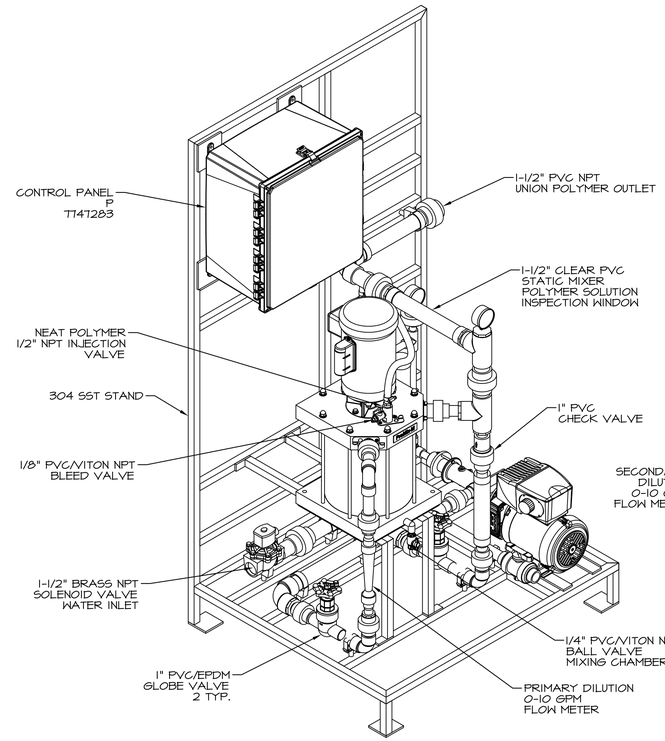

LEFT ISOMETRIC VIEW

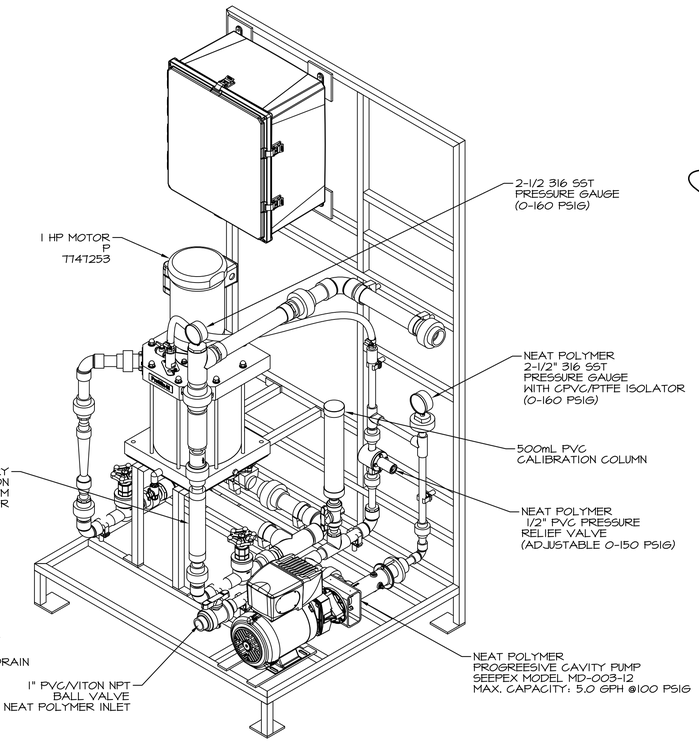

RIGHT ISOMETRIC VIEW



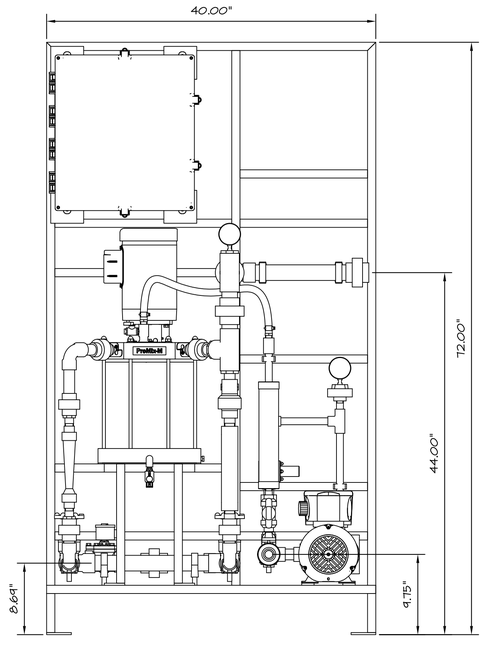

FRONT VIEW

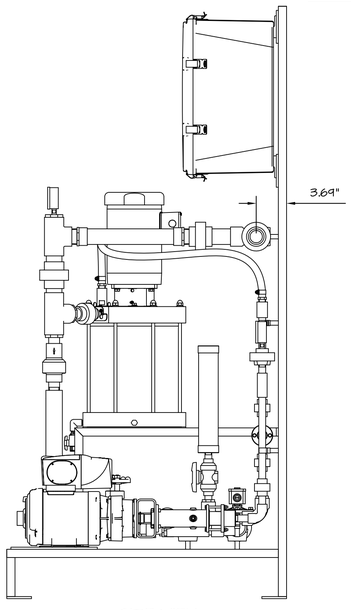

SIDE VIEW

NOTE:
CONTRACTOR TO FURNISH 1-RIGHT OUTLET POLYMER SYSTEM SKID AND 1-LEFT OUTLET POLYMER SYSTEM SKID WITH SPARE PARTS AS OUTLINED IN THE SPECIFICATIONS.

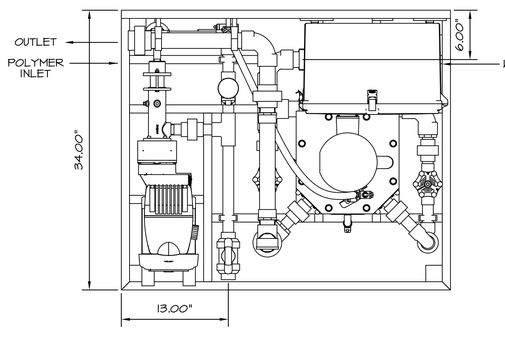

LEFT OUTLET PLAN VIEW

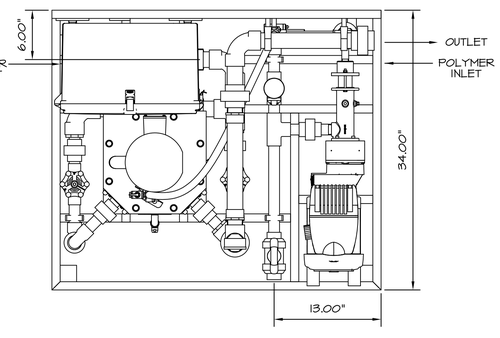

RIGHT OUTLET PLAN VIEW

WALL ENGINEERING
223 N. WASHINGTON AVE. DURANT, OK 74701
OKLAHOMA CA #5413 EXP. JUNE 30, 2023

SUBMITTAL / REVISIONS:

DATE	BY	SUBMITTAL / REVISION
03/22	JR	ODEQ SUBMITTAL
06/22	JR	ISSUED FOR BIDDING

SHAWNEE MUNICIPAL AUTHORITY
WASTEWATER SYSTEM IMPROVEMENTS
CONTRACT DOCUMENTS VOL. 4 OF 6 - NORTHSIDE WWTP

SLUDGE HANDLING FACILITY
POLYMER FEED SYSTEM DETAIL

PROJECT NO.	SHN-20-01
DATE	06/22
DRAWN BY:	JR
CHECKED BY:	BW
REVIEWED BY:	DBW
SCALE:	1/2"=1'-0"

BAR IS ONE INCH ON ORIGINAL DRAWING
0" 1"
IF NOT ONE INCH ON THIS SHEET, ADJUST SCALES ACCORDINGLY

SHEET
SHF-10

SHEET INDEX

SHEET	TITLE	REV
ARCHITECTURAL		
A101	INDEX / GENERAL NOTES / SPECIFICATIONS	
A102	ARCHITECTURAL SPECIFICATIONS	
A103	ARCHITECTURAL SPECIFICATIONS	
A104	ARCHITECTURAL SPECIFICATIONS	
A105	LIFE SAFETY INFORMATION	
A106	LIFE SAFETY PLAN	
A201	REFERENCE FLOOR PLAN	
A202	DIMENSION FLOOR PLAN	
A301	REFLECTED CEILING PLAN	
A302	ROOF PLAN	
A401	BUILDING ELEVATIONS	
A402	DOOR & WINDOW ELEVATIONS	
A501	BUILDING SECTIONS	
A502	WALL SECTIONS	
A503	WALL SECTIONS	
A504	WALL SECTIONS	
A601	INTERIOR ELEVATION	
A602	MILLWORK ELEVATION	
A603	MILLWORK SECTION	
A701	FINISH PLAN / ROOM FINISH SCHEDULE & LEGEND	
STRUCTURAL		
S101	GENERAL NOTES	
S102	SPECIAL INSPECTION NOTES	
S201	FOUNDATION PLAN	
S301	FOUNDATION DETAILS	
S302	FOUNDATION DETAILS	
S401	ROOF FRAMING PLAN	

ABBREVIATIONS (ARCH)

' = FOOT
" = INCHES
@ = AT

A/C = AIR CONDITIONING
ADA = AMERICANS WITH DISABILITIES ACT
AFF = ABOVE FINISH FLOOR
AL = ALUMINUM
ALT = ALTERNATE
APPROX = APPROXIMATELY
ARCH = ARCHITECTURAL

BD = BOARD
BLDG = BUILDING
BOT = BOTTOM
BRG = BEARING
BUR = BUILT-UP ROOFING

C.C. = CENTER TO CENTER
C.G. = CORNER GUARD
C.J. = CONTROL JOINT
CLG = CEILING
CMU = CONCRETE MASONRY UNIT
COL = COLUMN
CONC = CONCRETE
CONST = CONSTRUCTION
CONT = CONTINUOUS
CONTR = CONTRACTOR
CT = CERAMIC TILE
CW = COLD WATER
CY = CUBIC YARD

DEMO = DEMOLITION
DF = DRINKING FOUNTAIN
DIA = DIAMETER
DIM = DIMENSION
DIV = DIVISION
DL = DEAD LOAD
D.S. = DOWNSPOUT
DTL = DETAIL
DWG = DRAWING

EA = EACH
EIFS = EXTERIOR INSULATION FINISH SYSTEM
E.J. = EXPANSION JOINT
ELEC = ELECTRICAL
ELEV = ELEVATION
EQ = EQUAL
EQUIP = EQUIPMENT
EXIST = EXISTING
EXP = EXPANSION
E.W. = EACH WAY

F/A = FIRE ALARM
FACP = FIRE ALARM CONTROL PANEL
FD = FLOOR DRAIN
FEC = FIRE EXTINGUISHER IN CABINET
FF = FINISH FLOOR
FIN FLR = FINISH FLOOR
FLR = FLOOR
FTG = FOOTING
FURR = FURRING
F/S = FIRE SPRINKLER

GA = GAUGE
GALV = GALVANIZED
GB = GRAB BAR
GC = GENERAL CONTRACTOR
GND = GROUND
GYP BD = GYPSUM BOARD

HB = HOSE BIB
H.C. = HANDICAP
HORIZ = HORIZONTAL
H.M. = HOLLOW METAL
HT = HEIGHT
HVAC = HEATING VENTILATION & AIR CONDITIONING
HW = HOT WATER

INSUL. = INSULATION
INT = INTERIOR

JAN = JANITOR
JST = JOIST
JT = JOINT

LAM = LAMINATED
LAV = LAVATORY
LL = LIVE LOAD
LT = LIGHT

MANUF = MANUFACTURER
MAX = MAXIMUM
M.B.M. = METAL BUILDING MANUFACTURER
MECH = MECHANICAL
MH = MANHOLE
MIN = MINIMUM
MISC = MISCELLANEOUS
MS = MOP SINK
MTL = METAL

N.I.C. = NOT IN CONTRACT
NTS = NOT TO SCALE

O.C. = ON CENTER
OPP = OPPOSITE

PART = PARTITION
P.LAM. = PLASTIC LAMINATE
PRKG = PARKING
PREFAB = PREFABRICATED
PREFIN. = PREFINISHED
PT = PAINT

R = RADIUS
RA = RETURN AIR
RD = ROOF DRAIN
RE = REFER
REF / RE = REFERENCE / REFER TO
REINF = REINFORCING
REQ'D = REQUIRED
REV = REVISION
ROW = RIGHT OF WAY
RTU = ROOF TOP UNIT

SCHED = SCHEDULE
SCW = SOLID CORE WOOD
SD = SOAP DISPENSER
SF = SQUARE FEET
SHT = SHEET
SIM = SIMILAR
SPECS = SPECIFICATIONS
STL = STEEL
STOR = STORAGE
STRUCT = STRUCTURAL
SUSP = SUSPENDED
SY = SQUARE YARD

T.C. = TOP OF CURB
TEMP = TEMPERATURE
T.O.S. = TOP OF STEEL
T.O.P. = TOP OF PLATE
T.O.W. = TOP OF WALL
TYP. = TYPICAL
TV = TELEVISION

UNO = UNLESS NOTED OTHERWISE

VCT = VINYL COMPOSITION TILE
VERT = VERTICAL

W/ = WITH
W/O = WITHOUT
WD = WOOD
WC = WATER CLOSET
WH = WATER HEATER
WP = WATERPROOFING

SYMBOL LEGEND

WALL & BUILDING SECTION REFERENCE (DETAIL NUMBER ? / SHEET NUMBER A???)

EXTERIOR ELEVATION REFERENCE (DETAIL NUMBER X / SHEET NUMBER AX)

ENLARGED PLAN REFERENCE (DETAIL NUMBER X / SHEET NUMBER AX)

INTERIOR & MILLWORK ELEVATION REFERENCE (DETAIL NUMBER X/AX / SHEET NUMBER)

DRAWING SHEET REFERENCE (DETAIL NUMBER RE: A/A101 / SHEET NUMBER)

ROOM NAME & ROOM NUMBER (ROOM NAME / 101)

DOOR SCHEDULE REFERENCE (01)

WINDOW SCHEDULE REFERENCE (A)

CEILING HEIGHT REFERENCE (9'-0")

REVISION SYMBOL (1)

COLUMN GRID REFERENCE (1)

ELEVATION SYMBOL

DEMOLITION NOTE REFERENCE (1)

EQUIPMENT ITEM REFERENCE (001)

A.D.A. TURNING SPACE AREA (S)

GENERAL NOTES:

1. DO NOT SCALE THESE DRAWINGS AS PRINTING AND REPRODUCTION MAY ALTER THE SCALE SLIGHTLY. NOTIFY THE ARCHITECT WITH ANY DISCREPANCIES.

2. CONSTRUCTION SHALL COMPLY WITH ALL LOCAL, STATE, AND NATIONAL CODES AND AGENCIES WHICH GOVERN THE WORK TO BE PERFORMED.

3. THE CONTRACTOR SHALL OBTAIN AND PAY ALL NECESSARY PERMITS AND FEES TO COMPLETE CONSTRUCTION TO INCLUDE TAPS FEES, METER CHARGES, AND UTILITY FEES ASSOCIATED WITH THE PROJECT.

4. CONSTRUCTION SHALL BE A.D.A. COMPLIANT WITH THE AMERICANS WITH DISABILITIES ACT AND STANDARDS FOR ACCESSIBLE AND USABLE BUILDINGS AND FACILITIES (ICC A117.1).

5. LEAD-BASED PAINT OR ASBESTOS CONTAINING MATERIAL SHALL NOT BE USED IN CONSTRUCTION FOR THIS PROJECT.

6. APPLICABLE CODES:
   2015 INTERNATIONAL BUILDING CODE
   2015 INTERNATIONAL FIRE CODE
   2015 INTERNATIONAL MECHANICAL CODE
   2015 INTERNATIONAL PLUMBING CODE
   2014 NATIONAL ELECTRICAL CODE

7. REFERENCED CODE:
   2015 NFPA 101 LIFE SAFETY CODE

ARCHITECTURAL SPECIFICATIONS:

CAST-IN-PLACE CONCRETE:

A. Testing: One set of test cylinders shall be prepared by an ACI Certified Technician according to ACI standards of any concrete placed during any one day. For each test make four (4) cylinders from same batch. Cylinders shall be field cured and protected for two (2) days then remove to testing laboratory. Break cylinders as follows: one at seven (7) days and two (2) at twenty-eight (28) days. Break the fourth cylinder only if tests do not indicate required strength. Instruct testing lab to immediately forward test results by fax to Architect. Note: required strength at seven days to be at least 65% of ultimate strength specified or 1950 psi for 3,000 psi concrete mix and 2,275 psi for 3,500 psi design mix.

B. Formwork:
   i. Provide concrete forms, accessories, shoring, and bracing as required to accomplish cast-in-place concrete work.
   ii. Design and construct to provide resultant concrete that conforms to design with respect to shape, lines, and dimensions.
   iii. Curb Forming: Provide reinforced section as indicated on Drawings.
   iv. Form Materials: choice of standard products with sufficient strength to withstand hydrostatic head without distortion in excess of permitted tolerances.

C. Reinforcement:
   i. Reinforcing steel shall be ASTM A 615/A 615M Grade 60 (420).
      a. Type: Deformed billet-steel bars.
      b. Finish: Unfinished, unless otherwise indicated.
   ii. Reinforcing steel shall be free of rust, scale, grease, paint or other defects which may destroy or reduce bond. Bars to be free of seams, slivers, flaws and other defects affecting continuity or strength.
   iii. Reinforcement Accessories:
      a. Tie Wire: Annealed, minimum 16 gage.
      b. Chairs, Bolsters, Bar Supports, Spacers: Sized and shaped for adequate support of reinforcement during concrete placement.

D. Concrete Materials:
   i. Cast-In-Place Concrete: All concrete shall be ready-mixed and delivered according to "Specifications for Ready-Mixed Concrete" (ASTM C94, latest revision).
   ii. Materials: Crushed rock 3/4" to 1-1/2" in accordance to ASTM C33, latest revision. Portland Cement Type 1, ASTM C150, latest revision, minimum of 5-1/2 sacks per cubic yard. Comply with requirements of ASTM C494, latest revision, Type "A".
   iii. Mixing: Water-to-cement proportions to obtain a 28 day break at least 3,500 psi for exterior paving and curbs. Slump to be 4" maximum.
   iv. Concrete: (S) Concrete strength for drives and curbs, use 3,500 psi in 28 days. Use air entrainment admixture additive to each cubic yard of concrete for paving, drives, curbs, sidewalks and at any other miscellaneous exterior concrete work.
   v. Concrete Mix: (S) Use mixing proportions to obtain ASTM C-94 that will assure a 28 day break at design strength for all new concrete work. See structural drawings for additional information. Materials for mixes in one cubic yard is as follows:
      a. 3,500 psi in 28 days Mix Design per Yard
      b. Cement - 5.5 sack minimum (as required for 3500 psi)
      c. Fly Ash - 15% (max) Class "C"
      d. Sand and Gravel - Weight proportion
      e. Water/Cement Ratio - not to exceed 0.55 (as required for 3500 psi)
      f. Maximum Slump - 5"
      g. Air Entrainment - 5% to 7%
      h. Water Reducing Agent - As per manufacturer's specs (not to exceed 7" slump)
      i. Note: Calcium chloride shall not be used

E. Accessory Materials:
   i. Construct forms to withstand deflection, movement and/or leakage. Forms to be cleaned, reconditioned and recoated with non-staining form release agent prior to each use. Unused tie holes in forms should be properly plugged and filled to prevent telegraphing. Form construction method must be sufficient in stability and strength to result in a smooth and even exposed concrete face after stripping.
   ii. Curb Forming: Forming for curbs shall be a smooth rounded radius to the dimensions shown. Segmented connection of straight-line forming at curbs will not be accepted.
   iii. Do not remove forms or bracing until concrete has gained sufficient strength to carry its own weight and imposed loads.
   iv. Formwork: Comply with requirements of ACI 301. Design and fabricate forms to support all applied loads until concrete is cured, and for easy removal without damage to concrete.
   v. Verify that anchors, anchor bolts, seats, plates, reinforcement and other items to be cast into concrete are accurately placed, positioned securely, and will not cause hardship in placing concrete. Embedments must be supported by formwork or tied to reinforcement. Under no circumstances should embedments be welded to reinforcement.

F. Concrete Moisture Vapor Reduction Admixture:
   i. Basis-of-Design "Barrier One High Performance Moisture Vapor Reduction Admixture" manufactured by Barrier One, Inc..; 522 S. Hunt Club Blvd., #303, Apopka, Florida 32703; Contact Manufacturer's representative: P: 877.224.5850, F: 866.594.3490 or Email at: info@barrierone.com or equal.
   ii. Concrete moisture vapor reduction admixture (MVRA) for all interior slab (on ground and elevated) and structural roof deck construction shall be a non-toxic, liquid admixture that is free of all volatile organic compounds (VOC). It shall be specifically designed to have a natural chemical reaction with pre-existing elements inside the concrete to eliminate the route of moisture vapor emission through the slab by restricting the integral capillary system. Chemical reaction shall form a permanent barrier (capillary break) that is integral to the concrete, insoluble, and irremovable.
      1. Hydraulic conductivity: Project specific maximum of 6.0 E-8 cm/s per ASTM D5084
      2. Toxicity: None
      3. Odor: None
      4. Flammability: None
      5. VOC levels: zero
      6. Solvent: water
      7. Freeze Temp: 32 degrees Fahrenheit (0°C) (store above 36° F (2.3° C))
      8. Acid resistance: Excellent
      9. Hazardous vapors: None
      10. Installation: All concrete
      11. Capillary break: Calcium Silicate Hydrate
      12. pH: 11.3
      13. weight: 10.3 lbs/gal (net)
      14. Integral biocide to inhibit growth of mold and bacteria

CONCRETE MASONRY UNITS:

A. Concrete Masonry Units (CMU): Architectural grade, load bearing ASTM C90, Type-1, Grade N-1, with integral water repellent admixture.
   i. Units shall be uniform in all directions with texture straight and free from cracks, spalls, and other defects. Do not use damaged, cracked, or otherwise defaced masonry units.
   ii. Face Dimensions: Concrete Masonry Units nominal sizes are as follows: Nominal 4"x8"x16" and 8"x8"x16".
   iii. Shapes: Provide all shapes as shown on the Plans.

CONCRETE MASONRY UNITS (CONTINUED):

   iv. Concrete blocks shall be cured by the auto-claved method, conforming to ASTM C-331.
B. Mortar Components:
   i. Masonry Cement: Shall conform to ASTM Spec. C-91, Type II.
   ii. Portland Cement: Shall conform to ASTM Spec. C-150, Type I, natural colors.
   iii. Hydrated Lime: Shall coform to ASTM Spec. C-207 and be equal to Type S.
   iv. Sand: Clean natural colored sand conforming to ASTM Spec C-144.
   v. Mixing Water: Water must be clean and potable.
   vi. Pigmented Color Additive shall meet or exceed ASTM C-979.
C. Mortar: Shall conform to ASTM spec. C-270. Submit colors for selection.
D. Grout: Shall conform to ASTM spec. C-476.
E. Anchors and Accessories:
   i. Provide masonry wall ties, reinforcing and accessories as specified herein or as required by work conditions.
   ii. Brick ties shall be 22 gauge galvanized corrugated steel ties that attach to the building structure and permit differential movement between masonry and building structure.
   iii. Ties shall be sized to provide not more than 1" and not less than 1/2" of mortar coverage from masonry face.
F. Cleaner: "Sure Klean" as manufactured by PROCESS SOLVENT CO, INC approved equal or as recommended by masonry manufacturer.
G. Topical Water Repellent: Use CHEMICAL PRODUCTS COMPANY "CP-500" chemical water repellent or approved equal.

CULTURED STONE:

A. Manufacturers: Stone product and materials shall be equal to CORONADO "Freedom Building Stone" series.
B. Stone Materials:
   i. Portland Cement: ASTM C150 Type 1, 2, or 3 depending upon color to be produced.
   ii. Course Aggregates: ASTM C330 lightweight type, color as necessary to obtain final color stone.
   iii. Sand: ASTM C144, special color if required to match approved samples.
   iv. Water: Clean and free of deleterious substances.
C. Building Stone:
   i. Standard Colors: Alamo Sands, Bunker Hill, Independence Blend, Kings Mountain, Liberty Brown, Patriot Blend, Providence, Texas Cream, Yorktown, or any custom color.
   ii. Grout Joint Width: Standard 1/2" average grout joint or varies from 3/8" - 3/4" average grout joint.
   iii. Grouting Options: Deep raked, full brushed, full smooth tooled, overgrout, or rough brushed.
   iv. Grout Joint Color: Natural Grey or complementary color.
   v. Accessories: Complementary Tiles, Wall Caps, Post Caps and more.
   vi. Size: Stone sizes are 3', 6", 9", and 12" (1-1/2" to 8") in height and range from 3" to 21" in length (nominal). The small size ashlar pattern includes a higher ratio of pieces 6" in height.
   vii. Thickness: 3" (1-1/2" to 1-5/8") nominal.
   viii. Weight: 18 to 22 lbs per square foot.
   ix. Packaging: Available in big boxes (70sf flats).
D. Mortar shall be composed of Cement: ASTM C150, Type I or masonry cement meeting ASTM C91; Masonry sand, complying with ASTM C144, natural or manufactured; Pigments meeting ASTM C979 mineral oxide type.

COLD FORMED METAL FRAMING:

A. Manufacturer: Dietrich Metal Framing www.dietrichindustries.com.
B. Framing System: Provide framing members, bridging, bracing, plates, gussets, clips, fittings, reinforcement, and fastening as required to provide a complete system.
C. Framing Materials:
   i. Studs and Track: non-structural metal framing: Comply with ASTM C645. Use 20 gauge wall framing equal to ProSTUD drywall stud system. Install lateral bracing for all walls of 10'-0" in height or taller. Install 18 gauge studs at fire rated wall.
   ii. Joists and Purlins: Fabricated from ASTM A653/A653M steel sheet, with G90/Z275 hot dipped galvanized coating.
   iii. Framing Connectors: Factory-made formed steel sheet, ASTM A653/A653M SS Grade 50, with G60/Z180 hot dipped galvanized coating and factory punch holes.
   iv. Install lateral bracing in non-load bearing walls at 4'-0" o.c. for walls 10' in height or taller.
   v. Install UL listed assemblies where shown on drawings.
D. Accessories: Formed sheet steel, thickness determined for conditions encountered and finish to match framing components.
E. Fasteners:
   i. Self-Drilling, Self-Tapping Screws, Bolts, Nuts, and Washers: hot dipped galvanized per ASTM A153/A153M.
   ii. Power Activated Anchorage Devices.

ROUGH CARPENTRY:

A. Provide framing and blocking members as indicated or as required to support finishes, fixtures, specialty items, and trim.
B. In metal stud walls, provide continuous blocking around door and window openings for anchorage of frames, securely attached to stud framing.
C. In walls, provide blocking attached to studs as backing and support for wall-mounted items, unless item can be securely fastened to two or more studs or other method of support is explicitly indicated.

FINISH CARPENTRY:

1. PLASTIC LAMINATE-FACED ARCHITECTURAL CABINETS
   A. Quality Standard: Unless otherwise indicated, comply with the "Architectural Woodwork Standards" for grades of architectural plastic-laminate cabinets indicated for construction, finishes, installation, and other requirements.
      1. Grade: Custom
      2. Type of Construction: Face Frame
      3. Cabinet, Door and Drawer Front Interface Style: Flush overlay
   B. High-Pressure Decorative Laminate: NEMA LD 3, grades as indicated or if not indicated, as required by woodwork quality standard.
      1. Basis-of-Design Product: Subject to compliance with requirements, provide Wilsonart LLC; Decorative Plastic Laminates or a comparable product.
   C. Laminate Cladding for Exposed Surfaces: (including countertops)
      1. Horizontal Surfaces: Grade HGS.
      2. Postformed Surfaces: Grade HGP.
      3. Vertical Surfaces: Grade HGS.
      4. Edges: ABS/PVC extruded fabrication.
   D. Materials for Semiexposed Surfaced:
      1. Surfaces Other Than Drawer Bodies: High-pressure decorative laminate, NEMA LD 3, Grade VGS.
         a. Edges of Plastic-Laminate Shelves: ABS/PVC extruded fabrication.
         b. For semiexposed backs of panels with exposed plastic-laminate surfaces, provide surface of high-pressure decorative laminate, NEMA LD 3, grade VGS.
      2. Drawer Sides and Backs: Thermoset decorative panels with ABS/PVC extrusion banding.
      3. Drawer Bottoms: Thermoset decorative panels.
   E. Concealed Backs of Panels with Exposed Plastic-Laminate Surfaces: High-pressure decorative laminate, NEMA LD 3, Grade BKL.
   F. Drawer Construction: Fabricate with exposed fronts fastened to subfront with mounting screws from interior of body.
      1. Join subfronts, backs, and sides with glued rabbeted joints supplemented by mechanical fasteners.
   G. Colors, Patterns, and Finishes: Provide materials and products that result in colors and textures of exposed laminate surfaces complying with the following requirements:
   H. Wood Products: Provide materials that comply with requirements of referenced quality standard for each type of woodwork and quality grade specified unless otherwise indicated.
      1. Wood Moisture Content: 5 to 10 percent.
   I. Composite Wood Products: Products shall be made without urea formaldehyde.
      1. Medium-Density Fiberboard: ANSI A208.2, Grade 130
      2. Particleboard: ANSI A208.1, Grade M-2.
      3. Particleboard: Straw-based particleboard complying with requirements in ANSI A208.1, Grade M-2, except for density.
         a. Manufacturers: Subject to compliance with requirements, provide products by one of the following:
            1) Environ Biocomposites Manufacturing LLC.
            2) Sorm Incorporated.
      4. Softwood Plywood: DOC PS 1, medium-density overlay.
      5. Thermoset Decorative Panels: Particleboard or medium-density fiberboard finished with thermally fused, melamine-impregnated decorative paper and complying with requirements of NEMA LD 3, Grade VGL, for test methods 3.3, 3.4, 3.6, 3.8, and 3.10.
         a. Basis-of-Design Product: Subject to compliance with requirements, provide Wilsonart Thermally Fused Laminate Panels or an approved equal.
   J. Cabinet Hardware: Provide cabinet hardware and accessory materials associated with architectural cabinets except for items specified in Section 08 71 00 "Door Hardware (Descriptive Specification)."
      1. Butt Hinges: 2-3/4-inch, five-knuckle steel hinges made from 0.095-inch- thick metal, and as follows:
         a. Semiconcealed Hinges for Flush Doors: BHMA A156.9, B01361.
      2. Wire Pulls: Back mounted, solid metal, 5/16 inch in diameter, 5 inches long, 2-1/2 inches deep, and 5/16 inch in diameter.
      3. Catches: Magnetic catches, BHMA A156.9, B03141.

(ARCHITECTURAL SPECIFICATIONS CONTINUE ON SHEET A102)

WALL ENGINEERING
PO BOX 1457, DURANT, OK 74702
OKLAHOMA CA #5413 EXP. JUNE 30, 2023

SUBMITTAL / REVISIONS:
DATE | BY | SUBMITTAL / REVISION

CITY OF SHAWNEE
WASTEWATER TREATMENT PLANT IMPROVEMENTS
SHAWNEE, OKLAHOMA

GENERAL NOTES & INDEX

PROJECT NO.
#SH-20-21

DATE
March 11, 2022

DRAWN BY:

CHECKED BY:

REVIEWED BY:

SCALE:

BAR IS ONE HALF INCH ON ORIGINAL DRAWING
0" — 1/2"
IF NOT ONE HALF INCH ON THIS SHEET, ADJUST SCALES ACCORDINGLY

SHEET
A101

STATE OF OKLAHOMA — KYLE E. REDLAND — 4970 — 3/11/22 — REGISTERED LICENSED ARCHITECT

REDLAND CHILDERS ARCHITECTS
413 W. 12th
Ada, OK 74820
p. 580-436-0770
f. 580-436-6320
www.rcada.com

(ARCHITECTURAL SPECIFICATIONS CONTINUED)

FINISH CARPENTRY (CONTINUED):

5. Shelf Rests: BHMA A156.9, B04013; metal.
6. Drawer Slides: BHMA A156.9.
   a. Grade 1 and Grade 2: Side mounted, full-extension; zinc-plated steel with polymer rollers.
   b. Grade 1HD-100 and Grade 1HD-200: Side mounted; full-extension type; zinc-plated-steel ball-bearing slides.
   c. For drawers not more than 3 inches high and not more than 24 inches wide, provide Grade 1.
   d. For drawers more than 3 inches high but not more than 6 inches high and not more than 24 inches wide, provide Grade 1.
   e. For drawers more than 6 inches high or more than 24 inches wide, provide Grade 1HD-100.
7. Door Locks: BHMA A156.11, E07121.
8. Drawer Locks: BHMA A156.11, E07041.
9. Door and Drawer Silencers: BHMA A156.16, L03011.

K. Furring, Blocking, Shims, and Hanging Strips: Softwood or hardwood lumber, kiln dried to less than 15 percent moisture content.

L. Anchors: Select material, type, size, and finish required for each substrate for secure anchorage. Provide metal expansion sleeves or expansion bolts for post-installed anchors. Use nonferrous-metal or hot-dip galvanized anchors and inserts at inside face of exterior walls and at floors.

M. Shop-cut openings to maximum extent possible to receive hardware, appliances, electrical work, and similar items. Locate openings accurately and use templates or roughing-in diagrams to produce accurately sized and shaped openings. Sand edges of cutouts to remove splinters and burrs. For decorative plastic laminates, comply with manufacturer's written fabrication instructions.

2. SOLID SURFACE WINDOW SILL
   A. Acceptable Product: "Wilsonart Solid Surface", or approved equal.
   B. Composition: Acrylic resins, fire-retardant mineral fillers, and proprietary coloring agents. Through-the-body color for full thickness of sheet material.
   C. Material Thickness: 1/2 inch, nominal.
   D. Color, Pattern, and Finish Design: To be selected from manufacturer's standard offerings.
   E. Edge Detail: 1" bullnose as indicated on Drawings.
   F. Siliconized Acrylic Sealant: Siliconized acrylic latex sealant. For general applications to fill gaps between countertops and at terminating substrates. Complies with ASTM C 834, Type OP, Grade NF, and SCAQMD Rule 1168.
      1. Product: "Wilsonart Color Matched Caulk" or approved equal.
      2. Color: Selected from sealant manufacturer's standard offerings.
   G. Construction Adhesive: Countertop manufacturer's recommended silicone-based construction adhesive for backsplashes, endsplashes, and other applications according to manufacturer's published fabrication instructions.

3. CHEMICAL RESISTANT COUNTERTOPS
   A. Manufacturer's shall be equal to Durcon, Incorporated, 206 Allison Drive, Taylor, TX 76574, 512-595-8000, www.durcon,com.
   B. Solid Epoxy Resin:
      1. Sheets cast from modified epoxy resin and non-asbestos inert fillers; compounded mixture cured and thermoset specifically from formulation to provide exceptional physical and chemical resistance required in medium to heavy duty laboratory environments, in accordance with SEFA 3. Sheets to be monolithic throughout without surface coating application,
      2. Color: Black Onyx
   C. Installation Materials: Manufacturer's joint adhesive, panel adhesive, and sealants as required to suit project conditions.

4. FABRICATION
   A. Plastic Laminate-Faced Architectural Cabinets
      1. Sand lightly to remove raised grain on exposed surfaces before fabrication.
      2. Fabricate cabinets to dimensions, profiles, and details indicated.
      3. Complete fabrication, including assembly and hardware application, to maximum extent possible before shipment to Project site. Disassemble components only as necessary for shipment and installation. Where necessary for fitting at site, provide ample allowance for scribing, trimming, and fitting.
   B. Solid Surface Window Sill
      1. Fabricate components in shop, to greatest extent practicable, in sizes and shapes indicated according to approved shop drawings and manufacturer's published fabrication requirements.
      2. Form joint seams between solid surfacing components with specified seam adhesive. Completed joints inconspicuous in appearance and without voids. Provide joint reinforced if required by manufacturer for particular installation conditions.
      3. Provide holes and cutouts indicated on approved shop drawings. Rout cutouts and complete by sanding all edges smooth.
   C. Chemical Resistant Countertops
      1. Fabricated tops and accessories in accordance with manufacturer's recommendations, approved Shop Drawings, and SEFA 3.
      2. Epoxy Resin Countertops:
         a. Thickness: 1-1/4 inches unless otherwise indicated. Check each sheet at factory for required thickness. Maximum variation in thickness: plus or minus 1/16 inch (1.6 mm) from corner to corner.
         b. Warpage: Inspect tops for warpage prior to fabrication by placing on true flat surface. Maximum allowable warpage: 1/16 inch in 36 inch span.
         c. Fabrication: Shop fabricate in longest practical lengths. Bond joints with highly chemical resistant cement with properties and color similar to base material. Finish exposed edges.
         d. Edge treatment: Standard 1/4 inch (2 mm) radius edge.
         e. Corner treatment: exposed corners shall be eased slightly for safety.
         f. Back and end splashes: Supplied loose for field installation. Material thickness of 1" and 4 " high unless otherwise indicated. Top-mounted end splash where countertop abut adjacent construction at and locations indicated on Drawings. Edges to match countertop surface.
         g. Joints: Maximum 1/8 inch, bonded with epoxy grout.
         h. Make joints between two benches level.
         i. Locate joints away from sinks and over or near supports.
         j. Sink cutouts: Routed for under mount sink.
         k. Allowable tolerances: Plus or minus 1/64 inch for each 12 inches of length. Location of cutouts and drilled openings: Plus or minus 1/8 inch of design dimension. Size of cutouts and drilled openings: Plus 1/8 inch or minus 0 inches.

THERMAL INSULATION:

1. BATT INSULATION MATERIALS
   A. Batt Insulation: ASTM C-665, preformed batt, conforming to the following:
      i. Material: Glass fiber.
      ii. Flame Spread Index: 25 or less, when tested in accordance with ASTM E-84.
      iii. Smoke Development Index: 450 or less, when tested in accordance with ASTM E-84.
      iv. Formaldehyde Content: Zero.
      v. Thermal Resistance: R-30 for Ceiling/Roof Deck and R-19 for exterior perimeter walls.
      vi. Thickness: 10" minimum for Ceiling/Roof Deck and 6" minimum for exterior perimeter Walls. New insulation at roof deck shall be banded.
      vii. Facing: Vapor Barrier Face installed on conditioned side of space.

2. BANDED ROOF INSULATION SYSTEM
   A. Install banded roof insulation system at roof deck throughout building.
   B. Roof insulation system shall be a banded roof insulation system using steel straps and fabric supporting batts with an installed total roof insulation R-value of R-30 and an average installed thickness of 9".
   C. Steel strap: Shall be primed and painted "white" on the exposed side and clear coat primer on the unexposed side. Minimum size shall be 0.02"x1" continuous length.
   D. Fasteners: #12 self-drilling screws and washers for fastening to 12 gauge steel. Always install two fasteners in the end of each strap for safety and to withstand installation stress, and on fastener at all other designated fastening points.
   E. Fabric: Shall be woven reinforced high-density polyethylene yarns. The fabric shall be Class A compliant with a low flame spread index of 25. Pieces shall be fabricated to substantially fit the large defined building areas with a minimum practical sealing to be done on job site. Fabric shall be folded to allow for rapid pull-out on the strap support system.
   F. Sealants: Shall be high tack solvent-based vapor barrier sealant for sealing vapor barrier laps.
   G. Insulation: Shall be formaldehyde-free fiberglass blanket or batt insulation.
   H. Insulation Hangers: Shall be insulation hangers for supporting insulation between wall girt or roof purlins in roof pitches noted on drawings.
   I. Finish: Special attention shall be given to exposed ceiling located in the Lobby, Corridors, and Dining Rooms. The Gym ceiling will be exposed to the metal roof deck with rigid insulation on top. The insulation shall have a "shite" finish throughout. The exposed raised Lobby ceiling and Dining shall be painted "white" after miscellaneous devices are installed. All Corridors shall be exposed and painted "black" after miscellaneous devices are installed.

3. BANDED WALL INSULATION SYSTEM
   A. Install banded wall insulation system at exterior perimeter walls throughout building.

THERMAL INSULATION (CONTINUED):

   B. Wall insulation system shall be a metal strap and fabric system with an installed total roof insulation R-value of R-19 and an average installed thickness of 8 inches. A thermal break shall be applied where there is no existing thermal break between metal panel and metal structure. The thermal break shall be 3/16" x 3" foam tape.
   C. Steel strap shall be primed and painted "white" on the exposed side and clear coat primer on the unexposed side. Minimum size shall be 0.02 x 1" continuous length.
   D. Fasteners: #12 self-drilling screws and washers for fastening to 12 gauge steel or heavier gauge steel. Always install two fasteners in the end of each strap for safety and to withstand installation stress, and one fastener at all other designated fastening points.
   E. Fabric: Shall be woven reinforced high-density polyethylene yarns coated with a continuous white film. The fabric shall be Class A compliant with a low flame spread index of 25. Pieces shall be fabricated to substantially fit the large defined building areas with minimum practical sealing to be done on job site. Fabric shall be folded to allow for rapid pull-out on the strap support system.
   F. Sealants: Shall be high tack solvent-based vapor barrier sealant for sealing vapor barrier laps.
   G. Insulation: Shall be formaldehyde-free fiberglass blanket or batt insulation.
   H. Insulation Hangers: Shall be insulation hangers for supporting insulation between wall girt or roof purlins in roof pitches noted on Drawings.

4. SOUND INSULATION
   A. Install sound insulation to perimeter of all Restrooms, Offices, Classrooms, Mechanical and any areas identified on Drawings.
   B. 3.5 inches thick R-11 friction fit sound insulation batts or rock-wool batts having a 49 STC for sound attenuation.

5. CRACKAGE INSULATION
   A. Use two part mutli-purpose polyurethane low-expandable foam insulation similar to a material manufactured by INSTA-FOAM PRODUCTS, (1-800-800-3626). Apply with wand for filling, sealing, and insulating in and around any voids, holes, conduits and/or irregular surfaces that might allow any air infiltration.
   B. Assure continuation and continuity of insulation envelope around total conditioned area. Any uninsulated voids to receive supplemental insulation with materials to assure comparable "R" factor to adjacent areas. Assure insulation of stud wall tees and corners.

JOINT SEALERS:

   A. Sealants are to be used in any areas having cracks, open joints or subject to movement that might permit entry of moisture, dust, air, insects, etc., into building.
      i. Exterior sealants on building materials shall be equal to "Vulkem" one part high performance polyurethane manufactured by MAMECO INTERNATIONAL or a one part polysulfide base sealant equal to CHEM-CALK 100. Color of sealant to match adjacent material color.
      ii. Interior sealant as CHEM-CALK 600 acrylic latex for areas to be painted. Use recommended primer on porous surfaces or where required.
      iii. Use polyethylene foam rope joint backer rod at joints exceeding 1/2" in depth.
      iv. Exterior sealants at concrete shall be one part high performance polyurethane as SONNEBORN "Sonolastics" SL-1 (self-leveling). Color of sealant to match adjacent material color or as approved by Architect.

METAL DOORS & FRAMES:

1. SHOP-APPLIED PAINT
   A. For steel surfaces, use rust-inhibitive enamel or paint, either air-drying or baking, suitable as a base for specified finish paints.

2. FABRICATION, GENERAL
   A. Fabricate steel door and frame units to be rigid, neat in appearance and free from defects, warp or buckle. Wherever practicable, fit and assemble units in manufacturer's plant. Clearly identify items before shipment, to assure proper assembly at project site. Fabricate exposed faces of doors and panels from only cold-rolled steel. Fabricate frames, concealed stiffeners, reinforcement, edge channels, louvers and mouldings from either cold-rolled or hot-rolled steel (at fabricator's option). Fabricate exterior doors and frames from galvanized sheet steel.

3. STANDARD HOLLOW METAL DOORS
   A. Provide metal doors of dimensions indicated on drawings or schedules and complying with SDI-100 for minimum materials and construction requirements. Interior doors shall be full flush face 20 gauge metal doors with honey comb core as shown on drawings, properly reinforced, drilled and tapped for hardware required. Doors shall be delivered to the job, thoroughly cleaned and primered. Exterior doors shall be 16 gauge galvanized steel with foamed in place insulated core with a minimum R-value of 7.
   B. Subject to same requirements as standard hollow metal doors, provide 1-3/4" thick doors, with 16 gauge steel with flush tubular steel tops. Stile to extend the full height of door and rails internally welded or mechanically joined to form a neat seal on the face, similar to CECO DOOR PRODUCTS - "Trulite Series".

4. METAL FRAMES
   A. Provide metal frames of types, styles and dimensions indicated on drawings or schedules and complying with SDI-100 for minimum materials and construction requirements. Furnish 16 gauge steel for interior frames and 14 gauge galvanized steel for exterior frames. Fabricate frames with 5/8" high formed integral stop having 2" wide face and 1/2" return to wall as shown. See Schedule for door frame width. Reinforce strike and hinge plates; factory drill and tap. Use concealed fasteners, unless otherwise indicated. Fabricate frames of welded construction for both exterior and interior applications. All corners are to be mitered with welds ground smooth.

5. FINISH HARDWARE PREPARATION
   A. Prepare hollow metal units to receive mortised and concealed finish hardware, including cutouts, reinforcing, drilling and tapping in accordance with final HARDWARE SCHEDULE in Section 08710 and templates provided by hardware supplier. Reinforce hollow metal units to receive surface-applied hardware. Drilling and tapping for surface-applied finish hardware may be done at project site. Locate finish hardware drilling for installation as shown on final shop drawings or, if not shown, in accordance with "Recommended Locations for Builder's Hardware", published by the Door and Hardware Institute.

6. DOOR SILENCERS
   A. Drill stops to receive 3 silencers on strike jambs of single swing frames and 2 silencers on heads of double-swing frames. Manufacturer's "stick-on" silencers will not be acceptable in lieu of drilled type.

7. SHOP PAINTING
   A. Clean, treat and paint exposed surfaces of fabricated hollow metal units, including galvanized surfaces. Clean steel surfaces of mill scale, rust, oil, grease, dirt and other foreign materials before the application of shop coat of paint. Grind all welds smooth; fill before priming. Apply shop coat of rust-inhibitive prime paint applied in even consistency to provide a uniformly finished surface ready to receive field-applied paint.
   B. Hardware: Installation to be in strict conformance with manufacturer's specifications and instructions. All hardware to operate smoothly and properly and not bind in opening. Master keys to be delivered to Architect at final inspection.
   C. Guarantee: This contractor will guarantee all labor, equipment and materials for a period of one (1) year from acceptance date. Warranty does not cover vandalism, unauthorized repair attempts or acts of God. Warranties exceeding one (1) year will not be affected by this warranty.
   D. Coordination: All items required to complete this work to be delivered to job site at such time to allow for proper coordination and installation into work. Coordinate with work of other trades. Install members true to line, plumb, level, square and in proper planes with other work, free from sags, waves, buckles or other objectionable defects. Adequately anchor to safety resist all stresses to which the members shall normally be subjected.

ALUMINUM DOORS AND FRAMES:

1. ALUMINUM DOORS
   A. Aluminum entrance doors shall be equal to KAWNEER wide stile 500. Doors shall have full mortise continuous aluminum hinges equal to MARKAR #FM-100, heavy duty closers with A.D.A. pull force. A.D.A. compliant threshold, weather stripping, and A.D.A. compliant pull.

2. ALUMINUM FRAMES
   A. Aluminum frames for doors and windows shall be as shown on the drawings and equal to KAWNEER Trifab 451 using concealed glazing system for 1" thick, dual glazing for exterior frames and 1/4 inch single glazing for interior frames.
   B. Frames shall be fabricated to fit field openings with minimum clearances and shim spacing around perimeter of assembly allowing for dynamic movement of perimeter seal. Caulk perimeter of frames.

3. FINISHES
   A. Finish: Kawneer Permanodic AA-M10C21A44 / AA-M45C22A44, AAMA 611, Architectural Class / Color Anodic Coating (Color "medium" or "dark bronze" finish) or clear finish depending on Owner selection.

4. HARDWARE
   A. Provide door manufacturer's standard heavy-duty hardware units as indicated, scheduled, or required for operation of each door.

5. DOOR FABRICATION
   A. Fabricate doors from aluminum alloy 6063-T5 extruded aluminum.

ALUMINUM DOORS AND FRAMES (CONTINUED):

   B. Required sizes for doors including profile requirements are as indicated on drawings. To greatest extent possible, complete the fabrication, assembly, finishing, hardware application and other work before shipment to project site.
   C. Fabricate doors to facilitate replacement of glass panels without disassembly of door stiles and rails.
   D. For exterior doors, provide compression weatherstripping against fixed stops; at other edges, provide sliding weatherstripping retained in adjustable strip mortised into door edge. Provide EPDM/vinyl blade gasket weatherstripping in bottom door rail, adjustable for contact with threshold.

6. FRAME AND FIXED GLASS WINDOW FABRICATION
   A. Fabricate frames and all other extruded aluminum work from aluminum alloy 6063-T5 extruded aluminum according to sizes indicated on drawings and verified by field measurements.
   B. Required sizes for frames including profile requirements are as indicated on drawings. To greatest extent possible, complete the fabrication, assembly, finishing, hardware application and other work before shipment to project site. Disassemble components only as necessary for shipment and installation.
   C. Perform fabrication operations, including cutting, fitting, forming, drilling and grinding of metal work in manner which prevents damage to exposed finish surfaces. Do not drill and tap for surface-mounted hardware items until time of installation at project site.
   D. Install reinforcing as necessary for performance requirements; separate dissimilar metals with bituminous paint or other separator which will prevent corrosion. Maintain accurate relation of planes and angles, with hairline fit contacting members use concealed fasteners wherever possible.
   E. Provide inside-outside matched resilient flush-glazed system for 1" insulating glass with provisions for glass replacement. Shop-fabricate and preassemble frame components where possible.
   F. Provide snap-on extruded aluminum glazing stops with exterior stops anchored for non-removal.

WOOD DOORS:

1. INTERIOR FLUSH WOOD DOORS
   A. Solid Core Wood Doors to have type I waterproof bond. Core construction to be solid wood block or wood particleboard as required by door manufacturer to comply with specified warranty period. Face panels of manufacturer's standard of 5-ply veneer.
   B. Exposed surfaces of door veneer for interior wood doors as shown on schedule to receive a transparent finish, provide manufacturer's standard thickness face veneers of AWI custom grade face veneers of plain sliced red oak as per schedule. Provide matching hardwood exposed edges and other exposed solid wood components for non-labeled doors to be equal to MARSHFIELD DOOR SYSTEMS, Signature series.
   C. Doors shall be factory prepared to receive door hardware. Preparations shall be in accordance with approved Hardware Schedule following templates and instructions provided by the hardware manufacturer.

2. DOORS
   A. Interior Doors: 1-3/4 inches thick unless otherwise indicated; flush construction.
   B. Provide solid core doors at all locations.
   C. Fire Rated Doors: Tested to ratings indicated on drawings in accordance with International Building Code ("positive pressure"); UL or WH (ITS) labeled without any visible seals when door is open.

3. DOOR AND PANEL CORES
   A. Non-Rated Solid Core and 20 Minute Rated Doors: Type particleboard core (PC), plies and faces as indicated above.
   B. Fire Rated Doors: Mineral core, Type FD, plies and faces as indicated above; with core blocking as required to provide adequate anchorage of hardware without through-bolting.

4. DOOR FACING
   A. Wood Veneer Facing for Stained Transparent Finish: Red oak, veneer grade as specified by quality standard, plain sliced, book veneer match, running assembly match; unless otherwise indicated.
   B. Vertical Edges shall be the same species as the face veneer.

5. DOOR CONSTRUCTION
   A. Fabricate doors in accordance with door quality standard specified.
   B. Cores Constructed with Stiles and Rails.
   C. Factory machine doors for hardware other than surface-mounted hardware, in accordance with hardware requirements and dimensions.
   D. Provide edge clearances in accordance with AWI Quality Standards Illustrated Section 1700.

OVERHEAD COILING DOORS:

1. MANUFACTURER
   A. Overhead Coiling Door: Equal to Overhead Door Corporation; Thermacore Series; Model 625: ww.overheaddoor.com.

2. COILING OVERHEAD DOORS
   A. Exterior Overhead Coiling Doors: Steel slat curtain
      i. Capable of withstanding positive and negative wind loads of 20 psf, without undue deflection or damage to components.
      ii. Sandwich slat construction with insulated core of polyurethane.
      iii. Weatherseals: Vinyl bottom seal, exterior guide and internal hood seals at perimeter of opening.
      iv. Finish: Factory finish powder-coat, both sides interior and exterior, color selected by Owner.
      v. Guides: Angles; galvanized steel.
      vi. Hood Enclosure: Manufacturer's standard; primed steel and painted both sides interior and exterior to match door color.
      vii. Electric Motor Operation: Provide UL listed electric operator, 110V, 1/2 hp by manufacturer to move door in either direction at not less than 2/3 foot nor more than 1 foot per second.
         a. Sensing Edge Protection: Electric. Safety edge take up real.
         b. Operator Controls: Push-button operated control stations with open, close, and stop buttons for surface mounting interior side only.
      viii. Mounting: Within framed opening (between jambs).

DOOR HARDWARE:

1. SCHEDULED DOOR HARDWARE
   A. General: Provide door hardware for each door to comply with requirements in Door Hardware Sets and each referenced section that products are to be supplied under.
   B. Designations: Requirements for quantity, item, size, finish or color, grade, function, and other distinctive qualities of each type of door hardware are indicated in the Door Hardware Sets at the end of Part 3. Products are identified by using door hardware designations, as follows:
      1. Named Manufacturer's Products: Product designation and manufacturer are listed for each door hardware type required for the purpose of establishing requirements. Manufacturers' names are abbreviated in the Door Hardware Schedule.

2. HANGING DEVICES
   A. Hinges: ANSI/BHMA A156.1 certified butt hinges with number of hinge knuckles and other options as specified in the Door Hardware Sets.
      1. Quantity: Provide the following hinge quantity:
         a. Two Hinges: For doors with heights up to 60 inches.
         b. Three Hinges: For doors with heights 61 to 90 inches.
         c. Four Hinges: For doors with heights 91 to 120 inches.
         d. For doors with heights more than 120 inches, provide 4 hinges, plus 1 hinge for every 30 inches of door height greater than 120 inches.
      2. Hinge Size: Provide the following, unless otherwise indicated, with hinge widths sized for door thickness and clearances required:
         a. Widths up to 3'0": 4-1/2" standard or heavy weight as specified.
         b. Sizes from 3'1" to 4'0": 5" standard or heavy weight as specified.
      3. Hinge Weight and Base Material: Unless otherwise indicated, provide the following:
         a. Exterior Doors: Heavy weight, non-ferrous, ball bearing or oil impregnated bearing hinges unless Hardware Sets indicate standard weight.
         b. Interior Doors: Standard weight, steel, ball bearing or oil impregnated bearing hinges unless Hardware Sets indicate heavy weight.
      4. Hinge Options: Comply with the following:
         a. Non-removable Pins: Provide set screw in hinge barrel that, when tightened into a groove in hinge pin, prevents removal of pin while door is closed; for the all out-swinging lockable doors.
      5. Manufacturers:
         a. Bommer Industries (BO).
         b. Hager Companies (HA).
         c. McKinney Products; ASSA ABLOY Architectural Door Accessories (MK).

(ARCHITECTURAL SPECIFICATIONS CONTINUE ON SHEET A103)

WALL ENGINEERING
PO BOX 1457, DURANT, OK 74702
OKLAHOMA CA #5413 EXP. JUNE 30, 2023

SUBMITTAL / REVISIONS:

DATE	BY	SUBMITTAL / REVISION

CITY OF SHAWNEE
WASTEWATER TREATMENT PLANT IMPROVEMENTS
SHAWNEE, OKLAHOMA

SPECIFICATIONS

PROJECT NO.
#SH-20-21

DATE
March 11, 2022

DRAWN BY:

CHECKED BY:

REVIEWED BY:

SCALE:

BAR IS ONE HALF INCH ON ORIGINAL DRAWING
0" 1/2"
IF NOT ONE HALF INCH ON THIS SHEET, ADJUST SCALES ACCORDINGLY

SHEET

A102

STATE OF OKLAHOMA
4970
3/11/22
REGISTERED
LICENSED ARCHITECT

REDLAND CHILDERS ARCHITECTS
413 W. 12th
Ada, OK 74820
p. 580-436-0770
f. 580-436-6320
www.rcada.com

(ARCHITECTURAL SPECIFICATIONS CONTINUED)

DOOR HARDWARE (CONTINUED):

B. Continuous Geared Hinges: ANSI/BHMA A156.26 Grade 1-600 certified continuous geared hinge. with minimum 0.120-inch thick extruded 6060 T6 aluminum alloy hinge leaves and a minimum overall width of 4 inches. Hinges are non-handed, reversible and fabricated to template screw locations. Factory trim hinges to suit door height and prepare for electrical cut-outs.
   1. Manufacturers:
      a. Bommer Industries (BO).
      b. Hager Companies (HA).
      c. Pemko Products; ASSA ABLOY Architectural Door Accessories (PE).

3. DOOR OPERATING TRIM
   A. Flush Bolts and Surface Bolts: ANSI/BHMA A156.3 and A156.16, Grade 1, certified.
      1. Flush bolts to be furnished with top rod of sufficient length to allow bolt retraction device location approximately six feet from the floor.
      2. Furnish dust proof strikes for bottom bolts.
      3. Surface bolts to be minimum 8" in length and U.L. listed for labeled fire doors and U.L. listed for windstorm components where applicable.
      4. Provide related accessories (mounting brackets, strikes, coordinators, etc.) as required for appropriate installation and operation.
      5. Manufacturers:
         a. Rockwood Products; ASSA ABLOY Architectural Door Accessories (RO).
   B. Door Push Plates and Pulls: ANSI/BHMA A156.6 certified door pushes and pulls of type and design specified in the Hardware Sets. Coordinate and provide proper width and height as required where conflicting hardware dictates.
      1. Push/Pull Plates: Minimum .050 inch thick, size as indicated in hardware sets, with beveled edges, secured with exposed screws unless otherwise indicated.
      2. Offset Pull Design: Size, shape, and material as indicated in the hardware sets. Minimum clearance of 2 1/2-inches from face of door and offset of 90 degrees unless otherwise indicated.
      3. Fasteners: Provide manufacturer's designated fastener type as indicated in Hardware Sets.
      4. Manufacturers:
         a. Rockwood Products; ASSA ABLOY Architectural Door Accessories (RO).

4. CYLINDERS AND KEYING
   A. General: Cylinder manufacturer to have minimum (10) years experience designing secured master key systems and have on record a published security keying system policy.
   B. Source Limitations: Obtain each type of keyed cylinder and keys from the same source manufacturer as locksets and exit devices, unless otherwise indicated.
      1. Manufacturers:
         a. Corbin Russwin Hardware (RU).
         b. Sargent Manufacturing (SA).
   C. Cylinder Types: Original manufacturer cylinders able to supply the following cylinder formats and types:
      1. Threaded mortise cylinders with rings and cams to suit hardware application.
      2. Rim cylinders with back plate, flat-type vertical or horizontal tailpiece, and raised trim ring.
      3. Bored or cylindrical lock cylinders with tailpieces as required to suit locks.
      4. Tubular deadlocks and other auxiliary locks.
      5. Mortise and rim cylinder collars to be solid and recessed to allow the cylinder face to be flush and be free spinning with matching finishes.
      6. Keyway: Manufacturer's Standard.
   D. Keying System: Each type of lock and cylinders to be factory keyed.
      1. Supplier shall conduct a "Keying Conference" to define and document keying system instructions and requirements.
      2. Furnish factory cut, nickel-silver large bow permanently inscribed with a visual key control number as directed by Owner.
      3. New System: Key locks to a new key system as directed by the Owner.
   E. Key Quantity: Provide the following minimum number of keys:
      1. Change Keys per Cylinder: Two (2)
      2. Master Keys (per Master Key Level/Group): Five (5).
   F. Key Registration List (Bitting List):
      1. Provide keying transcript list to Owner's representative in the proper format for importing into key control software.
      2. Provide transcript list in writing or electronic file as directed by the Owner.

5. KEY CONTROL
   A. Key Control Cabinet: Provide a key control system including envelopes, labels, and tags with self-locking key clips, receipt forms, 3-way visible card index, temporary markers, permanent markers, and standard metal cabinet. Key control cabinet shall have expansion capacity of 150% of the number of locks required for the project.
      1. Manufacturers:
         a. Lund Equipment (LU).
         b. Telkee (TK).

6. MECHANICAL LOCKS AND LATCHING DEVICES
   A. Cylindrical Locksets, Grade 2 (Standard Duty): ANSI/BHMA A156.2, Series 4000, Grade 2 Certified Products Directory (CPD) listed.
      1. Locks are to be non-handed and fully field reversible.
      2. Manufacturers:
         a. Corbin Russwin Hardware (RU) - CL3800 Series.
         b. Dormakaba Best (BE) - 7KC Series.
         c. Sargent Manufacturing (SA) - 7 Line.

7. AUXILIARY LOCKS
   A. Cylindrical Deadlocks: ANSI/BHMA A156.36 Grade 1 Certified Products Directory (CPD) listed deadlocks to fit standard ANSI 161 preparation and 1 3/8" to 1 3/4" thickness doors. Provide tapered collars to resist vandalism and 1" throw solid steel bolt with hardened steel roller pins. Deadlocks to be products of the same source manufacturer and keyway as other locksets.
      1. Manufacturers:
         a. Corbin Russwin Hardware (RU) - DL3000 Series.
         b. Sargent Manufacturing (SA) - 480 Series.

8. LOCK AND LATCH STRIKES
   A. Strikes: Provide manufacturer's standard strike with strike box for each latch or lock bolt, with curved lip extended to protect frame, finished to match door hardware set, unless otherwise indicated, and as follows:
      1. Flat-Lip Strikes: For locks with three-piece antifriction latchbolts, as recommended by manufacturer.
      2. Extra-Long-Lip Strikes: For locks used on frames with applied wood casing trim.
      3. Aluminum-Frame Strike Box: Provide manufacturer's special strike box fabricated for aluminum framing.
      4. Double-lipped strikes: For locks at double acting doors. Furnish with retractable stop for rescue hardware applications.
   B. Standards: Comply with the following:
      1. Strikes for Mortise Locks and Latches: BHMA A156.13.
      2. Strikes for Bored Locks and Latches: BHMA A156.2.
      3. Strikes for Auxiliary Deadlocks: BHMA A156.36.
      4. Dustproof Strikes: BHMA A156.16.

9. CONVENTIONAL EXIT DEVICES
   A. General Requirements: All exit devices specified herein shall meet or exceed the following criteria:
      1. At doors not requiring a fire rating, provide devices complying with NFPA 101 and listed and labeled for "Panic Hardware" according to UL305. Provide proper fasteners as required by manufacturer including sex nuts and bolts at openings specified in the Hardware Sets.
      2. Where exit devices are required on fire rated doors, provide devices complying with NFPA 80 and with UL labeling indicating "Fire Exit Hardware". Provide devices with the proper fasteners for installation as tested and listed by UL Consult manufacturer's catalog and template book for specific requirements.
      3. Except on fire rated doors, provide exit devices with hex key dogging device to hold the pushbar and latch in a retracted position. Provide optional keyed cylinder dogging on devices where specified in Hardware Sets.
      4. Devices must fit flat against the door face with no gap that permits unauthorized dogging of the push bar. The addition of filler strips is required in any case where the door light extends behind the device as in a full glass configuration.
      5. Lever Operating Trim: Where exit devices require lever trim, furnish manufacturer's heavy duty escutcheon trim with threaded studs for thru-bolts.
         a. Lock Trim Design: As indicated in Hardware Sets, provide finishes and designs to match that of the specified locksets.
         b. Where function of exit device requires a cylinder, provide a cylinder (Rim or Mortise) as specified in Hardware Sets.
      6. Vertical Rod Exit Devices: Where surface or concealed vertical rod exit devices are used at interior openings, provide as less bottom rod (LBR) unless otherwise indicated. Provide dust proof strikes where thermal pins are required to project into the floor.

DOOR HARDWARE (CONTINUED):

   7. Narrow Stile Applications: At doors constructed with narrow stiles, or as specified in Hardware Sets, provide devices designed for maximum 2" wide stiles.
   8. Dummy Push Bar: Nonfunctioning push bar matching functional push bar.
   9. Rail Sizing: Provide exit device rails factory sized for proper door width application.
   10. Through Bolt Installation: For exit devices and trim as indicated in Door Hardware Sets.
   B. Conventional Push Rail Exit Devices (Heavy Duty): ANSI/BHMA A156.3, Grade 1 Certified Products Directory (CPD) listed panic and fire exit hardware devices furnished in the functions specified in the Hardware Sets. Exit device latch to be stainless steel, pullman type, with deadlock feature.

10. DOOR CLOSERS
   A. All door closers specified herein shall meet or exceed the following criteria:
      1. General: Door closers to be from one manufacturer, matching in design and style, with the same type door preparations and templates regardless of application or spring size. Closers to be non-handed with full sized covers.
      2. Standards: Closers to comply with UL-10C for Positive Pressure Fire Test and be U.L. listed for use of fire rated doors.
      3. Size of Units: Comply with manufacturer's written recommendations for sizing of door closers depending on size of door, exposure to weather, and anticipated frequency of use. Where closers are indicated for doors required to be accessible to the Americans with Disabilities Act, provide units complying with ANSI ICC/A117.1.
      4. Closer Arms: Provide heavy duty, forged steel closer arms unless otherwise indicated in Hardware Sets.
      5. Closers shall not be installed on exterior or corridor side of doors; where possible install closers on door for optimum aesthetics.
      6. Closer Accessories: Provide door closer accessories including custom templates, special mounting brackets, spacers and drop plates as required for proper installation. Provide through-bolt and security type fasteners as specified in the hardware sets.
   B. Door Closers, Surface Mounted (Large Body Cast Iron): ANSI/BHMA A156.4, Grade 1 Certified Products Directory (CPD) listed surface mounted, heavy duty door closers with complete spring power adjustment, sizes 1 thru 6; and fully operational adjustable according to door size, frequency of use, and opening force. Closers to be rack and pinion type, one piece cast iron body construction, with adjustable backcheck and separate non-critical valves for closing sweep and latch speed control.
      1. Manufacturers:
         a. Corbin Russwin Hardware (RU) - DC8000 Series.
         b. Norton Door Controls (NO) - 9500 Series.
         c. Sargent Manufacturing (SA) - 281 Series.
   C. Door Closers, Surface Mounted (Unitrol): ANSI/BHMA A156.4, Grade 1 Certified Products Directory (CPD) listed surface mounted closers with door stop mechanism to absorb dead stop shock on arm and top hinge. Hold-open arms to have a spring loaded mechanism in addition to shock absorber assembly. Arms to be provided with rigid steel main arm and secondary arm lengths proportional to the door width.
      1. Manufacturers:
         a. Corbin Russwin Hardware (RU) - Unitrol Series.
         b. Norton Door Controls (NO) - Unitrol Series.

11. ARCHITECTURAL TRIM
   A. Door Protective Trim
      1. General: Door protective trim units to be of type and design as specified below or in the Hardware Sets.
      2. Size: Fabricate protection plates (kick, armor, or mop) not more than 2" less than door width (LDW) on stop side of single doors and 1" LDW on stop side of pairs of doors, and not more than 1" less than door width on pull side. Coordinate and provide proper width and height as required where conflicting hardware dictates. Height to be as specified in the Hardware Sets.
      3. Where plates are applied to fire rated doors with the top of the plate more than 16" above the bottom of the door, provide plates complying with NFPA 80. Consult manufacturer's catalog and template book for specific requirements for size and applications.
      4. Protection Plates: ANSI/BHMA A156.6 certified protection plates (kick, armor, or mop), fabricated from the following:
         a. Stainless Steel: 300 grade, 050-inch thick.
      5. Options and fasteners: Provide manufacturer's designated fastener type as specified in the Hardware Sets. Provide countersunk screw holes.
      6. Manufacturers:
         a. Rockwood Products; ASSA ABLOY Architectural Door Accessories (RO).

12. DOOR STOPS AND HOLDERS
   A. General: Door stops and holders to be of type and design as specified below or in the Hardware Sets.
   B. Door Stops and Bumpers: ANSI/BHMA A156.16, Grade 1 certified door stops and wall bumpers. Provide wall bumpers, either convex or concave types with anchorage as indicated, unless floor or other types of door stops are specified in Hardware Sets. Do not mount floor stops where they will impede traffic. Where floor or wall bumpers are not appropriate, provide overhead type stops and holders.
      1. Manufacturers:
         a. Rockwood Products; ASSA ABLOY Architectural Door Accessories (RO).

13. ARCHITECTURAL SEALS
   A. General: Thresholds, weatherstripping, and gasket seals to be of type and design as specified below or in the Hardware Sets. Provide continuous weatherstrip gasketing on exterior doors and provide smoke, light, or sound gasketing on interior doors where indicated. At exterior applications provide non-corrosive fasteners and elsewhere where indicated.
   B. Smoke Labeled Gasketing: Assemblies complying with NFPA 105 that are listed and labeled by a testing and inspecting agency acceptable to authorities having jurisdiction, for smoke control ratings indicated, based on testing according to UL 1784.
      1. Provide smoke labeled perimeter gasketing at all smoke labeled openings.
   C. Fire Labeled Gasketing: Assemblies complying with NFPA 80 that are listed and labeled by a testing and inspecting agency acceptable to authorities having jurisdiction, for fire ratings indicated, based on testing according to UL-10C.
      1. Provide intumescent seals as indicated to meet UL10C Standard for Positive Pressure Fire Tests of Door Assemblies, and NPFA 252, Standard Methods of Fire Tests of Door Assemblies.
   D. Sound-Rated Gasketing: Assemblies that are listed and labeled by a testing and inspecting agency, for sound ratings indicated.
   E. Replaceable Seal Strips: Provide only those units where resilient or flexible seal strips are easily replaceable and readily available from stocks maintained by manufacturer.
   F. Manufacturers:
      1. Pemko Products; ASSA ABLOY Architectural Door Accessories (PE).

14. FABRICATION
   A. Fasteners: Provide door hardware manufactured to comply with published templates generally prepared for machine, wood, and sheet metal screws. Provide screws according to manufacturers recognized installation standards for application intended.

15. FINISHES
   A. Standard: Designations used in the Hardware Sets and elsewhere indicate hardware finishes complying with ANSI/BHMA A156.18, including coordination with traditional U.S. finishes indicated by certain manufacturers for their products.
   B. Provide quality of finish, including thickness of plating or coating (if any), composition, hardness, and other qualities complying with manufacturer's standards, but in no case less than specified by referenced standards for the applicable units of hardware.
   C. Protect mechanical finishes on exposed surfaces from damage by applying a strippable, temporary protective covering before shipping.

16. HARDWARE SETS
   A. Submit hardware sets based on industry standards for this type of project. Note any fire rated assemblies. 90-minute fire rated hardware is required for doors shown on the Drawings.

GLASS AND GLAZING:

1. GLAZING TYPES
   A. Exterior Doors, Side Lites and Windows: Install 1/4" tinted to match Low-E tempered glazing.
   B. Secure Entrance Doors and Windows: Install 1/4" tempered and laminated (PVB) glass.
   C. Interior Side Lites and Windows (non-rated): Install 1/4" clear tempered glazing at non-rated assemblies.
   D. Interior Side Lites (rated): Install 1/4" clear fire rated tempered glazing at assemblies.
   E. Areas not requiring safety glass or rated glass by law shall be 1/4" clear float glass. Install safety glass and rated glass where required by law or identified on Drawings.

2. PRIME (NONPROCESSED) GLASS
   A. Float/Plate Glass: Type 1, Quality q3, 1/4" thick in standard clear float glass.

3. PROCESSED GLASS
   A. Tempered Glass: Provide prime glass of color and type indicated which has been heat treated to strengthen glass in bending to not less than 4.5 times annealed strength.
   B. Laminated glass (tempered) to be fabricated with heat and pressure, free of foreign substances and air pockets.

GLASS AND GLAZING (CONTINUED):

4. COLOR/TINT
   A. All exterior glaing shall have a "gray" tint in manufacturer's standard color; 56% to 59% light transmittance and 56% solar energy transmittance for exterior glazing; outboard pane insulated glass to have color tint; inboard pane of insulated fixed glass shall be clear.
   B. All interior glazing shall be clear.
   C. Single thickness interior fixed glass shall be clear.
   D. Single thickness exterior fixed glass for doors hall be tinted to match insulated glass.

5. INSULATING GLASS
   A. Furnish insulating units for all exterior installations except doors which shall be 1/4" tempered glass.
   B. Twin primary seals of polyisobutylene; tubular aluminum or galvanized steel spacer-bar frame with welded or soldered sealed corners and filled with dessicant; secondary seal outside of bar, bonded to both sheets of glass and bar, of polysulfide, silicone or hot-melt butyl elastomeric sealant (fabricator's option).
   C. Glazing: All exterior openings shall be glazed with 1" insulated glass. Insulated units shall be 1/4" bronze tinted glass on exterior face and 1/4" low E glass on interior face. Low E coating shall be on the 3rd surface and shall be equal to AFG "Comfort E2".
   D. 10 year warranty on factory sealed units.

6. GLAZING SEALANTS AND COMPOUNDS
   A. General: Provide color of exposed sealant/compound indicated, or if not otherwise indicated, as selected by Architect from manufacturer's standard colors. Comply with manufacturer's recommendations for selection of hardness, depending upon the location of each application, conditions at time of installation and performance requirements as indicated. Select materials and variations or modifications, carefully for compatibility with surfaces contacted in the installation. B, 1-Part Silicone Rubber Glazing Sealant: Elastomeric silicone sealant complying with FS TT-S-001543, Class A, non-sag. Provide acid type recommended by manufactures where only nonporous bond surfaces are contacted; provide nonacid type recommended by manufacturer where one or more porous bond surfaces are contacted.

7. MISCELLANEOUS GLAZING MATERIALS
   A. Cleaners, Primers and Sealers: Type recommended by sealant manufacturer.
   B. Setting Blocks: Neoprene, 70-90 durometer hardness, with proven compatibility with sealants used.
   C. Spacers: Neoprene, 40-50 durometer hardness, with proven compatibility with sealants used.
   D. Compressible Filler Rod: Closed-cell or waterproof-jacketed rod stock of synthetic rubber or plastic foam, compatible with sealants used, flexible and resilient.

GYPSUM BOARD ASSEMBLIES:

1. MATERIALS
   A. United States Gypsum Products:
      1. Drywall Panels on interior metal studs - 5/8" thick gypsum wall board with tapered edges. Moisture resistant (green board) in 5/8" thickness shall be used adjacent to all "wet" area locations and/or as substrate for ceramic tile when applied to drywall.
      2. Drywall Panels on interior of ICF Forms - 5/8" thick fire code (type x) gypsum wall board with tapered edges.
      3. Fasteners - Screw Type S, GWB-54 or W.
      4. Metal Trim - No. J200-A "J" Metal Trim;L200-B "L" Metal Trim; U200-A "U" Metal Trim.
      5. Control Joint - No. 093 rolled form zinc.
      6. Joint System - "Perf-a-Tape" Joint Reinforcing Tape with Ready-Mix Joint Compounds.
      7. Metal Studs and Runners for Non-Load Bearing Partitions - Galvanized steel 2 1/2" and 3 5/8" x 22 gauge (heavy duty .0269) standard studs and runners.
      8. Acoustical insulation shall be 3.5 inches thick, friction fit sound insulation batts or rock-wool batts having a A95TC rating.
      9. Metal framing for exterior soffit and fascias - Shall be as specified in Section 05400 of these Specifications or as shown on the drawings. Refer to drawings for stud sizes.

HARD TILE:

1. HARD TILE
   A. ROOM FINISH LEGEND and ROOM FINISH SCHEDULE located on drawings.
2. GROUT MATERIALS
   A. As recommended by tile manufacturer. Submit available color selections.
   B. Minimal grout joints in tile.
   C. Grout: All grout shall conform with applicable ANSI standards and be installed equivalent to description indicated herein:
      1. Ambient temperature to be minimum of 50° and rising before setting or grouting tile with Portland cement. Comply with minimum temperature recommendations of the manufacturer for bonding and grouting materials other than portland cement mortar.
      2. Wall Tile Grout - Use latex materials as LATICRETE #600 series or approved equal; sanded in color as directed.
      3. Substrate Movement: Cover any substrate cracks prior to installing thin-set adhesive material using a DAL-SEAL CIS composite sheet to bridge any concrete separation that is to be covered by floor tile. Minimum sheet width to be 12". Fill or grind substrate as required to obtain a level surface for attaching with manufacturer's recommended adhesive.
      4. Colors: Manufacturer's colors selected from price group 2. Two (2) colors will be used for pattern shown; see wall layout on drawing for details. Provide to Architect a color pallet of sample tiles available in price range specified to be used for color selection.
      5. Sealant over grout: Install sealant that is approved by grout manufacturer over all hard tile grout.

3. EDGE PROTECTION
   A. Schluter Systems, Plattsburgh, NY (1-800-472-4588)
   B. Edge protection for outside vertical corners, edges of tile where bullnose tile is not installed, and transitions in the tile to tile or tile to foreign material where the edge of the tile is exposed.
   C. Finish shall be satin anodized aluminum.

SUSPENDED ACOUSTICAL CEILINGS:

1. ACOUSTICAL UNITS
   A. Manufacturers: Equal to Armstrong World Industries, Inc: www.armstrong.com.
      1. ROOM FINISH LEGEND and ROOM FINISH SCHEDULE located on drawings for ceiling type locations.
   B. Type "A" Acoustical Tiles: Install where shown on drawings.
      1. Cortega #704 white, 24 inch by 24 inch by 5/8 inch with 15/16 inch angled tegular edge.
   C. Type "B" Vinyl Faced Gypsum Board Tiles: Install where shown on drawings.
      1. 24" x 24" x 1/2" thick vinyl face gypsum board lay-in ceiling tiles equal to "Climaplus" manufactured by U.S. GYPSUM.
   E. Fixed Drywall: Install where shown on drawings; 5/8" gypsum board to metal framing system.

2. SUSPENSION SYSTEM(S)
   A. Manufacturers:
      1. Equal to Armstrong World Industries, Inc: www.armstrong.com.
   B. Suspension System shall be compatible with 24 inch by 24 inch grid system in all areas and configuration as indicated on Drawings. System shall consist of 1-1/2 inch by 15/16 inch by .020 main tee; 1-1/2 inch by .020 positive lock cross tee; and .024 inch angle mould. Grid color shall match tile color: White.
   C. Suspension Systems - General: ASTM C 635; die cut and interlocking components, with stabilizer bars, clips, splices, perimeter moldings, and hold down clips as required.
   D. Drywall Suspension System: Short span t-bars shall be double web construction with screw stop reverse hem and knarled surface, 1 1/2" web height and 1 1/2" flange.

LUXURY VINYL TILE:

1. RESILIENT TILE FLOORING MATERIALS
   A. Provide Luxury Vinyl Tile as indicated on Room Finish Schedule and Legend located on the drawings.
      1. Description: A layered construction consisting of a tough, clear, rigid vinyl wear layer protecting a high-fidelity print layer on a solid vinyl backing. Protected by a diamond-infused UV-cured polyurethane finish, the wear surface is embossed with different textures to enhance each of the printed visuals. Colors are insoluble in water and resistant to cleaning agents and light.
      2. Reference specification - ASTM F 1700, "Standard Specification for Solid Vinyl Tile", Class III, Type B - Embossed Surface. Meets requirements for size, squareness, thickness, thickness of wear layer, residual indentation, resistance to chemicals, resistance to light and resistance to heat.
      3. Pattern and Color: See Material Finish Legend, located on drawings.
2. WALL BASE MATERIALS
   A. For top set wall base: Provide 1/8 in. (3.2 mm) thick, 4 in. (10.16 cm) Armstrong Flooring Color-Integrated Wall Base with a matte finish, conforming to ASTM F 1861, Type TP - Rubber, Thermoplastic, Group 1 - Solid, Style B - Cove.
3. ADHESIVES
   A. Provide Armstrong S-288 Flooring Adhesive under the flooring and Armstrong S-725 Wall Base Adhesive at the wall base as recommended by the flooring manufacturer.

(ARCHITECTURAL SPECIFICATIONS CONTINUE ON SHEET A104)

WALL ENGINEERING
PO BOX 1457, DURANT, OK 74702
OKLAHOMA CA #6413 EXP. JUNE 30, 2023

SUBMITTAL / REVISIONS:
DATE | BY | SUBMITTAL / REVISION

CITY OF SHAWNEE
WASTEWATER TREATMENT PLANT IMPROVEMENTS
SHAWNEE, OKLAHOMA

SPECIFICATIONS

PROJECT NO.
#SH-20-21
DATE
March 11, 2022
DRAWN BY:
CHECKED BY:
REVIEWED BY:
SCALE:

BAR IS ONE HALF INCH ON ORIGINAL DRAWING
0" 1/2"
IF NOT ONE HALF INCH ON THIS SHEET, ADJUST SCALES ACCORDINGLY

SHEET
A103

STATE OF OKLAHOMA
KYLE E. MILLER
4970
3/11/22
LICENSED ARCHITECT

REDLAND CHILDERS ARCHITECTS
413 W. 12th
Ada, OK 74820
p. 580-436-0770
f. 580-436-6320
www.rcada.com

(ARCHITECTURAL SPECIFICATIONS CONTINUED)

LUXURY VINYL TILE (CONTINUED):

4. ACCESSORIES
   A. Provide transition/reducing strips tapered to meet abutting materials.
   B. Provide threshold of thickness and width as shown on the drawings.
   C. Provide resilient edge strips of width shown on the drawings, of equal gauge to the flooring, homogeneous vinyl or rubber composition, tapered or bullnose edge, with color to match or contrast with the flooring, or as selected by the Architect from standard colors available.
   D. Provide metal edge strips of width shown on the drawings and of required thickness to protect exposed edges of the flooring. Provide units of maximum available length to minimize the number of joints. Use butt-type metal edge strips for concealed anchorage, or overlap-type metal edge strips for exposed anchorage. Unless otherwise shown, provide strips made of extruded aluminum with a mill finish.

CARPET TILE:

1. CARPET TILE
   A. See ROOM FINISH LEGEND and ROOM FINISH SCHEDULE located on drawings.
   B. All carpet is to be installed using direct glue-down method in strict conformance with recommendations and warranties by carpet manufacturer.
   C. Install vinyl edge strips and transition strips where carpet joins a different flooring material or unless indicated otherwise.
   D. At doorways, center seams under door in closed position.

2. ACCESSORIES
   A. Metal edge/transition strips: Extruded aluminum as manufactured by SCHLUTER SYSTEMS with finish as directed by Architect. Provide height required to protect carpet and of maximum lengths to minimize running joints.
   B. Adhesive (general): Water resistant, mildew-resistant, non-staining, pressure sensitive type to suit products and subfloor conditions, that complies with flammability requirements for installed carpet and is recommended by the carpet manufacturer.
   C. Adhesive (area rugs): LokDots adhesive rolls by SHAW CONTRACT GROUP. Install as recommended by manufacturer.

PAINTS & COATINGS:

1. MANUFACTURERS
   A. Provide all paint and coating products from the same manufacturer to the greatest extent possible.
   B. Paints: Acceptable manufacturers are limited to the following:
      i. Glidden: www.glidden.com
      ii. Pittsburgh: www.pittsburghpaints.com
      iii. Pratt & Lambert: www.prattandlambert.com
      iv. Sherwin-Williams: www.sherwin-williams.com
      v. Benjamin Moore & Co: www.benjaminmoore.com.

2. MATERIALS - GENERAL
   A. Paints and Coatings: Provide products listed in Master Painters Institute Approved Product List, current edition available at www.paintinfo.com, for specified MPI Categories, except as otherwise indicated.
      i. Provide ready mixed paints and coatings, except field-catalyzed coatings.
      ii. Provide materials that are compatible with one another and the substrates indicated under conditions of service and application, as demonstrated by manufacturer based on testing and field experience.

3. PAINT SYSTEMS
   A. Provide Premium Grade systems (2 top coats) as defined in MPI Architectural Painting Specification Manual, except as otherwise indicated.

4. PAINT SYSTEMS
   A. General: Provide Premium Grade systems (2 top coats) as defined in MPI Architectural Painting Specification Manual, except as otherwise indicated.
   B. The following Specification for finishes is not intended to mention every particular item which will receive painters finish, but is intended to establish type and quality of finish which will be required on various materials.
   C. Exterior Work:
      i. Ferrous Metals - Steel, hollow metal doors and frames (additional primer coat required if factory primed; touch-up as required).
         a. Primer - One coat “Kem Bond HS” Red or White primers, 3.6 mils dft/coat.
         b. Finish - Two coats “DTM Industrial” exterior-interior semi-gloss enamel, 6.0 mils dft/coat.
         c. NOTE: Spot prime any abraded areas.
      ii. Galvanized Metals - Flashing, fascia, vents.
         a. Primer - One coat “Galvite HS” galvanized steel primer, white; 4 mils dft coat (as required).
         b. Finish - Two coats “Industrial Enamel HS”; exterior-interior gloss enamel; 3.6 mils dft/coat.
         c. NOTE: Surface must be free from grease, dirt, rust, and all other surface contaminants. All rust spots must be properly cleaned and primed.
   D. Interior Work:
      i. Exposed Metal - Hollow metal frames and doors, handrails, and other items of exposed metal, unless factory finished.
         a. Primer - One coat “Kem Kromik” universal inhibitive metal primer; 3.6 mils dft/coat as required.
         b. Finish - Two coats “ProMar 200” interior alkyd egg-shell enamel (B33), 3.5 mils dft/coat.
         c. NOTE: Spot prime any abraded areas. Expanded metal Catwalk and Fly Loft flooring will not receive final painting; only full shop primer coverage.

IDENTIFICATION DEVICES:

1. SIGNAGE APPLICATIONS
   A. Accessibility Compliance: All signs are required to comply with ADAAG and ANSI/ICC A 117.1 and applicable building codes, unless otherwise indicated; in the event of conflicting requirements, comply with the most comprehensive and specific requirements.
2. SIGN TYPES
   A. Room Signs: Install modular curved interior wall-mounted sign frames equal to VISTA SYSTEMS, series VLetter #WFP84 for Classrooms, and Safe Room. Signage shall allow inserts of 8-1/2 inch by 11 inch paper. Paper inserts shall be furnished by Owner. Install where indicated on Signage Plan.
   B. Restroom Signs: Install modular curved interior wall/door mounted signs equal to VISTA SYSTEMS series V150 #WFP33 with raised A.D.A. compliant Braille lettering and symbol for all Restrooms. Install signs in full compliance with A.D.A. and ICC/ANSI 117.1 requirements. Insert color shall be selected by the Owner's representative during the submittal stage. Install where indicated on Signage Plan.
   C. Plaque: Furnish and install 24” x 16” cast aluminum plaque containing Name of Project, Owner Names, Engineer/Architect, Contractor, and Date. Architect will supply plaque layout and arrangement upon receipt of submittal. Plaque to have Helvetica upper and lower case letters, a matte background in color selected by Architect and have No. 512 border design. Final location to be determined by Architect at time of installation. Height of plaque center to be at 5'-0” above finished floor. Mounting of plaque to be flush-to-wall with threaded studs. Wet with Pro-Rock cement. A sign elevation will be provided by the Architect. Install where shown on the Partial Floor Plan. (1 required)
   D. Exterior Building Signage (front): Install painted face and edge cast metal letters as manufactured by A.R.K. RAMOS ARCHITECTURAL SIGNAGE SYSTEMS or approved equal. Letters shall be 12-inch height by 1-inch depth. Submit painted color chip samples for Owner selection. Provide all necessary accessories to install individual letters over cultured stone for Building Sign using “FM-4” mounting system. Use Helvetica font. See Building Elevation drawings for additional information.
   E. Exterior Metal Door Signs: Install injection moulded sign with tactile characters on the Kitchen Deliver and exterior Mechanical metal doors, one each. Raised border shall be 3/8” wide with raised corners. All letters shall contrast with their background. Characters and background shall have a matte finish. Lettering style shall be standard medium, upper case or other sans or simple type face.

METAL LOCKERS:

1. LOCKERS
   A. Single Tier Ventilated Metal Lockers:
      1. Location - In Locker Rooms.
      2. Type - Heavy duty metal Competitor Collection.
      3. Sizes - 12” w x 12” d x 60” h. (42 required - 21 per room)
      4. Construction - Frames and body - 16 gauge body with 18 gauge backs
      5. Ventilation - Front and sides - diamond perforated.
      6. Doors - 14 gauge door with 16 gauge reinforcement channel.
      7. Hinges - 16 gauge continuous piano style.
      8. Finish - epoxy/polyester power coat in color to be selected by Architect from manufacturer's standard colors.
      9. Locker shall have standard lockable handles.
      10. Lockers shall be furnished with number plates consecutively numbered with numbering as provided by Architect.
      11. Provide and install finished ends, filler, trim strips as shown or as required for a completed installation.

PRE-ENGINEERED METAL BUILDING SYSTEM:

1. WARRANTY: Provide twenty (20) year manufacturer warranty for roof sheet finishes. Include coverage for exterior pre-finished surfaces to cover pre-finished color coat against chipping, cracking or crazing, blistering, peeling, chalking, or fading. Include coverage for weather tightness of building enclosure elements after installation.

2. PRE-ENGINEERED COMPONENTS:
   A. The pre-engineered canopy contains welded steel rigid frame and framing with hipped ends and custom roof slope as shown on Drawings. Manufacturer's standard components may be used, providing that components, accessories, and complete structure conform to Architectural design appearance shown and to specified requirements contained herein.
   B. Primary Framing: Rigid frame of rafter beams and columns, wind bracing canopy beams and canopy beams.
   C. Secondary Framing: Purlins, Girts, Eave struts, Flange bracing, Sill supports, Clips, and opening framing, and other items detailed.
   D. Wall System: Preformed metal panels of vertical profile, with sheathing, insulation, and accessory components.
   E. Roof System: Preformed metal panels oriented parallel to slope.
   F. Roof Slope: See Building Elevations for roof slope.
   G. All interior metal building components shall be galvanized to resist a corrosive environment. Galvanized components include: rigid frames, secondary framing, wall girts, roof purlins, angles, clips, bolts, interior liner panels, and miscellaneous metal building materials located in the corrosive environment.
   H. The Office area (Lab/Break Room to Storage/Electric Room) shall use 10" deep straight leg rigid frame columns to allow metal stud framing to conceal the rigid frame columns.
   I. The Metal Building shall be designed rigid enough by the Metal Building Manufacturer to support anchoring concrete masonry units (CMU) where shown on the Floor Plans.

3. MATERIALS:
   A. Metal Roofing: Roof panels shall be structural standing seam metal pans, 16" wide x nominal 2" deep, 24 gauge with striations equal to MBCI "Batten Lok" system. Factory panted steel using KYNAR 500 finish with color selected by Owner from manufacturer's standard KYNAR color options. Sheets shall have a minimum yield strength of 50 ksi, designed to support 20 psf over a clear span of 5'-0", and be weather tight when installed. Roof panels shall be installed over roof purlins using concealed fastening system. Design roof panels to withstand uplift load of 90 psf (UL 90 rated) with provisions for horizontal and longitudinal expansion and contraction designed into the system. Roof sheets to be formed in a full length with no joint form ridge to eave.
   B. Exterior Wall Panels: Wall panels shall be 24 gauge factory painted using KYNAR 500 finish. Panels shall have a deep profile equal to Alliance Steel, Oklahoma City "LT3.3" panel. Install wall panels on 1-1/2" hat channels installed vertically to metal building framing.
   C. Fascia Panels: Shall be 24 gauge factory painted steel to match roof panels. Rib height may be reduced, however, panel width shall match roof panels.
   D. Soffit Panels: Shall be 12” wide X 1” deep factory painted 24 gauge sheet metal with concealed fasteners and interlocking joints. Install panels as shown on Details. Vent every 4th panel.
   E. Gutters and Downspouts (box gutter profile): Shall be fabricated from 24 gauge factory painted finish over prepared and shaped galvanized 4” x 5” gutter and 4” x 4” matching downspout to match existing gutter profile. Gutters shall be 20' minimum length with expansion joints at 60'-0” o.c.. Attach downspout with concealed straps. Gutter to be attached level and uniformly as indicated by Drawing details.
   F. Flashing, Vents and Flues: Install neoprene and metal roof jacks at all mechanical and plumbing piping penetration through roof, at flashing for furnace and fresh air vent projection. Seal with approved mastic as per roof manufacturer's recommendations to assure weather tightness. All exposed flue pipes, vent caps, flashing and other penetrations must be finished with paint.
   G. Accessories: Provide overhangs, flashings, closures, fillers and trim as indicated or required. Use flexible closure strips of expanded cellular rubber matching configuration of roof or wall sheets, release-paper backed sealing tape or elasomeric polyurethane joint sealer to ensure weathertight construction.
   H. Fasteners: Provide self tapping screws, bolts, nuts, self locking rivets, self locking bolts and other miscellaneous required fastening devices as required by the manufacturer to withstand the design loads. Fasteners shall be concealed. Exposed fasteners will be allowed only where concealed installation is not possible.
   I. Sealants: Field applied material shall be Vulkem one part Polyurethane sealant or approved equal. Field applied sealants in conjunction with TC95 modified isobutylene, tripolymer mastic tape shall be used at all end laps, curbs, roof jacks, ventilators and gutters.
   J. Downspouts and Elbows (square profile): Shall be 4” x 4” 24 gauge factory painted sheet metal. Furnish metal straps as shown on Drawings.
   K. Flashings and Trim: Use 24 gauge factory painted sheet metal of shape and design as shown on drawings. Ridge caps and hip flashings shall be formed to provide weather tight seal. Manufacturer's standard component shapes may be used in lieu of shapes shown on the drawings with Architects approval.
   L. Exterior Metal Finish: All exposed metal roofing, fascias, soffit, flashings and trim shall be galvalume coated and factory painted with KYNAR 500 Finish System. Color of roofs, fascias, gutters and flashings shall be as selected by Architect.
   M. Interior Metal Finish: Mainframes, secondary framing, wall girts, roof purlines, fasteners, flashing, trim, and miscellaneous interior finishes shall have galvanized finish to resist a corrosive environment.
   N. Liner Panel: Use 24 gauge galvalume OR factory painted sheet metal purlin bearing “M” profile panel with equal rib spacing.
   P. Snow Guards: Shall be by LMCurbs S-5 ColorGard 24 gauge factory painted steel to match roofing or approved equal. Install 2" height by 2" wide by 8' lengths attached to S-5 clamps attached to the standing seam with stainless steel bolts provided by manufacturer.

4. INSULATION:
   A. Roof Insulation: Install banded Roof Insulation System throughout entire building at roof deck. Roof insulation system shall be banded using steel straps and fabric supporting batts with an installed total roof insulation value of R-30 and an average installed thickness of 9 inches. Steel strap shall be primed and painted "white" on the exposed side, minimum size to be 0.02"x1" continuous length. Attached steel strap to framing using #12 self-drilling screws and washers for 12 gauge steel. Fabric shall be woven reinforced high-density polyethylene yarns with flame spread index of 25. Finish shall be "white".
   B. Wall Insulation: Install banded Wall Insulation System throughout entire building perimeter walls and between Office area and UV / Belt areas. System shall be a metal strap and fabric system with an installed total wall insulation value of R-19 and average installed thickness of 8 inches. Steel strap shall be primed and painted "white" on the exposed side, minimum size to be 0.02"x1" continuous length. Attached steel strap to framing using #12 self-drilling screws and washers for 12 gauge steel. Fabric shall be woven reinforced high-density polyethylene yarns with flame spread index of 25. Finish shall be "white".

5. ERECTION - FRAMING:
   A. Erect framing in accordance with AISC 360 - Specification for Structural Steel Buildings.
   B. Framing System: Erect all framing in accordance with MBMA Low-Rise Building Systems Manual, Common Industry Practices. Prior to erecting components, clean all mud and dirt from exposed surfaces.
   C. Set structural frames accurately to lines and elevations indicated. Align and adjust various members forming part of complete frame or structure before permanently fastening. Clean bearing surfaces and other areas which will be in permanent contact before assembly. Perform necessary adjustments to compensate for discrepancies in elevations and alignment. Level and plumb individual members of structure within specified AISC tolerances. Do not enlarge misaligned holes in members by burning and do not use gas cutting to correct fabrication errors. All errors and misalignments shall be resolved with the component manufacturer.
   D. Furnish temporary guys and bracing where needed for squaring, plumbing and securing the structural framing against loads, such as wind loads acting on the exposed framing and seismic forces, as well as loads due to erection equipment and erection operation, but not including loads resulting from the performance of work by others. Bracing furnished by the manufacturer for the metal building system cannot be assumed to be adequate during erection. The temporary guys, braces, falseworks and cribbing shall be removed immediately upon completion of erection.

6. ERECTION - WALL AND ROOF PANELS:
   A. Roof System: Install according to building manufacturer's shop drawings and installation manual. Apply insulation blanket and sheeting to structural support members, properly aligned, level and plumb.
   B. Exercise care when cutting pre-finished materials to ensure that cuttings do not remain on finished surfaces. Insulation blankets shall be stretched tight over framing member and shall not be allowed to droop or sag. Overlap vapor barrier tabs and secure insulation with white tape where required. Exercise care to ensure insulation vapor barrier is not torn or damaged. Minor damage may be repaired with white tape, however extensive damage will require replacement of the entire blanket.

7. ERECTION - GUTTERS AND DOWNSPOUTS:
   A. Rigidly support and secure components. Join lengths with formed seams sealed watertight. Flash and seal gutters to downspouts.
   B. Seal all roof and wall accessories weather tight. All work shall be performed in the best workmanlike manner.

WALL ENGINEERING
PO BOX 1457, DURANT, OK 74702
OKLAHOMA CA #5413 EXP. JUNE 30, 2023

SUBMITTAL / REVISIONS:
DATE | BY | SUBMITTAL / REVISION

CITY OF SHAWNEE
WASTEWATER TREATMENT PLANT IMPROVEMENTS
SHAWNEE, OKLAHOMA

SPECIFICATIONS

STATE OF OKLAHOMA
LICENSED ARCHITECT
4970
ADA, OKLAHOMA
3/11/22

REDLAND CHILDERS ARCHITECTS
413 W. 12th
Ada, OK 74820
p. 580-436-0770
f. 580-436.6320
www.rcada.com

PROJECT NO.
#SH-20-21
DATE
March 11, 2022
DRAWN BY:
CHECKED BY:
REVIEWED BY:
SCALE:

BAR IS ONE HALF INCH ON ORIGINAL DRAWING
0' 1/2"
IF NOT ONE HALF INCH ON THIS SHEET, ADJUST SCALES ACCORDINGLY

SHEET
A104

BUILDING CODE INFORMATION

APPLICABLE DESIGN CRITERIA
(APPLICABLE CODES ARE CHECKED)

	NAME	EDITION
X	INTERNATIONAL BUILDING CODE (IBC)	2015
	INTERNATIONAL EXISTING BUILDING CODE (IEBC)	2015
X	INTERNATIONAL FIRE CODE (IFC)	2015
X	INTERNATIONAL MECHANICAL CODE (IMC)	2015
X	INTERNATIONAL PLUMBING CODE (IPC)	2015
X	NATIONAL ELECTRIC CODE (NEC)	2014
	ICC 500: STANDARD FOR THE DESIGN AND CONSTRUCTION OF STORM SHELTERS	2014
X	NFPA 101: LIFE SAFETY CODE	2015
X	ICC / ANSI A117.1	2015

USE AND OCCUPANCY CLASSIFICATION
(IBC CHAPTER 3)

BUILDING NAME	IBC CLASSIFICATION	AREA	OCC. LOAD
WATER TREATMENT PLANT	B - BUSINESS (SECTION 304)	14,093sf	49
ACCESSORY AREAS INDIVIDUALLY CLASSIFIED:			
OFFICE	B - BUSINESS (SECTION 304)	5,642sf	20
BELT FILTER	U - UTILITY (SECTION 312)	4,386sf	15
UV ROOM	U - UTILITY (SECTION 312)	4,065sf	14

GENERAL BUILDING HEIGHTS AND AREAS
(IBC CHAPTER 5)

ALLOWABLE BUILDING HEIGHTS AND AREAS (TABLES 504.3, 504.4, 506.2)		AS-DESIGNED BUILDING HEIGHTS AND AREA	
GROUP	TYPE II B, NONCOMBUSTIBLE	GROUP	TYPE II B, NONCOMBUSTIBLE
HEIGHT (FT)	55	HEIGHT (FT)	24
STORIES	2	STORIES	1
AREA (PER FLOOR)	23,000sf	AREA (PER FLOOR)	14,093sf
AREA (TOTAL)	46,000sf	AREA (TOTAL)	14,093sf

BUILDING AREA MODIFICATIONS (SECTION 506)
BUILDING AREA IS WITHIN LIMITS SPECIFIED IN TABLE 506.2 - AREA INCREASE IS NOT REQUIRED

MIXED USED AND OCCUPANCY (SECTION 508)
BUILDING HAS ACCESSORY OCCUPANCIES THAT ARE ANCILLARY TO THE MAIN OCCUPANCY (SECTION 508.2).
ACCESSORY OCCUPANCIES INDIVIDUALLY CLASSIFIED (SECTION 508.2.1):
-BREAK ROOM, MUD ROOM, STORAGE, ELECTRIC, CHEMICAL ROOM, SLUDGE LOADING, RESTROOMS

INCIDENTIAL USES (SECTION 509)
NOT APPLICABLE

TYPES OF CONSTRUCTION
(IBC CHAPTER 6)

FIRE-RESISTANCE RATING REQUIREMENTS FOR BUILDING ELEMENTS (TABLE 601) TYPE IIB

BUILDING ELEMENT	HOURLY RATING REQUIRED	HOURLY RATING PROVIDED	METHOD OF ACHIEVING RATING
PRIMARY STRUCTURAL FRAME	0	0	N/A
BEARING WALLS - EXTERIOR	0	0	N/A
BEARING WALLS - INTERIOR	0	0	N/A
NONBEARING WALLS - EXTERIOR	0	0	N/A
NONBEARING WALLS - INTERIOR	0	0	N/A
FLOOR CONSTRUCTION AND SECONDARY MEMBERS	0	0	N/A
ROOF CONSTRUCTION AND SECONDARY MEMBERS	0	0	N/A

FIRE-RESISTANCE REQUIREMENTS FOR EXTERIOR WALLS BASED ON FIRE SEPARATION DISTANCE (IBC, TABLE 602) - NOT APPLICABLE

FIRE AND SMOKE PROTECTION FEATURES
(IBC CHAPTER 7)

MAXIMUM AREA OF EXTERIOR WALL OPENINGS BASED ON FIRE SEPARATION DISTANCE AND DEGREE OF OPENING PROTECTION (TABLE 705.8)
NOT APPLICABLE

FIRE WALL FIRE-RESISTANCE RATINGS (TABLE 706.4)
NOT APPLICABLE

FIRE-RESISTANCE RATINGS FOR FIRE BARRIER ASSEMBLIES OR HORIZONTAL ASSEMBLIES BETWEEN FIRE AREAS (TABLE 707.3.10)
2-HOUR PROVIDED BETWEEN BUSINESS AND UTILITY AREAS

FIRE PARTITIONS (SECTION 708)
CORRIDORS NOT REQUIRED TO BE RATED (TABLE 1020.1, EXCEPTION #4)

INTERIOR FINISHES
(IBC CHAPTER 8)

INTERIOR WALL AND CEILING FINISH REQUIREMENTS BY OCCUPANCY (TABLE 803.11)

	SPRINKLERED			NONSPRINKLERED		
GROUP	EXITS	CORRIDORS	ROOMS	EXITS	CORRIDORS	ROOMS
B - BUSINESS	CLASS-B	CLASS-C	CLASS-C	CLASS-A	CLASS-B	CLASS-C
U - UTILITY	N/R	N/R	N/R	N/R	N/R	N/R

FIRE PROTECTION SYSTEMS
(IBC CHAPTER 9)

AUTOMATIC SPRINKLER SYSTEMS (SECTION 903)

STATUS	AUTOMATIC SPRINKLER SYSTEM IS NOT REQUIRED OR PROVIDED
GROUP	BUSINESS B (SECTION 903)

ALTERNATIVE AUTOMATIC FIRE-EXTINGUISHING SYSTEMS (SECTION 904)

STATUS	AUTOMATIC FIRE-EXTINGUISHING SYSTEM IS NOT REQUIRED OR PROVIDED
WHERE	N/A

PORTABLE FIRE EXTINGUISHERS (SECTION 906)

FIRE EXTINGUISHERS FOR CLASS A FIRE HAZARDS (SECTION 906.3(1))

	ORDINARY (MODERATE) HAZARD OCCUPANCY	EXTINGUISHERS AS PROVIDED
MIN. RATED SINGLE EXTINGUISHER	2-A	
MAXIMUM FLOOR AREA PER UNIT OF A	3,000sf	14,093sf / 3,000sf = 5 EXTINGUISHERS
MAXIMUM FLOOR AREA FOR EXTINGUISHER	11,250sf	BUILDING AREA LESS THAN MAX. FLOOR AREA
MAXIMUM TRAVEL DISTANCE TO EXTINGUISHER	75 FEET	

FIRE ALARM AND DETECTION SYSTEMS (SECTION 907.2.2)

GROUP B - BUSINESS		
FIRE ALARM SYSTEM	MANUAL	NOT REQUIRED
SMOKE DETECTION SYSTEM	AUTOMATIC	NOT REQUIRED
OCCUPANCY NOTIFICATION SYSTEM	AUTOMATIC	NOT REQUIRED
EMERGENCY LIGHTING	AUTOMATIC	REQUIRED
EXIT SIGNS		REQUIRED

MEANS OF EGRESS
(IBC CHAPTER 10)

FLOOR AREA ALLOWANCE PER OCCUPANT (TABLE 1004.1.2)

OCCUPANCY TYPE	SF/PERSON	OCCUPANCY LOAD
B - BUSINESS	100 GROSS	20 OCCUPANTS
U - UTILITY	300 GROSS	29 OCCUPANTS
TOTAL OCCUPANT LOAD		49 TOTAL OCCUPANTS

OCCUPANCY SUMMARY	
OFFICES	4 OCCUPANTS
CONFERENCE	10 OCCUPANTS
LIBRARY / CONTROL RM	3 OCCUPANTS
LAB	3 OCCUPANTS
UV ROOM	14 OCCUPANTS
BELT FILTER	15 OCCUPANTS
TOTAL	49 TOTAL OCCUPANTS

MEANS OF EGRESS SIZING (SECTION 1005)

EGRESS WIDTH	MIN. EGRESS WIDTH (0.2 INCH PER PERSON)	TOTAL EGRESS WIDTH S DESIGNED
PATH-A (CONTROL ROOM / CONFERENCE)	0.2 x 13 OCCUPANTS = 2.6 INCH (32 MIN.)	36 INCH
PATH-B (OFFICES)	0.2 x 4 OCCUPANTS = 0.8 INCH (32 MIN.)	36 INCH
PATH-C (LAB)	0.2 x 3 OCCUPANTS = 0.6 INCH (32 MIN.)	36 INCH
PATH-D (CHEM STORAGE)	0.2 x 5 OCCUPANTS = 1 INCH (32 MIN.)	36 INCH
PATH-E (BELT FILTER)	0.2 x 5 OCCUPANTS = 1 INCH (32 MIN.)	36 INCH
PATH-F (BELT FILTER)	0.2 x 5 OCCUPANTS = 1 INCH (32 MIN.)	36 INCH
PATH-G (UV ROOM)	0.2 x 7 OCCUPANTS = 1.4 INCH (32 MIN.)	36 INCH
PATH-H (UV ROOM)	0.2 x 7 OCCUPANTS = 1.4 INCH (32 MIN.)	36 INCH

MEANS OF EGRESS ILLUMINATION (SECTION 1008)

EMERGENCY LIGHTING	AUTOMATIC	REQUIRED

ACCESSIBLE MEANS OF EGRESS (SECTION 1009)
ACCESSIBLE SPACES SHALL BE PROVIDED WITH NOT LESS THAN ONE ACCESSIBLE MEANS OF EGRESS. WHERE MORE THAN ONE MEANS OF EGRESS IS REQUIRED BY SECTION 1006.2 OR 1006.3 FROM ANY ACCESSIBLE SPACE, EACH ACCESSIBLE PORTION OF THE SPACE SHALL BE SERVED BY NOT LESS THAN TWO ACCESSIBLE MEANS OF EGRESS.

DOOR SWING (SECTION 1010.1.2.1)
DOOR SHALL SWING IN THE DIRECTION OF EGRESS TRAVEL WHERE SERVING AN OCCUPANT LOAD OF 50 OR MORE PERSONS.

EXIT SIGNS (SECTION 1013)

EXIT SIGNS	AUTOMATIC	REQUIRED

EXIT AND EXIT ACCESS DOORS SHALL BE MARKED BY AN APPROVED EXIT SIGN READILY VISIBLE FROM ANY DIRECTION OF EGRESS TRAVEL.

EXIT ACCESS TRAVEL DISTANCE (SECTION 1017, TABLE 1017.2)

OCCUPANCY	COMPONENT	EXIT TRAVEL DISTANCE	
		ALLOWABLE	AS DESIGNED
BUSINESS (B)	COMMON PATH OF TRAVEL	200 FEET (WITHOUT SPRINKLER)	84 FEET (SEE LIFE SAFETY PLAN)
	DEAD END CORRIDORS	50 FEET (PER IBC) 20 FEET (NFPA 101)	**NO DEAD END CORRIDORS
	TRAVEL TO EXIT	200 FEET (NFPA 101 14.2.6.2)	

CORRIDOR FIRE RESISTANCE RATING (TABLE 1020.1)
0-HOUR DUE TO OCCUPANT LOAD PER 1020.1 EXCEPTION #4 AND SECTION 1006.2.

CORRIDOR WIDTH (IBC, SECTION 1020.2)
36 INCHES, WITH AN OCCUPANT LOAD OF LESS THAN 50.

PLUMBING SYSTEMS FEATURES
(IBC CHAPTER 29)

PLUMBING SYSTEMS (TABLE 2902.1)

REQUIRED

		WATER CLOSETS		LAVATORIES		BATHTUBS OR SHOWER	DRINKING FOUNTAINS	OTHER
CLASSIFICATION	OCCUPANCY	MALE	FEMALE	MALE	FEMALE			
BUSINESS (B)	49 25 (MALE) 24 (FEMALE)	1 PER 25/50	1 PER 25/50	1 PER 40/80	1 PER 40/80		1 PER 100	1 SERVICE SINK REQUIRED
		1 REQUIRED	1 REQUIRED	1 REQUIRED	1 REQUIRED	N/A	1 REQUIRED	

PROVIDED (AS DESIGNED)

		WATER CLOSETS		LAVATORIES		BATHTUBS OR SHOWER	DRINKING FOUNTAINS	OTHER
CLASSIFICATION	OCCUPANCY	MALE	FEMALE / UNISEX	MALE	FEMALE / UNISEX			
BUSINESS (B)	49 42 (MALE) 43 (FEMALE)	1 W.C.	1 W.C.	1	1	1	1 BOTTLED WATER DISP. BY OWNER	1

REDLAND CHILDERS ARCHITECTS
413 W. 12th
Ada, OK 74820
p. 580-436-0770
f. 580-436.6320
www.rcada.com

WALL ENGINEERING
PO BOX 1457, DURANT, OK 74702
OKLAHOMA CA #6413 EXP. JUNE 30, 2023

SUBMITTAL / REVISIONS:
DATE | BY | SUBMITTAL / REVISION

CITY OF SHAWNEE
WASTEWATER TREATMENT PLANT IMPROVEMENTS
SHAWNEE, OKLAHOMA

LIFE SAFETY INFORMATION

PROJECT NO.
#SH-20-21
DATE
March 11, 2022
DRAWN BY:
CHECKED BY:
REVIEWED BY:
SCALE:

BAR IS ONE HALF INCH ON ORIGINAL DRAWING
0" 1/2"
IF NOT ONE HALF INCH ON THIS SHEET, ADJUST SCALES ACCORDINGLY

SHEET
A105

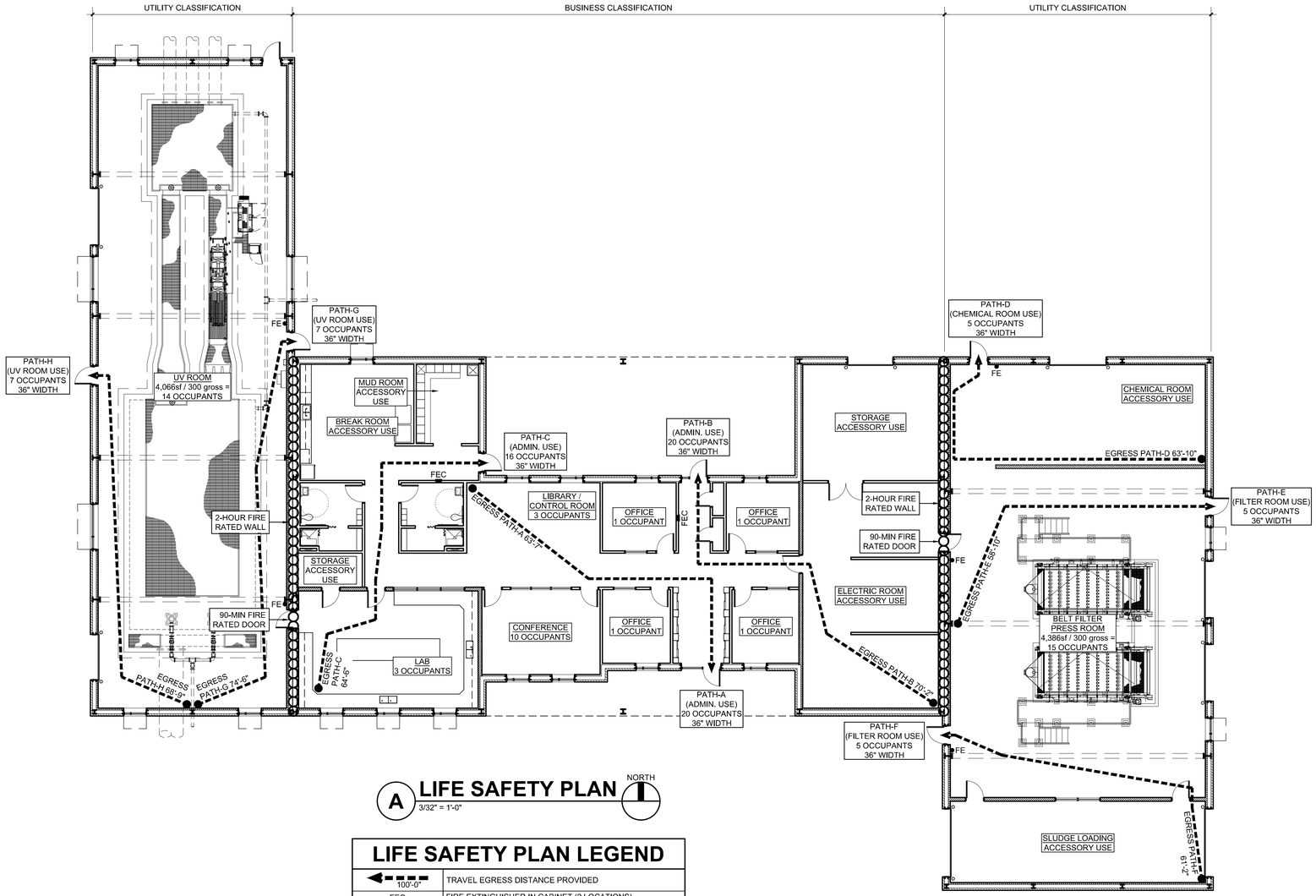

A LIFE SAFETY PLAN

3/32" = 1'-0"

NORTH

LIFE SAFETY PLAN LEGEND

100'-0"	TRAVEL EGRESS DISTANCE PROVIDED
FEC	FIRE EXTINGUISHER IN CABINET (2 LOCATIONS)
FE	FIRE EXTINGUISHER - MOUNTED ON BRACKET ONLY (5 LOCATIONS)
	2-HOUR FIRE RATED WALL - SEE WALL SECTION DETAIL C/A502

WALL ENGINEERING
PO BOX 1457, DURANT, OK 74702
OKLAHOMA CA #5413 EXP. JUNE 30, 2023

SUBMITTAL / REVISIONS:

DATE	BY	SUBMITTAL / REVISION

CITY OF SHAWNEE
WASTEWATER TREATMENT PLANT IMPROVEMENTS
SHAWNEE, OKLAHOMA

LIFE SAFETY PLAN

PROJECT NO. #SH-20-21
DATE March 11, 2022
DRAWN BY:
CHECKED BY:
REVIEWED BY:
SCALE:

BAR IS ONE HALF INCH ON ORIGINAL DRAWING
0" 1/2"
IF NOT ONE HALF INCH ON THIS SHEET, ADJUST SCALES ACCORDINGLY

STATE OF OKLAHOMA
4970
3/11/22
LICENSED ARCHITECT

REDLAND CHILDERS ARCHITECTS
413 W. 12th
Ada, OK 74820
p. 580-436-0770
f. 580-436.6320
www.rcada.com

SHEET
A106

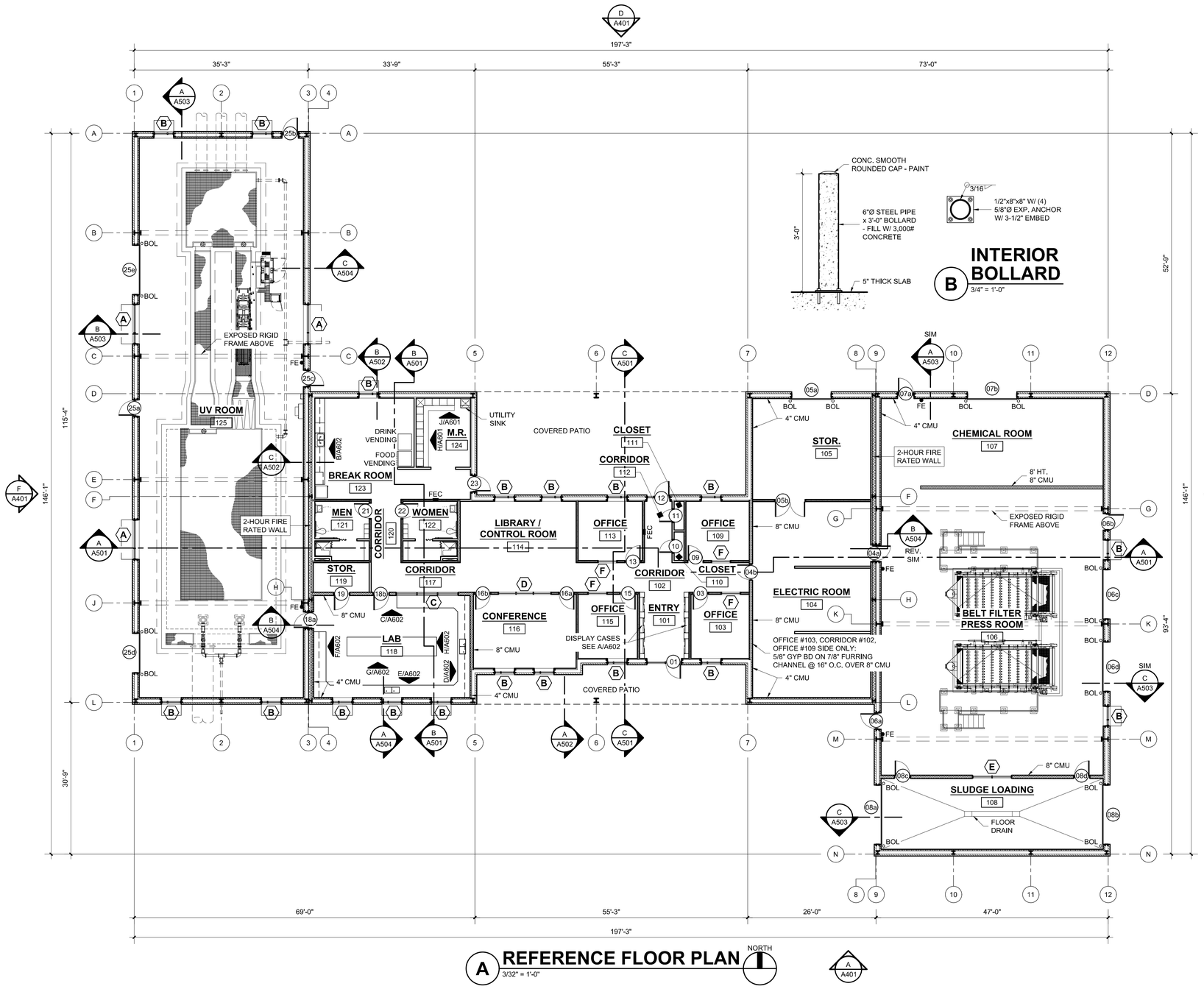

INTERIOR BOLLARD

B — 3/4" = 1'-0"

REFERENCE FLOOR PLAN

A — 3/32" = 1'-0"

NORTH

PLAN LEGEND

	CULTURED STONE SYSTEM, 1/2" DENS GLASS (BELOW) / METAL WALL PANEL (ABOVE), 1-1/2" METAL HAT CHANNEL @ 16" O.C., FABRIC VAPOR BARRIER, METAL BUILDING FRAMING, R-19 BANDED WALL INSULATION, 2-1/2" METAL STUDS @ 16" O.C., 5/8" GYP. BD.
	CULTURED STONE SYSTEM, 1/2" DENS GLASS (BELOW) / METAL WALL PANEL (ABOVE), 1-1/2" METAL HAT CHANNEL @ 16" O.C., FABRIC VAPOR BARRIER, METAL BUILDING FRAMING, R-19 BANDED WALL INSULATION, 4" CMU WALLS
	CULTURED STONE SYSTEM, 1/2" DENS GLASS (BELOW) / METAL WALL PANEL (ABOVE), 1-1/2" METAL HAT CHANNEL @ 16" O.C., FABRIC VAPOR BARRIER, METAL BUILDING FRAMING, R-19 BANDED WALL INSULATION, 4" CMU WALLS (BELOW), PREFINISHED 24 GA. METAL LINER PANEL (ABOVE) @ UV ROOM AND BELT FILTER PRESS ROOM
	8" CMU WALLS
	5/8" GYP. BD. (EA. SIDE) OVER 6" METAL STUDS @ 16" O.C.
	5/8" GYP. BD. (EA. SIDE) OVER 3-5/8" METAL STUDS @ 16" O.C.
	INDICATES FULL STUD WIDTH SOUND INSULATION INSIDE WALL CAVITY
FEC	FIRE EXTINGUISHER IN CABINET
FE	FIRE EXTINGUISHER
BOL	INTERIOR BOLLARD

BLOCKING NOTE:
INSTALL 2X10 WOOD BLOCKING OR 20 GA. 10" WIDE METAL BACKING PLATE FOR ALL WALL MOUNTED DEVICES INCLUDING CABINETS, GRAB BARS, TOILET ACCESSORY'S...ETC.

PLUMBING WALL:
INSTALL 6" METAL STUDS AT PLUMBING "WET" WALL LOCATION

SOUND INSULATION:
INSTALL FULL STUD WIDTH SOUND INSULATION WHERE SHOWN AT OFFICES, RESTROOMS, CONFERENCE ROOM, AND LAB - INSTALL FOAMED IN PLACE OR LOOSE FILL INSULATION TO 8" CMU WALLS.

4" CMU THERMAL INSULATION:
INSTALL FOAMED IN PLACE THERMAL INSULATION TO ALL 4" PERIMETER (EXTERIOR) WALLS.

METAL BUILDING MATERIAL FINISH NOTE:
ALL METAL BUILDING MATERIALS SHALL BE GALVANIZED TO RESIST A CORROSIVE ENVIRONMENT

-MAIN FRAMES SHALL BE HOT DIPPED GALVANIZED

-ALL REMAINING COMPONENTS (SECONDARY FRAMING, FASTENERS, TRIM) SHALL BE GALVANIZED

ROOM FINISHES:
SEE SHEET A701 FOR ROOM FINISH SCHEDULE & LEGEND

CMU WALLS:
INSTALL 4" CMU (METAL LINER PANELS ABOVE IN UV ROOM, BELT FILTER, CHEMICAL ROOM, SLUDGE LOADING) TO ALL BUILDING PERIMETER WALLS AND 8" CMU TO INTERIOR WALLS.

WALL ENGINEERING
PO BOX 1457, DURANT, OK 74702
OKLAHOMA CA #5413 EXP. JUNE 30, 2023

SUBMITTAL / REVISIONS:
DATE | BY | SUBMITTAL / REVISION

CITY OF SHAWNEE
WASTEWATER TREATMENT PLANT IMPROVEMENTS
SHAWNEE, OKLAHOMA

REFERENCE FLOOR PLAN

PROJECT NO.
#SH-20-21
DATE
March 11, 2022
DRAWN BY:
CHECKED BY:
REVIEWED BY:
SCALE:

BAR IS ONE HALF INCH ON ORIGINAL DRAWING
0" 1/2"
IF NOT ONE HALF INCH ON THIS SHEET, ADJUST SCALES ACCORDINGLY

STATE OF OKLAHOMA — TIMOTHY E. REDLAND — 19970 — 3/11/22 — LICENSED ARCHITECT

REDLAND CHILDERS ARCHITECTS
413 W. 12th
Ada, OK 74820
p. 580-436-0770
f. 580-436.6320
www.rcada.com

SHEET
A201

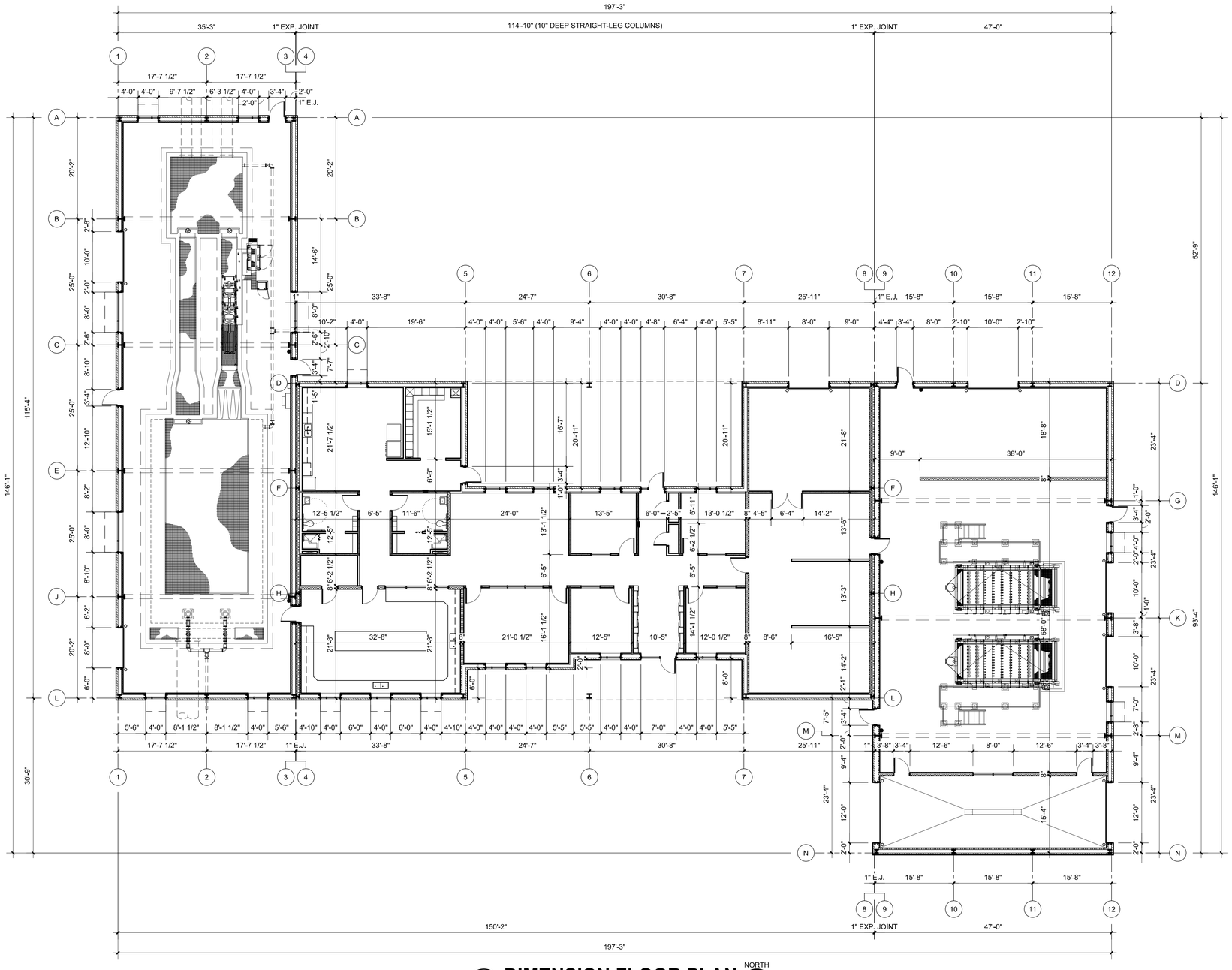

A DIMENSION FLOOR PLAN

3/32" = 1'-0"

NORTH

PLAN LEGEND

	CULTURED STONE SYSTEM, 1/2" DENS GLASS (BELOW) / METAL WALL PANEL (ABOVE), 1-1/2" METAL HAT CHANNEL @ 16" O.C., FABRIC VAPOR BARRIER, METAL BUILDING FRAMING, R-19 BANDED WALL INSULATION, 2-1/2" METAL STUDS @ 16" O.C., 5/8" GYP. BD.
	CULTURED STONE SYSTEM, 1/2" DENS GLASS (BELOW) / METAL WALL PANEL (ABOVE), 1-1/2" METAL HAT CHANNEL @ 16" O.C., FABRIC VAPOR BARRIER, METAL BUILDING FRAMING, R-19 BANDED WALL INSULATION, 4" CMU WALLS
	CULTURED STONE SYSTEM, 1/2" DENS GLASS (BELOW) / METAL WALL PANEL (ABOVE), 1-1/2" METAL HAT CHANNEL @ 16" O.C., FABRIC VAPOR BARRIER, METAL BUILDING FRAMING, R-19 BANDED WALL INSULATION, 4" CMU WALLS (BELOW), PREFINISHED 24 GA. METAL LINER PANEL (ABOVE) @ UV ROOM AND BELT FILTER PRESS ROOM
	8" CMU WALLS
	5/8" GYP. BD. (EA. SIDE) OVER 6" METAL STUDS @ 16" O.C.
	5/8" GYP. BD. (EA. SIDE) OVER 3-5/8" METAL STUDS @ 16" O.C.
	INDICATES FULL STUD WIDTH SOUND INSULATION INSIDE WALL CAVITY
FEC	FIRE EXTINGUISHER IN CABINET
FE	FIRE EXTINGUISHER

DIMENSION NOTE:
DIMENSIONS ARE TO THE SLAB EDGE / STEEL LINE AND CENTER OF INTERIOR STUD PARTITIONS OR FACE OF CMU WALL.

BLOCKING NOTE:
INSTALL 2X10 WOOD BLOCKING OR 20 GA. 10" WIDE METAL BACKING PLATE FOR ALL WALL MOUNTED DEVICES INCLUDING CABINETS, GRAB BARS, TOILET ACCESSORY'S...ETC.

PLUMBING WALL:
INSTALL 6" METAL STUDS AT PLUMBING "WET" WALL LOCATION

SOUND INSULATION:
INSTALL FULL STUD WIDTH SOUND INSULATION WHERE SHOWN AT OFFICES, RESTROOMS, CONFERENCE ROOM, AND LAB - INSTALL FOAMED IN PLACE OR LOOSE FILL INSULATION TO 8" CMU WALLS.

WINDOW OPENING:
CENTER INTERIOR WINDOW IN WALL UNLESS NOTED OTHERWISE.

4" CMU THERMAL INSULATION:
INSTALL FOAMED IN PLACE THERMAL INSULATION TO ALL 4" PERIMETER (EXTERIOR) WALLS.

METAL BUILDING MATERIAL FINISH NOTE:
ALL METAL BUILDING MATERIALS SHALL BE GALVANIZED TO RESIST A CORROSIVE ENVIRONMENT

-MAIN FRAMES SHALL BE HOT DIPPED GALVANIZED

-ALL REMAINING COMPONENTS (SECONDARY FRAMING, FASTENERS, TRIM) SHALL BE GALVANIZED

STATE OF OKLAHOMA
CHRISTOPHER J. REDLAND
4970
3/11/22
LICENSED ARCHITECT

REDLAND CHILDERS ARCHITECTS
413 W. 12th
Ada, OK 74820
p. 580-436-0770
f. 580-436.6320
www.rcada.com

WALL ENGINEERING
PO BOX 1457, DURANT, OK 74702
OKLAHOMA CA #6413 EXP. JUNE 30, 2023

SUBMITTAL / REVISIONS:

DATE	BY	SUBMITTAL / REVISION

CITY OF SHAWNEE
WASTEWATER TREATMENT PLANT IMPROVEMENTS
SHAWNEE, OKLAHOMA

DIMENSION FLOOR PLAN

PROJECT NO.
#SH-20-21

DATE
March 11, 2022

DRAWN BY:

CHECKED BY:

REVIEWED BY:

SCALE:

BAR IS ONE HALF INCH ON ORIGINAL DRAWING
0" 1/2"
IF NOT ONE HALF INCH ON THIS SHEET, ADJUST SCALES ACCORDINGLY

SHEET

A202

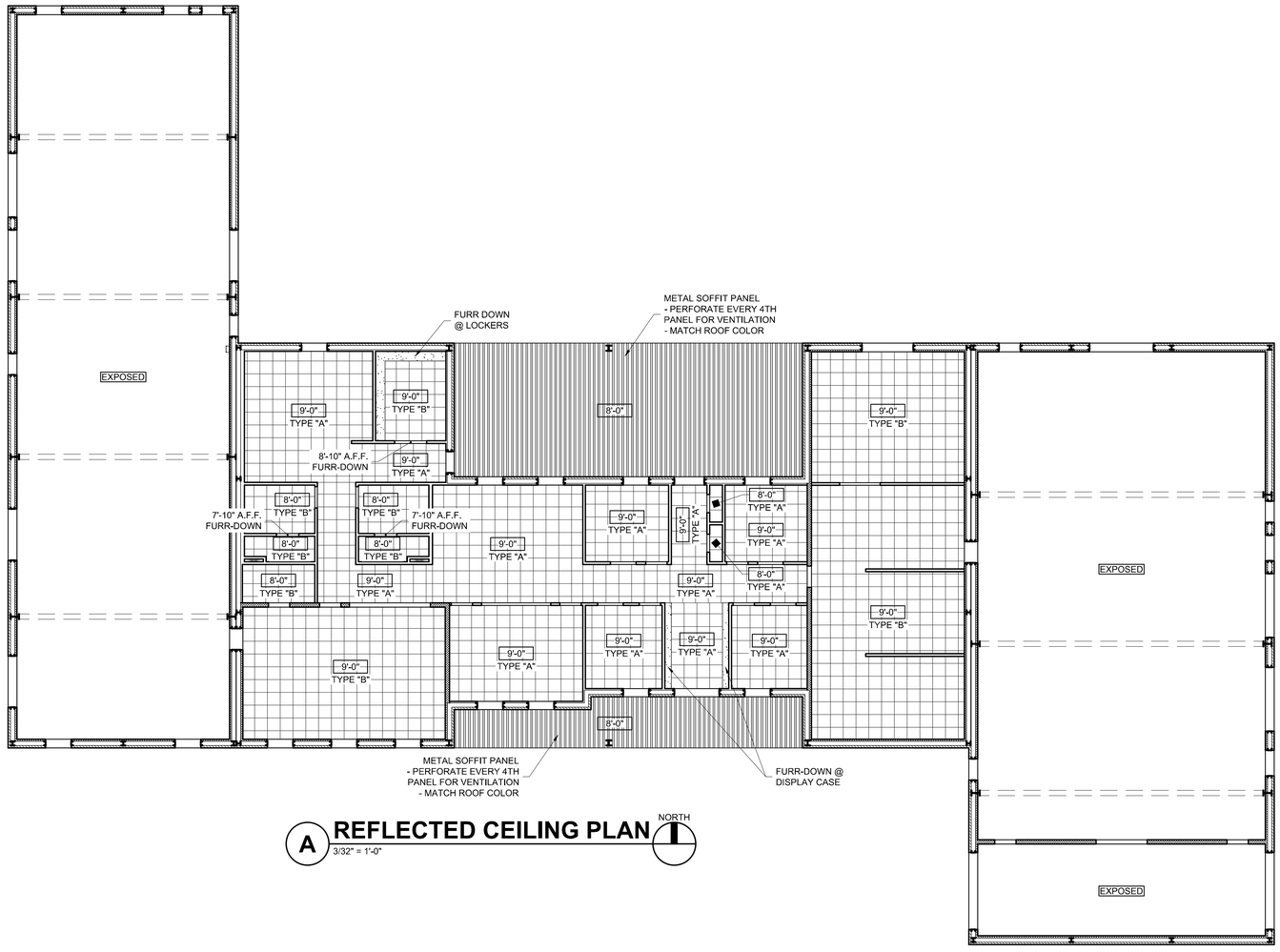

A REFLECTED CEILING PLAN

3/32" = 1'-0"

NORTH

CEILING LEGEND

	METAL SOFFIT SYSTEM
	2'x2' LAY-IN ACOUSTIC GRID CEILING - TYPE "A" = ACOUSTIC TILES W/ TEGULAR EDGE - TYPE "B" = GYPSUM BOARD TILES
9'-0"	CEILING HEIGHT REFERENCE
EXPOSED	NO FINISHED CEILING - EXPOSED TO ROOF STRUCTURAL ABOVE
A.F.F.	ABOVE FINISH FLOOR

CEILING NOTES:

1. COORDINATE THIS CEILING PLAN WITH THE HVAC PLAN AND LIGHTING PLAN. NOTIFY ARCHITECT OF ANY DISCREPANCIES.
2. FINISH ALL EXPOSED SIDES OF DRYWALL FURR DOWNS.

STATE OF OKLAHOMA
REGISTERED
4970
3/11/23
OKLAHOMA
LICENSED ARCHITECT

REDLAND CHILDERS ARCHITECTS
413 W. 12th
Ada, OK 74820
p. 580-436-0770
f. 580-436-6320
www.rcada.com

WALL ENGINEERING
PO BOX 1457, DURANT, OK 74702
OKLAHOMA CA #5413 EXP. JUNE 30, 2023

SUBMITTAL / REVISIONS:

DATE	BY	SUBMITTAL / REVISION

CITY OF SHAWNEE
WASTEWATER TREATMENT PLANT IMPROVEMENTS
SHAWNEE, OKLAHOMA

REFLECTED CEILING PLAN

PROJECT NO.
#SH-20-21

DATE
March 11, 2022

DRAWN BY:

CHECKED BY:

REVIEWED BY:

SCALE:

BAR IS ONE HALF INCH ON ORIGINAL DRAWING
0" 1/2"
IF NOT ONE HALF INCH ON THIS SHEET, ADJUST SCALES ACCORDINGLY

SHEET

A301

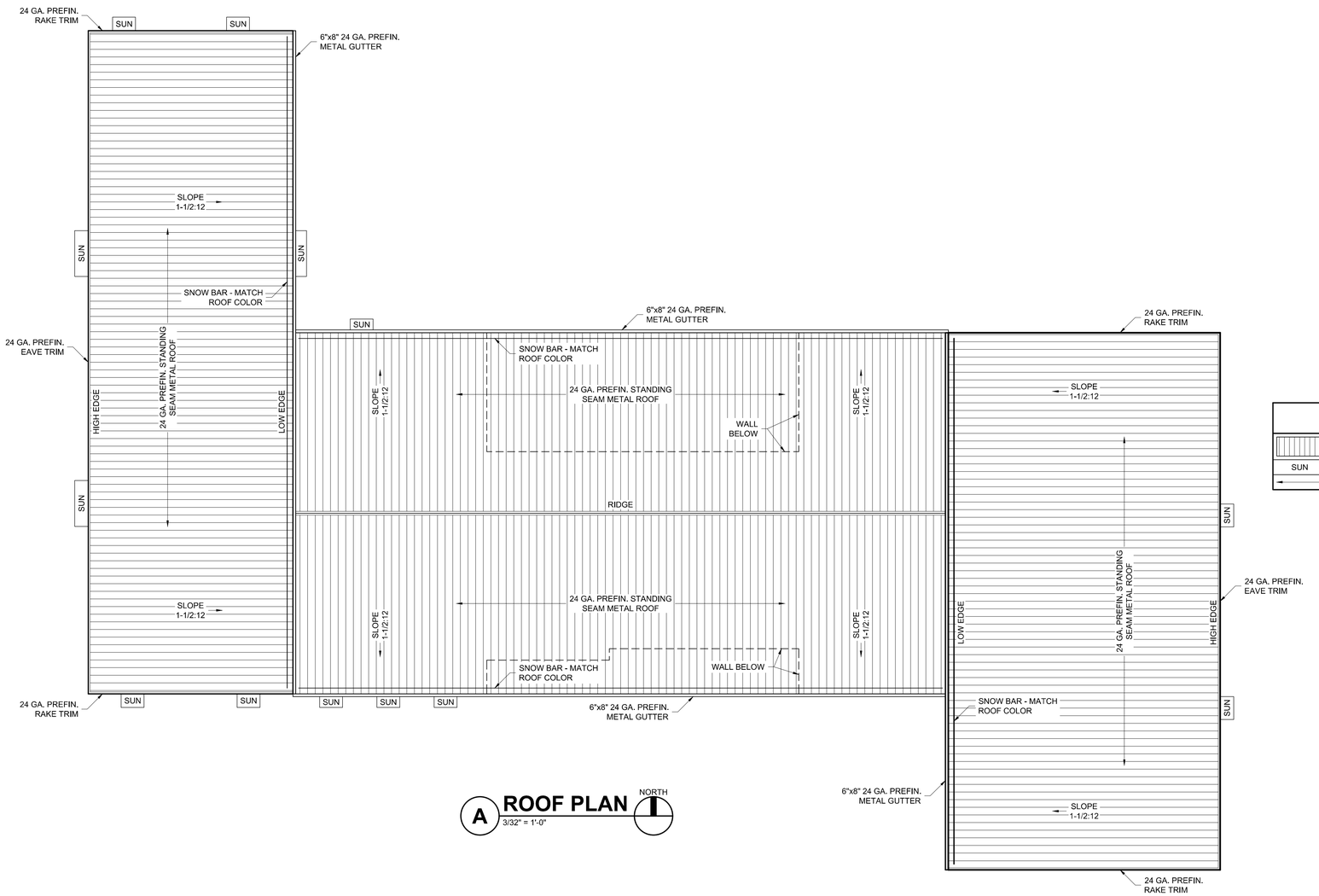

A ROOF PLAN
3/32" = 1'-0"

NORTH

PLAN LEGEND

	PREFIN. METAL STANDING SEAM ROOF
SUN	ALUM. SUNSCREEN BY WINDOW MANUF.
→	DIRECTION OF ROOF SLOPE DOWN

REDLAND CHILDERS ARCHITECTS
413 W. 12th
Ada, OK 74820
p. 580-436-0770
f. 580-436-6320
www.rcada.com

STATE OF OKLAHOMA
JOHN E. REDLAND
19970
3/11/22
REGISTERED
OKLAHOMA
LICENSED ARCHITECT

WALL ENGINEERING
PO BOX 1457, DURANT, OK 74702
OKLAHOMA CA #5413 EXP. JUNE 30, 2023

SUBMITTAL / REVISIONS:

DATE	BY	SUBMITTAL / REVISION

CITY OF SHAWNEE
WASTEWATER TREATMENT PLANT IMPROVEMENTS
SHAWNEE, OKLAHOMA

ROOF PLAN

PROJECT NO.
#SH-20-21
DATE
March 11, 2022
DRAWN BY:
CHECKED BY:
REVIEWED BY:
SCALE:

BAR IS ONE HALF INCH ON ORIGINAL DRAWING
0" 1/2"
IF NOT ONE HALF INCH ON THIS SHEET, ADJUST SCALES ACCORDINGLY

SHEET
A302

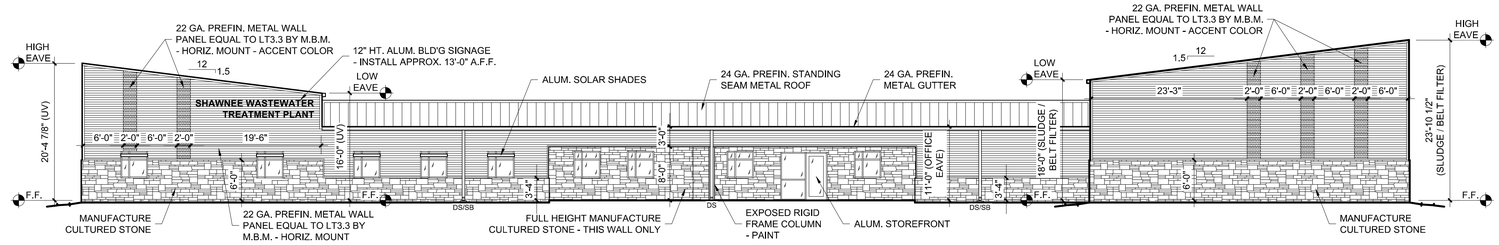

A SOUTH ELEVATION
3/32" = 1'-0"

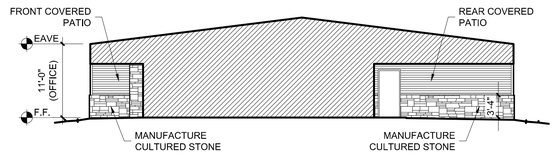

B EAST ELEVATION
3/32" = 1'-0"

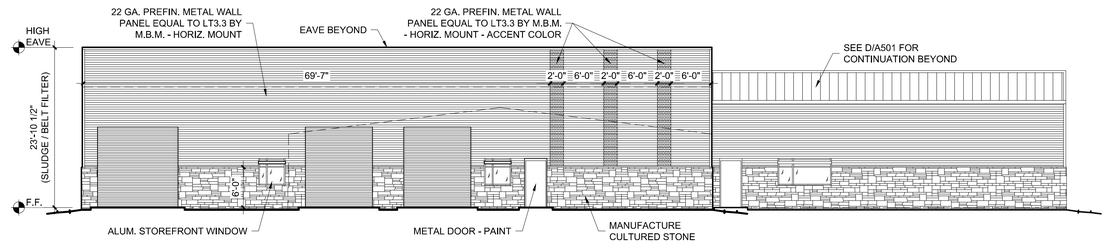

C EAST ELEVATION
3/32" = 1'-0"

ADDITIONAL BUILDING ELEVATIONS:
SEE SHEET A501 (BUILDING SECTIONS) FOR ADDITIONAL BUILDING ELEVATIONS SHOWING UV AND BELT DOWNSPOUTS

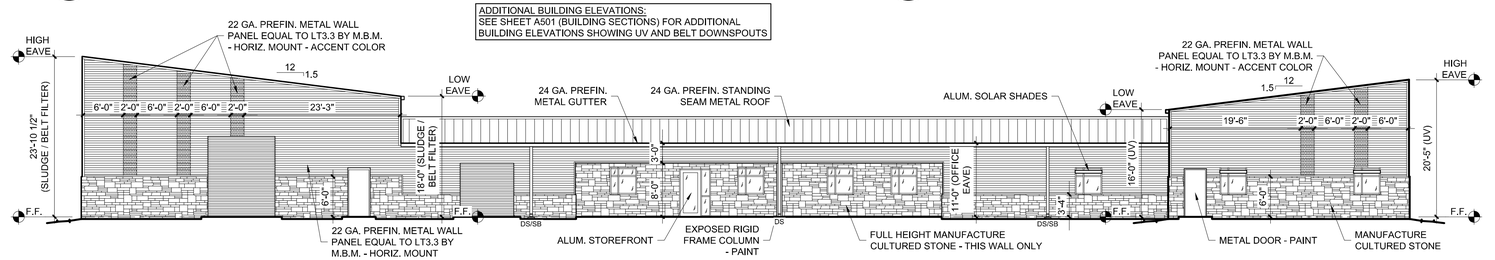

D NORTH ELEVATION
3/32" = 1'-0"

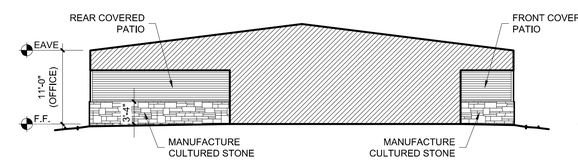

E WEST ELEVATION
3/32" = 1'-0"

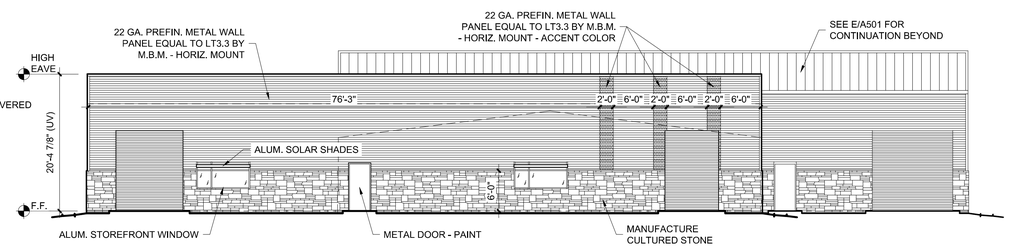

F WEST ELEVATION
3/32" = 1'-0"

WALL ENGINEERING
PO BOX 1457, DURANT, OK 74702
OKLAHOMA CA #5413 EXP. JUNE 30, 2023

SUBMITTAL / REVISIONS:

DATE	BY	SUBMITTAL / REVISION

CITY OF SHAWNEE
WASTEWATER TREATMENT PLANT IMPROVEMENTS
SHAWNEE, OKLAHOMA

BUILDING ELEVATION

PROJECT NO.
#SH–20–21
DATE
March 11, 2022
DRAWN BY:
CHECKED BY:
REVIEWED BY:
SCALE:

BAR IS ONE HALF INCH ON ORIGINAL DRAWING
0" 1/2"
IF NOT ONE HALF INCH ON THIS SHEET, ADJUST SCALES ACCORDINGLY

STATE OF OKLAHOMA · 4970 · 3/11/22 · REGISTERED · LICENSED ARCHITECT

REDLAND CHILDERS ARCHITECTS
413 W. 12th
Ada, OK 74820
p. 580-436-0770
f. 580-436-6320
www.rcada.com

SHEET
A401

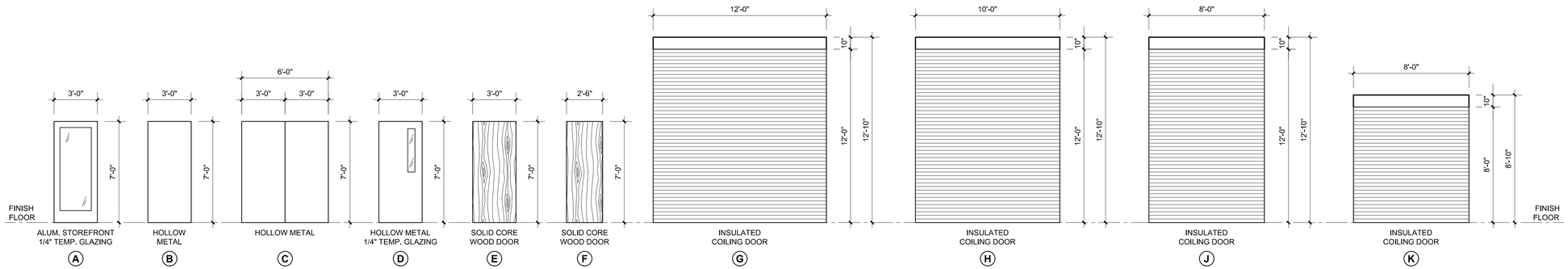

DOOR SCHEDULE

MARK	DOOR SIZE	DOOR THK.	DOOR ELEV	DOOR MATL.	FRAME THK.	FRAME ELEV	FRAME MATL.	FRAME DETAILS	REMARKS
01	3'-0" x 7'-0"	1 3/4"	A	AL	4 1/2"	A	AL		
02	NOT USED								
03	3'-0" x 7'-0"	1 3/4"	E	SW	6"	E	HM		
04a	3'-0" x 7'-0"	1 3/4"	D	HM	8"	D	HM		90-MIN FIRE RATED
04b	3'-0" x 7'-0"	1 3/4"	D	HM	6"	D	HM		
05a	8'-0" x 8'-0"		K						
05b	3'-0" x 7'-0" PAIR	1 3/4"	C	HM	6"	C	HM		
06a	3'-0" x 7'-0"	1 3/4"	B	HM	8"	D	HM		
06b	3'-0" x 7'-0"	1 3/4"	B	HM	8"	D	HM		
06c	10'-0" x 12'-0"		H						
06d	10'-0" x 12'-0"		H						
07a	3'-0" x 7'-0"	1 3/4"	B	HM	8"	D	HM		
07b	10'-0" x 12'-0"		H						
08a	12'-0" x 12'-0"		G						
08b	12'-0" x 12'-0"		G						
08c	3'-0" x 7'-0"	1 3/4"	D	HM	8"	D	HM		
08d	3'-0" x 7'-0"	1 3/4"	D	HM	8"	D	HM		
09	3'-0" x 7'-0"	1 3/4"	E	SW	6"	E	HM		
10	2'-6" x 7'-0"	1 3/4"	F	SW	6"	F	HM		
11	2'-6" x 7'-0"	1 3/4"	F	SW	6"	F	HM		
12	3'-0" x 7'-0"	1 3/4"	A	AL	4 1/2"	B	AL		
13	3'-0" x 7'-0"	1 3/4"	E	SW	6"	E	HM		
14	NOT USED								
15	3'-0" x 7'-0"	1 3/4"	E	SW	6"	E	HM		
16a	3'-0" x 7'-0"	1 3/4"	E	SW	6"	E	HM		
16b	3'-0" x 7'-0"	1 3/4"	E	SW	6"	E	HM		
17	NOT USED								
18a	3'-0" x 7'-0"	1 3/4"	D	HM	8"	D	HM		90-MIN FIRE RATED
18b	3'-0" x 7'-0"	1 3/4"	E	SW	8"	D	HM		
19	3'-0" x 7'-0"	1 3/4"	E	SW	8"	D	HM		
20	NOT USED								
21	3'-0" x 7'-0"	1 3/4"	E	SW	6"	E	HM		
22	3'-0" x 7'-0"	1 3/4"	E	SW	6"	E	HM		
23	3'-0" x 7'-0"	1 3/4"	D	HM	8"	E	HM		
24	NOT USED								
25a	3'-0" x 7'-0"	1 3/4"	B	HM	8"	D	HM		
25b	3'-0" x 7'-0"	1 3/4"	B	HM	8"	D	HM		
25c	3'-0" x 7'-0"	1 3/4"	B	HM	8"	D	HM		
25d	8'-0" x 12'-0"		J						
25e	10'-0" x 12'-0"		H						

DOOR ABBREVIATIONS:
AL = PRE-FINISHED ANODIZED ALUMINUM
HM = PAINTED HOLLOW METAL
SW = STAINED SOLID CORE WOOD

DOOR SCHEDULE NOTES:
1. FRAME THICKNESS LISTED IS THE SIZE OF THE METAL STUD WALL FRAMING AND IS INTENDED AS A REFERENCE GUIDE FOR THE FRAME THROAT WIDTH. FOR FRAME THROAT DIMENSIONS, ADD (2) TOTAL LAYERS OF 5/8" GYP. BD. (ONE ON EACH SIDE) FOR A TOTAL THROAT THICKNESS. INSTALL HOLLOW METAL FRAMES WITH EITHER A 1/2" OR 7/16" BACK BEND. ALL HOLLOW METAL FRAMES SHALL PROTECT DOOR JAMB DRYWALL.

A DOOR ELEVATION
1/4" = 1'-0"

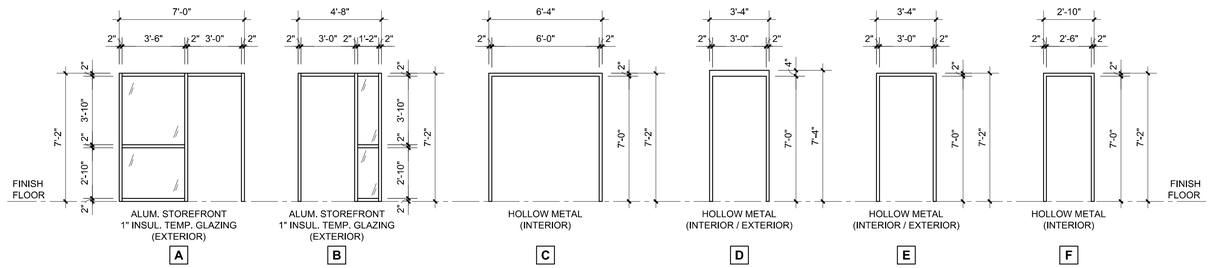

B FRAME ELEVATION
1/4" = 1'-0"

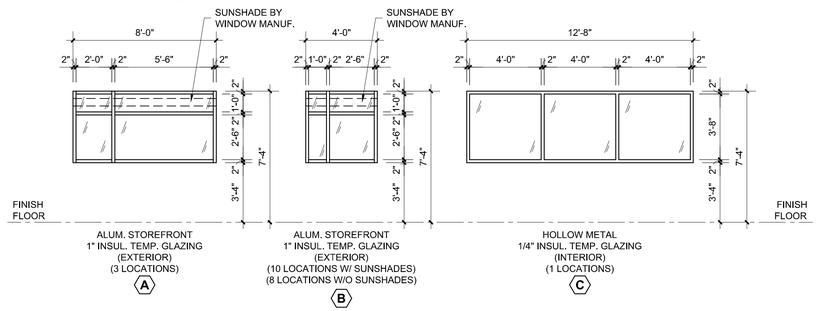

C WINDOW ELEVATION
1/4" = 1'-0"

REDLAND CHILDERS ARCHITECTS
413 W. 12th
Ada, OK 74820
p. 580-436-0770
f. 580-436.6320
www.rcada.com

WALL ENGINEERING
PO BOX 1457, DURANT, OK 74702
OKLAHOMA CA #5413 EXP. JUNE 30, 2023

SUBMITTAL / REVISIONS:
DATE | BY | SUBMITTAL / REVISION

CITY OF SHAWNEE
WASTEWATER TREATMENT PLANT IMPROVEMENTS
SHAWNEE, OKLAHOMA

DOOR ELEVATION

PROJECT NO.
#SH-20-21
DATE
March 11, 2022
DRAWN BY:
CHECKED BY:
REVIEWED BY:
SCALE:

BAR IS ONE HALF INCH ON ORIGINAL DRAWING
0" 1/2"
IF NOT ONE HALF INCH ON THIS SHEET, ADJUST SCALES ACCORDINGLY

SHEET
A402

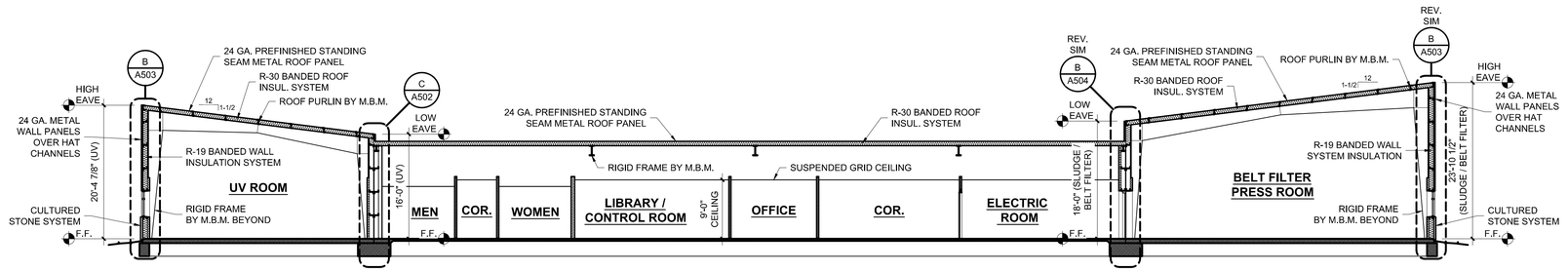

A BUILDING SECTION
3/32" = 1'-0"

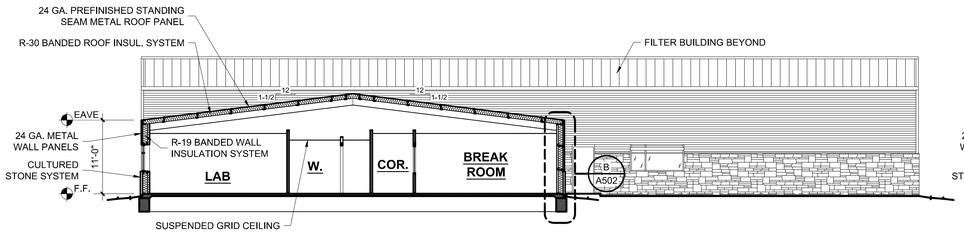

B BUILDING SECTION
3/32" = 1'-0"

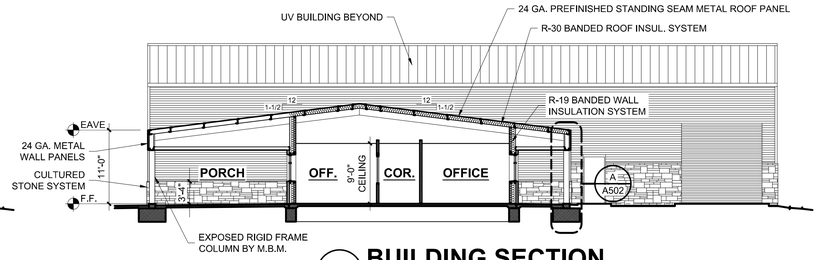

C BUILDING SECTION
3/32" = 1'-0"

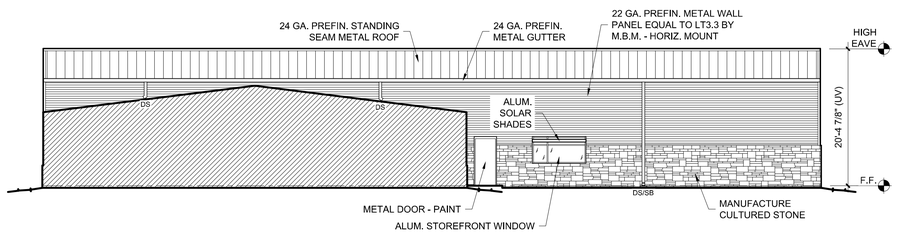

D EAST ELEVATION
3/32" = 1'-0"

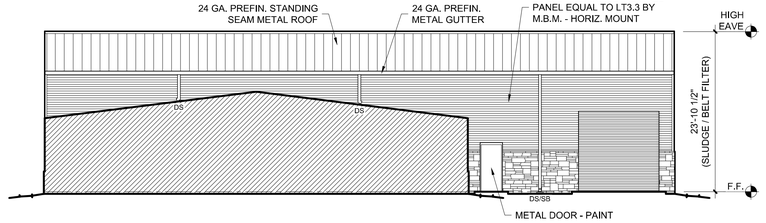

E WEST ELEVATION
3/32" = 1'-0"

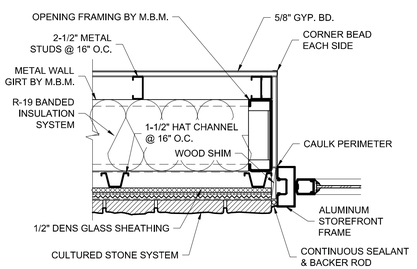

F EXTERIOR DOOR JAMB
1 1/2" = 1'-0"

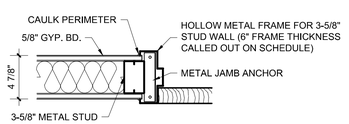

G H.M. JAMB 3-5/8" STUD
1 1/2" = 1'-0"

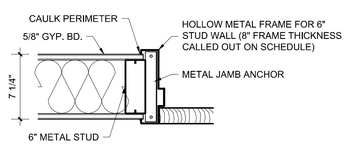

H H.M. JAMB 6" STUD
1 1/2" = 1'-0"

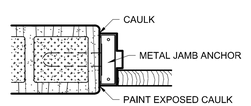

J H.M. WINDOW JAMB
1 1/2" = 1'-0"

WALL ENGINEERING
PO BOX 1457, DURANT, OK 74702
OKLAHOMA CA #5413 EXP. JUNE 30, 2023

SUBMITTAL / REVISIONS:

DATE	BY	SUBMITTAL / REVISION

CITY OF SHAWNEE
WASTEWATER TREATMENT PLANT IMPROVEMENTS
SHAWNEE, OKLAHOMA

BUILDING SECTION

PROJECT NO.
#SH-20-21
DATE
March 11, 2022
DRAWN BY:
CHECKED BY:
REVIEWED BY:
SCALE:

BAR IS ONE HALF INCH ON ORIGINAL DRAWING
0" 1/2"
IF NOT ONE HALF INCH ON THIS SHEET, ADJUST SCALES ACCORDINGLY

STATE OF OKLAHOMA
KYLE E. REDLAND
4970
3/11/22
REGISTERED
LICENSED ARCHITECT

REDLAND CHILDERS ARCHITECTS
413 W. 12th
Ada, OK 74820
p. 580-436-0770
f. 580-436-6320
www.rcada.com

SHEET
A501

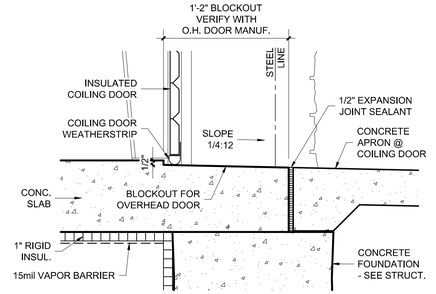

D SECTION @ COILING DOOR

1-1/2" = 1'-0"

METAL BUILDING MATERIAL FINISH NOTE:
ALL METAL BUILDING MATERIALS SHALL BE GALVANIZED TO RESIST A CORROSIVE ENVIRONMENT

-MAIN FRAMES SHALL BE HOT DIPPED GALVANIZED

-ALL REMAINING COMPONENTS (SECONDARY FRAMING, FASTENERS, TRIM) SHALL BE GALVANIZED

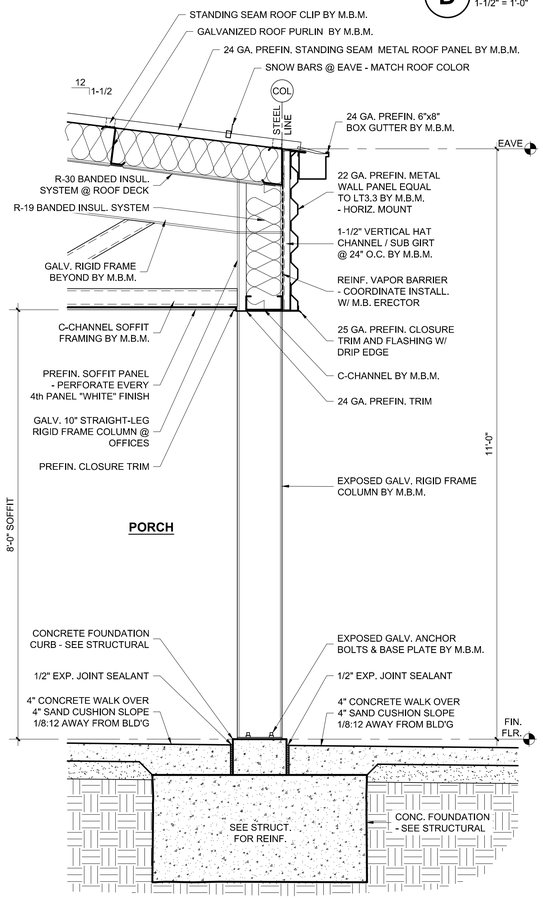

A WALL SECTION @ PORCH

3/4" = 1'-0"

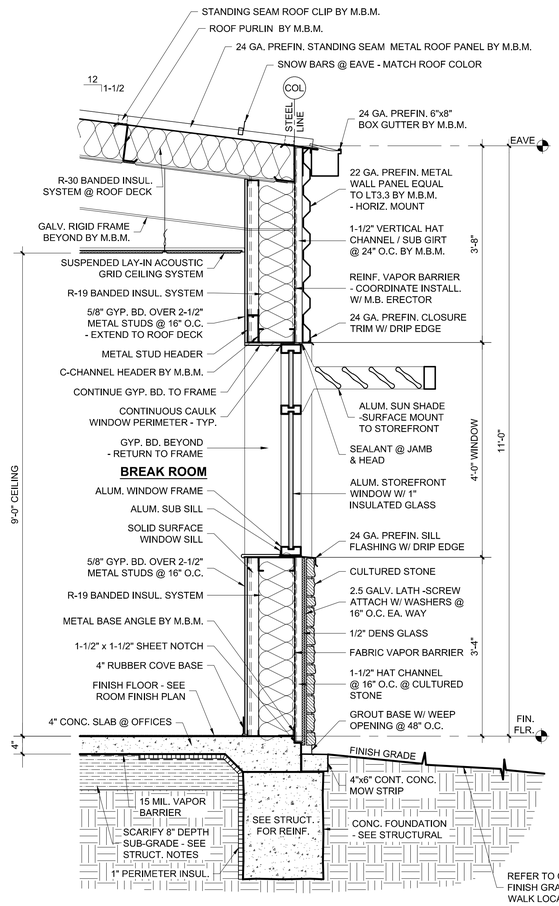

B WALL SECTION @ BREAK ROOM

3/4" = 1'-0"

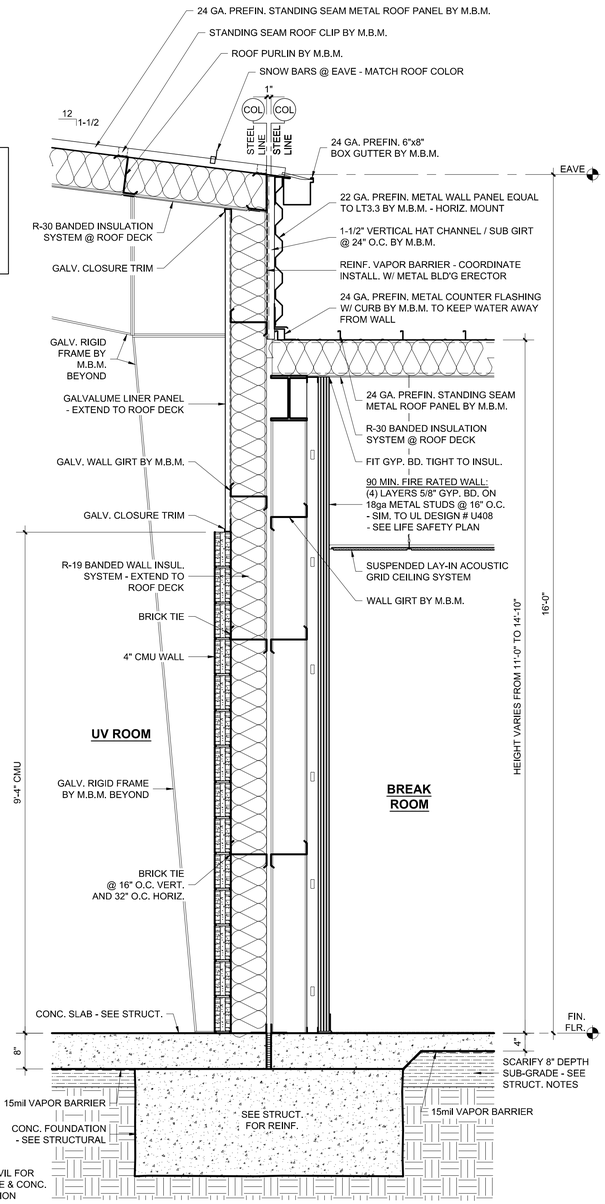

C WALL SECTION @ B.R. / UV ROOM

3/4" = 1'-0"

WALL FIRE RATING:
FIRE RATED WALL BASED ON UL DESIGN # U408 NONBEARING WALL RATING 2-HOUR FIRE RESISTANCE RATINGS - ANSI/UL 263

WALL ENGINEERING
PO BOX 1457, DURANT, OK 74702
OKLAHOMA CA #5413 EXP. JUNE 30, 2023

SUBMITTAL / REVISIONS:

DATE	BY	SUBMITTAL / REVISION

CITY OF SHAWNEE
WASTEWATER TREATMENT PLANT IMPROVEMENTS
SHAWNEE, OKLAHOMA

WALL SECTION

PROJECT NO.	#SH-20-21
DATE	March 11, 2022
DRAWN BY:	
CHECKED BY:	
REVIEWED BY:	
SCALE:	

BAR IS ONE HALF INCH ON ORIGINAL DRAWING
0" 1/2"
IF NOT ONE HALF INCH ON THIS SHEET, ADJUST SCALES ACCORDINGLY



REDLAND CHILDERS ARCHITECTS
413 W. 12th
Ada, OK 74820
p. 580-436-0770
f. 580-436.6320
www.rcada.com

SHEET

A502

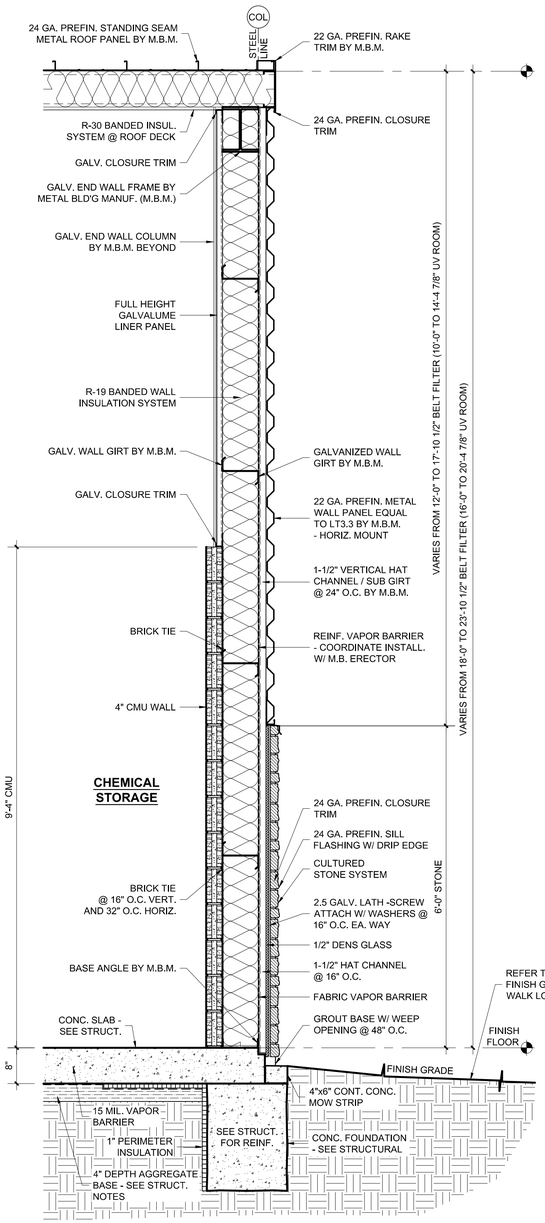

WALL SECTION @ UV ROOM / CHEMICAL ROOM

A 3/4" = 1'-0"

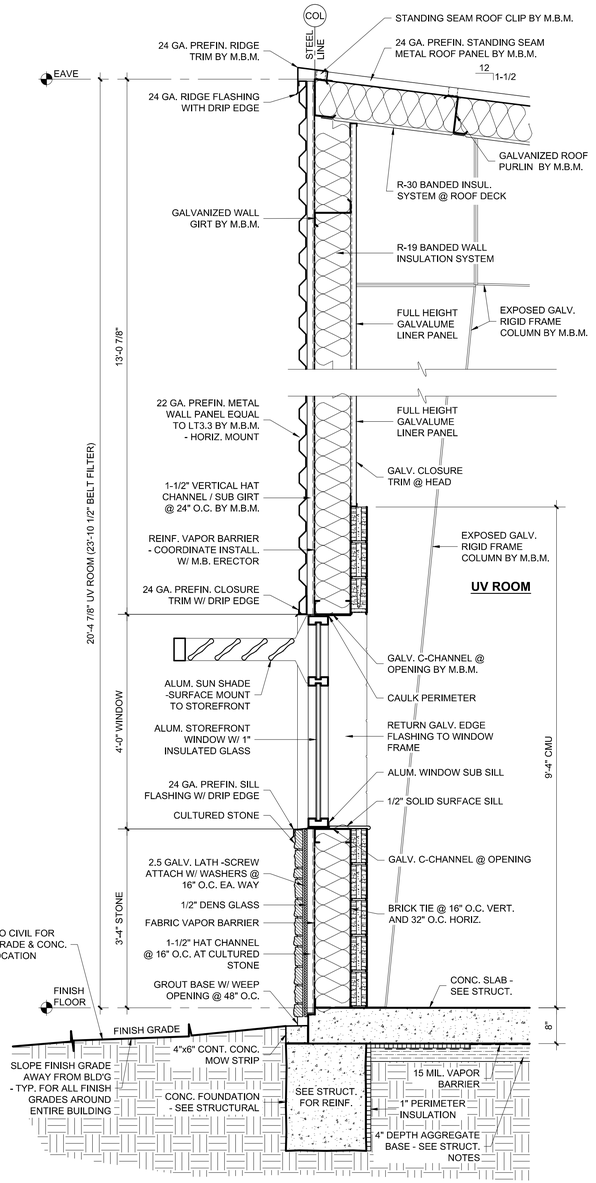

WALL SECTION @ UV ROOM (LOW WALL)

B 3/4" = 1'-0"

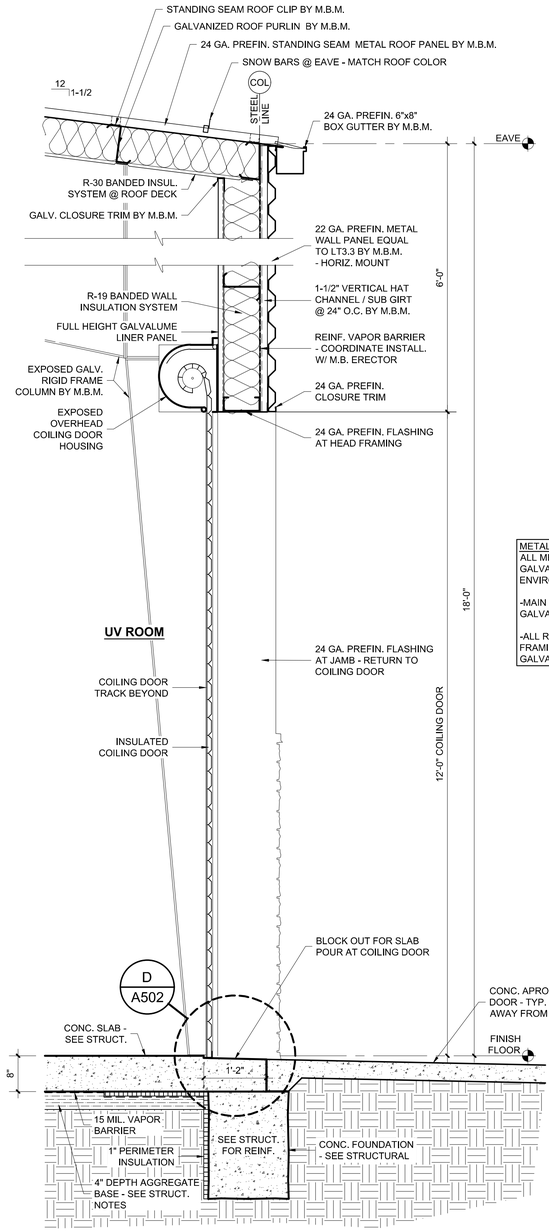

WALL SECTION @ SLUDGE (HIGH WALL)

C 3/4" = 1'-0"

METAL BUILDING MATERIAL FINISH NOTE:
ALL METAL BUILDING MATERIALS SHALL BE GALVANIZED TO RESIST A CORROSIVE ENVIRONMENT

-MAIN FRAMES SHALL BE HOT DIPPED GALVANIZED

-ALL REMAINING COMPONENTS (SECONDARY FRAMING, FASTENERS, TRIM) SHALL BE GALVANIZED

WALL ENGINEERING
PO BOX 1457, DURANT, OK 74702
OKLAHOMA CA #5413 EXP. JUNE 30, 2023

SUBMITTAL / REVISIONS:

DATE	BY	SUBMITTAL / REVISION

CITY OF SHAWNEE
WASTEWATER TREATMENT PLANT IMPROVEMENTS
SHAWNEE, OKLAHOMA

WALL SECTION

PROJECT NO. #SH-20-21
DATE March 11, 2022
DRAWN BY:
CHECKED BY:
REVIEWED BY:
SCALE:

BAR IS ONE HALF INCH ON ORIGINAL DRAWING
0" 1/2"
IF NOT ONE HALF INCH ON THIS SHEET, ADJUST SCALES ACCORDINGLY

STATE OF OKLAHOMA · REGISTERED · 4970 · 3/11/22 · LICENSED ARCHITECT

REDLAND CHILDERS ARCHITECTS
413 W. 12th
Ada, OK 74820
p. 580-436-0770
f. 580-436-6320
www.rcada.com

SHEET

A503

METAL BUILDING MATERIAL FINISH NOTE:
ALL METAL BUILDING MATERIALS SHALL BE GALVANIZED TO RESIST A CORROSIVE ENVIRONMENT

-MAIN FRAMES SHALL BE HOT DIPPED GALVANIZED

-ALL REMAINING COMPONENTS (SECONDARY FRAMING, FASTENERS, TRIM) SHALL BE GALVANIZED

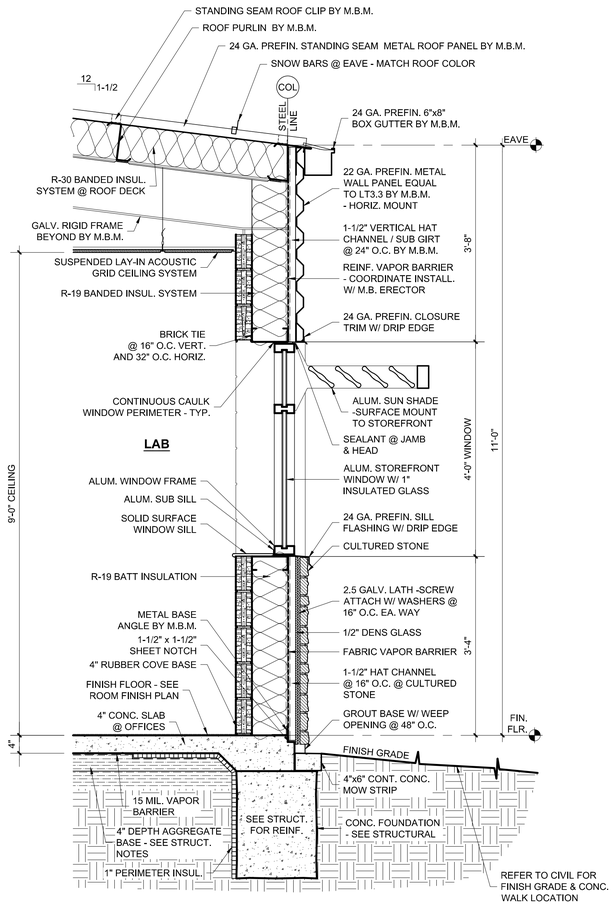

A WALL SECTION @ LAB
3/4" = 1'-0"

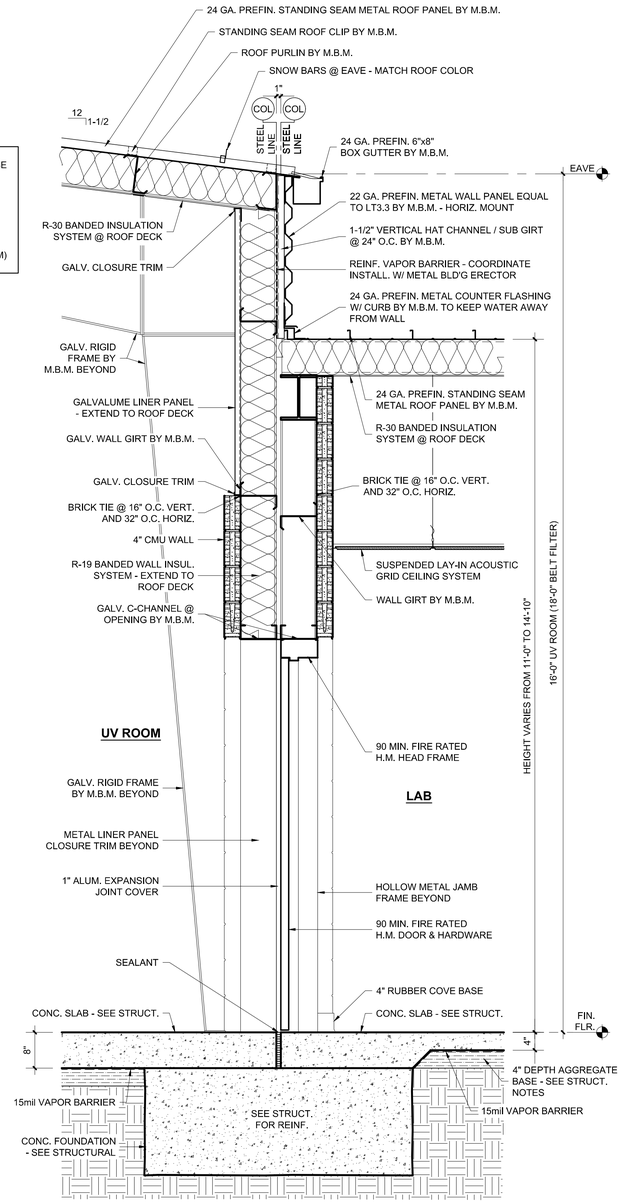

B WALL SECTION @ LAB / UV ROOM / BFP ROOM
3/4" = 1'-0"

WALL FIRE RATING:
FIRE RATED WALL BASED ON UL DESIGN # U408 NONBEARING
WALL RATING 2-HOUR FIRE RESISTANCE RATINGS - ANSI/UL 263

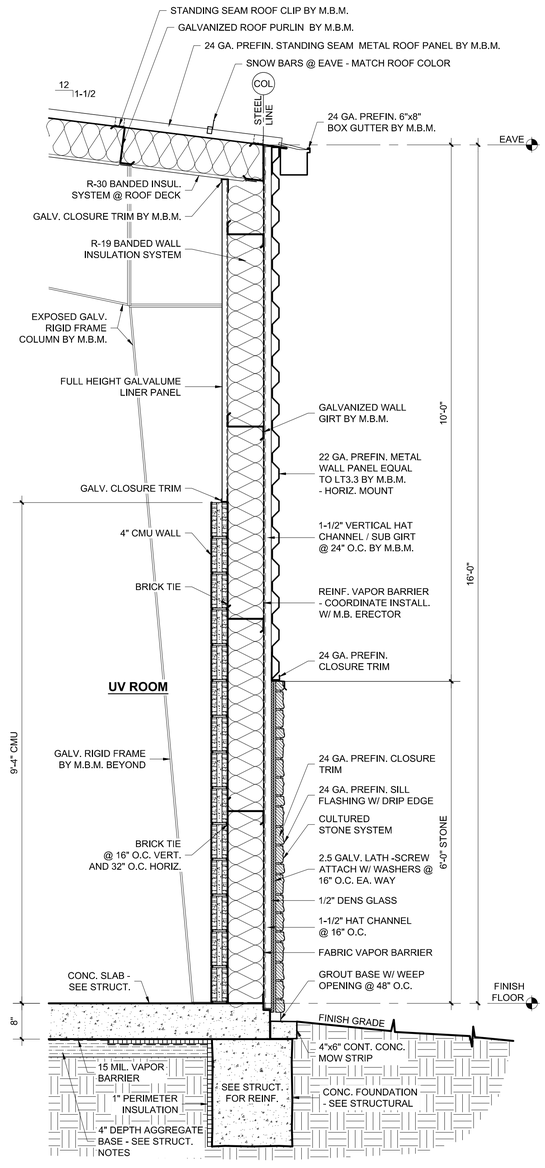

C WALL SECTION @ UV ROOM (HIGH WALL)
3/4" = 1'-0"

WALL ENGINEERING
PO BOX 1457, DURANT, OK 74702
OKLAHOMA CA #5413 EXP. JUNE 30, 2023

SUBMITTAL / REVISIONS:

DATE	BY	SUBMITTAL / REVISION

CITY OF SHAWNEE
WASTEWATER TREATMENT PLANT IMPROVEMENTS
SHAWNEE, OKLAHOMA

WALL SECTION

PROJECT NO.
#SH-20-21

DATE
March 11, 2022

DRAWN BY:

CHECKED BY:

REVIEWED BY:

SCALE:

BAR IS ONE HALF INCH ON ORIGINAL DRAWING
0" 1/2"
IF NOT ONE HALF INCH ON THIS SHEET, ADJUST SCALES ACCORDINGLY

STATE OF OKLAHOMA
CHRISTOPHER A. WALL
19770
3/11/22
LICENSED ARCHITECT

REDLAND CHILDERS ARCHITECTS
413 W. 12th
Ada, OK 74820
p. 580-436-0770
f. 580-436.6320
www.rcada.com

SHEET

A504

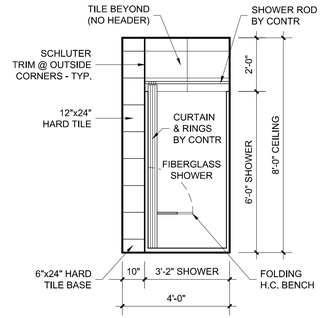

A **MEN #121**
3/8" = 1'-0"

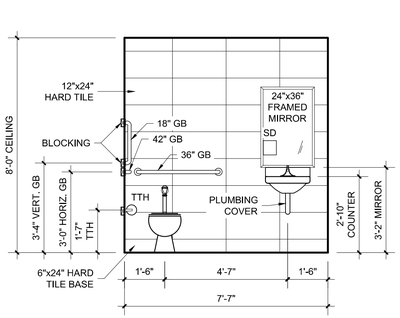

B **MEN #121**
3/8" = 1'-0"

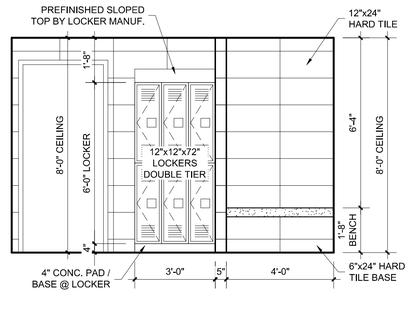

C **MEN #121**
3/8" = 1'-0"

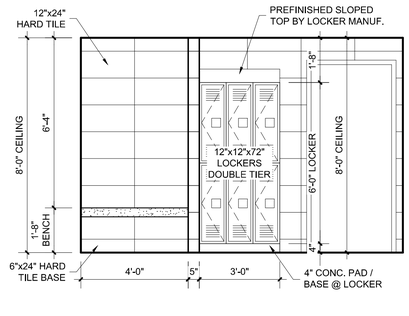

D **WOMEN #122**
3/8" = 1'-0"

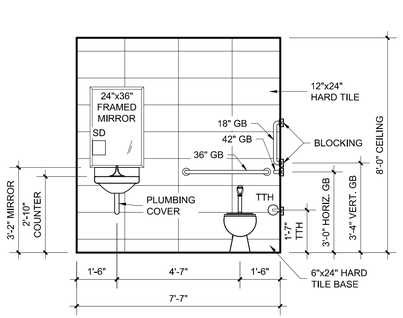

E **WOMEN #122**
3/8" = 1'-0"

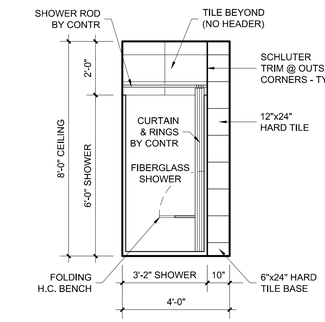

F **WOMEN #122**
3/8" = 1'-0"

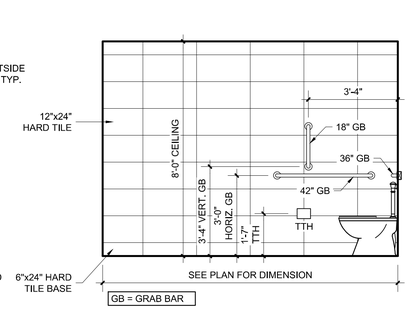

G **TYPICAL RESTROOM ELEV.**
3/8" = 1'-0"

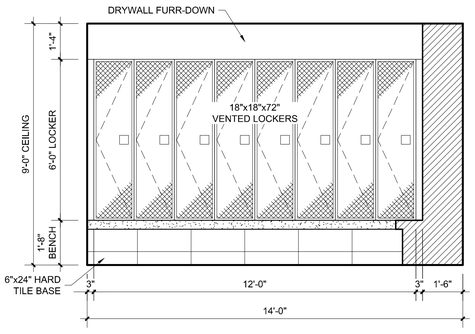

H **MUD ROOM #124**
3/8" = 1'-0"

(12) TOTAL LOCKERS

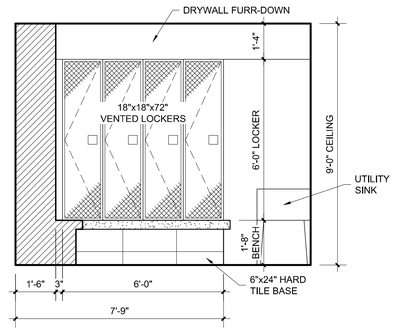

J **MUD ROOM #124**
3/8" = 1'-0"

TOILET ACCESSORY LEGEND	
M	FRAMED MIRROR
GB	GRAB BAR(S)
PTD	PAPER TOWEL DISPENSER
SD	SOAP DISPENSER - WALL MOUNT
TTH	TOILET TISSUE HOLDER

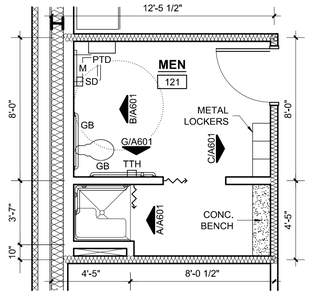

K **MEN #121**
1/4" = 1'-0"
NORTH

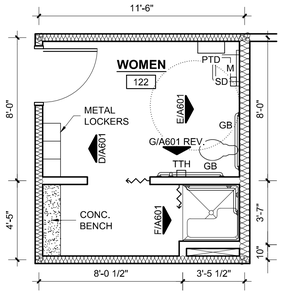

L **WOMEN #122**
1/4" = 1'-0"
NORTH

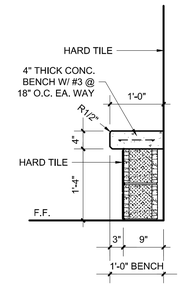

M **BENCH SECTION**
3/4" = 1'-0"

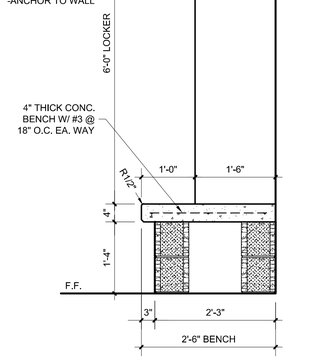

N **LOCKER SECTION**
3/4" = 1'-0"

REDLAND CHILDERS ARCHITECTS
413 W. 12th
Ada, OK 74820
p. 580-436-0770
f. 580-436-6320
www.rcada.com

WALL ENGINEERING
PO BOX 1457, DURANT, OK 74702
OKLAHOMA CA #5413 EXP. JUNE 30, 2023

SUBMITTAL / REVISIONS:
DATE | BY | SUBMITTAL / REVISION

CITY OF SHAWNEE
WASTEWATER TREATMENT PLANT IMPROVEMENTS
SHAWNEE, OKLAHOMA

INTERIOR ELEVATION

PROJECT NO.
#SH-20-21
DATE
March 11, 2022
DRAWN BY:
CHECKED BY:
REVIEWED BY:
SCALE:

BAR IS ONE HALF INCH ON ORIGINAL DRAWING
0" 1/2"
IF NOT ONE HALF INCH ON THIS SHEET, ADJUST SCALES ACCORDINGLY

SHEET
A601

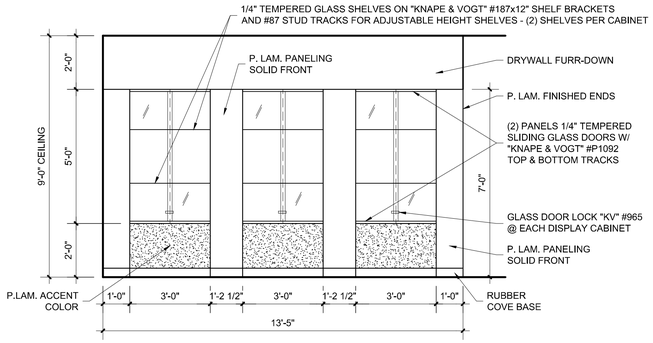

A DISPLAY CASE (LOBBY #101)

3/8" = 1'-0"

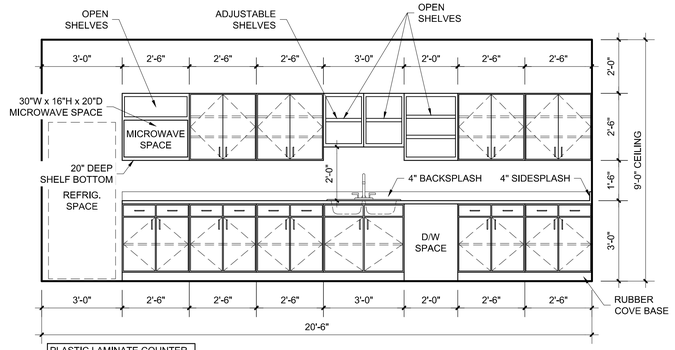

B BREAK ROOM #123

3/8" = 1'-0"

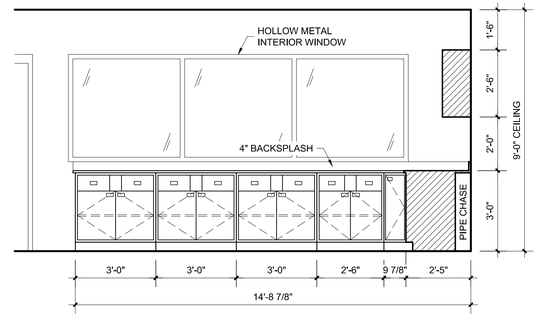

C LAB #118

3/8" = 1'-0"

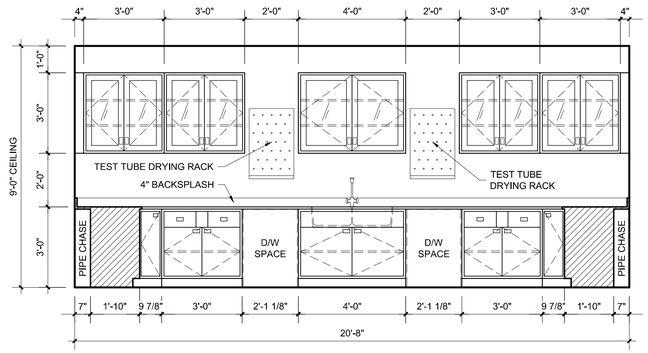

D LAB #118

3/8" = 1'-0"

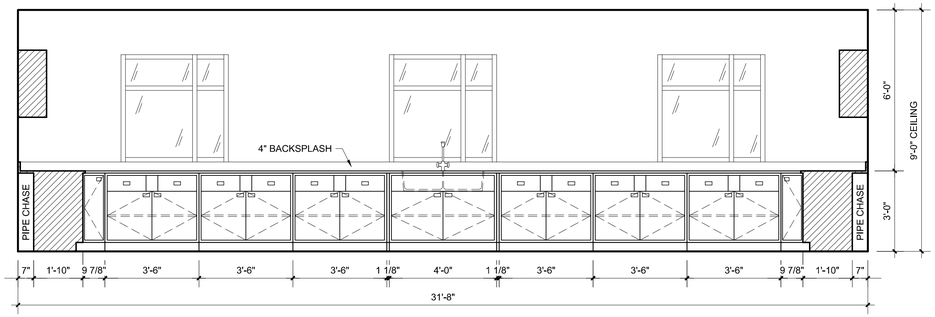

E LAB #118

3/8" = 1'-0"

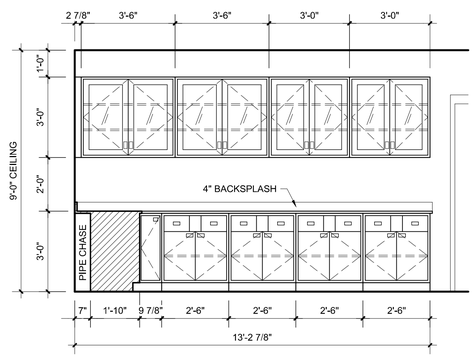

F LAB #118

3/8" = 1'-0"

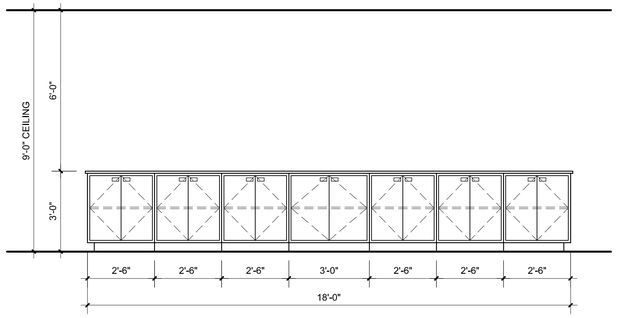

G LAB #118

3/8" = 1'-0"

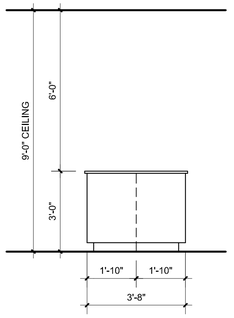

H LAB #118

3/8" = 1'-0"

WALL ENGINEERING
PO BOX 1457, DURANT, OK 74702
OKLAHOMA CA #5413 EXP. JUNE 30, 2023

SUBMITTAL / REVISIONS:

DATE	BY	SUBMITTAL / REVISION

CITY OF SHAWNEE
WASTEWATER TREATMENT PLANT IMPROVEMENTS
SHAWNEE, OKLAHOMA

MILLWORK ELEVATION

PROJECT NO.
#SH-20-21
DATE
March 11, 2022
DRAWN BY:
CHECKED BY:
REVIEWED BY:
SCALE:

BAR IS ONE HALF INCH ON ORIGINAL DRAWING
0" 1/2"
IF NOT ONE HALF INCH ON THIS SHEET, ADJUST SCALES ACCORDINGLY

STATE OF OKLAHOMA
KENNETH L. REDLAND
#970
5/11/22
LICENSED ARCHITECT

REDLAND CHILDERS ARCHITECTS
413 W. 12th
Ada, OK 74820
p. 580-436-0770
f. 580-436-6320
www.rcada.com

SHEET

A602

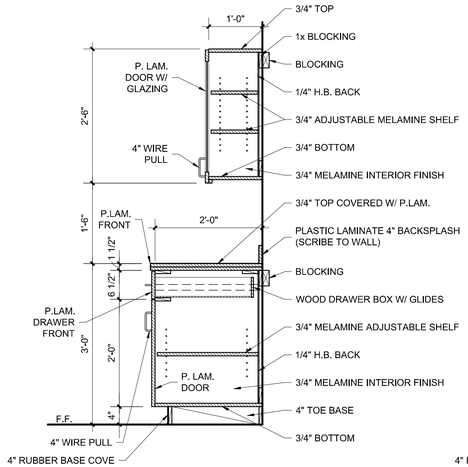

A **CABINET SECTION**
3/4" = 1'-0"

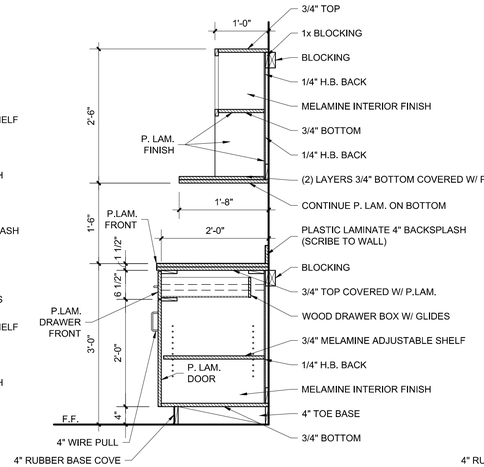

B **CABINET SECTION**
3/4" = 1'-0"

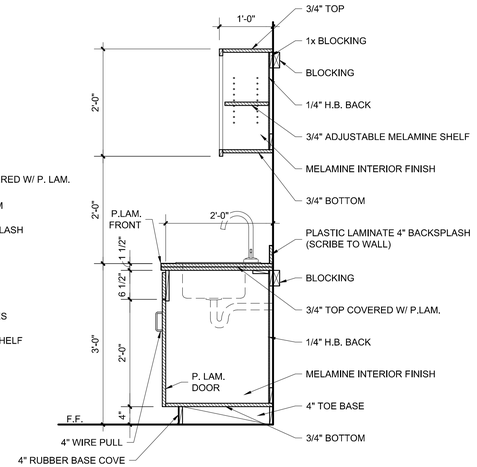

C **SINK CABINET SECTION**
3/4" = 1'-0"

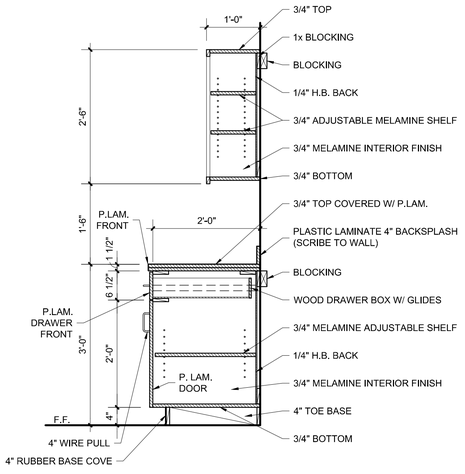

D **CABINET SECTION**
3/4" = 1'-0"

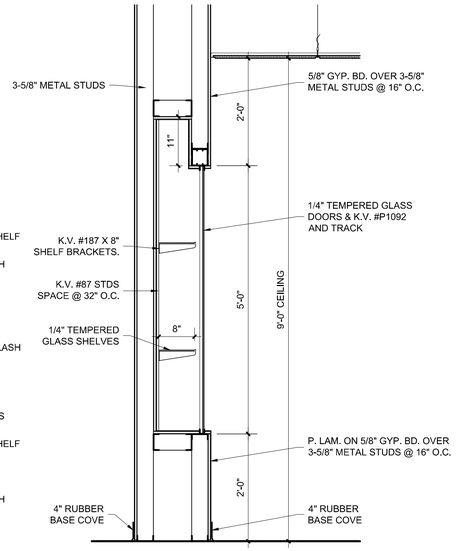

E **DISPLAY CASE SECTION**
3/4" = 1'-0"

WALL ENGINEERING
PO BOX 1457, DURANT, OK 74702
OKLAHOMA CA #5413 EXP. JUNE 30, 2023

SUBMITTAL / REVISIONS:

DATE	BY	SUBMITTAL / REVISION

CITY OF SHAWNEE
WASTEWATER TREATMENT PLANT IMPROVEMENTS
SHAWNEE, OKLAHOMA

MILLWORK SECTION

PROJECT NO.
#SH-20-21
DATE
March 11, 2022
DRAWN BY:
CHECKED BY:
REVIEWED BY:
SCALE:

BAR IS ONE HALF INCH ON ORIGINAL DRAWING
0" 1/2"
IF NOT ONE HALF INCH ON THIS SHEET, ADJUST SCALES ACCORDINGLY

STATE OF OKLAHOMA
BRENTON K. REDLAND
#970
5/11/22
LICENSED ARCHITECT

REDLAND CHILDERS ARCHITECTS
413 W. 12th
Ada, OK 74820
p. 580-436-0770
f. 580-436-6320
www.rcada.com

SHEET
A603

ROOM FINISH SCHEDULE

RM. #	ROOM NAME	FLOOR	BASE	WALL	CLG.	MLWK.	RMRK.
101	ENTRY	F1	B1	W2	C2	M1	-
102	CORRIDOR	F1	B1	W2	C2	-	-
103	OFFICE	F2	B1	W1	C2	-	-
104	ELECTRIC ROOM	F4	B1	W2	C2	-	-
105	STORAGE	F4	B1	W2	C2	-	-
106	BELT FILTER PRESS ROOM	F4	B1	W2/W4	C1	-	-
107	CHEMICAL ROOM	F4	B1	W2/W4	C1	-	-
108	SLUDGE LOADING	F6	B1	W2/W4	C1	-	-
109	OFFICE	F2	B1	W1	C2	-	-
110	CLOSET	F1	B1	W1	C2	-	-
111	CLOSET	F1	B1	W1	C2	-	-
112	CORRIDOR	F1	B1	W2	C2	-	-
113	OFFICE	F2	B1	W1	C2	-	-
114	LIBRARY / CONTROL ROOM	F1	B1	W2	C2	-	-
115	OFFICE	F2	B1	W1	C2	-	-
116	CONFERENCE	F2	B1	W1	C2	-	-
117	CORRIDOR	F1	B1	W2	C2	-	-
118	LAB	F5	B1	W2	C2	M1	-
119	STORAGE	F5	B1	W1	C2	-	-
120	CORRIDOR	F1	B1	W1	C2	-	-
121	MEN	F1	B2	W3	C2	-	-
122	WOMEN	F1	B2	W3	C2	-	-
123	BREAK ROOM	F1	B1	W2	C2	M1	-
124	MUD ROOM	F1	B2	W3	C2	-	-
125	UV ROOM	F4	B1	W2/W4	C1	-	-

MATERIAL FINISH LEGEND

FLOORING "F":

F1	HEAVY COMMERCIAL LUXURY VINYL TILE MANUF.: SHAW CONTRACT COLLECTION: TERRAIN II STYLE: TERRAIN II 30 mil COLOR: SUBMIT FOR SELECTION SIZE: 6"x48" INSTALL: DIRECT GLUE
F2	COMMERCIAL CARPET TILE MANUF.: SHAW CONTRACT COLLECTION: NO RULES - PLACES STYLE: SKY COLOR: SUBMIT FOR SELECTION SIZE: 24"x24" TILE INSTALL: BRICK
F3	PORCELAIN TILE VIRGINIA TILE / DOMESTIC COLLECTION COLOR: SUBMIT "GREY TO BLACK" AND "WHITE TO TAUPE" COLOR SERIES SIZE: 12"x24" TILE GROUT: SUBMIT FOR SELECTION (SUBMIT TILE AND GROUT SAMPLES FOR FINAL SELECTION)
F4	FLOOR COATING SYSTEM TNEMEC / 3 COAT SYSTEM / MECHANICALLY ABRADE 1st COAT: SERIES 201 EPOXOPRIME / 190 SQ. FT. / GAL. (8.0 DRY MILS) 2nd COAT: SERIES 280 TNEME GLAZE / 200 SQ. FT. / GAL. (8.0 DRY MILS) 3rd COAT: SERIES 291 CRU / 537 SQ. FT. / GAL. (2.0 DRY MILS) COLOR: SUBMIT FOR SELECTION
F5	SLIP RESISTANT TILE ARMSTRONG SAFETY ZONE TILE SIZE: 12"x12" COLOR: SUBMIT FOR SELECTION
F6	SEALED CONCRETE

MATERIAL FINISH LEGEND

BASE "B":

B1	RUBBER BASE ARMSTRONG / 4" RUBBER COVE BASE (SUBMIT COLORS FOR SELECTION)
B2	TILE GROUT AT BASE OF WALL TILE (RESTROOMS) INSTALL WITH BEVELED CORNER GROUT AT WALL & FLOOR (NO COVE BASE)

WALLS "W":

W1	LATEX PAINT SHERWIN WILLIAMS FIELD COLOR: SUBMIT SAMPLES FOR SELECTION
W2	EPOXY PAINT SHERWIN WILLIAMS FIELD COLOR: SUBMIT SAMPLES FOR SELECTION
W3	PORCELAIN TILE VIRGINIA TILE / DOMESTIC COLLECTION COLOR: SUBMIT "GREY TO BLACK" AND "WHITE TO TAUPE" COLOR SERIES SIZE: 12"x24" TILE GROUT: SUBMIT FOR SELECTION (SUBMIT TILE AND GROUT SAMPLES FOR FINAL SELECTION)
W4	METAL LINER PANEL (ABOVE) GALVANIZED METAL LINER PANEL

CEILING "C":

C1	EXPOSED TO ROOF STRUCTURE COLOR "WHITE"
C2	SUSPENDED ACOUSTIC GRID CEILING ARMSTRONG / 24"x24" GRID SEE REFLECTED CEILING PLAN FOR TYPE LOCATION SEE SPECIFICATIONS FOR TYPE DESCRIPTION

MILLWORK "M":

M1	PLASTIC LAMINATE CABINET & COUNTER TOP WILSON ART CHEMICAL RESISTANT COUNTER @ LAB "BLACK" CABINET COLOR: SUBMIT MANUF. STANDARD COLORS FOR SELECTION COUNTER TOP COLORS: SUBMIT MANUF. STANDARD COLORS FOR SELECTION

GENERAL NOTES:

SEE MILLWORK ELEVATIONS FOR CABINET AND COUNTERTOP FINISHES.

SEE DOOR AND FRAME ELEVATIONS FOR RELATED FINISHES.

INSTALL SCHLUTER TRIM AT ALL THRESHOLDS WHERE FLOORING MATERIAL CHANGES. INSTALL SCHLUTER "SCHIENE" WHERE MATERIALS ARE OF SIMILAR HEIGHTS AND "RENO-U" WHERE MATERIALS ARE OF DIFFERENT HEIGHTS.

INSTALL SCHULTER TRIM AT ALL OUTSIDE CORNER HARD TILE WALLS. INSTALL SCHLUTER "RONDEC" FINISHING EDGE PROTECTION WITH MATCHING ACCESSORIES FOR A FINISHED AND DURABLE FINISH.



A FINISH PLAN
3/32" = 1'-0"

NORTH

FINISH PLAN LEGEND

	METAL STUD DRYWALL (PAINT)
	4" OR 8" CMU (PAINT)
	HARD TILE (FULL HEIGHT)



REDLAND CHILDERS ARCHITECTS
413 W. 12th
Ada, OK 74820
p. 580-436-0770
f. 580-436-6320
www.rcada.com

WALL ENGINEERING
PO BOX 1457, DURANT, OK 74702
OKLAHOMA CA #5413 EXP. JUNE 30, 2023

SUBMITTAL / REVISIONS:
DATE | BY | SUBMITTAL / REVISION

CITY OF SHAWNEE
WASTEWATER TREATMENT PLANT IMPROVEMENTS
SHAWNEE, OKLAHOMA

ROOM FINISH

PROJECT NO.
#SH-20-21

DATE
March 11, 2022

DRAWN BY:

CHECKED BY:

REVIEWED BY:

SCALE:

BAR IS ONE HALF INCH ON ORIGINAL DRAWING
0" 1/2"
IF NOT ONE HALF INCH ON THIS SHEET, ADJUST SCALES ACCORDINGLY

SHEET

A701

GENERAL NOTES

FOUNDATION & EXCAVATION NOTES:

1. FOUNDATIONS HAVE BEEN DESIGNED IN ACCORDANCE WITH THE GEOTECHNICAL REPORT PREPARED FOR THIS PROJECT BY HINDERLITER GEOTECHNICAL ENGINEERING (PROJECT NO. WE-20-03), DATED JUNE 17, 2020.

2. ALL VEGETATION, TOP SOIL, PAVING, AND ANY LOOSE MATERIAL BENEATH THE PROPOSED BUILDING SITE SHALL BE STRIPPED AND REMOVED. EXPOSED SUBGRADE SHALL BE PROOF-ROLLED AND SOILS WHICH ARE OBSERVED TO RUT AND DEFLECT EXCESSIVELY SHALL BE UNDERCUT AND REMOVED ALSO.

3. AFTER ALL STRIPPING AND CUTTING OPERATIONS WITHIN THE BUILDING AREA ARE COMPLETE THE SUBGRADE SHALL THEN BE SCARIFIED TO A MINIMUM DEPTH OF 8 INCHES AND COMPACTED TO AT LEAST 95 PERCENT OF ITS STANDARD PROCTOR DENSITY WITHIN THE RANGE OF -2 PERCENT TO +2 PERCENT OF THE OPTIMUM MOISTURE CONTENT. THE GRADE SHALL THEN BE RAISED TO 8 INCHES BELOW FINISHED FLOOR ELEVATION WITH LOW VOLUME CHANGE MATERIAL. FILL MATERIAL SHALL BE PLACED IN LIFTS OF 9" OR LESS AND SHALL BE COMPACTED AS STATED ABOVE.

4. LOW VOLUME CHANGE MATERIAL SHALL MEET THE FOLLOWING REQUIREMENTS:

AMOUNT FINER THAN 3" SIEVE	= 100 PERCENT
LIQUID LIMIT	= 40 MAXIMUM
PLASTICITY INDEX (PI)	= 18 MAXIMUM
	= 5 MINIMUM

5. THE FLOOR SLAB SHOULD BE CONSTRUCTED ON 4 INCHES OF CRUSHED ODOT TYPE A AGGREGATE BASE.

6. SHALLOW SPREAD FOOTINGS AND CONTINUOUS WALL FOOTINGS HAVE BEEN DESIGNED FOR AN ALLOWABLE SOIL BEARING PRESSURES OF 2,000 PSF. FOOTINGS SHALL BEAR A MINIMUM OF 2.5 FEET BELOW FINISHED GRADE.

7. THE CONTRACTOR SHALL NOTIFY THE ARCHITECT OR ENGINEER OF RECORD IMMEDIATELY IN THE EVENT THAT THE SOILS CONDITIONS ENCOUNTERED VARY FROM THOSE SHOWN ON THE BORING LOGS.

REINFORCING STEEL NOTES:

1. ALL REINFORCING STEEL SHALL BE DETAILED, FABRICATED AND PLACED IN ACCORDANCE WITH THE REQUIREMENTS OF ACI 318 (LATEST EDITION), "BUILDING CODE REQUIREMENTS FOR STRUCTURAL CONCRETE" AND ACI 315 (LATEST EDITION), "STANDARD DETAILING MANUAL".

2. REINFORCING STEEL SHALL MEET ASTM A-615, GRADE 60.

3. PROVIDE BENT BARS AT ALL CORNERS. THE MINIMUM LENGTH OF EACH LEG OF THE BENT BAR SHALL BE AS GIVEN BELOW.

#3 BARS	16"	#4 BARS	22"
#5 BARS	27"	#6 BARS	35"
#7 BARS	48"	#8 BARS	63"
#9 BARS	80"	#10 BARS	102"
#11 BARS	113"		

4. UNLESS SHOWN OTHERWISE ON THE PLANS, BARS THAT ARE TOO LONG TO BE PLACED IN ONE PIECE SHALL BE LAP SPLICED A DISTANCE AS GIVEN ABOVE AND SPLICES SHALL BE STAGGERED. FOR HORIZONTAL BARS WITH MORE THAN 12" OF CONCRETE CAST BELOW, USE 1.4 TIMES THE DISTANCES SPECIFIED IN NOTE 3.

5. REINFORCING SHALL NOT BE WELDED IN ANY MANNER UNLESS APPROVED BY THE ENGINEER.

CONCRETE NOTES:

1. ALL CONCRETE SLABS-ON-GRADE SHALL HAVE A MINIMUM 28-DAY COMPRESSIVE STRENGTH OF 3,500 PSI. ALL OTHER CONCRETE SHALL HAVE A MINIMUM 28-DAY COMPRESSIVE STRENGTH OF 3,000 PSI UNLESS NOTED OTHERWISE.

2. CONCRETE WORK SHALL CONFORM TO ALL REQUIREMENTS OF ACI 301 LATEST EDITION,"SPECIFICATIONS FOR STRUCTURAL CONCRETE FOR BUILDINGS", AND ACI 318 LATEST EDITION, "BUILDING CODE REQUIREMENTS FOR STRUCTURAL CONCRETE".

3. ALL EXPOSED EDGES OF CONCRETE SHALL BE CHAMFERED 3/4", UNLESS NOTED OTHERWISE.

4. CLEAR DISTANCES FROM CAST-IN-PLACE CONCRETE SURFACES TO REINFORCING SHALL BE NO LESS THAN THE FOLLOWING UNLESS NOTED OTHERWISE:
   - SIDES OF FOOTINGS. . . . . 3"
   - BOTTOM OF FOOTINGS . . . . . 3"
   - SLABS-ON-GRADE. . . . . 2" FROM TOP
   - SUPPORTED SLABS . . . . . 1"

5. PROVIDE ALL ACCESSORIES NECESSARY TO SUPPORT REINFORCEMENT AT POSITIONS SHOWN ON THE PLANS AND DETAILS. PLASTIC COATED ACCESSORIES SHALL BE USED IN ALL EXPOSED CONCRETE WORK.

6. THE GENERAL CONTRACTOR SHALL CHECK WITH CIVIL, ARCHITECTURAL, MECHANICAL AND ELECTRICAL DRAWINGS AND THE SUB-CONTRACTORS FOR OPENINGS, SLEEVES, ANCHORS, HANGERS, INSERTS, SLAB DEPRESSIONS AND OTHER ITEMS RELATED TO THE CONCRETE WORK AND SHALL ASSUME RESPONSIBILITY FOR THEIR PROPER LOCATION.

METAL BUILDING SYSTEMS NOTES:

1. ALL COLUMNS, BEAMS, PURLINS, GIRTS, METAL SIDING, ROOFING, WIND BRACING AND OTHER STRUCTURAL APPURTENANCES NECESSARY TO COMPLETE THE SHELL OF THE BUILDING SHALL BE DESIGNED AND FABRICATED BY AN MBMA PRE-ENGINEERED METAL BUILDING MANUFACTURER, AND ERECTED BY AN EXPERIENCED METAL BUILDING ERECTOR.

2. ALL STRUCTURAL COMPONENTS AND THEIR CONNECTIONS, INCLUDING FOUNDATION ANCHOR BOLTS, SHALL BE DESIGNED FOR THE METAL BUILDING MANUFACTURER BY A PROFESSIONAL ENGINEER, REGISTERED IN THE STATE OF OKLAHOMA, WHO SHALL AFFIX HIS SEAL TO THE ERECTION DRAWINGS.

3. ALL STRUCTURAL MILL SECTIONS OR WELDED PLATE SECTIONS SHALL BE DESIGNED IN ACCORDANCE WITH THE LATEST EDITION OF AISC "SPECIFICATIONS FOR THE DESIGN, FABRICATION, AND ERECTION OF STRUCTURAL STEEL FOR BUILDINGS," AND ALL COLD-FORMED STEEL STRUCTURAL MEMBERS SHALL BE DESIGNED IN ACCORDANCE WITH THE LATEST EDITION OF AISI "SPECIFICATIONS FOR THE DESIGN OF COLD-FORMED STEEL STRUCTURAL MEMBERS".

4. THE FOLLOWING LOADING CRITERIA SHALL BE INCORPORATED IN THE DESIGN:

   A. "RECOMMENDED DESIGN PRACTICES MANUAL" OF THE METAL BUILDING MANUFACTURERS ASSOCIATION (LATEST EDITION).

   B. COMBINATION DESIGN LOADS CONDITIONS SHOULD COMPLY WITH MBMA SPECIFICATIONS.
      - DL
      - DL + LL
      - DL + LL + WL
      - DL + LL + SEISMIC FORCE

   C. ALL ROOF PURLINS SHALL BE DESIGNED TO SUPPORT ALL DEAD LOADS, LIVE LOADS, WIND LOADS, AND A 10 PSF ALLOWANCE FOR SUSPENDED MECHANICAL EQUIPMENT, LIGHT FIXTURES, CEILINGS, ETC.

   D. THE BUILDING FRAME SHALL BE DESIGNED TO LIMIT THE LATERAL DEFLECTION TO H/260 AT THE BUILDING EAVE FOR THE BASIC WIND SPEED STATED IN THE MISCELLANEOUS NOTES.

   E. UNLESS WIND BRACING IS USED TO TAKE LATERAL LOADS, LOAD TESTS ON METAL PANEL WALLS AND ROOF MUST BE SUBMITTED WHERE THESE ARE USED AS A DIAPHRAGM.

   F. LOCATE WIND BRACING ONLY IN LOCATIONS THAT WILL NOT INTERFERE WITH ARCHITECTURAL, MECHANICAL, OR ELECTRICAL ELEMENTS.

   G. ALL METAL BUILDING COMPONENTS SHALL BE GALVANIZED TO RESIST A CORROSIVE ENVIRONMENT

5. RIGID FRAMES

   A. RIGID FRAMES SHALL CONSIST OF WELDED PLATE SECTION COLUMNS AND ROOF BEAMS COMPLETE WITH THE NECESSARY SPLICE PLATES FOR BOLTED FIELD ASSEMBLY.

      1. ALL BASE PLATES, CAP PLATES, COMPRESSION PLATES AND STIFFENER PLATES SHALL BE FACTORY WELDED INTO PLACE AND HAVE THE CONNECTION HOLES SHOP FABRICATED.

      2. ALL SPLICE PLATES SHALL BE SHOP FABRICATED COMPLETE WITH BOLT CONNECTION HOLES.

      3. COLUMNS AND ROOF BEAMS SHALL BE FABRICATED COMPLETE WITH HOLES IN WEBS AND FLANGES FOR THE ATTACHMENT OF SECONDARY STRUCTURAL MEMBERS AND BRACING.

   B. ALL BOLTS FOR FIELD ASSEMBLY OF FRAME MEMBERS SHALL BE HIGH STRENGTH BOLTS UNLESS INDICATED OTHERWISE ON THE ERECTION DRAWINGS.

6. ENDWALL STRUCTURALS

   A. BEAM AND POST ENDWALL. THE ENDWALL STRUCTURALS SHALL BE MEMBERS DESIGNED IN ACCORDANCE WITH THE LATEST EDITION OF AISI "SPECIFICATIONS FOR THE DESIGN OF COLD-FORMED STEEL STRUCTURAL MEMBERS."

   B. ENDWALL FRAMES SHALL CONSIST OF ENDWALL CORNER COLUMNS AS REQUIRED BY DESIGN CRITERIA.

      1. ALL SPLICE PLATES AND BASE CLIPS SHALL BE SHOP FABRICATED COMPLETE WITH BOLT CONNECTION HOLES.

      2. BEAMS AND COLUMNS SHALL BE SHOP FABRICATED COMPLETE WITH HOLES FOR THE ATTACHMENT OF SECONDARY STRUCTURAL MEMBERS.

7. PURLINS AND GIRTS

   A. PURLINS AND GIRTS SHALL BE "Z" SHAPED, PRECISION ROLL FORMED.

   B. EAVE STRUTS SHALL BE "C" SECTIONS.

   C. VERTICAL DEFLECTION SHALL BE LIMITED TO A MAXIMUM 1/240 OF SPAN.

8. WELDING

   A. WELDING PROCEDURE AND OPERATOR QUALIFICATIONS AND WELDING QUALITY STANDARDS SHALL BE IN ACCORDANCE WITH AWS D-1.1 "STRUCTURAL WELDING CODE." INSPECTION SHALL BE AS DEFINED BY AWS PARAGRAPH 8.15.1.

   B. CERTIFICATION OF WELDER'S QUALIFICATIONS SHALL BE SUPPLIED WHEN REQUESTED.

9. STRUCTURAL PAINTING

   A. PRIOR TO PAINTING, THE FABRICATOR SHALL CLEAN THE STEEL OF LOOSE RUST, LOOSE MILL SCALE, DIRT, AND OTHER FOREIGN MATERIAL.

   B. THE FABRICATOR SHALL THEN FACTORY COAT ALL STEEL WITH PRIMER PAINT AS INDICATED IN THE SPECIFICATIONS.

10. METAL BUILDING FABRICATOR SHALL BE A MEMBER OF MBMA.

11. METAL BUILDING SHOP ERECTION DRAWING SHALL BE DETAILED USING GRIDS AS SHOWN ON THE STRUCTURAL DRAWINGS. THE METAL BUILDING DETAILER WILL BE PERMITTED TO CREATE ADDITIONAL GRIDS BUT THOSE GRID SHALL BE REFERENCED BACK TO THE EXISTING GRIDS ON THE STRUCTURAL DRAWINGS. IN NO CASE SHALL THE ERECTION DRAWING CONTAIN GRIDS WHICH HAVE IDENTICAL MARKS TO THE STRUCTURAL DRAWINGS BUT WITH DIFFERENT DIMENSIONS.

MASONRY NOTES:

1. CONCRETE MASONRY WORK SHALL CONFORM TO ALL REQUIREMENTS OF ACI 530/ASCE 5 (LATEST EDITION), "BUILDING CODE REQUIREMENTS FOR MASONRY STRUCTURES" AND ACI 530.1/ASCE 6 (LATEST EDITION), "SPECIFICATIONS FOR MASONRY STRUCTURES".

2. AT ALL CONCRETE BLOCK WALLS PROVIDE TROUGH BLOCK BEAM COURSES AT DOOR HEADS, WINDOW HEADS, AND ABOVE ALL MECHANICAL OPENING OVER 32". PROVIDE KNOCK-OUT BOND BEAM COURSES AT TOP COURSES, BOTTOM COURSES, BELOW WINDOWS, AND AT EVERY 6TH COURSE. BEAM COURSES ABOVE DOORS, WINDOWS, AND MECHANICAL OPENINGS SHALL EXTEND A MINIMUM OF 24" EITHER SIDE OF OPENINGS. BEAM COURSES SHALL BE REINFORCED AS FOLLOWS:
   - 4" BLOCK . . . . . 1-#3

3. VERTICAL CELLS OF CMU WALL SHALL BE REINFORCED WITH 1-#3 BAR AT 48 INCHES ON CENTER.

4. DOWELS SHALL EXTEND FROM THE FOUNDATION INTO THE CONCRETE MASONRY WALLS AT ALL LOCATIONS OF VERTICAL WALL REINFORCEMENT. DOWEL SIZE SHALL BE #3 BARS AND SHALL BE DRILLED AND EPOXIED WITH A MINIMUM EMBEDMENT DEPTH OF 4 INCHES.

5. ALL CONCRETE BLOCK TROUGHS AND CELLS THAT ARE REINFORCED SHALL BE FILLED WITH CONCRETE GROUT (NOT MORTAR) HAVING A COMPRESSIVE STRENGTH OF 3,000 PSI.

6. AT ALL LOCATIONS WHERE MASONRY WALLS INTERSECT, WALLS SHALL BE CONNECTED WITH 50-PERCENT OF UNITS INTERLOCKED AT THE WEB-FLANGE INTERFACE (I.E. RUNNING BOND).

NON-SHELTER CODES, STANDARDS, AND DESIGN CRITERIA:

1. BUILDING CODE: 2015 INTERNATIONAL BUILDING CODE (IBC-2015)

2. ROOF DEAD LOADS:

METAL BUILDING	SELF WEIGHT
COLLATERAL LOAD	10 PSF

3. LIVE LOADS:

ROOF	20 PSF

4. SNOW LOADS:

GOVERNING CODE	ASCE 7-10
GROUND SNOW LOAD, Pg	10 PSF

5. WIND LOADS:

GOVERNING CODE	ASCE 7-10
DESIGN WIND SPEED	120 MPH
WIND EXPOSURE CLASSIFICATION	C
RISK CATEGORY	II
INTERNAL PRESSURE COEFF, GCpi	+/- 0.18

6. SEISMIC LOADS:

GOVERNING CODE	ASCE 7-10
RISK CATEGORY	II
IMPORTANCE FACTOR, Ie	1.0
SOIL SITE CLASSIFICATION	C
MAPPED SPECTRAL ACCELERATION, Ss	0.205
MAPPED SPECTRAL ACCELERATION, S1	0.073
DESIGN SPECTRAL ACCELERATION, Sds	0.164
DESIGN SPECTRAL ACCELERATION, Sd1	0.083
SEISMIC DESIGN CATEGORY	B
RESPONSE MODIFICATION FACTOR, R	3

BASIC SEISMIC FORCE-RESISTING SYSTEM:
STEEL SYSTEM NOT SPECIFICALLY DETAILED FOR SEISMIC RESISTANCE

ANALYSIS PROCEDURE: EQUIVALENT LATERAL FORCE PROCEDURE

MISCELLANEOUS NOTES:

1. ALL DIMENSIONS ON STRUCTURAL DRAWINGS TO BE CHECKED AGAINST CIVIL, ARCHITECTURAL, MECHANICAL, AND ELECTRICAL DRAWINGS BY THE GENERAL CONTRACTOR BEFORE PROCEEDING WITH CONSTRUCTION AND ANY DISCREPANCIES ARE TO BE REPORTED TO THE ARCHITECT IMMEDIATELY.

2. THE CONTRACTOR SHALL ASSUME RESPONSIBILITY, UNRELIEVED BY REVIEW OF SHOP DRAWINGS OR PERIODIC OBSERVATION OF CONSTRUCTION, FOR COMPLIANCE WITH THE CONTRACT DOCUMENTS, FOR FABRICATION PROCESSES AND CONSTRUCTION TECHNIQUES, AND FOR SAFE CONDITIONS ON THE JOB SITE.

3. THE STEEL FABRICATOR SHALL BE RESPONSIBLE FOR FURNISHING ALL MISCELLANEOUS STEEL SHOWN ON THE ARCHITECTURAL DRAWINGS.

4. CONTROL AND CONSTRUCTION JOINTS SHALL BE LOCATED AS DIRECTED ON THE PLANS OR AS DIRECTED BY THE ARCHITECT.

SHOP DRAWING NOTES:

1. REPRODUCTION OF THESE DRAWINGS FOR USE AS SHOP DRAWINGS, FABRICATION DRAWINGS OR ERECTION DRAWINGS IS NOT AUTHORIZED AND, IF SUBMITTED, WILL BE REJECTED WITHOUT BEING CHECKED. A LICENSE TO USE ANY PORTION OR ALL OF THE STRUCTURAL CAD FILES FOR THE LIMITED PURPOSE OF ASSISTING THE CONTRACTOR'S PREPARATION OF SHOP DRAWINGS FOR SUBMITTAL UNDER THE CONSTRUCTION CONTRACT MAY BE PURCHASED FROM THE STRUCTURAL ENGINEER UNDER A STANDARD FORM OF AGREEMENT FOR A FEE OF $150.00. UNDER SUCH AN AGREEMENT, THESE FILES WILL BE PROVIDED IN AUTOCAD VERSION 2013.

2. SHOP DRAWING SUBMITTALS SHALL CONSIST OF PDF FILES. THESE FILES SHALL ALLOW ELECTRONIC STAMPING, REDLINING AND MARKUPS AND THEREFORE SHALL NOT BE LOCKED FROM EDITING.

3. AFTER SHOPS DRAWING REVIEW, RETURNED SHOP DRAWINGS WILL BE MARKED WITH EITHER "APPROVED", "APPROVED AS NOTED" OR "REVISE AND RESUBMIT". NONE OF THIS DESIGNATIONS RELIEVE THE CONTRACTOR OR SUBCONTRACTOR FROM COMPLIANCE WITH ALL OF THE CONSTRUCTION DOCUMENTS INCLUDING THE STRUCTURAL DRAWINGS AND SPECIFICATIONS. ANY REQUEST FOR DEVIATION FROM THESE DRAWINGS AND SPECIFICATION MUST BE MADE IN A "REQUEST FOR INFORMATION" THROUGH THE ENGINEER'S OFFICE.

SPREAD FOOTING SCHEDULE

MARK	FOOTING SIZE	REINFORCING
F1	3'-0" X 3'-0" X 1'-0"	(4) #5 EA. WAY
F2	4'-0" X 4'-0" X 1'-0"	(5) #5 EA. WAY
F3	5'-0" X 5'-0" X 1'-3"	(6) #5 EA. WAY
F4	5'-0" X 5'-0" X 2'-0"	(6) #5 EA. WAY TOP & BOTTOM
F5	3'-0" X 3'-0" X 1'-3"	(4) #5 EA. WAY



OK CERT. OF AUTH. NO. 4530
EXPIRATION 06/30/23
PROJECT NO. 22-017

Engineering Solutions, LLC
6801 North Broadway, Suite 215
Oklahoma City, OK 73116
Tel. (405) 848-4093

WALL ENGINEERING
PO BOX 1457, DURANT, OK 74702
OKLAHOMA CA #5413 EXP. JUNE 30, 2023

SUBMITTAL / REVISIONS:

DATE	BY	SUBMITTAL / REVISION

CITY OF SHAWNEE
WASTE WATER TREATMENT PLANT IMPROVEMENTS
SHAWNEE, OKLAHOMA

GENERAL NOTES

PROJECT NO.
SHN-20-01

DATE
03/11/22

DRAWN BY:
DN

CHECKED BY:
RM

REVIEWED BY:
JH

SCALE:
AS SHOWN

BAR IS ONE HALF INCH ON ORIGINAL DRAWING
0" 1/2"
IF NOT ONE HALF INCH ON THIS SHEET, ADJUST SCALES ACCORDINGLY

SHEET

S101

STATEMENT OF STRUCTURAL SPECIAL INSPECTIONS

STATEMENT OF SPECIAL INSPECTIONS NOTES:

1. THIS STATEMENT OF SPECIAL INSPECTIONS IS INCLUDED AS REQUIRED BY SECTION 1704 OF THE 2015 INTERNATIONAL BUILDING CODE.

2. THE OWNER SHALL EMPLOY ONE OR MORE QUALIFIED SPECIAL INSPECTORS FOR THIS PROJECT. THE SPECIAL INSPECTOR SHALL PROVIDE WRITTEN DOCUMENTATION TO THE BUILDING OFFICIAL DEMONSTRATING THEIR COMPETENCE AND RELEVANT EXPERIENCE OR TRAINING. EXPERIENCE OR TRAINING SHALL BE CONSIDERED RELEVANT WHEN THE DOCUMENTED EXPERIENCE OR TRAINING IS RELATED IN COMPLEXITY TO THE SAME TYPE OF SPECIAL INSPECTION ACTIVITIES FOR PROJECTS OF SIMILAR COMPLEXITY AND MATERIAL QUALITIES.

3. SPECIAL INSPECTOR(S) SHALL KEEP RECORDS OF SPECIAL INSPECTIONS AND TESTS. INSPECTION REPORTS SHALL BE FURNISHED BY THE SPECIAL INSPECTOR(S) TO THE BUILDING OFFICIAL, AND TO THE REGISTERED DESIGN PROFESSIONALS IN RESPONSIBLE CHARGE. SUCH REPORTS SHALL BE SUBMITTED AT THE COMPLETION OF EACH ITERATION OF A SPECIAL INSPECTION/SITE VISIT. REPORTS SHALL INDICATE THAT WORK INSPECTED WAS OR WAS NOT COMPLETED IN CONFORMANCE TO APPROVED CONSTRUCTION DOCUMENTS. DISCREPANCIES SHALL BE BROUGHT TO THE IMMEDIATE ATTENTION OF THE CONTRACTOR FOR CORRECTION. IF THEY ARE NOT CORRECTED, THE DISCREPANCIES SHALL BE BROUGHT TO THE ATTENTION OF THE BUILDING OFFICIAL AND TO THE REGISTERED DESIGN PROFESSIONAL IN RESPONSIBLE CHARGE PRIOR TO THE COMPLETION OF THAT PHASE OF THE WORK. A FINAL REPORT DOCUMENTING REQUIRED SPECIAL INSPECTIONS AND CORRECTION OF ANY DISCREPANCIES NOTED IN THE INSPECTIONS SHALL BE SUBMITTED AT A POINT IN TIME AGREED UPON PRIOR TO THE START OF WORK BY THE APPLICANT TO THE BUILDING OFFICIAL.

4. THE CONTRACTOR IS RESPONSIBLE FOR PROVIDING REASONABLE NOTICE TO THE SPECIAL INSPECTOR(S) REGARDING WHEN ELEMENTS OF THE PROJECT WILL BE READY FOR EFFICIENT IMPLEMENTATION OF SPECIAL INSPECTIONS. THE CONTRACTOR SHALL PROVIDE ACCESS TO THE LATEST VERSION OF ALL APPROVED PLANS AND SHOP DRAWINGS AS REQUIRED FOR THE SPECIAL INSPECTOR'S USE IN PERFORMING SPECIAL INSPECTIONS. THE CONTRACTOR SHALL GRANT ACCESS TO THE OWNER'S SPECIAL INSPECTOR(S) AS IS REASONABLY NECESSARY FOR THE PROPER PERFORMANCE OF SPECIAL INSPECTIONS.

5. SPECIAL INSPECTIONS DO NOT RELIEVE THE CONTRACTOR OF RESPONSIBILITY TO COMPLY WITH ALL REQUIREMENTS OF THE CONTRACT DOCUMENTS. CONSTRUCTION MEANS AND METHODS AND JOBSITE SAFETY ARE SOLELY THE RESPONSIBILITY OF THE CONTRACTOR.

6. REFER TO PROJECT SPECIFICATIONS FOR ADDITIONAL SPECIAL INSPECTION REQUIREMENTS. IF CONFLICTING REQUIREMENTS ARE FOUND, THE MORE STRINGENT PROVISION SHALL CONTROL UNLESS DIRECTED OTHERWISE IN WRITING BY THE STRUCTURAL ENGINEER OF RECORD.

INSPECTION OF FABRICATORS:

WHERE FABRICATION OF STRUCTURAL, LOADBEARING, OR LATERAL LOAD-RESISTING MEMBERS AND ASSEMBLIES IS BEING PERFORMED ON THE PREMISES OF A FABRICATOR'S SHOP, SPECIAL INSPECTION OF THE FABRICATED ITEMS SHALL BE REQUIRED IN ACCORDANCE WITH SECTION 1704.2 OF THE 2015 INTERNATIONAL BUILDING CODE AND AS REQUIRED ELSEWHERE IN THE CODE. (EXCEPT WHERE THE FABRICATOR IS APPROVED IN ACCORDANCE WITH SECTION 1704.2.2)

SUCH SPECIAL INSPECTIONS SHALL BE PERFORMED BY A PROFESSIONAL ENGINEER OR AN EMPLOYEE OF AN APPROVED TESTING AGENCY.

INSPECTION OF STRUCTURAL STEEL CONSTRUCTION:

SPECIAL INSPECTIONS AND NON-DESTRUCTIVE TESTING OF STRUCTURAL STEEL ELEMENTS IN BUILDINGS, STRUCTURES, AND PORTIONS THEREOF SHALL BE IN ACCORDANCE WITH THE QUALITY ASSURANCE INSPECTION REQUIREMENTS OF AISC 360. (NOTE: ALL FIELD WELDS SHALL BE INSPECTED BY AN AWS CERTIFIED WELDING INSPECTOR.)

WELDING INSPECTION AND SPECIAL INSPECTOR QUALIFICATION FOR STRUCTURAL STEEL SHALL BE IN COMPLIANCE WITH AWS D1.1.

INSPECTION OF COLD-FORMED STEEL DECK:

SPECIAL INSPECTIONS AND THE QUALIFICATION OF THE SPECIAL INSPECTOR(S) FOR COLD-FORMED STEEL FLOOR AND ROOF DECK SHALL BE IN ACCORDANCE WITH THE QUALITY ASSURANCE INSPECTION REQUIREMENTS OF SDI QA/QC.

WELDING INSPECTION AND SPECIAL INSPECTOR QUALIFICATION FOR COLD-FORMED STEEL FLOOR AND ROOF DECKS SHALL BE IN COMPLIANCE WITH AWS D1.3

INSPECTION OF CONCRETE CONSTRUCTION:

SPECIAL INSPECTIONS AND TESTS OF CONCRETE CONSTRUCTION SHALL BE PERFORMED IN ACCORDANCE WITH SECTION 1705.3 OF THE 2015 INTERNATIONAL BUILDING CODE AND WITH TABLE 1705.3.

IN THE ABSENCE OF SUFFICIENT DATA OR DOCUMENTATION PROVIDING EVIDENCE OF CONFORMANCE TO QUALITY STANDARDS FOR MATERIALS IN CHAPTER 19 AND 20 OF ACI 318, THE BUILDING OFFICIAL SHALL REQUIRE TESTING OF MATERIALS IN ACCORDANCE WITH THE APPROPRIATE STANDARDS AND CRITERIA FOR THE MATERIAL IN CHAPTERS 19 AND 20 OF ACI 318

WELDING INSPECTION AND SPECIAL INSPECTOR QUALIFICATION FOR REINFORCING STEEL SHALL BE IN COMPLIANCE WITH AWS D1.4 AND ACI 318.

INSPECTION OF SOILS:

SPECIAL INSPECTIONS AND TESTS OF EXISTING SITE SOIL CONDITIONS, FILL PLACEMENT, AND LOAD-BEARING REQUIREMENTS SHALL BE PERFORMED IN ACCORDANCE WITH SECTION 1705.6 OF THE 2015 INTERNATIONAL BUILDING CODE AND TABLE 1705.6. THE APPROVED GEOTECHNICAL REPORT AND THE CONSTRUCTION DOCUMENTS PREPARED BY THE REGISTERED DESIGN PROFESSIONALS SHALL BE USED TO DETERMINE COMPLIANCE. DURING FILL PLACEMENT, THE SPECIAL INSPECTOR SHALL VERIFY THAT PROPER MATERIALS AND PROCEDURES ARE USED IN ACCORDANCE WITH THE PROVISIONS OF THE APPROVED GEOTECHNICAL REPORT.

STATEMENT OF RESPONSIBILITY:

EACH CONTRACTOR RESPONSIBLE FOR THE CONSTRUCTION, FABRICATION, OR INSTALLATION OF A MAIN WIND OR SEISMIC FORCE-RESISTING SYSTEM OR A WIND OR SEISMIC FORCE-RESISTING COMPONENT LISTED IN THE STATEMENT OF SPECIAL INSPECTIONS SHALL SUBMIT A WRITTEN STATEMENT OF RESPONSIBILITY TO THE AUTHORITY HAVING JURISDICTION, THE RESPONSIBLE DESIGN PROFESSIONAL AND THE OWNER PRIOR TO THE COMMENCEMENT OF WORK ON THE SYSTEM OR COMPONENT. THE CONTRACTOR'S STATEMENT OF RESPONSIBILITY SHALL CONTAIN THE FOLLOWING:

A. ACKNOWLEDGEMENT OF AWARENESS OF THE SPECIAL REQUIREMENTS CONTAINED IN THE STATEMENT OF SPECIAL INSPECTIONS.

B. ACKNOWLEDGEMENT THAT CONTROL WILL BE EXERCISED TO OBTAIN COMPLIANCE WITH THE CONSTRUCTION DOCUMENTS.

C. PROCEDURES FOR EXERCISING CONTROL WITHIN THE CONTRACTOR'S ORGANIZATION, THE METHOD AND FREQUENCY OF REPORTING, AND THE DISTRIBUTION OF REPORTS.

D. IDENTIFICATION AND QUALIFICATIONS OF THE PERSON(S) EXERCISING SUCH CONTROL AND THEIR POSITION(S) IN THE ORGANIZATION.

REQUIRED VERIFICATIONS AND SPECIAL INSPECTIONS FOR STEEL CONSTRUCTION

CHECK IF REQUIRED	CHECK IF REQUIRED	VERIFICATION AND INSPECTION	CONTINUOUS	PERIODIC
☑		1. MATERIAL VERIFICATION OF STRUCTURAL STEEL AND COLD-FORMED STEEL DECK ELEMENTS:		
		A. FOR STRUCTURAL STEEL, IDENTIFICATION MARKINGS SHALL CONFORM TO AISC 360-10		✖
		B. FOR OTHER STEEL, IDENTIFICATION MARKINGS SHALL CONFORM TO ASTM STANDARDS SPECIFIED IN THE APPROVED CONSTRUCTION DOCUMENTS		✖
☐		2. INSPECTION OF STEEL ELEMENTS OF COMPOSITE CONSTRUCTION PRIOR TO CONCRETE PLACEMENT:		
		A. PLACEMENT AND INSTALLATION OF STEEL DECK	QC & QA	
		B. PLACEMENT AND INSTALLATION OF STEEL HEADED STUD ANCHORS	QC & QA	
		C. DOCUMENT ACCEPTANCE OR REJECTION OF STEEL ELEMENTS	QC & QA	

TABLE 1705.3: REQUIRED SPECIAL INSPECTIONS AND TESTS OF CONCRETE CONSTRUCTION

CHECK IF REQUIRED	VERIFICATION AND INSPECTION	CONTINUOUS	PERIODIC
☑	1. INSPECT REINFORCEMENT, INCLUDING PRESTRESSING TENDONS, AND VERIFY PLACEMENT		✖
☑	2. REINFORCING BAR WELDING:		
	A. VERIFY WELDABILITY OF REINFORCING BARS OTHER THAN ASTM A706		✖
	B. INSPECT SINGLE-PASS FILLET WELDS, MAX. $\frac{5}{16}$"; AND		✖
	C. INSPECT ALL OTHER WELDS	✖	
☑	3. INSPECT ANCHORS CAST IN CONCRETE		✖
☑	4. INSPECT ANCHORS POST-INSTALLED IN HARDENED CONCRETE MEMBERS		
	A. ADHESIVE ANCHORS INSTALLED IN HORIZONTALLY OR UPWARDLY INCLINED ORIENTATIONS TO RESIST SUSTAINED TENSION LOADS	✖	
	B. MECHANICAL ANCHORS AND ADHESIVE ANCHORS NOT DEFINED IN 4.A.		✖
☑	5. VERIFY USE OF REQUIRED DESIGN MIX		✖
☑	6. PRIOR TO CONCRETE PLACEMENT, FABRICATE SPECIMENS FOR STRENGTH TESTS, PERFORM SLUMP AND AIR CONTENT TESTS, AND DETERMINE THE TEMPERATURE OF THE CONCRETE	✖	
☑	7. INSPECT CONCRETE AND SHOTCRETE PLACEMENT FOR PROPER APPLICATION TECHNIQUES	✖	
☑	8. VERIFY MAINTENANCE OF SPECIFIED CURING TEMPERATURE AND TECHNIQUES		✖
☐	9. INSPECT PRESTRESSED CONCRETE FOR:		
	A. APPLICATION OF PRESTRESSING FORCES; AND	✖	
	B. GROUTING OF BONDED PRESTRESSING TENDONS	✖	
☐	10. INSPECT ERECTION OF PRECAST CONCRETE MEMBERS		✖
☐	11. VERIFY IN-SITU CONCRETE STRENGTH, PRIOR TO STRESSING OF TENDONS IN POST-TENSIONED CONCRETE AND PRIOR TO REMOVAL OF SHORES AND FORMS FROM BEAMS AND STRUCTURAL SLABS		✖
☑	12. INSPECT FORMWORK FOR SHAPE, LOCATION, AND DIMENSIONS OF THE CONCRETE MEMBER BEING FORMED		✖

REQUIRED VERIFICATIONS AND SPECIAL INSPECTIONS FOR STEEL CONSTRUCTION (BOLTING)

CHECK IF REQUIRED	VERIFICATION AND INSPECTION	CONTINUOUS	PERIODIC
☑	1. INSPECTION PRIOR TO BOLTING (AISC 360-10):		
	A. VERIFY IDENTIFICATION MARKINGS CONFORM TO ASTM STANDARDS SPECIFIED IN THE APPROVED CONSTRUCTION DOCUMENTS.		QC & QA
	B. MANUFACTURER'S CERTIFICATIONS AVAILABLE FOR FASTENER MATERIALS	QA	QC
	C. FASTENERS MARKED IN ACCORDANCE WITH ASTM REQUIREMENTS		QC & QA
	D. PROPER FASTENERS SELECTED FOR THE JOINT DETAIL (GRADE, TYPE, BOLT LENGTH IF THREADS ARE TO BE EXCLUDED FROM SHEAR PLANE)		QC & QA
	E. PROPER BOLTING PROCEDURE SELECTED FOR JOINT DETAIL		QC & QA
	F. CONNECTING ELEMENTS, INCLUDING THE APPROPRIATE FAYING SURFACE CONDITION AND HOLE PREPARATION, IF SPECIFIED, MEET APPLICABLE REQUIREMENTS		QC & QA
	G. PRE-INSTALLATION VERIFICATION TESTING BY INSTALLATION PERSONNEL OBSERVED AND DOCUMENTED FOR FASTENER ASSEMBLIES AND METHODS USED	QC	QA
	H. PROPER STORAGE PROVIDED FOR BOLTS, NUTS, WASHERS, AND OTHER FASTENER COMPONENTS		QC & QA
☑	2. INSPECTION DURING BOLTING (AISC 360-10):		
	A. FASTENER ASSEMBLIES, OF SUITABLE CONDITION, PLACED IN ALL HOLES AND WASHERS (IF REQUIRED) ARE POSITIONED AS REQUIRED		QC & QA
	B. SNUG-TIGHT JOINTS AND JOINTS BROUGHT TO THE SNUG-TIGHT CONDITION PRIOR TO THE PRESTRESSING OPERATION		QC & QA
	C. FASTENER COMPONENT NOT TURNED BY THE WRENCH PREVENTED FROM ROTATING		QC & QA
	D. FASTENERS ARE PRETENSIONED IN ACCORDANCE WITH THE RCSC SPECIFICATION, PROGRESSING SYSTEMATICALLY FROM THE MOST RIGID POINT TOWARD THE FREE EDGES		QC & QA
	E. PRETENSIONED AND SLIP-CRITICAL JOINTS USING TURN-OF-NUT WITH MATCHMARKING, TWIST-OFF BOLT, OR DIRECT TENSION INDICATOR METHODS OF INSTALLATION		QC & QA
	F. PRETENSIONED AND SLIP-CRITICAL JOINTS USING TURN-OF-NUT WITHOUT MATCHMARKING OR CALIBRATED WRENCH METHODS OF INSTALLATION	QC & QA	
☑	3. INSPECTION AFTER BOLTING (AISC 360-10):		
	A. DOCUMENT ACCEPTANCE OR REJECTION OF BOLTED CONNECTIONS	QC & QA	

REQUIRED VERIFICATIONS AND SPECIAL INSPECTIONS FOR STEEL CONSTRUCTION (WELDING)

CHECK IF REQUIRED	VERIFICATION AND INSPECTION	CONTINUOUS	PERIODIC
☑	1. INSPECTION PRIOR TO WELDING (AISC 360-10):		
	A. VERIFY IDENTIFICATION MARKINGS OF WELD FILLER MATERIALS CONFORM TO AWS SPECIFICATION IN THE APPROVED CONSTRUCTION DOCUMENTS		✖
	B. WELDING PROCEDURE SPECIFICATIONS ARE AVAILABLE	QC & QA	
	C. MANUFACTURER CERTIFICATIONS FOR WELDING CONSUMABLES AVAILABLE	QC & QA	
	D. MATERIAL IDENTIFICATION (TYPE/GRADE) AND WELDER IDENTIFICATION SYSTEM		QC & QA
	E. FIT-UP OF WELDS INCLUDING BUT NOT LIMITED TO JOINT PREPARATION, DIMENSIONS, CLEANLINESS, TACKING, AND BACKING TYPE AND FIT AS APPLICABLE		QC & QA
	F. CONFIGURATION AND FINISH OF ACCESS HOLES		QC & QA
	G. CHECK WELDING EQUIPMENT		QC
☑	2. INSPECTION DURING WELDING (AISC 360-10):		
	A. USE OF QUALIFIED WELDERS		QC & QA
	B. PACKAGING AND EXPOSURE CONTROL AND HANDLING OF WELDING CONSUMABLES		QC & QA
	C. NO WELDING OVER CRACKED TACK WELDS		QC & QA
	D. ENVIRONMENTAL CONDITIONS INCLUDING BUT NOT LIMITED TO PRECIPITATION, TEMPERATURE, AND WIND SPEEDS WITHIN LIMITS		QC & QA
	E. VERIFY SETTINGS ON EQUIPMENT, TRAVEL SPEEDS, ELECTED MATERIALS, SHIELDING GAS TYPE/FLOW RATE, PREHEATING INTERPASS TEMPERATURES AND PROPER POSITION MEETS WPS STANDARDS		QC & QA
	F. VERIFY WELDING TECHNIQUES FOR INTERPASS, FINAL CLEANING, PROFILE LIMITATIONS, AND QUALITY REQUIREMENTS		QC & QA
☑	3. INSPECTION AFTER WELDING (AISC 360-10):		
	A. WELDS ARE CLEANED AND PAINTED WHERE REQUIRED		QC & QA
	B. VERIFY SIZE, LENGTH, AND LOCATIONS OF WELDS	QC & QA	
	C. VISUALLY VERIFY WELDS FOR CRACK PROHIBITION, WELD/BASE-METAL FUSION, CRATER CROSS SECTION, WELD PROFILES, WELD SIZE, UNDERCUTTING, AND POROSITY	QC & QA	
	D. ARC STRIKES, K-AREA CRACKS WITHIN 3" OF WELD, REMOVAL OF BACKING, AND REPAIR ACTIVITIES AS APPLICABLE	QC & QA	
	E. DOCUMENTATION OF ACCEPTANCE OR REJECTION OF WELDED JOINT OR MEMBER	QC & QA	
☑	4. REQUIREMENTS FOR STRUCTURAL STEEL AND COLD-FORMED STEEL DECK:		
	A. INSPECT COMPLETE AND PARTIAL JOINT PENETRATION GROOVE WELDS	✖	
	B. INSPECT MULTIPASS FILLET WELDS	✖	
	C. INSPECT SINGLE PASS FILLET WELDS > 5/16"	✖	
	D. INSPECT PLUG AND SLOT WELDS	✖	
	E. INSPECT SINGLE-PASS FILLET WELDS ≤ 5/16"		✖
	F. INSPECT FLOOR AND ROOF DECK WELDS		✖
	G. INSPECT WELDED STUDS AND DEFORMED BAR ANCHORS		✖
	H. INSPECT WELDED SHEET STEEL FOR COLD-FORMED STEEL MEMBERS		✖
	I. INSPECT WELDING OF STAIRS AND RAILING SYSTEMS		✖

TABLE 1705.6: REQUIRED SPECIAL INSPECTIONS AND TESTS OF SOIL

CHECK IF REQUIRED	VERIFICATION AND INSPECTION	CONTINUOUS	PERIODIC
☑	1. VERIFY MATERIALS BELOW SHALLOW FOUNDATIONS ARE ADEQUATE TO ACHIEVE THE DESIGN BEARING CAPACITY		✖
☑	2. VERIFY EXCAVATIONS ARE EXTENDED TO PROPER DEPTH AND HAVE REACHED PROPER MATERIAL		✖
☑	3. PERFORM CLASSIFICATION AND TESTING OF COMPACTED FILL MATERIALS		✖
☑	4. VERIFY USE OF PROPER MATERIALS, DENSITIES, AND LIFT THICKNESS DURING PLACEMENT AND COMPACTION OF COMPACTED FILL	✖	
☑	5. PRIOR TO PLACEMENT OF COMPACTED FILL, INSPECT SUBGRADE AND VERIFY THAT SITE HAS BEEN PREPARED PROPERLY		✖

WALL ENGINEERING
PO BOX 1457, DURANT, OK 74702
OKLAHOMA CA #5413 EXP. JUNE 30, 2023

SUBMITTAL / REVISIONS:

DATE	BY	SUBMITTAL / REVISION

CITY OF SHAWNEE
WASTE WATER TREATMENT PLANT IMPROVEMENTS
SHAWNEE, OKLAHOMA

SPECIAL INSPECTION NOTES

PROJECT NO.
SHN-20-01

DATE
03/11/22

DRAWN BY:
DN

CHECKED BY:
RM

REVIEWED BY:
JH

SCALE:
AS SHOWN

BAR IS ONE HALF INCH ON ORIGINAL DRAWING
0" 1/2"
IF NOT ONE HALF INCH ON THIS SHEET, ADJUST SCALES ACCORDINGLY

SHEET
S102



OK CERT. OF AUTH. NO. 4530
EXPIRATION 06/30/23
PROJECT NO. 22-017

Engineering Solutions, LLC
6801 North Broadway, Suite 215
Oklahoma City, OK 73116
Tel. (405) 848-4093

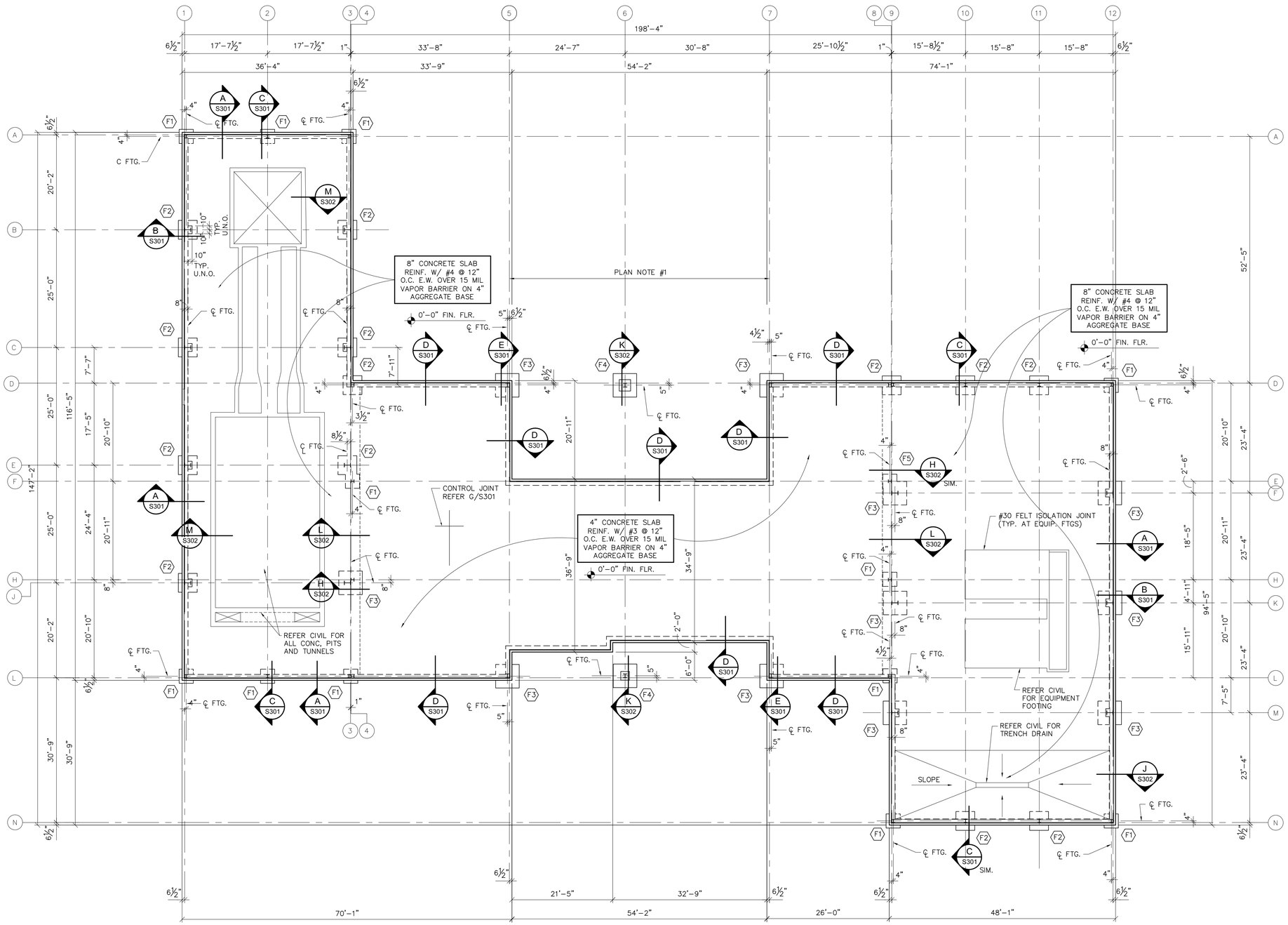

A FOUNDATION PLAN

3/32" = 1'-0"

NORTH

PLAN NOTES:

#1....LIMIT FRAMES COLUMN DEPTH TO 10" AT GRIDS 5, 6 AND 7.

WALL ENGINEERING
PO BOX 1457, DURANT, OK 74702
OKLAHOMA CA #5413 EXP. JUNE 30, 2023

SUBMITTAL / REVISIONS:

DATE	BY	SUBMITTAL / REVISION

CITY OF SHAWNEE
WASTE WATER TREATMENT PLANT IMPROVEMENTS
SHAWNEE, OKLAHOMA

FOUNDATION PLAN

PROJECT NO.	SHN-20-01
DATE	03/11/22
DRAWN BY:	DN
CHECKED BY:	RM
REVIEWED BY:	JH
SCALE:	AS SHOWN

BAR IS ONE HALF INCH ON ORIGINAL DRAWING
0" 1/2"
IF NOT ONE HALF INCH ON THIS SHEET, ADJUST SCALES ACCORDINGLY

PROFESSIONAL STRUCTURAL ENGINEER
JAMES ALAN HOLMAN
18879
OKLAHOMA

OK CERT. OF AUTH. NO. 4530
EXPIRATION 06/30/23
PROJECT NO. 22-017

Engineering Solutions, LLC
6801 North Broadway, Suite 215
Oklahoma City, OK 73116
Tel. (405) 848-4093

SHEET

S201

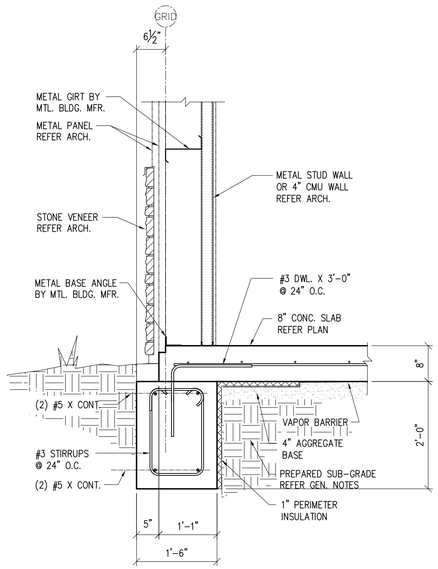

A **FOUNDATION DETAIL**
3/4" = 1'-0"

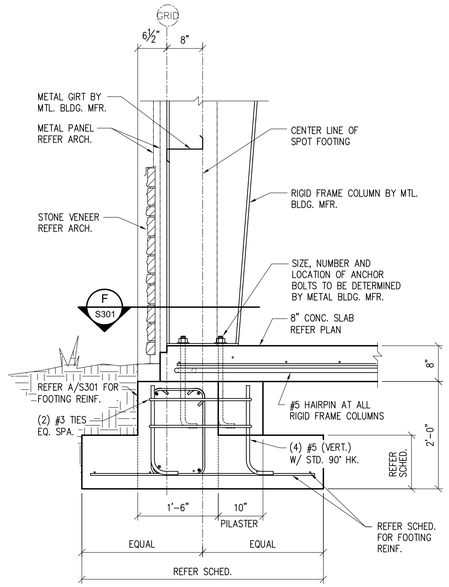

B **FOUNDATION DETAIL**
3/4" = 1'-0"

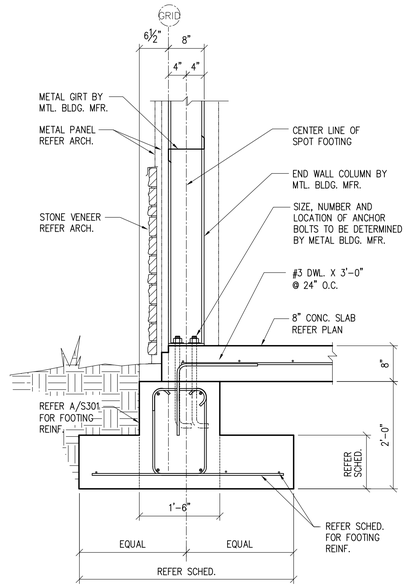

C **FOUNDATION DETAIL**
3/4" = 1'-0"

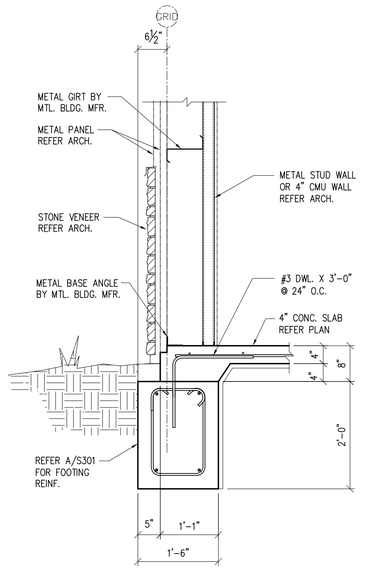

D **FOUNDATION DETAIL**
3/4" = 1'-0"

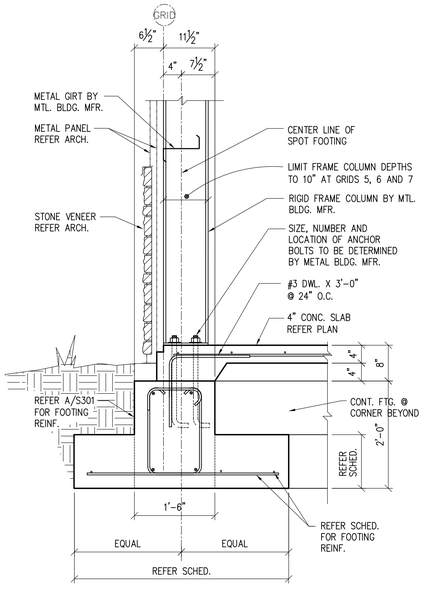

E **FOUNDATION DETAIL**
3/4" = 1'-0"

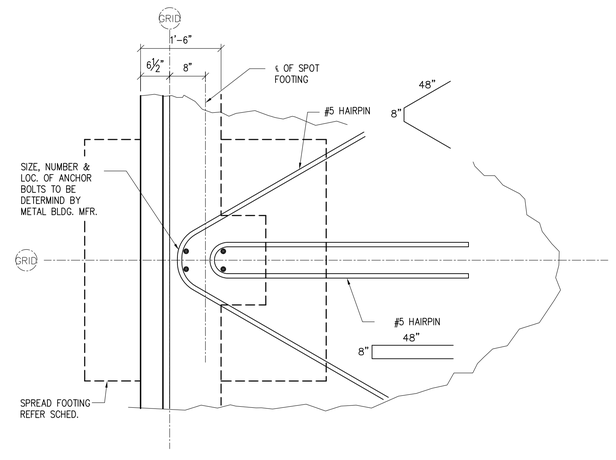

F **FOUNDATION DETAIL**
3/4" = 1'-0"

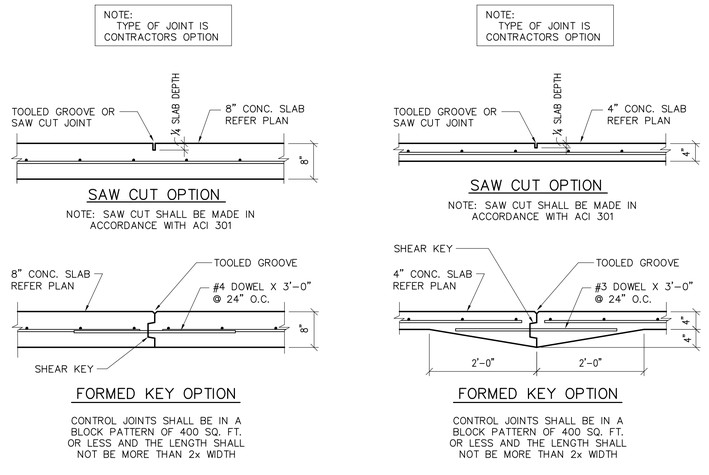

G **FOUNDATION DETAIL**
3/4" = 1'-0"

WALL ENGINEERING
PO BOX 1457, DURANT, OK 74702
OKLAHOMA CA #5413 EXP. JUNE 30, 2023

SUBMITTAL / REVISIONS:
DATE | BY | SUBMITTAL / REVISION

CITY OF SHAWNEE
WASTE WATER TREATMENT PLANT IMPROVEMENTS
SHAWNEE, OKLAHOMA

FOUNDATION DETAILS

PROJECT NO.
SHN-20-01
DATE
03/11/22
DRAWN BY:
DN
CHECKED BY:
RM
REVIEWED BY:
JH
SCALE:
AS SHOWN

BAR IS ONE HALF INCH ON ORIGINAL DRAWING
0" 1/2"
IF NOT ONE HALF INCH ON THIS SHEET, ADJUST SCALES ACCORDINGLY

SHEET
S301



OK CERT. OF AUTH. NO. 4530
EXPIRATION 06/30/23
PROJECT NO. 22-017

Engineering Solutions, LLC
6801 North Broadway, Suite 215
Oklahoma City, OK 73116
Tel. (405) 848-4093

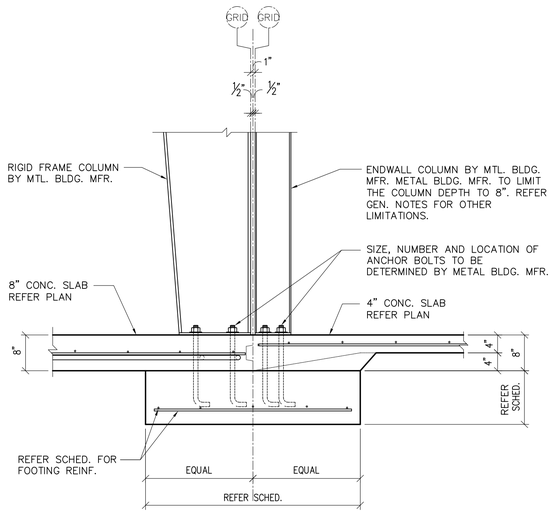

H FOUNDATION DETAIL
3/4" = 1'-0"

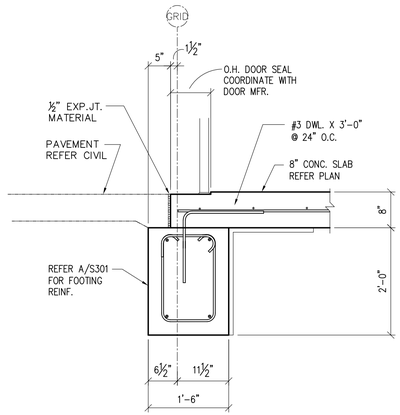

J FOUNDATION DETAIL
3/4" = 1'-0"

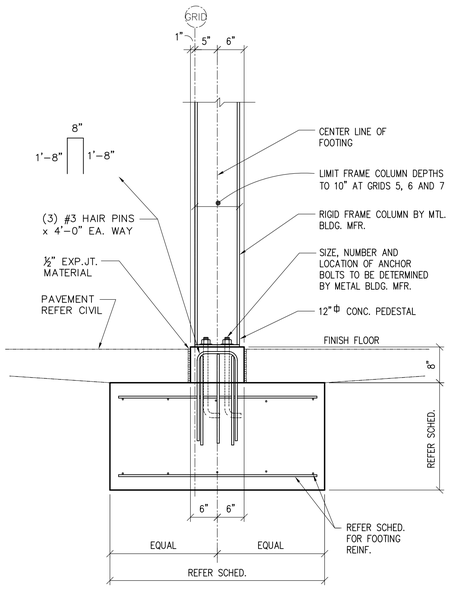

K FOUNDATION DETAIL
3/4" = 1'-0"

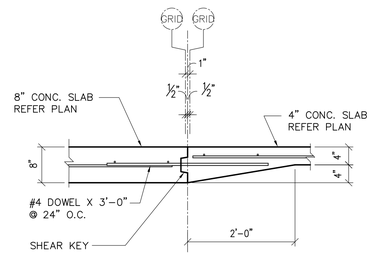

L FOUNDATION DETAIL
3/4" = 1'-0"

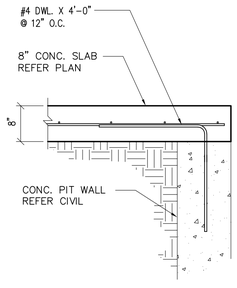

M FOUNDATION DETAIL
3/4" = 1'-0"

WALL ENGINEERING
PO BOX 1457, DURANT, OK 74702
OKLAHOMA CA #5413 EXP. JUNE 30, 2023

SUBMITTAL / REVISIONS:
DATE | BY | SUBMITTAL / REVISION

CITY OF SHAWNEE
WASTE WATER TREATMENT PLANT IMPROVEMENTS
SHAWNEE, OKLAHOMA

FOUNDATION DETAILS

PROJECT NO.
SHN–20–01
DATE
03/11/22
DRAWN BY:
DN
CHECKED BY:
RM
REVIEWED BY:
JH
SCALE:
AS SHOWN

BAR IS ONE HALF INCH ON ORIGINAL DRAWING
0" 1/2"
IF NOT ONE HALF INCH ON THIS SHEET, ADJUST SCALES ACCORDINGLY

SHEET
S302



OK CERT. OF AUTH. NO. 4530
EXPIRATION 06/30/23
PROJECT NO. 22-017

Engineering Solutions, LLC
6801 North Broadway, Suite 215
Oklahoma City, OK 73116
Tel. (405) 848-4093

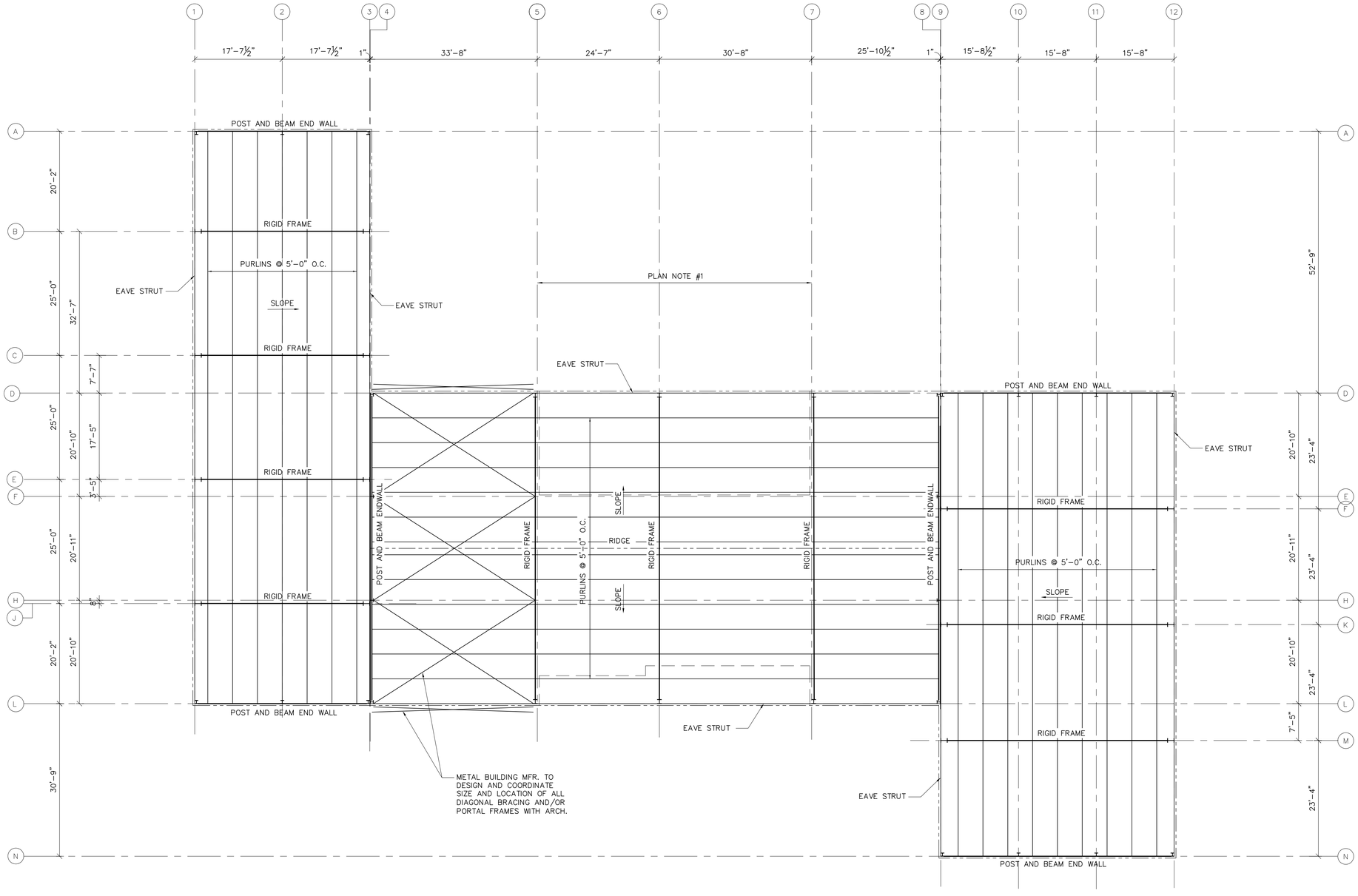

A ROOF FRAMING PLAN

3/32" = 1'-0"

NORTH

PLAN NOTES:

#1.....LIMIT FRAMES COLUMN DEPTH TO 10" AT GRIDS 5, 6 AND 7.

WALL ENGINEERING
PO BOX 1457, DURANT, OK 74702
OKLAHOMA CA #5413 EXP. JUNE 30, 2023

SUBMITTAL / REVISIONS:

DATE	BY	SUBMITTAL / REVISION

CITY OF SHAWNEE
WASTE WATER TREATMENT PLANT IMPROVEMENTS
SHAWNEE, OKLAHOMA

ROOF FRAMING PLAN

PROJECT NO.	SHN-20-01
DATE	03/11/22
DRAWN BY:	DN
CHECKED BY:	RM
REVIEWED BY:	JH
SCALE:	AS SHOWN

BAR IS ONE HALF INCH ON ORIGINAL DRAWING
0" 1/2"
IF NOT ONE HALF INCH ON THIS SHEET, ADJUST SCALES ACCORDINGLY

SHEET

S401



OK CERT. OF AUTH. NO. 4530
EXPIRATION 06/30/23
PROJECT NO. 22-017

Engineering Solutions, LLC
6801 North Broadway, Suite 215
Oklahoma City, OK 73116
Tel. (405) 848-4093

NOTE:

1. COLLECTION SYSTEM LIFT STATION PANELS TO BE REPLACED LIKE-KIND AND INCLUDE ADDITION OF COMPLETE SCADA FUNCTIONALITY TO NORTHSIDE WWTP. PANELS TO BE PROVIDED BY AND INSTALLED TURN-KEY BY HAYNES EQUIPMENT.

LIFT STATION SCHEDULE

NO.	LIFT STATION NAME	ADDRESS
1	ACME	13415 ACME RD.
2	AIRPORT	2001 ½ AIRPORT DR.
3	TENNESSEE	902 ½ W. DUNBAR ST.
4	BRYAN	110 S. BRYAN AVE.
5	KIMBERLY	103 ½ N. KIMBERLY AVE.
6	RIVER	1101 ½ GORDON COOPER DR.
7	EXPO	1801 N. LEO AVE.
8	CENTRAL	39605 ½ W. INDEPENDENCE ST.
9	TUCKER	2312 ½ N. TUCKER AVE.
10	DEWEY	1228 ½ W. DEWEY ST.
11	FARRALL	1010 W. FARRALL ST.
12	COUNTRY CLUB	2875 E. HIGHLAND ST.
13	WES WATKINS (MCLOUD) #1	WES WATKINS RESERVOIR PARK
14	WES WATKINS (MCLOUD) #2	WES WATKINS RESERVOIR PARK
15	JOE COOPER	4920 ½ N AUTOMALL DR.

WALL ENGINEERING
223 N. WASHINGTON AVE., DURANT, OK 74701
OKLAHOMA CA #6413 EXP. JUNE 30, 2023

SUBMITTAL / REVISIONS:

DATE	BY	SUBMITTAL / REVISION
03/22	JR	ODEQ SUBMITTAL
06/22	JR	ISSUED FOR BIDDING

SHAWNEE MUNICIPAL AUTHORITY
WASTEWATER SYSTEM IMPROVEMENTS
CONTRACT DOCUMENTS VOL. 4 OF 6 - NORTHSIDE WWTP

COLLECTION SYSTEM
LIFT STATION IMPROVEMENTS

PROJECT NO.
SHN-20-01

DATE
06/22

DRAWN BY:
JR

CHECKED BY:
BW

REVIEWED BY:
DBW

SCALE:
1"=2000'

BAR IS ONE INCH ON ORIGINAL DRAWING
0" 1"
IF NOT ONE INCH ON THIS SHEET, ADJUST SCALES ACCORDINGLY

SHEET

CS-1

REGISTERED PROFESSIONAL ENGINEER
06/30/22
BRANDON WALL
21108
OKLAHOMA

NOTES ON THRUST BLOCKING

1.) ALL BLOCKING SHALL BE AGAINST UNDISTURBED HAND DUG SOIL AND SHALL BE CONCRETE HAVING A MINIMUM 28 DAY STRENGTH OF 2000 PER SQUARE INCH.

2.) THRUST CALCULATORS TO BE BASED ON THRUST DUE TO WATER PRESSURE AT 100% OF TEST PRESSURE.

THRUST = 2 AP SIN 1/2 Φ

A = AREA OF PIPE
P = WATER PRESSURE
Φ = DEFLECTION ANGLE.

3.) VERTICAL UPLIFT BLOCKS SHALL BE DESIGNED ON THE BASIS OF 150 LBS. PER CU. FT. FOR CONCRETE AND SOIL AT 120 LBS. PER CU. FT. OVER THE AREA OF BLOCK.

4.) VERTICAL DOWN THRUST BLOCKS SHALL BE DESIGNED ON THE BASIS OF 2000 PER SQ. FT. ALLOWABLE SOIL BEARING PRESSURE. DIMENSIONS MAY BE DECREASED WITH APPROVAL OF THE ENGINEER IF MEASURED SOIL CONDITIONS PERMIT. IN POOR SOIL CONDITIONS, BLOCK DIMENSIONS SHALL BE INCREASED IN PROPORTION TO ALLOWABLE BEARING VALUE.

5.) THRUST BLOCKS ON HORIZONTAL BENDS, TEES, CROSSES, AND REDUCERS SHALL BE SIZED BASED ON 24000 LBS. PER SQ. FT. OF BLOCKING SURFACE AREA IN CONTACT WITH UNDISTURBED SOIL, BLOCK DIMENSIONS MAY BE DECREASED WITH APPROVAL OF THE ENGINEER IF MEASURED SOIL CONDITIONS PERMIT. IN POOR SOIL CONDITIONS, BLOCK DIMENSIONS SHALL BE INCREASED IN PROPORTION TO THE ALLOWABLE BEARING VALUE.

6.) ALL BLOCKING SHALL HAVE A MINIMUM SOIL COVER OF 1 FT.

7.) ADDITIONAL REINFORCING MAY BE REQUIRED FOR HORIZONTAL BLOCKING TO HANDLE UNUSUAL SHEAR LOADING CONDITIONS.

8.) ANCHOR COLLARS SHALL BE REINFORCED IN ACCORDANCE WITH REINFORCING BAR SCHEDULE FOR REDUCED BLOCKS SHOWN ABOVE. STEEL ANCHOR RING IN ACCORDANCE WITH DIMENSIONS OF ANCHOR COLLAR.

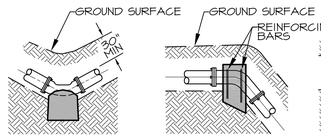

TYPICAL BLOCKING FOR VERTICAL BENDS

TYPICAL BLOCKING FOR HORIZONTAL BENDS

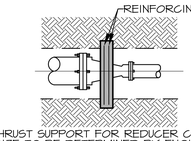

THRUST SUPPORT FOR REDUCER CONNECTION (SIZE TO BE DETERMINED BY ENGINEER)

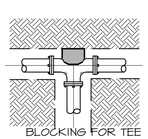
BLOCKING FOR TEE

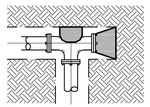
SPECIAL BLOCKING FOR TEE WITH PLUG (WHEN DIRECTED BY ENGINEER)

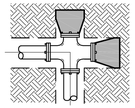
TYPICAL SECTION OF CROSS & 2 PLUG BLOCKING (WHEN DIRECTED BY ENGINEER)

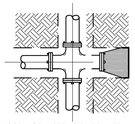
TYPICAL SECTION OF CROSS & BLOCKING (WHEN DIRECTED BY ENGINEER)

GENERAL DATA FOR BLOCKING STANDARD FITTING						
THRUST IN TONS EXERTED AT PLUGS, TEES AND BENDS FOR EACH 100 PSI OF TEST PRESSURE						
PIPE SIZE	PLUG	TEE	90° BEND	45° BEND	22.5° BEND	11.25° BEND
4" or less	0.63	0.63	0.89	0.48	0.25	0.12
6"	1.40	1.40	2.00	1.08	0.55	0.28
8"	2.50	2.50	3.55	1.92	0.98	0.49
10"	3.93	3.93	5.55	3.00	1.53	0.77
12"	5.65	5.65	8.00	4.33	2.21	1.11
14"	7.70	7.70	10.88	5.89	3.00	1.51
16"	10.05	10.05	14.21	7.69	3.85	1.97
18"	12.70	12.70	17.99	9.74	4.96	2.49
20"	15.71	15.71	22.22	12.02	6.13	3.08
24"	22.67	22.67	32.00	17.31	8.83	4.43
27"	28.63	28.63	40.48	21.91	11.17	5.61
30"	35.35	35.35	50.00	27.06	13.79	6.93
36"	50.90	50.90	72.98	38.95	19.89	9.98
42"	69.27	69.27	97.97	53.02	27.03	13.58
48"	90.48	90.48	127.96	69.25	35.30	17.74
54"	114.51	114.51	161.94	87.64	44.68	22.45

THRUST BLOCKING DETAILS
N.T.S.

MANHOLE NOTES:

1. PRECAST RISERS, CONES, FLOORS, GRADE RINGS, STEPS, AND RINGS AND COVERS SHALL BE MANUFACTURED ACCORDING TO THE MOST RECENT ASTM C-478 SPECIFICATIONS.
2. ALL MANHOLE CONSTRUCTION SHALL BE WATERTIGHT. JOINTS SHALL BE RUBBER GASKET MANHOLE SECTIONS WITH PROFILE JOINT AND FORSHEDA 114 JOINT SEALS.
3. ANY ERECTION HOLES, STEP HOLES, OR OTHER HOLES THROUGH THE WALL OF THE MANHOLE SHALL BE COVERED WITH 3" CONCRETE GROUT. GRADE RINGS SHALL BE FORMED WITH TONGUE AND GROOVE OF LUGS AND NOTCHES.
4. GRADE RINGS SHALL BE SET IN MORTAR OR PLASTIC JOINT COMPOUND.
5. WHEN FIELD CONDITIONS REQUIRE HEIGHT TO BE ADJUSTED, ADDITIONAL GRADE RINGS MAY BE USED AS DIRECTED BY THE ENGINEER.
6. WHENEVER THE SUBGRADE FOR ANY MANHOLE OR DROP MANHOLE IS OF AN UNSATISFACTORY MATERIAL, SAME SHALL BE REMOVED AND REPLACED WITH A CRUSHED ROCK BEDDING AND COMPACTED TO THE SATISFACTION OF THE ENGINEER.
7. ALL CONCRETE ENCASEMENT IN ROCK SHALL BE POURED AGAINST THE FACE OF THE ROCK. NO PAYMENT WILL BE MADE FOR EXTRA CONCRETE USED IN OVER BREAKAGE OF THE DIMENSIONS AS SHOWN ON THE TYPICAL SECTION OF CONCRETE ENCASEMENT.
8. BACKFILL EXCAVATION WITH SELECT FILL COMPACTED IN 8" LAYERS TO 95% OF MAXIMUM DENSITY WITHIN 2% OF OPTIMUM MOISTURE AS DETERMINED BY ASTM D-698.
9. CENTERLINE OF ALL PIPES ENTERING AND LEAVING SHALL PASS THROUGH CENTER OF MANHOLE.
10. CONSTRUCT FLOW CHANNEL FOR ALL PIPES ENTERING MANHOLE, INCLUDING SERVICES. MAINTAIN A CONSTANT GRADE THROUGHOUT EACH INVERT.
11. INVERT MUST HAVE A CHANNEL DEPTH OF EQUAL TO AT LEAST HALF THE LARGEST PIPE DIAMETER.
12. ALL PIPE ENTERING THE MANHOLE MORE THAN 24" ABOVE AN INVERT MUST HAVE A DROP PIPE.
13. WHENEVER SEWER PIPE IS CONNECTED INTO THE WALL OF A MANHOLE WITHOUT A RESILIENT MANHOLE PIPE CONNECTOR THE FIRST JOINT OF THE SEWER PIPE SHALL BE LOCATED A MAXIMUM OF 12" OUTSIDE THE WALL OF THE MANHOLE. CONNECTION INTO MANHOLE WITHOUT A RESILIENT CONNECTOR WILL BE USED ONLY UPON APPROVAL OF THE ENGINEER.
14. FRAME & COVER SHALL BE INSTALLED TO CONCRETE WITH 2 ROWS OF MASTIC.
15. AVERAGE WEIGHT OF CASTING SHALL NOT BE LESS THAN 95% OF: RING 228 LBS; COVER 195 LBS; TOTAL 430 LBS.
16. MANHOLES MAY HAVE EITHER PRECAST OR CAST-IN-PLACE BASES. BASE DIAMETER TO MATCH DETAILS.
17. MANHOLE AND BASE SHALL BE MANUFACTURED IN ACCORDANCE WITH C478.
18. MINIMUM BASE INSIDE DIAMETER SHALL BE BASED ON THE NUMBER AND SIZE OF THE PIPES ENTERING THE MANHOLE, THE ELEVATION OF THE PIPES, AND THE MINIMUM SPACING BETWEEN THE PIPES.

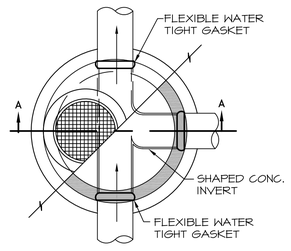

STANDARD MANHOLE PLAN
N.T.S.

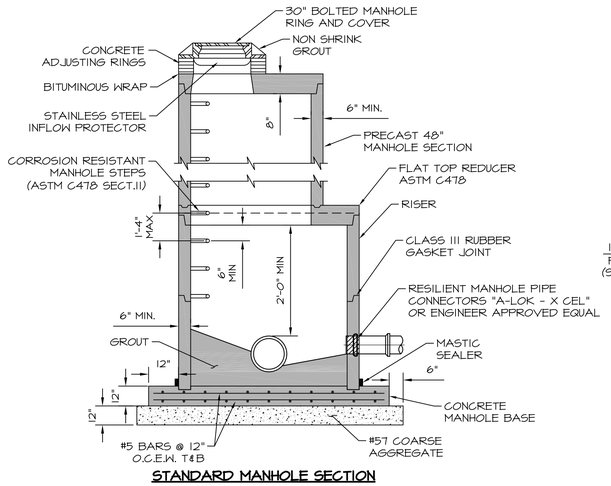

STANDARD MANHOLE SECTION

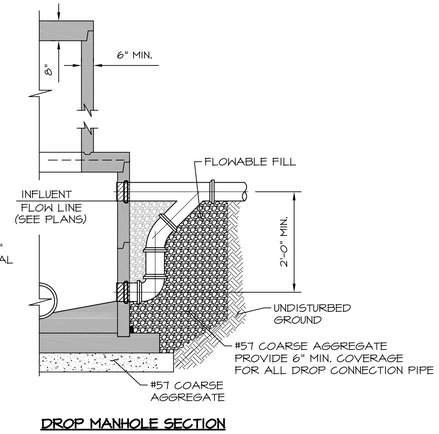

DROP MANHOLE SECTION

STANDARD MANHOLE DETAILS
N.T.S.

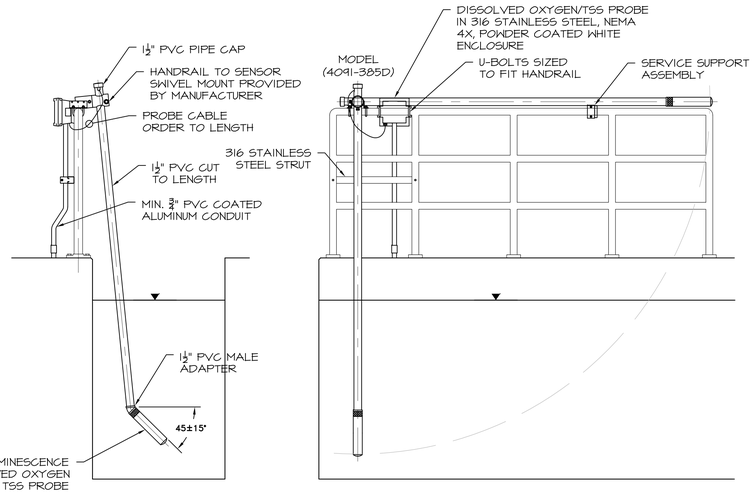

SECTION ELEVATION

NOTES
1. INSTALL TRANSMITTER TO MANUFACTURER'S SPECIFICATIONS AND REQUIREMENTS.
2. CONSULT MANUFACTURER'S INSTALLATION MANUAL FOR CORRECT PROBE INSERTION LENGTH.
3. USE 316 SST FITTINGS FOR ALL PROCESS CONNECTIONS.
4. ANCHOR SYSTEM SHALL BE HILTI HY 150 W 316SS MATERIALS.
5. ENSURE THE SENSOR CANNOT MAKE CONTACT WITH THE TANK WALL.
6. ENSURE THAT SENSOR IS FULLY IMMERSED AT ALL TIMES.

DISSOLVED OXYGEN/TSS PROBE DETAIL
N.T.S.



WALL ENGINEERING
223 N. WASHINGTON AVE. DURANT, OK 74701
OKLAHOMA CA #6413 EXP. JUNE 30, 2023

SUBMITTAL / REVISIONS:

DATE	BY	SUBMITTAL / REVISION
03/22	JR	ODEQ SUBMITTAL
06/22	JR	ISSUED FOR BIDDING

SHAWNEE MUNICIPAL AUTHORITY
WASTEWATER SYSTEM IMPROVEMENTS
CONTRACT DOCUMENTS VOL. 4 OF 6 - NORTHSIDE WWTP

MISCELLANEOUS DETAILS

PROJECT NO. SHN-20-01
DATE 06/22
DRAWN BY: JR
CHECKED BY: BW
REVIEWED BY: DBW
SCALE: AS NOTED

BAR IS ONE INCH ON ORIGINAL DRAWING
0" 1"
IF NOT ONE INCH ON THIS SHEET, ADJUST SCALES ACCORDINGLY

SHEET
DT-1

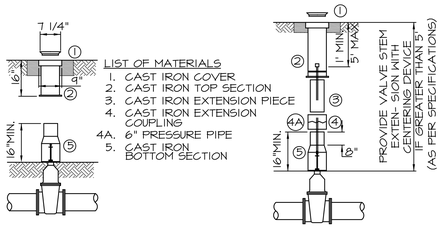

NOTES:

1. EXACT WORDING FOR VALVE DESCRIPTION PLATE SHALL BE DETERMINED BY THE ENGINEER PRIOR TO FABRICATION.
2. EXTENSION PIECE CAN BE CUT TO LENGTH REQUIRED.
3. PROVIDE 1'-6" X 1'-6" X 8" THICK CONCRETE AROUND TOP OF VALVE BOX UNLESS OTHERWISE NOTED OR OUTLINED ON SPECIFIC VALVE DETAILS.
4. SEE VALVE DETAILS/SPECS FOR ADDITIONAL VALVE DETAILS.

VALVE BOX INSTALLATION
N.T.S.

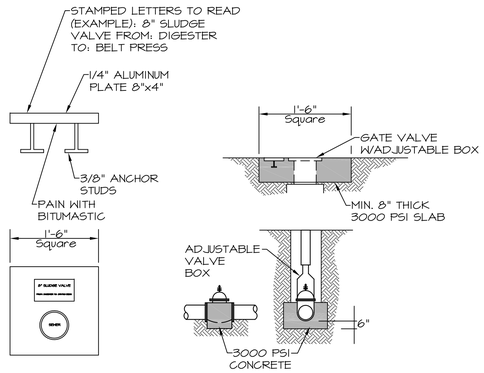

VALVE BLOCKING DETAIL
N.T.S.

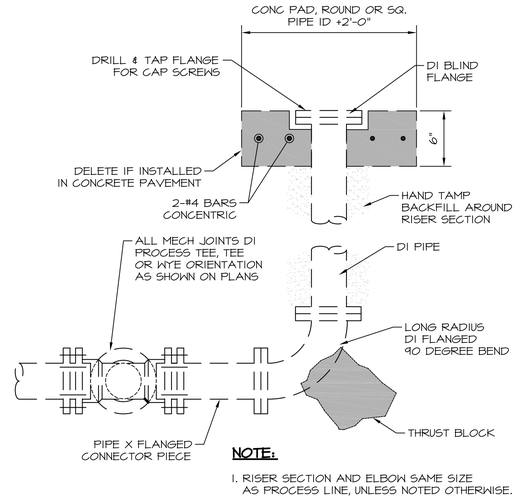

NOTE:

1. RISER SECTION AND ELBOW SAME SIZE AS PROCESS LINE, UNLESS NOTED OTHERWISE.

PROCESS LINE CLEAN-OUT SETTING
N.T.S.

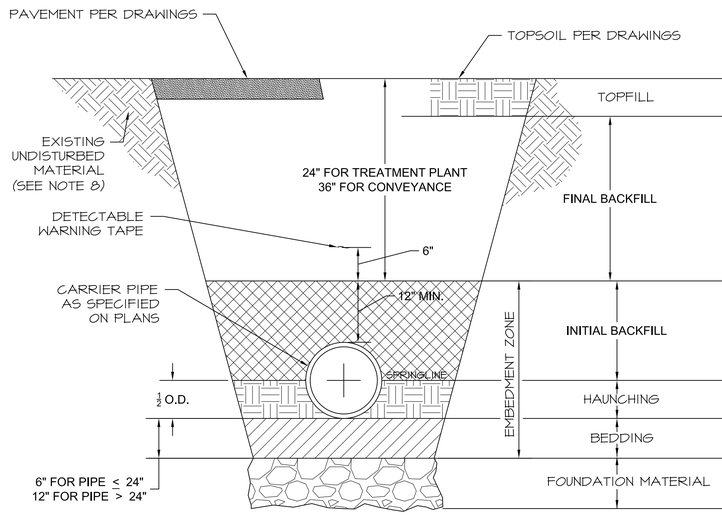

	BEDDING / BACKFILL REQUIREMENTS AND MATERIAL DESIGNATIONS (SEE MATERIAL DESCRIPTIONS)							
	GRAVITY MAINS		PRESSURE MAINS		UNDER PAVED AREAS		STREET CROSSINGS	
	DI / CONC.	HDPE / PVC	DI / CONC.	HDPE / PVC	DI / CONC.	HDPE / PVC	DI / CONC.	HDPE / PVC
TOPFILL	8	8	8	8	11	11	11	11
FINAL BACKFILL	13	13	13	13	10	10	10	10
INITIAL BACKFILL	12	1/2/7 *	12	12	1/2	1/2/7 *	1/2	1/2/7 *
HAUNCHING	2	1/2/7 *	2	1/2/7 *	2	1/2/7 *	2	1/2/7 *
BEDDING	2	2	2	2	2	2	2	2
FOUNDATION MATERIAL	CRUSHED ROCK OR RIP RAP (WHEN REQ'D)							

* LINES SMALLER THAN 18" SHALL BE #67 BEDDING.
LINES 18" AND LARGER SHALL BE #57 BEDDING.
SAND MAY BE SUBSTITUTED FOR PVC/HDPE LINES 8" & SMALLER.

MATERIAL DESCRIPTIONS
(SEE SPECIFICATION SECTION 31_23_24)

1. #57 CRUSHED ROCK
2. #67 CRUSHED ROCK
3. FINE CRUSHED ROCK
4. FLOWABLE FILL
5. SELECT BACKFILL MATERIAL
6. PEA GRAVEL
7. SAND
8. TOPSOIL (NO STONES OR ROCKS)
9. SELECT FILL
10. AGGREGATE BASE OR CONTROLLED LOW STRENGTH MATERIAL
11. PAVEMENT MATCHING OR AS SPECIFIED IN DRAWINGS
12. SELECT EXCAVATED MATERIAL (NO STONES LARGER THAN 1")
13. SELECT EXCAVATION MATERIAL (NO STONES LARGER THAN 4")

EMBEDDMENT DETAIL NOTES

1. MINIMUM TRENCH WIDTH AT SPRINGLINE OF PIPE
   a. PIPES < 4" 18"
   b. PIPES 6" - 18" 12" + O.D.
   c. PIPES > 20" 24" + O.D.
2. EXCAVATION MAY BE WIDENED ABOVE THE EMBEDMENT ZONE AT THE CONTRACTOR'S OPTION AND EXPENSE.
3. EMBEDMENT / BACKFILL LIFT THICKNESS (MAXIMUM)
   a. FINAL BACKFILL 12" LIFTS TYPICAL; 6" LIFTS UNDER PAVING / STRUCTURES
   b. INITIAL BACKFILL 6" LIFTS
   c. HAUNCHING 4" LIFTS
   d. BEDDING 4" LIFTS
4. TRENCH SLOPE, SHORING, BENCHING, ETC TO BE DETERMINED BY THE CONTRACTOR. CONTRACTOR IS SOLELY RESPONSIBLE FOR TRENCH SAFETY AND OSHA COMPLIANCE.
5. EXCAVATION FOR BELL HOLE REQUIRED FOR ALL PIPING <4". CONTRACTOR SHALL SELECT AND UTILIZE CONSTRUCTION METHODS SUCH THAT ALL AREAS UNDER THE PIPE HAUNCHES ARE FILLED WITH THE APPROPRIATE MATERIAL AND COMPACTED.
6. ALL MATERIALS UNDER PAVING / STRUCTURES SHALL BE COMPACTED TO 95% MODIFIED PROCTOR DENSITY AT 4% OPTIMUM MOISTURE CONTENT BY SHEEPSFOOT OR OTHER SUTIABLE MECHANICAL COMPACTION METHODS AT SPECIFIED LIFT THICKNESSES. COMPACTION EQUIPMENT MUST NOT COME IN CONTACT WITH CARRIER PIPE NOR CASING PIPE.
7. IF TRENCH BOTTOM IS OVER-EXCAVATED BELOW INTENDED GRADE, FILL THE OVER-EXCAVATION WITH EMBEDMENT MATERIAL AND COMPACT AT THE DENSITY SPECIFIED FOR THE EMBEDMENT MATERIAL.
8. THE EXISTING NATIVE MATERIAL WITHIN THE LIMITS OF THE EMBEDMENT ZONE IS TO REMAIN UNDISTURBED OR REPLACED WITH SPECIFIED PIPE EMBEDMENT MATERIAL IF OVER-EXCAVATION TAKES PLACE. REPLACEMENT WITH ONSITE MATERIAL WILL NOT BE ACCEPTABLE.
9. IF BEDDING DETAIL CONFLICTS WITH ANY OTHER DETAIL THE MORE STRINGENT SHALL APPLY.

UTILITY BEDDING DETAIL
N.T.S.



WALL ENGINEERING
223 N. WASHINGTON AVE. DURANT, OK 74701
OKLAHOMA CA #5413 EXP. JUNE 30, 2023

SUBMITTAL / REVISIONS:

DATE	BY	SUBMITTAL / REVISION
03/22	JR	ODEQ SUBMITTAL
06/22	JR	ISSUED FOR BIDDING

SHAWNEE MUNICIPAL AUTHORITY
WASTEWATER SYSTEM IMPROVEMENTS
CONTRACT DOCUMENTS VOL. 4 OF 6 - NORTHSIDE WWTP

MISCELLANEOUS DETAILS DETAILS

PROJECT NO. SHN-20-01
DATE 06/22
DRAWN BY: JR
CHECKED BY: TA
REVIEWED BY: DBW
SCALE: AS NOTED

BAR IS ONE INCH ON ORIGINAL DRAWING
0" 1"
IF NOT ONE INCH ON THIS SHEET, ADJUST SCALES ACCORDINGLY

SHEET
DT-2

TYPICAL JOINT DETAILS

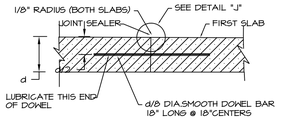

DOWELED CONSTRUCTION JOINT
N.T.S.

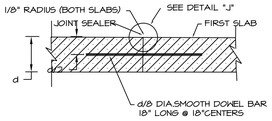

TIED CONSTRUCTION JOINT
N.T.S.

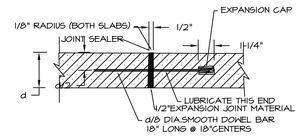

DOWELED EXPANSION JOINT
N.T.S.

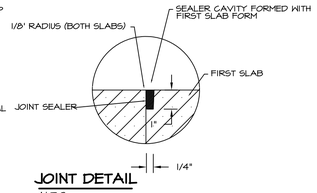

JOINT DETAIL
N.T.S.

JOINT CROSS SECTIONS

CONSTRUCTION JOINT – LONGITUDINAL OR TRANSVERSE
CREATED LONGITUDINALLY BY THE EDGES OF PAVING LANES OR TRANSVERSELY BY THE END OF A DAY'S WORK.

(ALTERNATE)

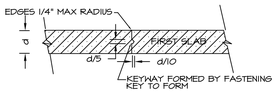

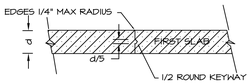

CONTROL JOINT –
LONGITUDINAL OR TRANSVERSE
LONGITUDINAL CONTROL JOINT: SAWED, HAND-FORMED, OR PREMOLDED FILLER
TRANSVERSE CONTROL JOINT: SAWED, HAND-FORMED, OR PREMOLDED FILLER

ISOLATION JOINT

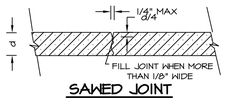

SAWED JOINT
N.T.S.

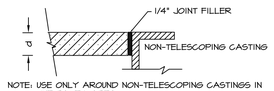

NOTE: USE ONLY AROUND NON-TELESCOPING CASTINGS IN THE PAVED AREA

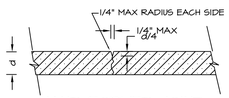

HAND-FORMED JOINT
N.T.S.

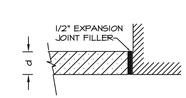

NOTE: USE ONLY AT BUILDINGS OR OBJECTS ABUTTING THE PAVED AREA

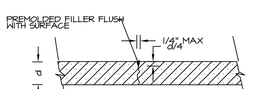

PREMOLDED FILLER JOINT
N.T.S.

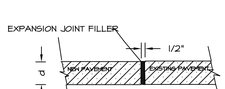

NOTE: USE ONLY AT JUNCTION OF NEW AND EXISTING PAVEMENT. THICKEN SLAB WHENEVER PRACTICAL.

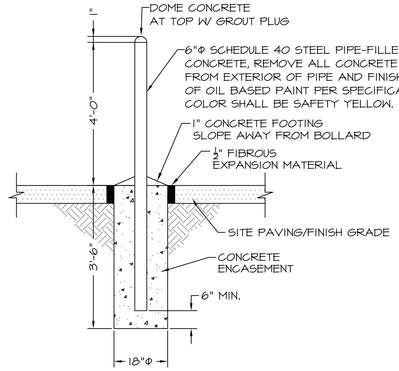

BOLLARD DETAIL
N.T.S.

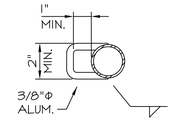

ALUM. LATCH RING
N.T.S.

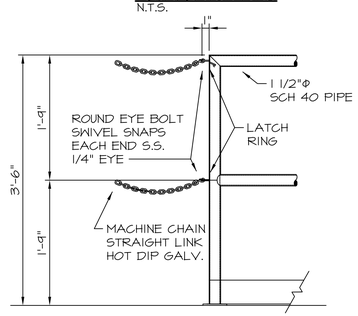

TYP. SAFETY CHAIN
N.T.S.

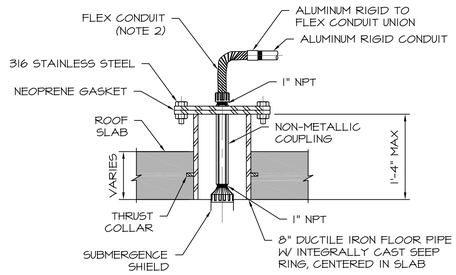

NOTES
1. COAT FLOOR PIPE W/ SPECIFIED PAINT SYSTEM PRIOR TO CONCRETE PLACEMENT.
2. FLEXIBLE CONDUIT SHALL BE SIZED FOR REMOVAL OF LEVEL ELEMENT.

ULTRASONIC LEVEL INSTALLATION - CONCRETE
N.T.S.

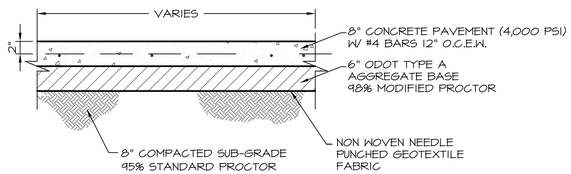

NEW CONCRETE PAVING SECTION
N.T.S.

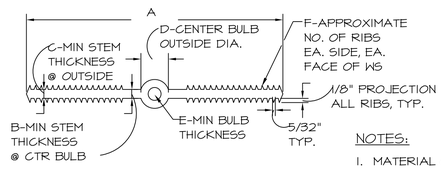

SIZE	A	B	C	D	E	F
4"x3/16"	4"	3/16"	3/16"	3/4"	1/4"	4
6"x3/8"	6"	3/8"	3/8"	7/8"	1/4"	6
9"x3/8"	9"	3/8"	3/8"	1"	1/4"	8

NOTES:
1. MATERIAL QUALITY PER SPECIFICATIONS.
2. DIM REQUIREMENTS INDICATED SHOULD BE GIVEN TO SUPPLIERS PRIOR TO PLACING ORDERS.
3. NON-ROUND CENTER BULBS SHALL HAVE A MIN. OUTSIDE DIM. OF 'D'.

PLASTIC WATERSTOP
N.T.S.

NOTE:
1. COAT WALL PIPE WITH SPECIFIED PAINT SYSTEM PRIOR TO CONCRETE PLACEMENT.
2. TYPICAL FOR ALL PIPE PENETRATIONS THROUGH CONCRETE WALLS, REGARDLESS OF BEING SHOWN ON DRAWINGS OR NOT.

N.T.S.

WALL PIPE



WALL ENGINEERING
223 N. WASHINGTON AVE. DURANT, OK 74701
OKLAHOMA CA #5413 EXP. JUNE 30, 2023

SUBMITTAL / REVISIONS:

DATE	BY	SUBMITTAL / REVISION
03/22	JR	ODEQ SUBMITTAL
06/22	JR	ISSUED FOR BIDDING

SHAWNEE MUNICIPAL AUTHORITY
WASTEWATER SYSTEM IMPROVEMENTS
CONTRACT DOCUMENTS VOL. 4 OF 6 - NORTHSIDE WWTP

MISCELLANEOUS DETAILS

PROJECT NO. SHN-20-01
DATE 06/22
DRAWN BY: JR
CHECKED BY: TA
REVIEWED BY: DBW
SCALE: AS NOTED

BAR IS ONE INCH ON ORIGINAL DRAWING
0" 1"
IF NOT ONE INCH ON THIS SHEET, ADJUST SCALES ACCORDINGLY

SHEET
DT-3

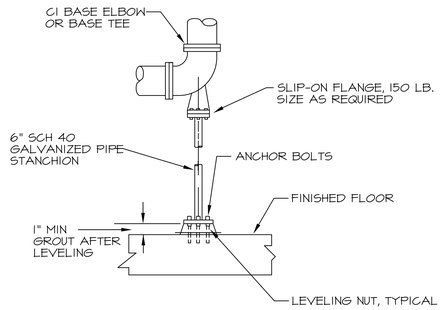

BASE FITTING PIPE SUPPORT
N.T.S.

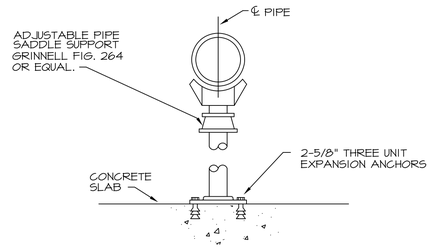

TYPICAL PIPE SUPPORT DETAIL
N.T.S.

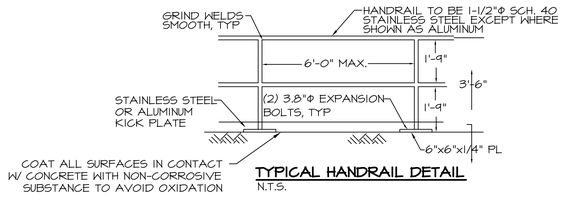

TYPICAL HANDRAIL DETAIL
N.T.S.

PIPE SPAN AND SUPPORT ROD SIZE			
MAXIMUM PIPE SPAN (FEET)			
STEEL	COPPER	PLASTIC SEE NOTE A1	DUCTILE IRON SEE NOTE A2
5	5	CONTINUOUS	-
5	5	5	-
5	5	5	-
5	5	5	-
10	5	5	
10	10	5	
10	20	5	
10	20	5	
15	20	5	
15	20	5	
20	-	5	
20	-	10	
20	-	-	
25	-	-	
25	-	-	
25	-	-	
30	-	-	
30	-	-	

12 FEET FOR PRESSURE PIPE

10 FEET FOR SOIL PIPE

NOTES:

A1. SPAN SHOWN IS FOR SCHEDULE 80 PVC PIPE AT 100° F. SPANS FOR OTHER PLASTICS, OTHER PVC PIPE SCHEDULES AND PIPES AT HIGHER TEMPERATURES SHALL BE SHORTENED IN ACCORDANCE WITH THE PIPE MANUFACTURER'S RECOMMENDATIONS. "CONTINUOUS" MEANS PIPE SHALL BE IN UNISTRUT POWER -STRUT OR SIMILAR CHANNEL.

A2. PROVIDE A MINIMUM OF ONE PIPE HANGER PER PIPE LENGTH, WITHIN 4-INCHES OF THE BELL.

A3. HANGERS AND SUPPORTS SHALL BE STAINLESS STEEL. NUT, BOLTS, WASHERS AND ALL EMBEDDED ITEMS SHALL BE TYPE 316 STAINLESS STEEL UNLESS OTHERWISE IN CONTACT WITH NON-COMPATIBLE MATERIAL.

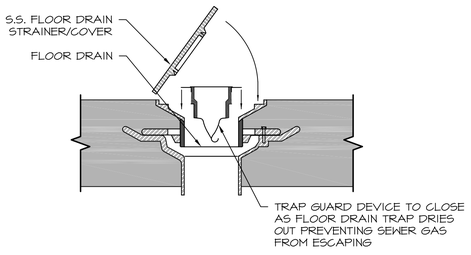

FLOOR DRAIN TRAP GUARD
N.T.S.

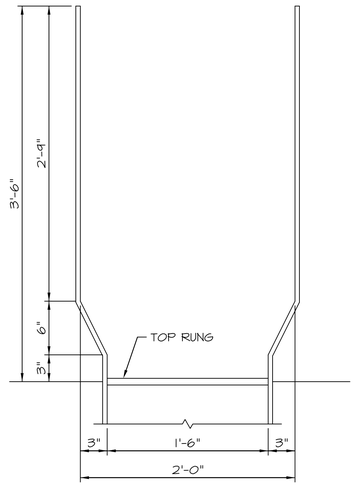

LADDER WALKWAY EXTENSION
N.T.S

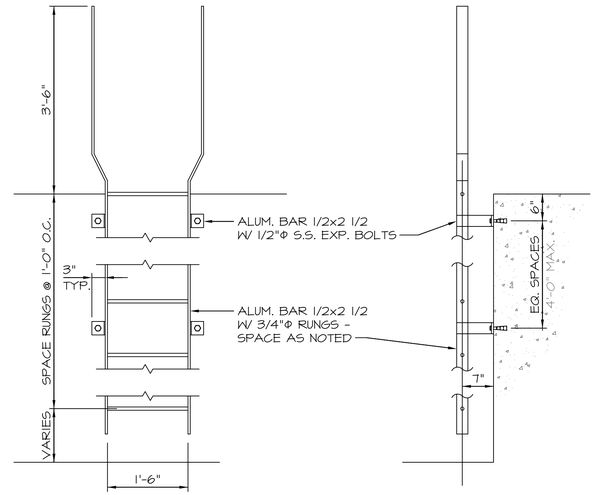

ALUMINUM LADDER DETAIL
N.T.S

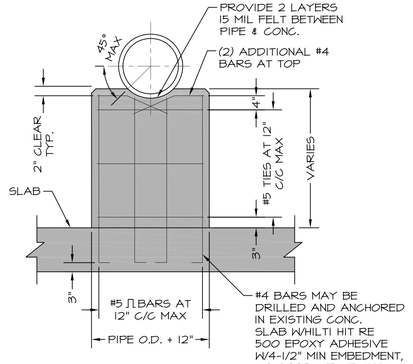

TYPICAL INTERIOR PIPE SUPPORT
N.T.S.

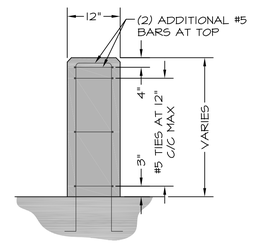

TYPICAL SECTION THROUGH CONCRETE PEDESTAL FOR PIPE SUPPORTS
N.T.S.



NON-POTABLE WARNING SIGN
N.T.S.

NOTES:

1. SIGN SHALL BE 3/8" THICK PLASTIC RESISTANT TO SUNLIGHT (ULTRAVIOLET) DETERIORATION.
2. COLORS:
   LETTERS - WHITE
   FAUCET AND GLASS - YELLOW OR WHITE
   ⊘ WARNING SYMBOL- RED
   BACKGROUND - DARK PURPLE
   OUTER BODER - WHITE
   INNER BORDER - WHITE
3. NON-POTABLE WARNING SIGNS SHALL BE POSTED AT ALL NON-POTABLE POST HYDRANTS, YARD HYDRANTS AND HOSE BIBS.

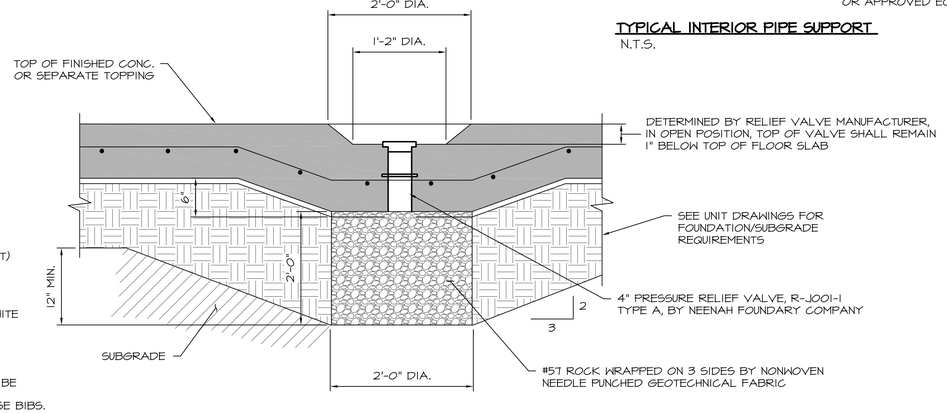

PRESSURE RELIEF VALVE
N.T.S.

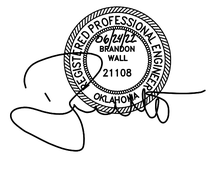

WALL ENGINEERING
223 N. WASHINGTON AVE. DURANT, OK 74701
OKLAHOMA CA #6413 EXP. JUNE 30, 2023

SUBMITTAL / REVISIONS:

DATE	BY	SUBMITTAL / REVISION
03/22	JR	ODEQ SUBMITTAL
06/22	JR	ISSUED FOR BIDDING

SHAWNEE MUNICIPAL AUTHORITY
WASTEWATER SYSTEM IMPROVEMENTS
CONTRACT DOCUMENTS VOL. 4 OF 6 - NORTHSIDE WWTP

MISCELLANEOUS DETAILS

PROJECT NO.	SHN-20-01
DATE	06/22
DRAWN BY:	JR
CHECKED BY:	TA
REVIEWED BY:	DBW
SCALE:	AS NOTED

BAR IS ONE INCH ON ORIGINAL DRAWING
0" 1"
IF NOT ONE INCH ON THIS SHEET, ADJUST SCALES ACCORDINGLY

SHEET

DT-4

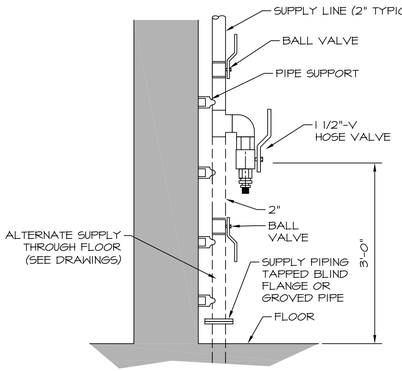

NOTE:

1. ROTATE HOSE VALVE 30° OFF WALL.
2. SUPPLY WALL MOUNTED HOSE RACKETS ADJACENT AT ALL HOSE VALVES.
3. PROVIDE WARNING SIGN PER DETAIL SHEETS
4. CONTRACTOR SHALL PROVIDE A $\frac{3}{4}$" AND 1-$\frac{1}{2}$" THREADED OUTLET WITH CAMLOK QUICK DISCONNECT ADAPTERS AND VALVE ON EACH YARD HYDRANT IN ADDITION TO THE 2" HYDRANT VALVE. YARD HYDRANT SHALL BE Z1340 SERIED OR APPROVED EQUAL.

INTERIOR HOSE VALVE DETAIL
N.T.S

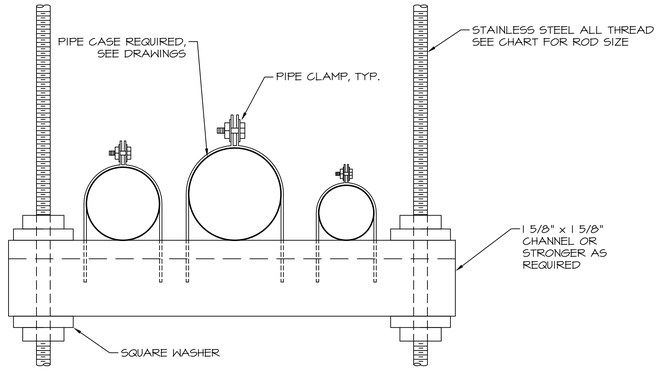

TRAPEZE PIPE SUPPORT
N.T.S

ALL THREAD MINIMUM SUPPORT ROD SIZE							
PIPE SIZE	≤ 6"	8"	10"-12"	14"	16"-18"	20"	24"
ALL-THREAD SIZE	3/8"	1/2"	5/8"	3/4"	7/8"	1"	1-1/4"

STEEL AND DUCTILE IRON SUPPORT SPACING (MAX.)							
PIPE SIZE	≤ 1"	1$\frac{1}{4}$" - 2 $\frac{1}{2}$"	3"-4"	6"-8"	10"-12"	14"-18"	20"-24"
SPACING (FEET)	6	8	10	12	14	16	18

STAINLESS STEEL SUPPORT SPACING				
PIPE SIZE	1"-6"	8"-12"	14"-16"	18"-24"
SPACING (FEET)	8	10	12	14

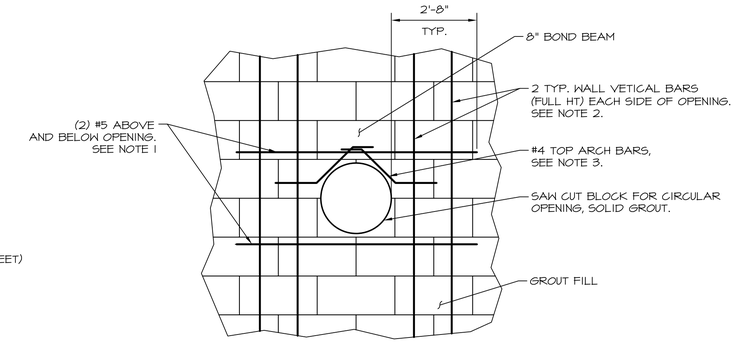

CMU PIPE OPENING REINFORCEMENT
N.T.S

NOTES:

1. AT ADJACENT OPENING WITH LESS THAN 8'-0" WALL BETWEEN, CONTINUE HORIZONTAL REINFORCING TO 2'-8" BEYOND FURTHEST OPENING.
2. LOCATE VERTICAL BARS CENTERED IN 2 ADJACENT CELLS IN 8" WALLS AND EACH FACE IN SINGLE CELL IN 12" WALLS. LAP 48 BAR DIAMETERS WITH MATCHING FOUNDATION DOWELS.
3. LOCATE #4 ARCH BARS CENTERES IN 8" WALLS, AND EACH FACE IN 12" WALLS.

NOTES:

1. NUMBER OF ADDITIONAL REINF. BARS AT EACH SIDE OF OPENING SHALL EQUAL HALF THE NUMBER OF INTERRUPTED BARS IN EACH LAYER OF REINF.
2. SIZE OF ADDITIONAL REINF. BARS TO EQUAL SIZE OF INTERRUPTED REINF. BARS.
3. PROVIDE STD HOOKS FOR BARS IF LAP LENGTH EXTENSION CANNOT BE OBTAINED AT JOINTS OR OTHER OBSTRUCTIONS. PLACE ADDITIONAL BARS IN SAME PLANES AS INTERRUPTED REINF.
4. UNLESS NOTED OTHERWISE, SIZE OF DIAGONAL BARS SHALL BE THE SAME SIZE AS THE INTERRUPTED NORMAL REINF. LOCATE DIAGONALS IN EACH LAYER OF REINF.
5. PLACE DIAGONAL BARS INSIDE NORMAL REINF
6. PROVIDE 2 DIAGONAL BARS EACH LAYER OR FACE, EACH WAY AS SHOWN.
7. ALL REINF. TO CLEAR OPENING OR FLANGE COLLARS BY 2".

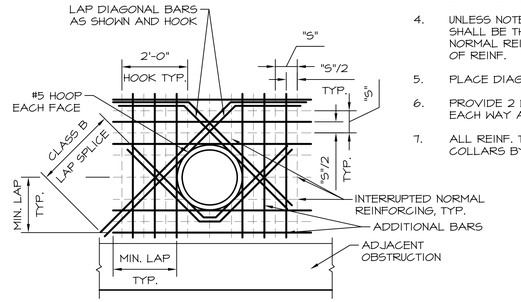

ADDITIONAL REINFORCEMENT @ OPENINGS IN WALLS
N.T.S

WALL MOUNTED UTILITY STATION
N.T.S

NOTES:

1. ALL CORNERS SHALL HAVE A 3/4" RADIUS
2. HOSE RACKS TO BE PLACED AT ALL HYDRANTS ADJACENT TO BUILDING/STRUCTURES.
3. LOCATION TO BE FIELD DETERMINED.

HOSE RACK
N.T.S

NOTES

1. INSTALL RPZ WITH MANUFACTURER'S AIR GAP AND ROUTE FULL-SIZE TO JUNCTION BOX (SEE BFP-7).
2. RPZ SHALL BE SERIES 009 MANUFACTURED BY WATTS
3. INSTALL PIPE STANDS TO SUPPORT THE COMPONENTS. DO NOT SUPPORT ASSEMBLIES FROM PIPING. INSTALL BEARING PLATES ON CONCRETE FLOOR UNDER EACH SUPPORT.
4. ALL COMPONENTS TO BE CORROSION RESISTANT.
5. DRAIN MAY NOT BE OUTLINED ON DRAWINGS FOR CLARITY. FIELD ROUTE TO DRAIN.

RPZ DOMESTIC WATER RISER (INTERIOR)
N.T.S.

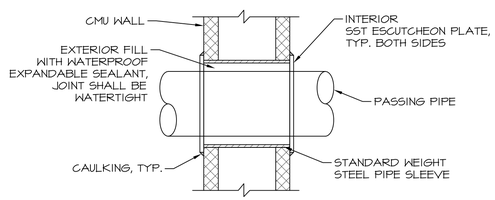

CMU WALL PIPE PENETRATION
N.T.S



WALL ENGINEERING
223 N. WASHINGTON AVE. DURANT, OK 74701
OKLAHOMA CA #5413 EXP. JUNE 30, 2023

SUBMITTAL / REVISIONS:

DATE	BY	SUBMITTAL / REVISION
03/22	JR	ODEQ SUBMITTAL
06/22	JR	ISSUED FOR BIDDING

SHAWNEE MUNICIPAL AUTHORITY
WASTEWATER SYSTEM IMPROVEMENTS
CONTRACT DOCUMENTS VOL. 4 OF 6 - NORTHSIDE WWTP

MISCELLANEOUS DETAILS

PROJECT NO. SHN-20-01
DATE 06/22
DRAWN BY: JR
CHECKED BY: TA
REVIEWED BY: DBW
SCALE: AS NOTED

BAR IS ONE INCH ON ORIGINAL DRAWING
0" 1"
IF NOT ONE INCH ON THIS SHEET, ADJUST SCALES ACCORDINGLY

SHEET
DT-5

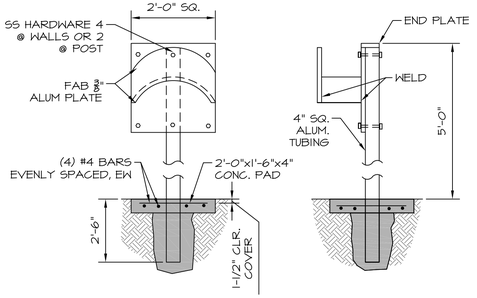

SELF SUPPORTED HOSE RACK

N.T.S

NOTES:

1. PROVIDE HOSE RACK AT WALL & YARD HYDRANTS UNLESS A HOSE REEL OR WALL MOUNTED UTILITY STATION IS INDICATED ON THE DRAWINGS.
2. LESS POST & CONC. FOR WALL MT INSTALLATION
3. MATERIALS TO BE ALUMINUM OR OTHER CORROSION RESISTANT MATERIAL AS APPROVED BY ENGINEER

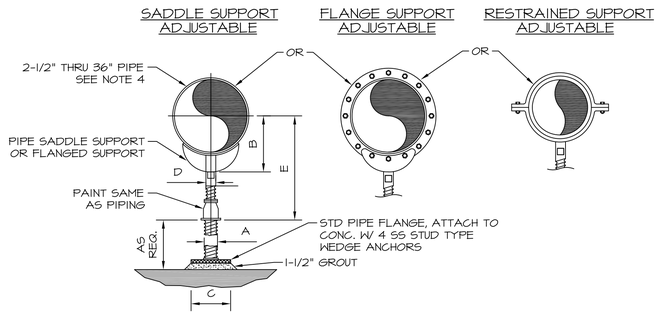

ADJUSTABLE FLOOR MOUNTED PIPE SUPPORT

N.T.S

NOTES:

1. PROVIDE HALF ROUND RIGID INSULATION & INSULATION PROTECTION SHIELD WHERE PIPING IS INSULATED
2. PROVIDE NEOPRENE WAFFLE INSULATION PAD, SIMILAR TO MASON TYPE "W" OR KORFUND 40, UNDER SUPPORT FOOT WHEN PIPING IS ISOLATED OR SUPPORT IS ADJACENT TO MECHANICAL EQUIUPMENT.
3. FOR BASE, HEIGHT & FLANGE DIMENSIONS, SEE TABLE.

DIMENSION TABLE

PIPE SIZE	A	B	C	D	E MIN	E MAX
2-1/2"	2-1/2"	3-1/2"	9"	1-1/2"	8"	13"
3"	2-1/2"	3-3/4"	9"	1-1/2"	8-1/4"	1'-1 1/4"
3-1/2"	2-1/2"	4"	9"	1-1/2"	8-1/2"	13-1/2"
4"	3"	4-1/4"	9"	2-1/2"	9-1/4"	14"
5"	3"	4-7/8"	9"	2-1/2"	10"	14-3/4"
6"	3"	5-1/2"	9"	2-1/2"	10-1/2"	15-1/4"
8"	3"	6-7/8"	9"	2-1/2"	11-3/4"	15-1/2"
10"	3"	8-1/2"	9"	2-1/2"	13-1/2"	18-1/4"
12"	3"	9-15/16"	9"	2-1/2"	15"	19-3/4"
14"	4"	10-15/16"	11"	3"	16-1/4"	20-3/4"
16"	4"	12-3/8"	11"	3"	17-3/4"	22-1/4"
18"	6"	13-7/8"	13-1/2"	3-1/2"	19-1/2"	24"
20"	6"	15-3/8"	13-1/2"	3-1/2"	21"	25-1/2"
24"	6"	17-15/16"	13-1/2"	4"	23-3/4"	28-1/4"
30"	6"	21-5/16"	13-1/2"	4"	27"	31-1/2"
32"	6"	22-1/2"	13-1/2"	4"	28-1/4"	32-3/4"
36"	6"	24-1/2"	13-1/2"	4"	30-1/4"	34-3/4"

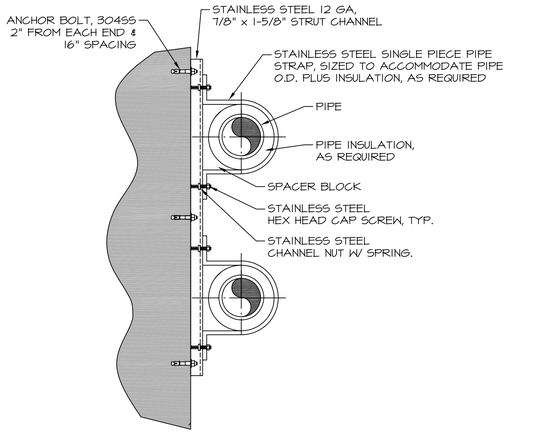

STAINLESS STEEL STRUT CHANNEL PIPE SUPPORT

N.T.S

CHAIN LINK FENCE

N.T.S.

SINGLE GATE

N.T.S.

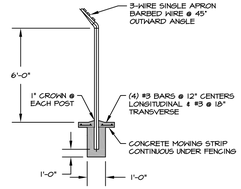

FENCE POST

N.T.S.

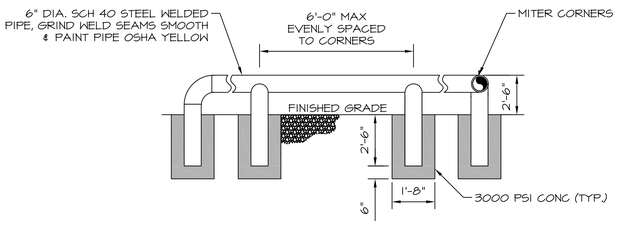

GUARD RAIL DETAIL

N.T.S

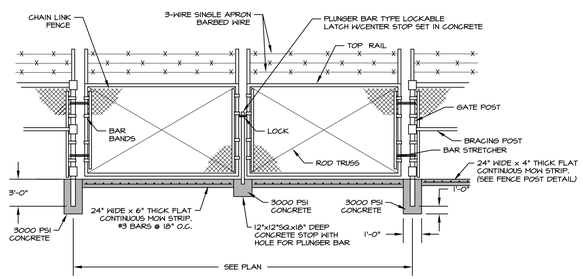

DOUBLE SWING GATE

N.T.S.

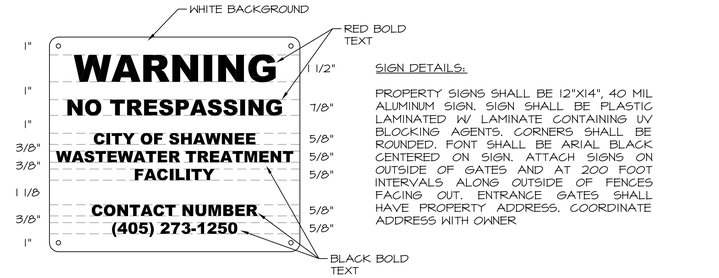

TYPICAL PERMANENT WARNING SIGN

N.T.S.

SIGN DETAILS:

PROPERTY SIGNS SHALL BE 12"X14", 40 MIL ALUMINUM SIGN. SIGN SHALL BE PLASTIC LAMINATED W/ LAMINATE CONTAINING UV BLOCKING AGENTS. CORNERS SHALL BE ROUNDED. FONT SHALL BE ARIAL BLACK CENTERED ON SIGN. ATTACH SIGNS ON OUTSIDE OF GATES AND AT 200 FOOT INTERVALS ALONG OUTSIDE OF FENCES FACING OUT. ENTRANCE GATES SHALL HAVE PROPERTY ADDRESS. COORDINATE ADDRESS WITH OWNER



WALL ENGINEERING
223 N. WASHINGTON AVE. DURANT, OK 74701
OKLAHOMA CA #6413 EXP. JUNE 30, 2023

SUBMITTAL / REVISIONS:

DATE	BY	SUBMITTAL / REVISION
03/22	JR	ODEQ SUBMITTAL
06/22	JR	ISSUED FOR BIDDING

SHAWNEE MUNICIPAL AUTHORITY
WASTEWATER SYSTEM IMPROVEMENTS
CONTRACT DOCUMENTS VOL. 4 OF 6 - NORTHSIDE WWTP

MISCELLANEOUS DETAILS

PROJECT NO. SHN-20-01
DATE 06/22
DRAWN BY: JR
CHECKED BY: TA
REVIEWED BY: DBW
SCALE: AS NOTED

BAR IS ONE INCH ON ORIGINAL DRAWING
0" 1"
IF NOT ONE INCH ON THIS SHEET, ADJUST SCALES ACCORDINGLY

SHEET
DT-6

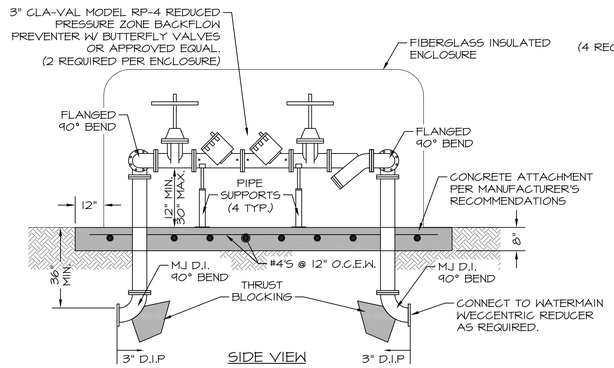

SIDE VIEW

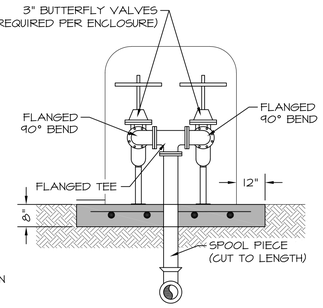

END VIEW

MINIMUM RESTRAINED LENGTH (FT) FOR A TEST PRESSURE OF 100 PSIG

NOMINAL PIPE SIZE	90 DEGREE	WYE OR 45 DEGREE	22-1/2 DEGREE	11-1/4 DEGREE	TEE BRANCH	TERMINAL PLUG
6	23	18	18	18	39	59
8	30	18	18	18	51	6'-4"
10	36	18	18	18	61	92
12	41	18	18	18	71	107
20	62	26	18	18	110	164
24	72	30	18	18	128	192
30	85	35	18	18	152	228
36	96	40	18	18	175	262
48	118	48	23	18	214	322
54	131	54	26	18	348	344

NOTES:

1. RESTRAIN ALL DUCTILE IRON FITTINGS.
2. TABULATED VALUES ARE FOR 100 PSIG TEST PRESSURE. FOR VALUES AT PRESSURES OTHER THAN 100 PSID, MULTIPLY TABLE VALUES BY THE RATIO OF ACTUAL TEST PRESSURE TO 100 PSIG. TEST PRESSURES FOR EACH SERVICE ARE DEFINED IN THE PIPING SCHEDULE.
3. WHERE LISTED VALUES, OR CALCULATED VALUES (SEE ABOVE), ARE LESS THAN ON STANDARD FULL PIPE SEGMENT (18 FEET), RESTRAIN THE FITTING ONLY.
4. RESTRAINT LENGTHS APPLY TO PIPE RUNS ON EACH SIDE OF A CHANGE IN DIRECTION.
5. WHERE THE PIPING LAYOUT HAS RESTRAINED JOINT LENGTHS FOR TWO OR MORE FITTINGS TO OVERLAP, THRUST RESTRAIN ALL PIPING BETWEEN THE OTHER FITTINGS, ASSUME 1/2 OF THE RESTRAINED PIPE LENGTH BETWEEN THE TWO FITTINGS RESTRAINS EACH OF THE FITTINGS AND ADD ADDITIONAL RESTRAINED JOINT LENGTH TO THE OUTER LEGS OF THE OUTER FITTINGS TO EQUAL THE TOTAL REQUIRED FOR ALL FITTINGS.
6. THRUST RESTRAINT TABLE REFERS TO NEW PIPING.

BACKFLOW PREVENTER

N.T.S

NOTES:

1. INSTALL INSIDE INSULATED FIBERGLASS ENCLOSURE, SUBMITTAL REQUIRED.

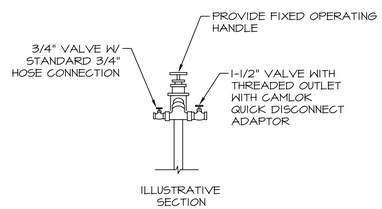

HOSE BIB-NON POTABLE

N.T.S

NOTES:

1. ALL HYDRANTS SHALL BE PROVIDED W/ HOSE RACK.
2. SIGN IS ROTATED FOR CLARITY, ORIENTATION SHALL BE VISIBLE FROM FRONT OF HYDRANT.
3. CONTRACTOR SHALL PROVIDE A 3/4" AND 1-1/2" THREADED OUTLET WITH CAMLOK QUICK DISCONNECT ADAPTERS AND VALVE ON EACH YARD HYDRANT IN ADDITION TO THE 2" HYDRANT VALVE. YARD HYDRANT SHALL BE ZURN Z1390 SERIED OR APPROVED EQUAL.
4. YARD HYDRANTS LOCATED NEXT TO STRUCTURES SHALL BE SECURELY MOUNTED TO THE STRUCTURES WITH STAINLESS STEEL FASTENERS.
5. YARD HYDRANTS SHALL BE PROVIDED WITH WHEEL TYPE HANDLE.
6. PROVIDE CASING GUARD AROUND YARD HYDRANT ABOVE GRADE SURFACE.
7. HYDRANT SHALL BE DESIGNATED WITH A "NON-POTABLE WATER" SIGN. SEE DETAIL SHEETS.

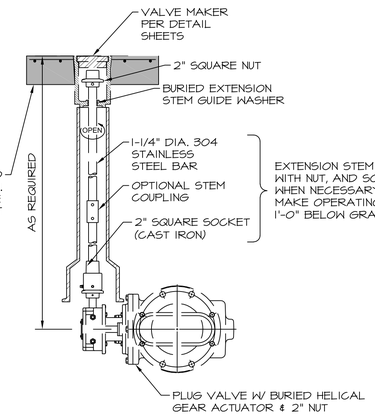

BURIED MANUAL PLUG VALVE

N.T.S

BURIED DUCTILE IRON PIPE THRUST RESTRAINT TABLE

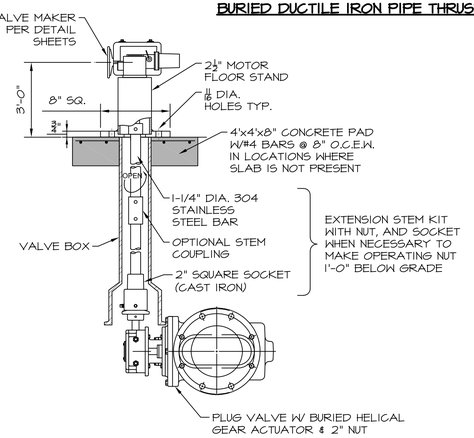

BURIED ELECTRICALLY ACTUATED PLUG VALVE

N.T.S

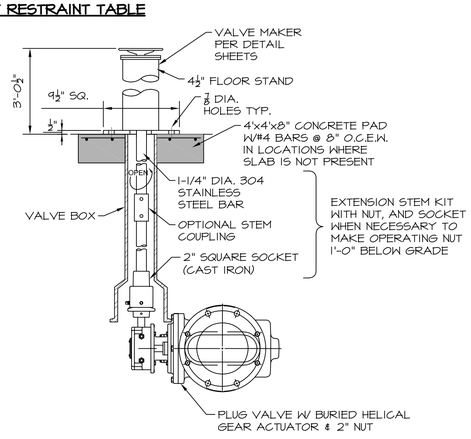

BURIED VALVE WITH PEDESTAL MOUNTED OPERATOR

N.T.S

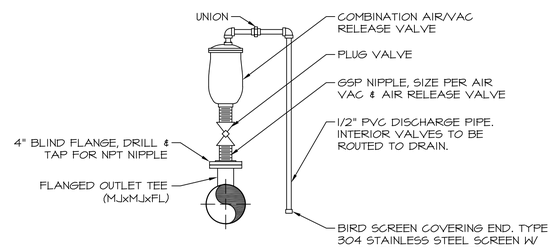

AIR VACUUM & RELEASE VALVE (3" & SMALLER)

N.T.S

NOTES:

1. VALVE SIZE SHALL BE AS INDICATED ON THE DRAWINGS.
2. SERVICE TAP & PLUG VALVE SHALL MATCH VALVE INLET SIZE.
3. FIELD ROUTE DISCHARGE PIPE TO DRAIN/DAYLIGHT.



WALL ENGINEERING
223 N. WASHINGTON AVE. DURANT, OK 74701
OKLAHOMA CA #6413 EXP. JUNE 30, 2023

SUBMITTAL / REVISIONS:

DATE	BY	SUBMITTAL / REVISION
03/22	JR	ODEQ SUBMITTAL
06/22	JR	ISSUED FOR BIDDING

SHAWNEE MUNICIPAL AUTHORITY
WASTEWATER SYSTEM IMPROVEMENTS
CONTRACT DOCUMENTS VOL. 4 OF 6 - NORTHSIDE WWTP

MISCELLANEOUS DETAILS

PROJECT NO. SHN-20-01
DATE 06/22
DRAWN BY: JR
CHECKED BY: TA
REVIEWED BY: DBW
SCALE: AS NOTED

BAR IS ONE INCH ON ORIGINAL DRAWING
0" 1"
IF NOT ONE INCH ON THIS SHEET, ADJUST SCALES ACCORDINGLY

SHEET

DT-7

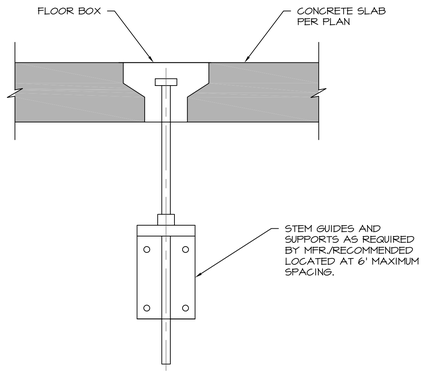

VALVE NUT INSTALLATION
N.T.S.

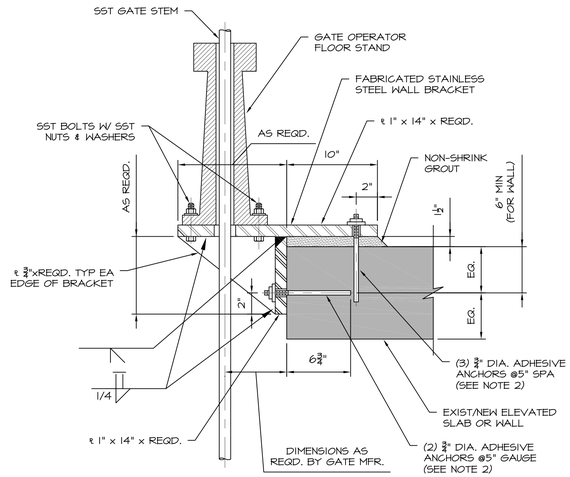

NOTES
1. VERTICAL ANCHORS ARE STAGGERED FROM HORIZONTAL ANCHORS.
2. VERIFY FLOOR STAND REQUIREMENTS, GATE STEM LOCATION, AND SLAB THICKNESS PRIOR TO FABRICATION, ADJUST AS REQUIRED.

GATE FLOOR STAND
N.T.S.

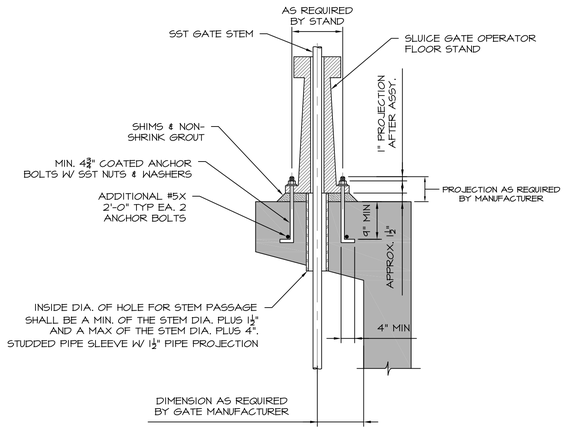

NOTES
1. FLOOR STAND IS REPRESENTATIVE ONLY.

GATE FLOOR STAND INSTALLATION
N.T.S.

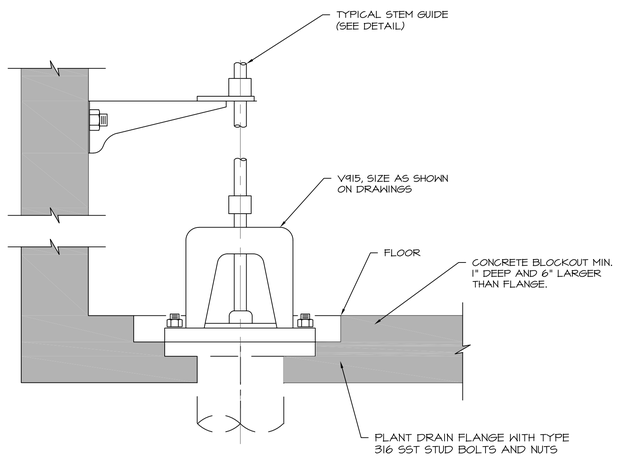

MUD VALVE
N.T.S.

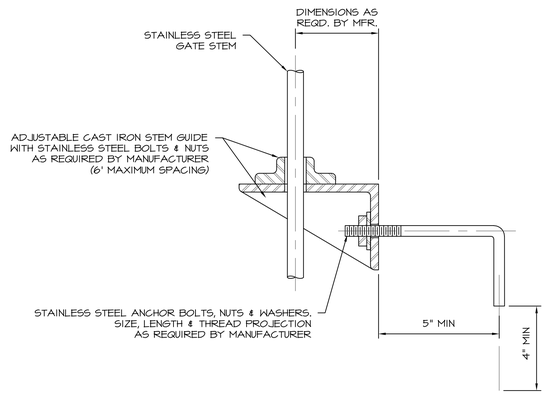

STEM GUIDE (GATES/MUD VALVES)
N.T.S.

WALL ENGINEERING
223 N. WASHINGTON AVE. DURANT, OK 74701
OKLAHOMA CA #6413 EXP. JUNE 30, 2023

SUBMITTAL / REVISIONS:

DATE	BY	SUBMITTAL / REVISION
03/22	JR	ODEQ SUBMITTAL
06/22	JR	ISSUED FOR BIDDING

SHAWNEE MUNICIPAL AUTHORITY
WASTEWATER SYSTEM IMPROVEMENTS
CONTRACT DOCUMENTS VOL. 4 OF 6 - NORTHSIDE WWTP

MISCELLANEOUS DETAILS

PROJECT NO.
SHN-20-01
DATE
06/22
DRAWN BY:
JR
CHECKED BY:
TA
REVIEWED BY:
DBW
SCALE:
AS NOTED

BAR IS ONE INCH ON ORIGINAL DRAWING
0" 1"
IF NOT ONE INCH ON THIS SHEET, ADJUST SCALES ACCORDINGLY



SHEET
DT-8

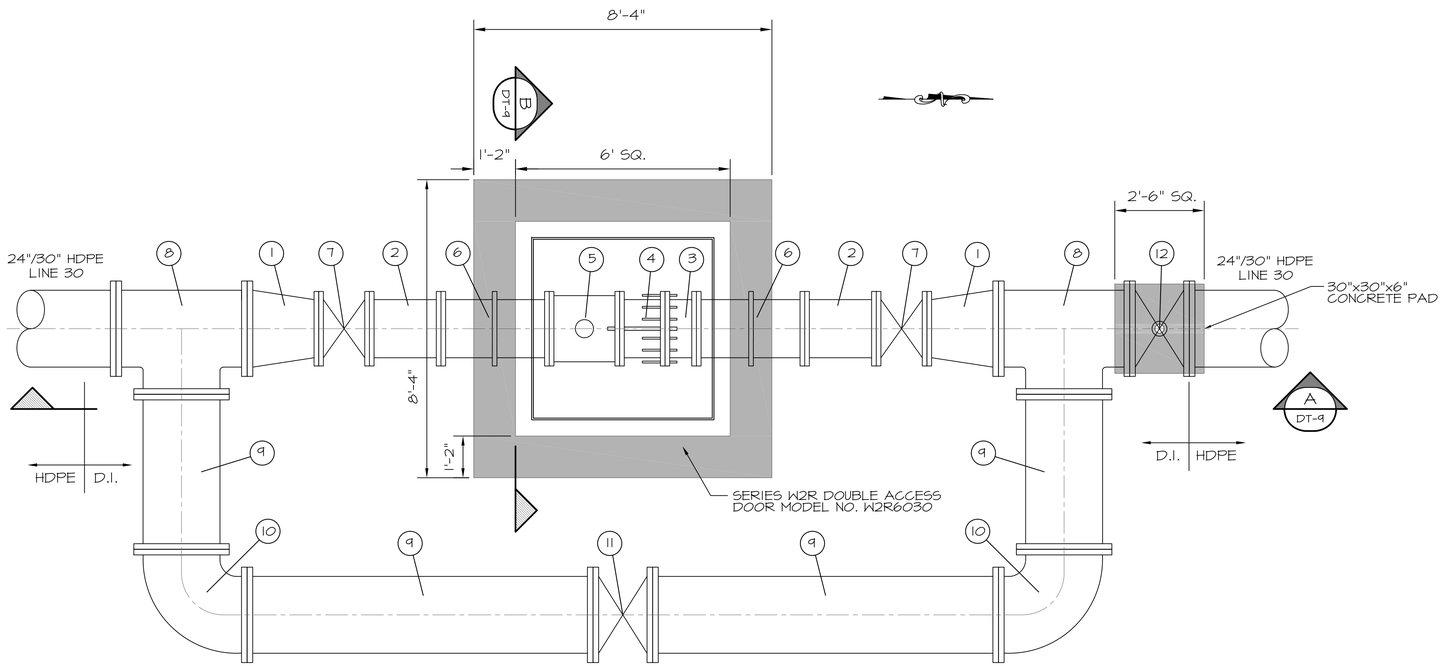

24" PIPING SCHEDULE STRUCTURE	
NO.	ITEM
1	18"x24" ECCENTRIC REDUCER, FLxFL
2	18" D.I. SPOOL, PExPE
3	18" D.I. SPOOL, FLxFL
4	18" D.I. DISMANTLING JOINT, FLxFL
5	18" ELECTROMAGNETIC FLOW METER
6	18" WALL PIPE, FLxPE
7	18" PLUG VALVE, PExPE
8	24"x24"x24" D.I. TEE, PExPE
9	24" D.I. SPOOL, PExPE
10	24" 90° BEND, PExPE
11	24" PLUG VALVE, PExPE
12	24" ELECTRONIC ACTUATED BUTTERFLY VALVE, PExPE
13	4" SCH. 80 PVC
14	4" SHC. 80 PVC 90° BEND
15	FLOOR DRAIN
16	PIPE SUPPORT

30" PIPING SCHEDULE STRUCTURE	
NO.	ITEM
1	18"x30" ECCENTRIC REDUCER, FLxFL
8	30"x30"x30" D.I. TEE, PExPE
9	30" D.I. SPOOL, PExPE
10	30" 90° BEND, PExPE
11	30" PLUG VALVE, PExPE
12	30" ELECTRONIC ACTUATED BUTTERFLY VALVE, PExPE

NOTES:

1. FIELD ROUTE SCH. 80 PVC DRAIN PIPE TO NEAREST DAYLIGHT/MANHOLE.

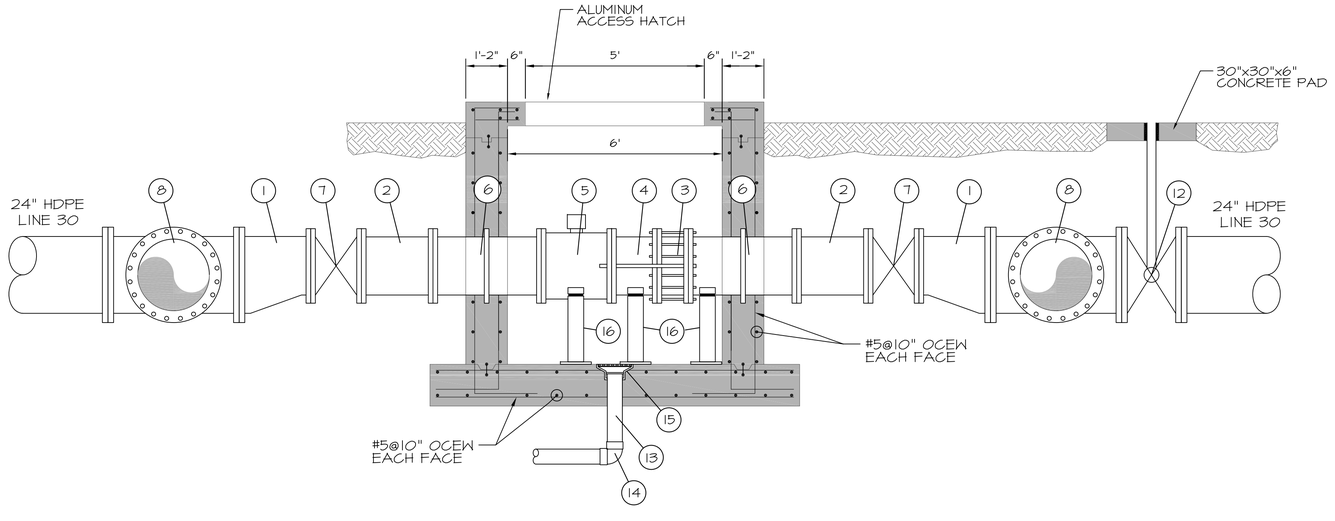

A DT-9 SECTION
SCALE: 1/2"=1'-0"

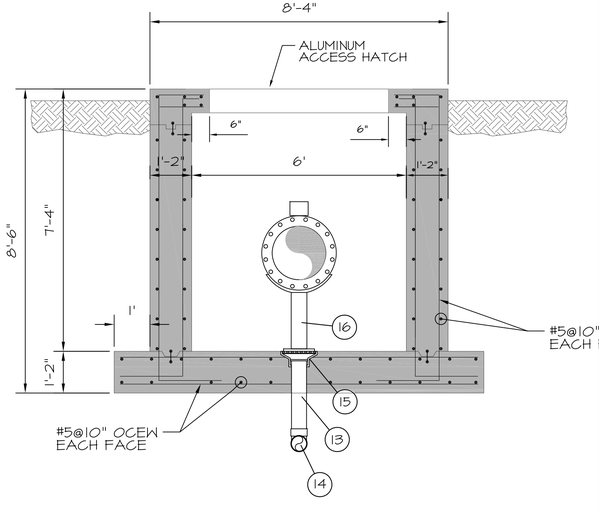

B DT-9 SECTION
SCALE: 1/2"=1'-0"

WALL ENGINEERING
223 N. WASHINGTON AVE. DURANT, OK 74701
OKLAHOMA CA #5413 EXP. JUNE 30, 2023

REGISTERED PROFESSIONAL ENGINEER
06/21/22
BRANDON WALL
21108
OKLAHOMA

SUBMITTAL / REVISIONS:

DATE	BY	SUBMITTAL / REVISION
03/22	JR	ODEQ SUBMITTAL
06/22	JR	ISSUED FOR BIDDING

SHAWNEE MUNICIPAL AUTHORITY
WASTEWATER SYSTEM IMPROVEMENTS
CONTRACT DOCUMENTS VOL. 4 OF 6 - NORTHSIDE WWTP

MAG METER VAULT
MECHANICAL PLAN, SECTION AND SCHEDULES

PROJECT NO.
SHN-20-01
DATE
06/22
DRAWN BY:
TL
CHECKED BY:
JR
REVIEWED BY:
DBW
SCALE:
1/2"=1'-0"

BAR IS ONE INCH ON ORIGINAL DRAWING
0" 1"
IF NOT ONE INCH ON THIS SHEET, ADJUST SCALES ACCORDINGLY

SHEET
DT-9

POWER AND LIGHTING LEGEND

ABBREVIATION OR SYMBOL — DESCRIPTION

FIXTURE DESIGNATION

- 2x4 LAY-IN OR SURFACE MOUNTED FIXTURE
- 2x4 LAY-IN OR SURFACE MOUNTED FIXTURE; SHADING INDICATES EMERGENCY POWERED BATTERY
- 2x2 LAY-IN OR SURFACE MOUNTED FIXTURE
- 2x2 LAY-IN OR SURFACE MOUNTED FIXTURE; SHADING INDICATES EMERGENCY POWERED BATTERY
- SURFACE OR STRIP FIXTURE
- RECESSED STRIP FIXTURE; SHADING INDICATES EMERGENCY POWERED BATTERY
- RECESSED DOWNLIGHT
- RECESSED DOWNLIGHT; SHADING INDICATES EMERGENCY POWERED BATTERY
- WALL-MOUNTED LINEAR FIXTURE
- DOWNLIGHT FIXTURE
- DOWNLIGHT FIXTURE, SHADING INDICATES EMERGENCY POWERED BATTERY
- WALL-MOUNTED FIXTURE
- EXIT SIGN; LED TYPE, DARKENED AREA INDICATES FACE, ARROWS INDICATE DIRECTION OF EGRESS
- RECESSED ELECTRICAL PANEL WITH REQUIRED CLEARANCE
- SURFACE MOUNTED ELECTRICAL PANEL WITH REQUIRED CLEARANCE
- COMBINATION STARTER DISCONNECT SWITCH
- NON FUSED DISCONNECT SWITCH
- FUSED DISCONNECT SWITCH
- MOTOR STARTER
- (M) ELECTRIC MOTOR, HORSEPOWER AS SHOWN.
- [J] JUNCTION BOX
- [J]$_{XYZ}$ SPECIALTY JUNCTION BOX WITH DESIGNATION "XYZ". REFER TO JBOX ABBREVIATION LEGEND.

DATA DEVICES

- A, E — TELEPHONE OUTLET; ABOVE COUNTER, & FIREMAN'S
- A, C — DATA OUTLET; ABOVE COUNTER & CEILING MOUNTED
- A — COMBINATION DATA/TELEPHONE OUTLET & COMBINATION DATA/TELEPHONE OUTLET ABOVE COUNTER
- TV/64" — TELEVISION OUTLET WITH HEIGHT A.F.F. DESIGNATION

ABBREVIATION OR SYMBOL — DESCRIPTION

FLOOR BOXES

FLOOR/WALL BOX WITH DESIGNATION "XYZ". REFER TO FLOOR/WALL BOX ABBREVIATION SCHEDULE.

XYZ

(1) DUPLEX RECEPTACLE
(2) GFI DUPLEX RECEPTACLE
(3) QUADRUPLEX RECEPTACLE
(4) GFI QUADRUPLEX RECEPTACLE

(6) TELEPHONE OUTLET
(7) DATA OUTLET
(8) COMBO TELE/DATA OUTLET
(9) AUDIO VISUAL

	DUPLEX	QUADRUPLEX
STANDARD		
ABOVE COUNTER		
GFCI		
GFCI ABOVE COUNTER		
WEATHER PROOF		
CEILING MOUNT		

ABC — MULTI POLE RECEPTACLE, REFER TO RECEPTACLE ABBREVIATION LEGEND FOR DETAILS.

XYZ — SIMPLEX RECEPTACLE, REFER TO RECEPTACLE ABBREVIATION LEGEND FOR DETAILS.

SPECIALTY RECEPTACLES WITH DESIGNATION "XYZ", "ABC", etc. REFER TO RECEPTACLE ABBREVIATION LEGEND BELOW.

ROOM CONTROLLERS / POWER PACKS

- [P]^{XX} SPECIALTY POWER PACK WITH DESIGNATION "XX", REFER TO ABBREVIATION LEGEND BELOW.
- [R]^{XX} SPECIALTY ROOM CONTROLLER WITH DESIGNATION "XX", REFER TO ABBREVIATION LEGEND BELOW.

ABBREVIATION OR SYMBOL — DESCRIPTION

SWITCHES

- S SINGLE POLE LIGHT SWITCH
- S_M PADLOCKABLE HP RATED SWITCH
- S_X SPECIALTY SWITCH, FOR "X" DESIGNATION, SEE LIGHTING SWITCH ABBREVIATION SCHEDULE BELOW.

COMMON ABBREVIATIONS

A	AMP
AFF	ABOVE FINISHED FLOOR
AIC	AMPS INTERRUPTING CAPACITY
AUX	AUXILIARY
BKR	BREAKER
C	CONDUIT
CBA	COLOR BY ARCHITECT
CGRS	PVC COATED GALVANIZED RIGID STEEL
CKT	CIRCUIT
CP	CONTROL PANEL
CPT	CONTROL POWER TRANSFORMER
EC	EMPTY OR EMBEDDED CONDUIT
EF	EXHAUST FAN
EG	EQUIPMENT GROUND
EL	ELEVATION
EMT	ELECTRICAL METALLIC TUBING
EWC	ELECTRIC WATER COOLER
FA	FIRE ALARM
FACP	FIRE ALARM CONTROL PANEL
FC	FAN COIL
FLR	FLOOR
FOC	FIBER OPTIC CABLE
FT	FEET
GFCI	GROUND FAULT CIRCUIT INTERRUPTER
GND	GROUND
GRS	GALVANIZED RIGID STEEL
HOA	HAND-OFF-AUTO
HP	HORSEPOWER OR HEAT PUMP
JB	JUNCTION BOX
kVA	KILOVOLT-AMPERE
kVAR	KILOVOLT-AMPERE, REACTIVE
kW	KILOWATT
L.O.	LUGS ONLY
LSIG	ADJUSTABLE TRIP UNIT WITH LONG TIME, SHORT TIME, INSTANTANEOUS, AND GROUND FAULT SETTINGS
LV	LOW VOLTAGE
MCB	MAIN CIRCUIT BREAKER
MCC	MOTOR CONTROL CENTER
MCP	MOTOR CIRCUIT PROTECTOR
MFR	MANUFACTURER
MIN	MINIMUM
MLO	MAIN LUG ONLY
MTD	MOUNTED
NFDS	NON-FUSED DISCONNECT SWITCH
NTS	NOT TO SCALE
OC	ON CENTER
OH	OVERHEAD
OL	OVERLOAD
PEC	PHOTO ELECTRIC CELL
PL	PILOT LIGHT
PNL	PANEL
PVC	SCHEDULE 40 POLYVINYL CONDUIT
RA	FIRE ALARM REMOTE ANNUNCIATOR
RECPT	RECEPTACLE
RM	ROOM
SE	SERVICE ENTRANCE
SHT	SHEET
SN	SOLID NEUTRAL
SPD	SURGE PROTECTIVE DEVICE
SW	SWITCH
TEL	TELEPHONE
TYP	TYPICAL
TC	TIME CLOCK
UG	UNDER GROUND
UH	UNIT HEATER
VA	VOLT-AMP
VFD	VARIABLE FREQUENCY DRIVE
W	WATT OR WIRE
WH	WATER HEATER
WM	WATT METER
WP	WEATHERPROOF
XMFR	TRANSFORMER

ABBREVIATION OR SYMBOL — DESCRIPTION

SENSORS

- XX — SPECIALTY CEILING MOUNT SENSOR WITH DESIGNATION "XX", REFER TO ABBREVIATION LEGEND BELOW.
- XX — SPECIALTY CORNER MOUNT SENSOR WITH DESIGNATION "XX", REFER TO ABBREVIATION LEGEND BELOW.

COMMUNICATIONS DEVICES

- I — INTERCOM STATION
- I$_M$ — MASTER INTERCOM STATION
- C — CLOCK
- C$_D$ — CLOCK, DUAL SIDED
- C$_{WG}$ — CLOCK, WITH WIREGUARD
- H — HORN SPEAKER
- H$_{WP}$ — HORN SPEAKER - WEATHERPROOF
- P — PAGING SPEAKER
- C — CAMERA WITH PAN, TILT, & ZOOM
- C$_{WP}$ — CAMERA - WEATHERPROOF WITH PAN, TILT, & ZOOM
- J$_V$ J$_A$ — SPECIAL SYSTEMS JUNCTION BOX ABOVE CEILING. ROUTE 1" C WITH PULL STRING TO DATA/ELECTRICAL ROOM. (V) VIDEO, (A) ALARM/ACCESS
- A — ACCESS CONTROL - PROVIDE ACCESS CONTROL ROUGH-IN AT DOOR. REFER TO DETAILS FOR ACCESS CONTROL ROUGH-IN REQUIREMENTS.
- D — MAGNETIC DOOR HOLDER
- F — FIRE ALARM PULL STATION
- F — FIRE ALARM COMBINATION HORN/STROBE DEVICE
- S — FIRE ALARM COMBINATION SPEAKER/STROBE DEVICE
- F — FIRE ALARM STROBE DEVICE
- Z, Z$_C$, Z$_M$ — FIRE ALARM ZAM DEVICE; IAM (I), CONTROL (C), OR MONITOR MODULE (M)
- S — SMOKE DETECTOR
- H — HEAT DETECTOR
- S$_D$ — DUCT SMOKE DETECTOR
- S$_{DA}$ — DUCT SMOKE DETECTOR WITH AUXILIARY CONTACTS
- TS, FS — TAMPER SWITCH / FLOW SWITCH
- ATS — SERVICE ENTRANCE RATED AUTOMATIC TRANSFER SWITCH
- M — MANHOLE, HANDHOLE DESIGNATION REFER TO SCHEDULE.

GENERAL NOTES

1. SOME SYMBOLS OR ABBREVIATIONS MAY APPEAR ON THIS SHEET AND NOT BE UTILIZED ON THE PROJECTS.

WIRE TYPES

- LIGHTING CONTROL CABLING

EQUIPMENT AND CONDUIT LINE TYPES

- FURNISH + INSTALL NEW
- EXISTING
- DEMOLISH
- UNDERGROUND CONNECT TO EXISTING

2 (3#8 + 1#8 + 1#10EG) 3/4" GRS

- CONDUIT TYPE (SEE ABBREVIATIONS) REFER TO SPECIFICATIONS IF NOT SHOWN
- CONDUIT SIZE
- GROUNDED (NEUTRAL) CONDUCTOR, NUMBER AND SIZE
- GROUNDED (NEUTRAL) CONDUCTOR, NUMBER AND SIZE
- PHASE (HOT) CONDUCTOR, NUMBER & SIZE
- NUMBER OF SETS

XX - ## — HOME RUN TO PANEL. LETTER(S) INDICATE NAME OF PANEL, NUMBER(S) INDICATE CIRCUIT NUMBERS.

ONE LINE SYMBOLS

- CIRCUIT BREAKER, TRIP RATING SHOWN, 3-POLE UNLESS NOTED.
- FUSE, CURRENT LIMITING, RATING AS SHOWN.
- 480V / ** kVA / 208V — TRANSFORMER, RATINGS AS SHOWN.
- M 10 HP — ELECTRIC MOTOR, HORSEPOWER SHOWN.
- MOTOR STARTER, SIZE AS SHOWN OR REQUIRED. FVNR UNLESS NOTED.
- SPD — SURGE PROTECTION DEVICE.
- G *KW — GENERATOR
- GROUNDING ROD, 3/4" x 10' MINIMUM, COPPER CLAD.
- VARIABLE FREQUENCY DRIVE.
- ATS-1 200A / 3P /BP — AUTOMATIC TRANSFER SWITCH

WALL ENGINEERING
PO BOX 1457, DURANT, OK 74702
OKLAHOMA CA #5413 EXP. JUNE 30, 2023

SUBMITTAL / REVISIONS:

DATE	BY	SUBMITTAL / REVISION
.	.	.
.	.	.
.	.	.
.	.	.
.	.	.
.	.	.
.	.	.
.	.	.

SHAWNEE MUNICIPAL AUTHORITY
WASTEWATER SYSTEM IMPROVEMENTS
SHAWNEE, OKLAHOMA

ELECTRICAL LEGEND

PROJECT NO. SHN–20–01
DATE 06/22
DRAWN BY: CD
CHECKED BY: BB
REVIEWED BY: BB
SCALE: AS SHOWN

BAR IS ONE INCH ON ORIGINAL DRAWING
0" 1"
IF NOT ONE INCH ON THIS SHEET, ADJUST SCALES ACCORDINGLY

SHEET
E1



BROWN ENGINEERS
501-448-0100

P:\PRODUCTION\PROJECTS\WALL ENGINEERING (WE)\WE-055 SHAWNEE NORTHSIDE WASTEWATER TREATMENT PLANT\DWG\E1.DWG
6/2/2022 1:10 PM

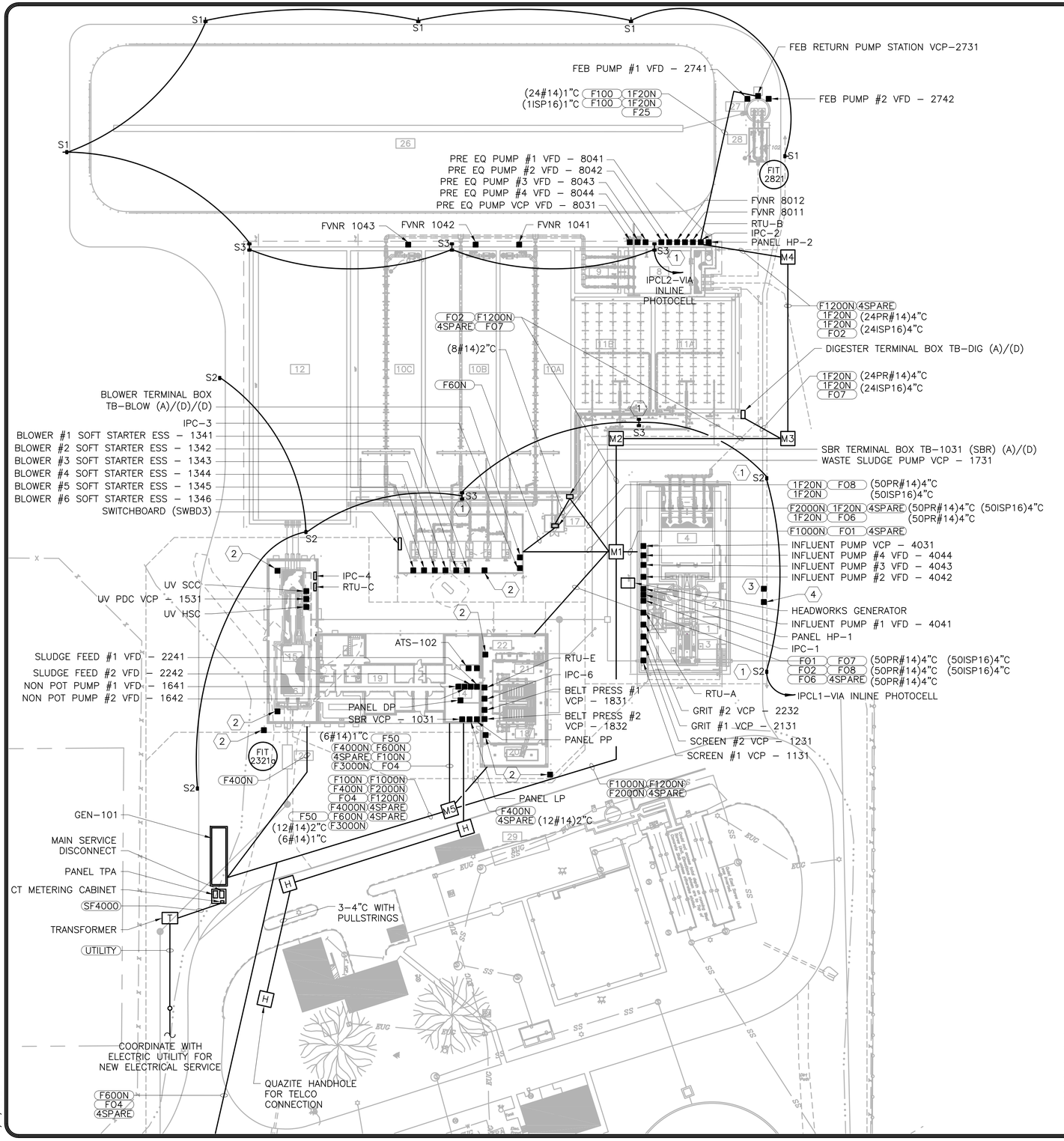

MANUFACTURER–DESIGNED EQUIPMENT SYSTEM NOTES:

1. THIS PROJECT INCLUDES THE CONSTRUCTION OF MANUFACTURER–DESIGNED EQUIPMENT SYSTEMS.
2. POWER, SIGNAL AND CONTROL CIRCUITS ARE SHOWN ON THESE DRAWINGS BASED ON SIMILAR MANUFACTURER–DESIGNED EQUIPMENT SYSTEMS.
3. THE FINAL POWER, SIGNAL AND CONTROL CIRCUIT REQUIREMENTS SHALL BE DETERMINED BY THE APPROVED MANUFACTURER.
4. DRAWINGS, SPECIFICATIONS, INSTALLATION MANUALS, AND OTHER REQUIRED DOCUMENTATION SHALL BE PROVIDED BY THE APPROVED MANUFACTURERS AND MAY INCLUDE ADDITIONAL AND/OR ALTERED REQUIREMENTS THAN SHOWN ON THESE DRAWINGS.
5. THE CONTRACTOR SHALL COORDINATE WITH THOSE APPROVED SUBMITTAL DRAWINGS AND PROVIDE ALL REQUIRED LABOR AND MATERIALS NECESSARY FOR A COMPLETE AND ACCEPTED SYSTEM AT NO ADDITIONAL COST TO THE OWNER.

KEYED NOTES:

1. CCTV LOCATION POLE MOUNT. ROUTE (3#12)3/4"C TO 120 VOLT PANEL SCHEDULES.
2. CCTV LOCATION BUILDING MOUNT
3. FURNISH AND INSTALL CIRCUIT 1F20N FROM PANEL IPCL1 TO MAG METER IN VAULT. CONNECT TO 20A/1P CIRCUIT BREAKER. FURNISH AND INSTALL (1ISP16)1"C FROM MAG METER TO PANEL RTU–A.
4. FURNISH AND INSTALL CIRCUIT F20 FROM PANEL HP–1 TO ACTUATED VALVE. CONNECT TO 20A/3P CIRCUIT BREAKER. FURNISH AND INSTALL (8#14)1"C AND (2ISP16)1"C TO PANEL RTU–A.

CABLE LEGEND:

UTILITY 3(EMPTY)5"C

FO* (12STRAND FIBER OPTIC)2"C

4SPARE 4–SPARE 4"C

WALL ENGINEERING
PO BOX 1457, DURANT, OK 74702
OKLAHOMA CA #5413 EXP. JUNE 30, 2023

SUBMITTAL / REVISIONS:

DATE	BY	SUBMITTAL / REVISION
. .	. .	. .

SHAWNEE MUNICIPAL AUTHORITY
WASTEWATER SYSTEM IMPROVEMENTS
SHAWNEE, OKLAHOMA

ELECTRICAL SITE PLAN

PROJECT NO. SHN–20–01
DATE 06/22
DRAWN BY: CD
CHECKED BY: BB
REVIEWED BY: BB
SCALE: AS SHOWN

BAR IS ONE INCH ON ORIGINAL DRAWING
0" 1"
IF NOT ONE INCH ON THIS SHEET, ADJUST SCALES ACCORDINGLY

SHEET
EA1

REGISTERED PROFESSIONAL ENGINEER
BRUCE W. BROWN
20995
06-01-2022
OKLAHOMA

BROWN ENGINEERS
501-448-0100

P:\PRODUCTION\PROJECTS\WALL ENGINEERING (WE)\WE–055 SHAWNEE NORTHSIDE WASTEWATER TREATMENT PLANT\DWG\EA1.DWG
6/2/2022 1:55 PM

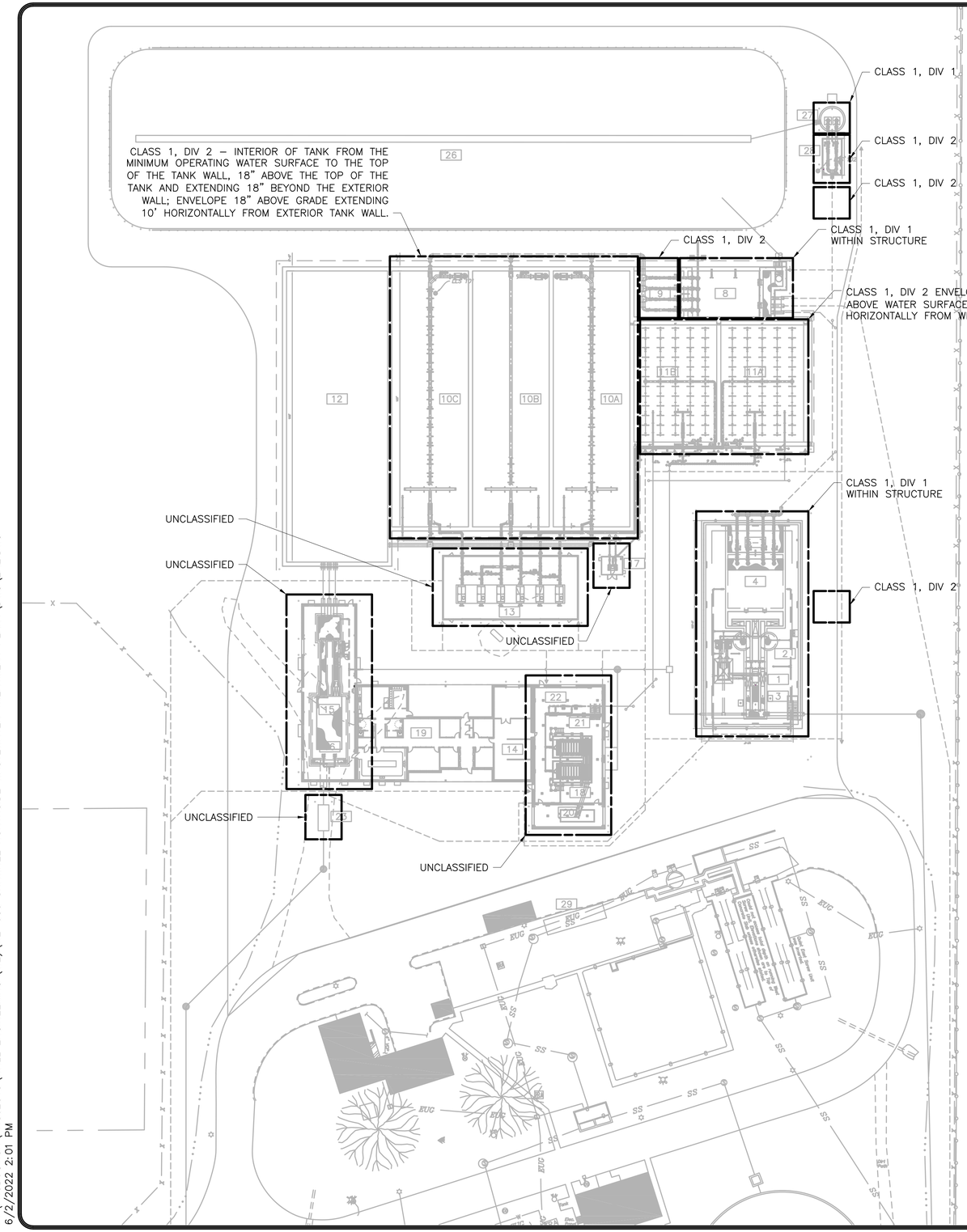

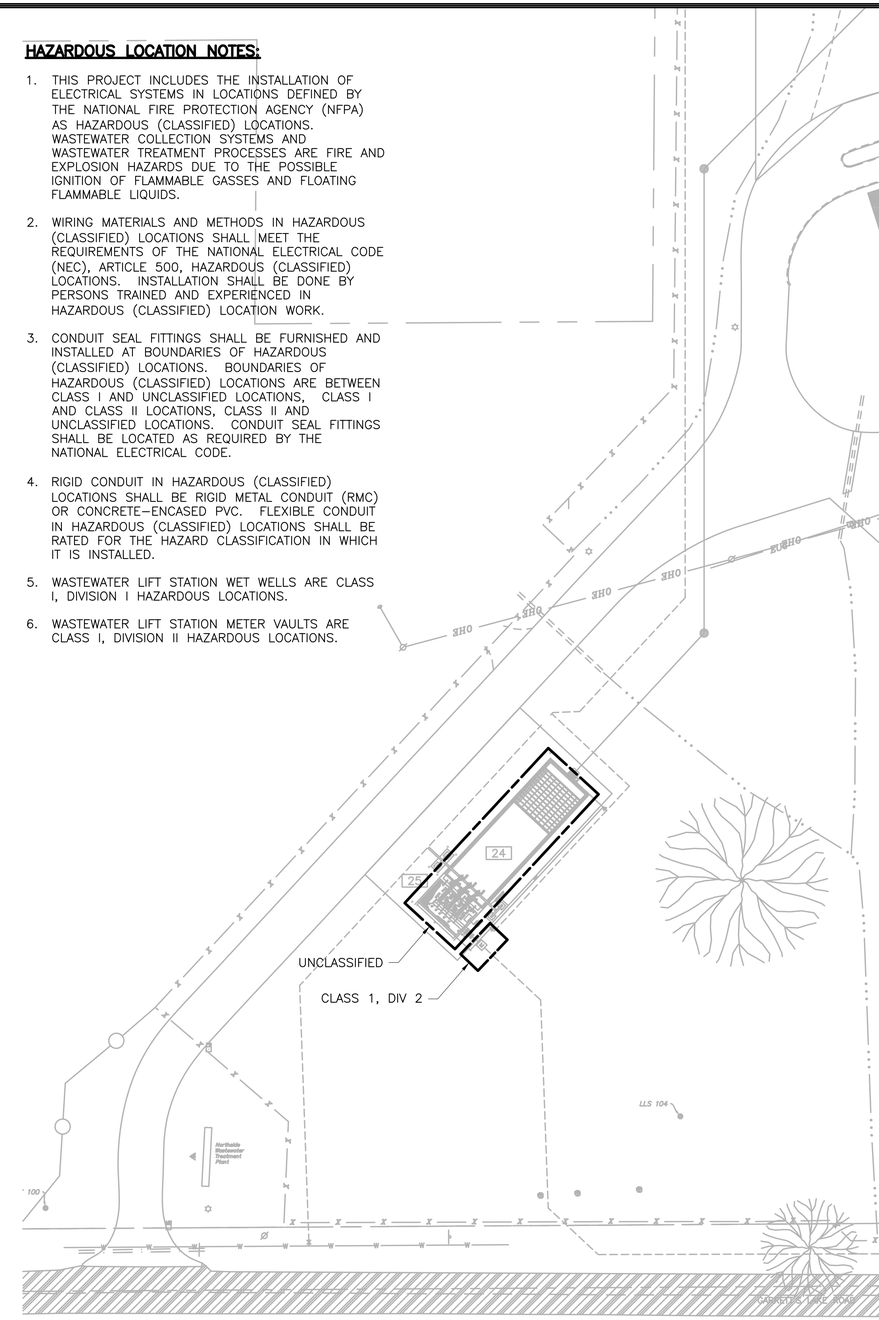

HAZARDOUS LOCATION NOTES:

1. THIS PROJECT INCLUDES THE INSTALLATION OF ELECTRICAL SYSTEMS IN LOCATIONS DEFINED BY THE NATIONAL FIRE PROTECTION AGENCY (NFPA) AS HAZARDOUS (CLASSIFIED) LOCATIONS. WASTEWATER COLLECTION SYSTEMS AND WASTEWATER TREATMENT PROCESSES ARE FIRE AND EXPLOSION HAZARDS DUE TO THE POSSIBLE IGNITION OF FLAMMABLE GASSES AND FLOATING FLAMMABLE LIQUIDS.
2. WIRING MATERIALS AND METHODS IN HAZARDOUS (CLASSIFIED) LOCATIONS SHALL MEET THE REQUIREMENTS OF THE NATIONAL ELECTRICAL CODE (NEC), ARTICLE 500, HAZARDOUS (CLASSIFIED) LOCATIONS. INSTALLATION SHALL BE DONE BY PERSONS TRAINED AND EXPERIENCED IN HAZARDOUS (CLASSIFIED) LOCATION WORK.
3. CONDUIT SEAL FITTINGS SHALL BE FURNISHED AND INSTALLED AT BOUNDARIES OF HAZARDOUS (CLASSIFIED) LOCATIONS. BOUNDARIES OF HAZARDOUS (CLASSIFIED) LOCATIONS ARE BETWEEN CLASS I AND UNCLASSIFIED LOCATIONS, CLASS I AND CLASS II LOCATIONS, CLASS II AND UNCLASSIFIED LOCATIONS. CONDUIT SEAL FITTINGS SHALL BE LOCATED AS REQUIRED BY THE NATIONAL ELECTRICAL CODE.
4. RIGID CONDUIT IN HAZARDOUS (CLASSIFIED) LOCATIONS SHALL BE RIGID METAL CONDUIT (RMC) OR CONCRETE–ENCASED PVC. FLEXIBLE CONDUIT IN HAZARDOUS (CLASSIFIED) LOCATIONS SHALL BE RATED FOR THE HAZARD CLASSIFICATION IN WHICH IT IS INSTALLED.
5. WASTEWATER LIFT STATION WET WELLS ARE CLASS I, DIVISION I HAZARDOUS LOCATIONS.
6. WASTEWATER LIFT STATION METER VAULTS ARE CLASS I, DIVISION II HAZARDOUS LOCATIONS.

WALL ENGINEERING
PO BOX 1457, DURANT, OK 74702
OKLAHOMA CA #5413 EXP. JUNE 30, 2023

SUBMITTAL / REVISIONS:

DATE	BY	SUBMITTAL / REVISION
.	.	.

SHAWNEE MUNICIPAL AUTHORITY
WASTEWATER SYSTEM IMPROVEMENTS
SHAWNEE, OKLAHOMA

ELECTRICAL HAZARD CLASSIFICATION

PROJECT NO.
SHN–20–01
DATE
06/22
DRAWN BY:
CD
CHECKED BY:
BB
REVIEWED BY:
BB
SCALE:
AS SHOWN

BAR IS ONE INCH ON ORIGINAL DRAWING
0" 1"
IF NOT ONE INCH ON THIS SHEET, ADJUST SCALES ACCORDINGLY

SHEET
EA2

BRUCE BROWN 20995 REGISTERED PROFESSIONAL ENGINEER OKLAHOMA
Date 6-01-2022

BROWN ENGINEERS
501-448-0100

P:\PRODUCTION\PROJECTS\WALL ENGINEERING (WE)\WE-055 SHAWNEE NORTHSIDE WASTEWATER TREATMENT PLANT\DWG\EA2.DWG
6/2/2022 2:01 PM

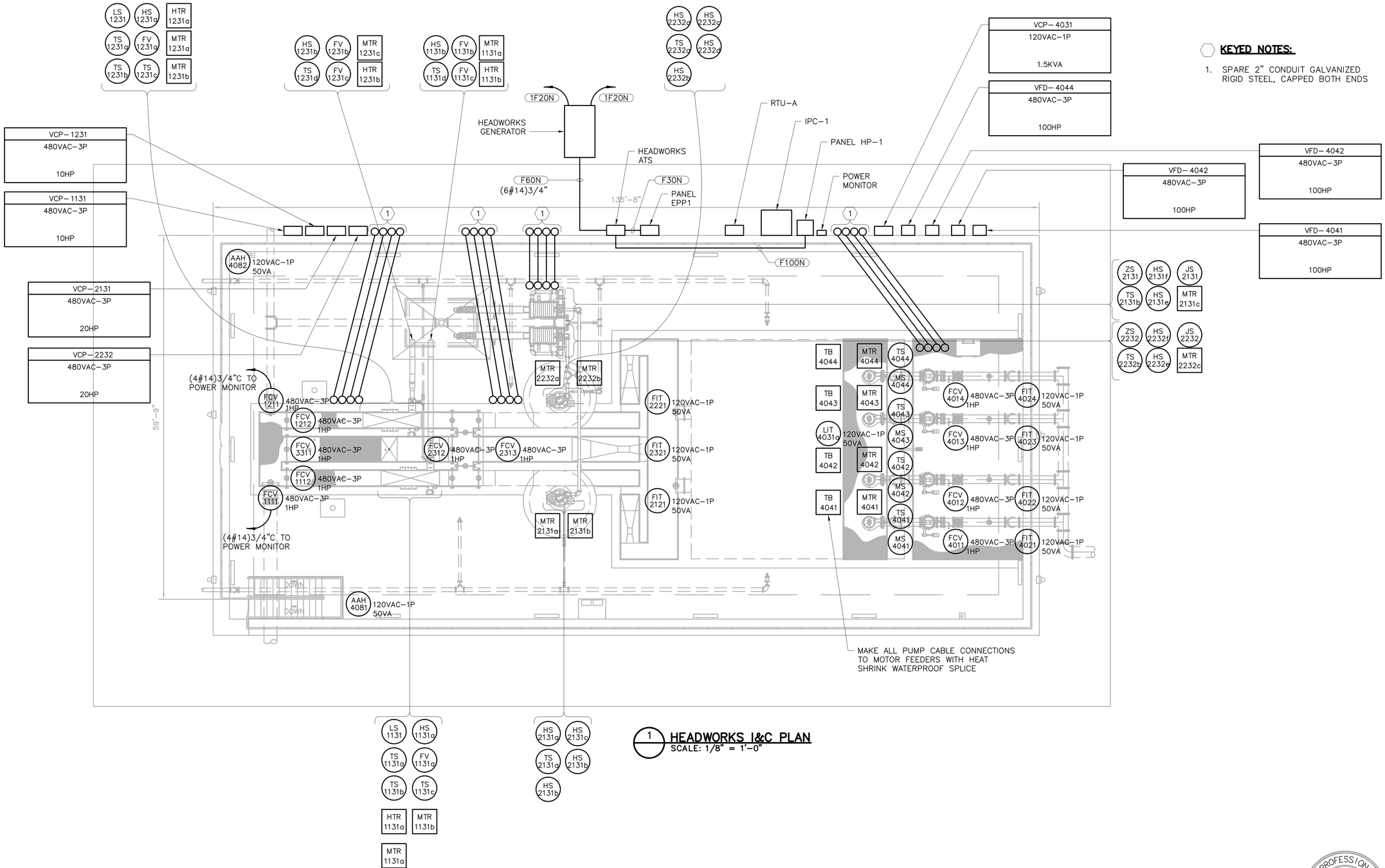

1 HEADWORKS I&C PLAN
SCALE: 1/8" = 1'-0"

KEYED NOTES:

1. SPARE 2" CONDUIT GALVANIZED RIGID STEEL, CAPPED BOTH ENDS

P:\PRODUCTION\PROJECTS\WALL ENGINEERING (WE)\WE-055 SHAWNEE NORTHSIDE WASTEWATER TREATMENT PLANT\DWG\EB1.DWG
6/1/2022 3:49 PM

WALL ENGINEERING
PO BOX 1457, DURANT, OK 74702
OKLAHOMA CA #5413 EXP. JUNE 30, 2023

SUBMITTAL / REVISIONS:

DATE	BY	SUBMITTAL / REVISION

SHAWNEE MUNICIPAL AUTHORITY
WASTEWATER SYSTEM IMPROVEMENTS
SHAWNEE, OKLAHOMA

ELECTRICAL
HEADWORKS I & C PLAN

PROJECT NO.
SHN-20-01
DATE
06/22
DRAWN BY:
CD
CHECKED BY:
BB
REVIEWED BY:
BB
SCALE:
AS SHOWN

BAR IS ONE INCH ON ORIGINAL DRAWING
0' 1'
IF NOT ONE INCH ON THIS SHEET, ADJUST SCALES ACCORDINGLY

REGISTERED PROFESSIONAL ENGINEER
BRUCE BROWN
20995
06-01-2022
OKLAHOMA

BROWN ENGINEERS
501-448-0100

SHEET
EB1

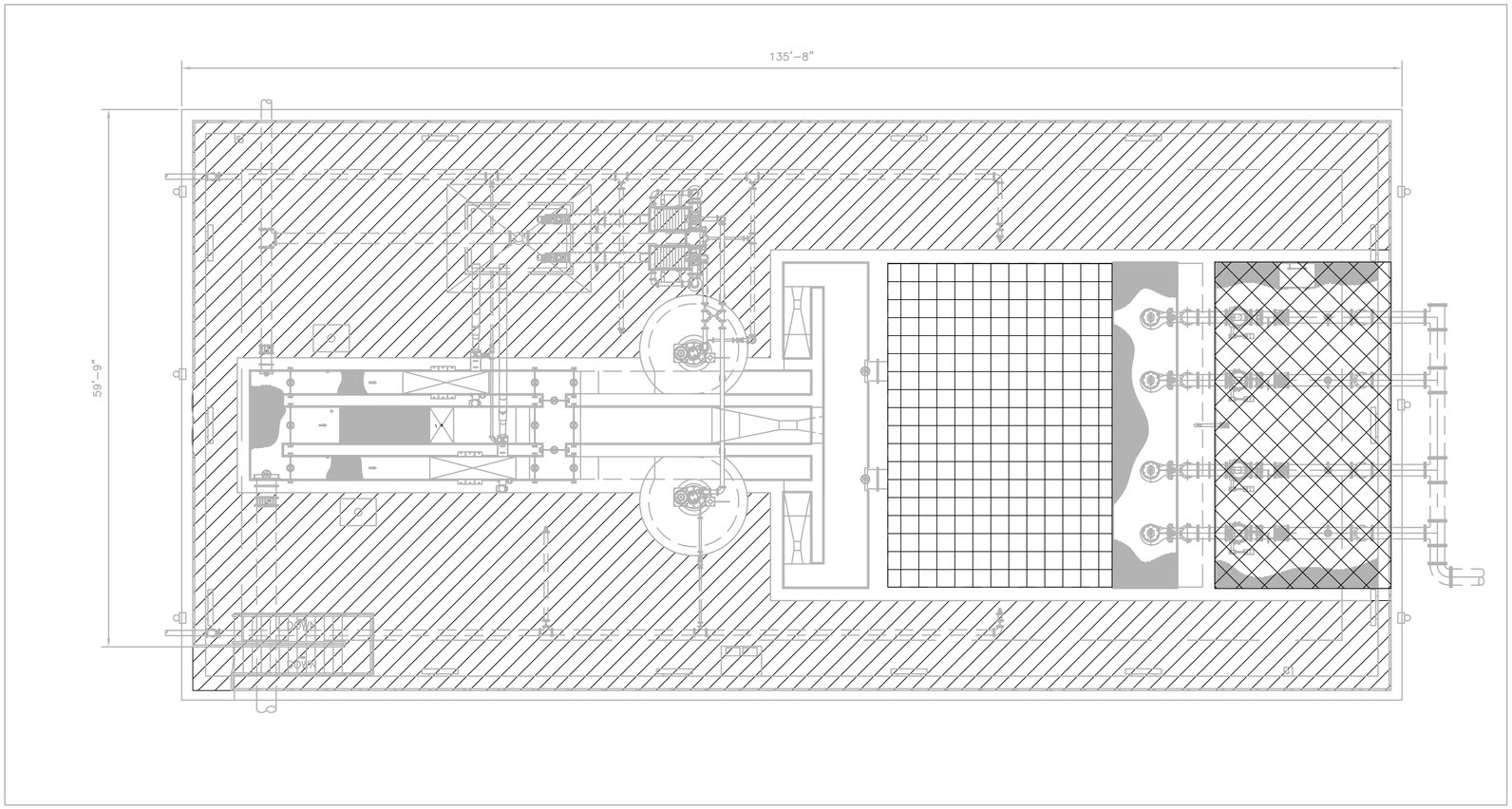

HATCH REGION LEGEND:

- INSTALL CONDUIT BELOW GRADE ONLY
- INSTALL CONDUIT EMBEDDED IN CONCRETE STRUCTURE ONLY
- INSTALL CONDUIT ON VERTICAL OR HORIZONTAL SURFACE ONLY (AVOID TRIPPING HAZARD) CONDUIT BELOW SLAB NOT ALLOWED
- OPEN STRUCTURE, CONDUIT INSTALLATION NOT ALLOWED

WALL ENGINEERING
PO BOX 1457, DURANT, OK 74702
OKLAHOMA CA #5413 EXP. JUNE 30, 2023

SUBMITTAL / REVISIONS:

DATE	BY	SUBMITTAL / REVISION
.	.	.
.	.	.
.	.	.
.	.	.
.	.	.
.	.	.
.	.	.

SHAWNEE MUNICIPAL AUTHORITY
WASTEWATER SYSTEM IMPROVEMENTS
SHAWNEE, OKLAHOMA

ELECTRICAL
HEADWORKS CONDUIT ROUTING PLAN

PROJECT NO.
SHN-20-01

DATE
06/22

DRAWN BY:
CD

CHECKED BY:
BB

REVIEWED BY:
BB

SCALE:
AS SHOWN

BAR IS ONE INCH ON ORIGINAL DRAWING
0" 1"
IF NOT ONE INCH ON THIS SHEET, ADJUST SCALES ACCORDINGLY

SHEET

EB2

REGISTERED PROFESSIONAL ENGINEER
BRUCE BROWN
20995
OKLAHOMA
BROWN ENGINEERS
501-448-0100

P:\PRODUCTION\PROJECTS\WALL ENGINEERING (WE)\WE-055 SHAWNEE NORTHSIDE WASTEWATER TREATMENT PLANT\DWG\EB2.DWG
5/20/2022 8:42 AM

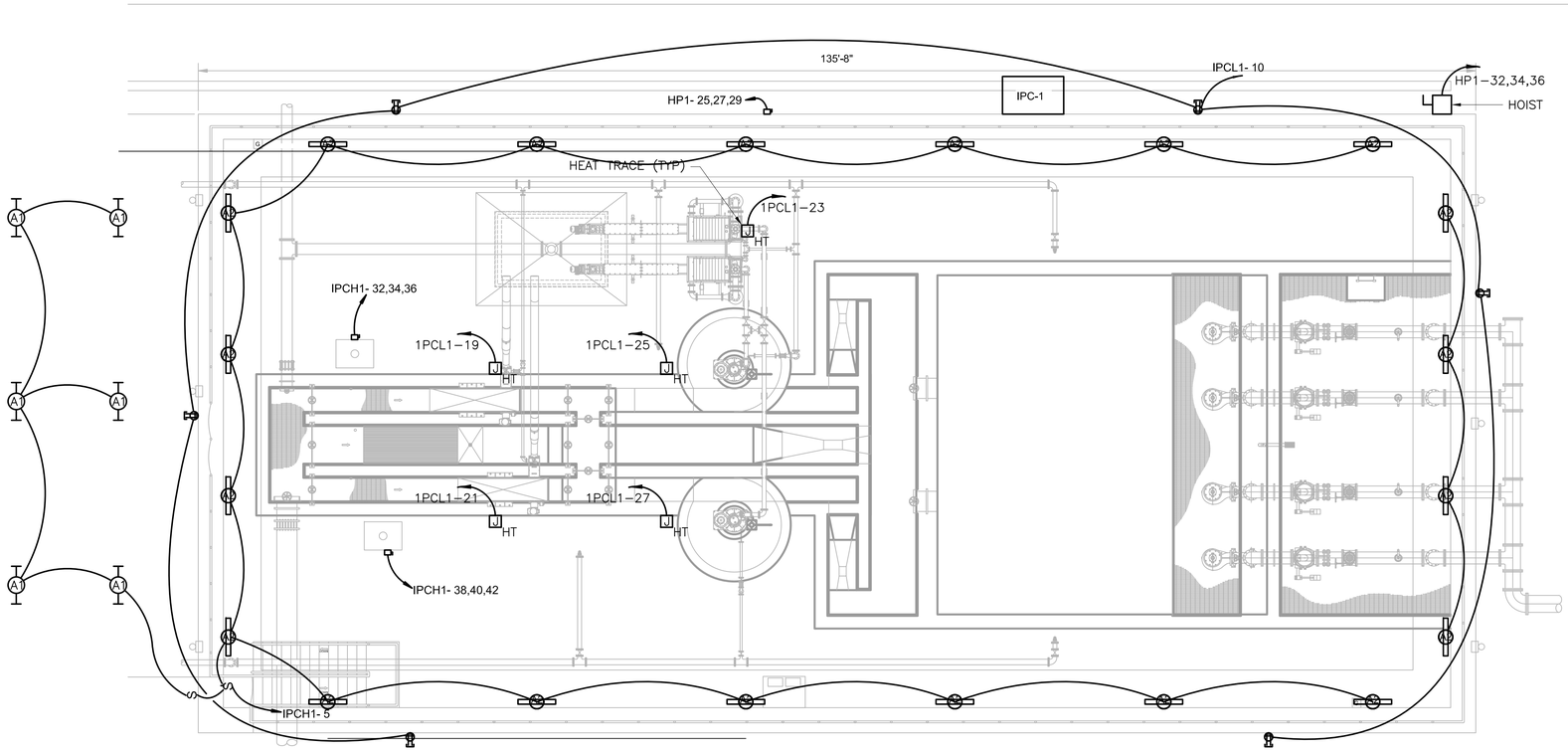

1 **HEADWORKS FACILITY PLAN**
SCALE: 1/8" = 1'–0"

P:\PRODUCTION\PROJECTS\WALL ENGINEERING (WE)\WE-055 SHAWNEE NORTHSIDE WASTEWATER TREATMENT PLANT\DWG\EB3.DWG
5/31/2022 3:46 PM

WALL ENGINEERING
PO BOX 1457, DURANT, OK 74702
OKLAHOMA CA #5413 EXP. JUNE 30, 2023

SUBMITTAL / REVISIONS:

DATE	BY	SUBMITTAL / REVISION
.	.	.
.	.	.
.	.	.
.	.	.
.	.	.
.	.	.
.	.	.
.	.	.

SHAWNEE MUNICIPAL AUTHORITY
WASTEWATER SYSTEM IMPROVEMENTS
SHAWNEE, OKLAHOMA

ELECTRICAL
HEADWORKS CONDUIT ROUTING PLAN

PROJECT NO.
SHN–20–01
DATE
06/22
DRAWN BY:
CD
CHECKED BY:
BB
REVIEWED BY:
BB
SCALE:
AS SHOWN

BAR IS ONE INCH ON ORIGINAL DRAWING
0" 1"
IF NOT ONE INCH ON THIS SHEET, ADJUST SCALES ACCORDINGLY

SHEET
EB3

REGISTERED PROFESSIONAL ENGINEER
BRUCE BROWN
20995
OKLAHOMA
06-01-2022

BROWN ENGINEERS
501-448-0100

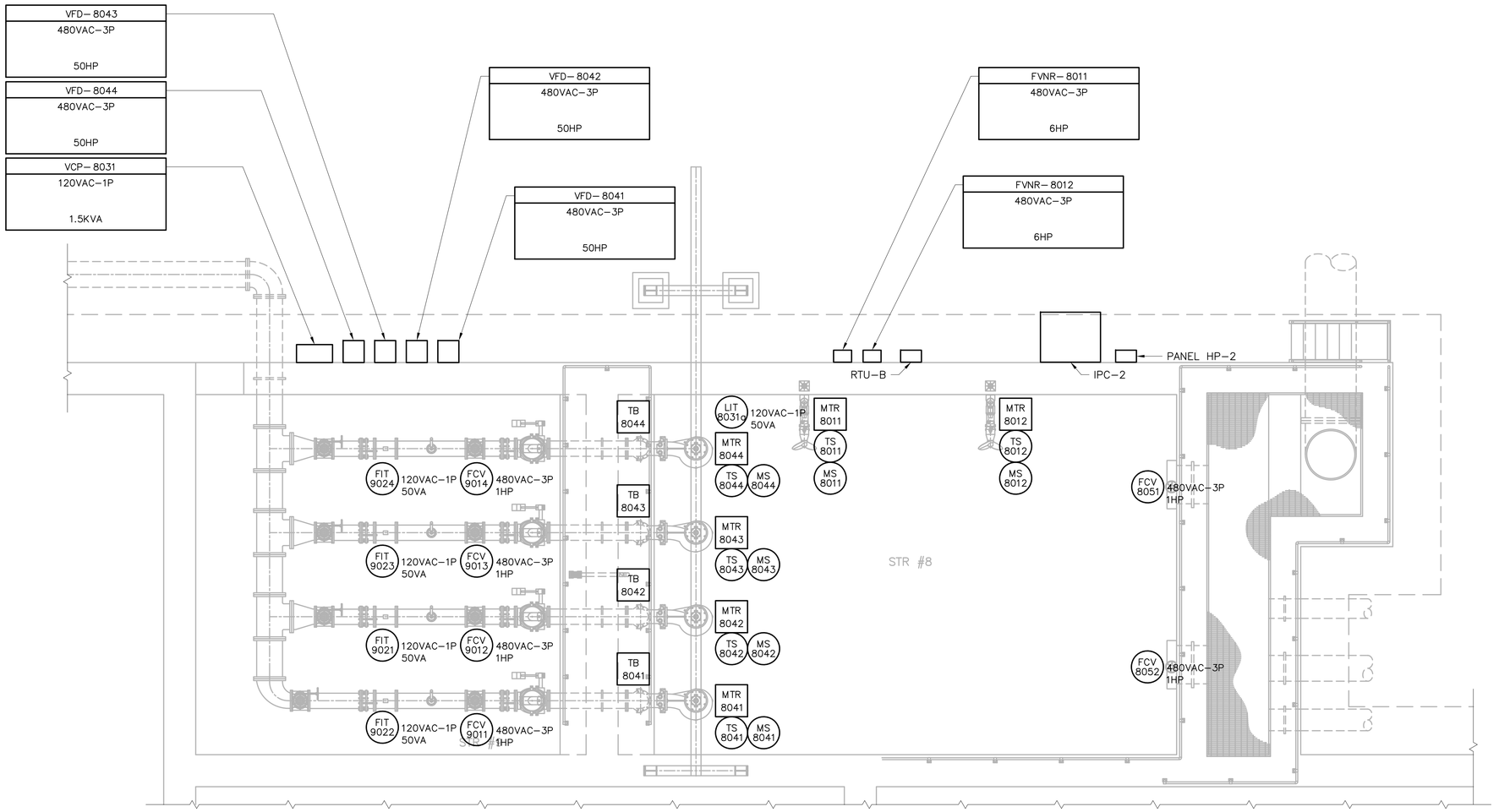

1 **PRE EQ I&C PLAN**
SCALE: 3/16" = 1'–0"

P:\PRODUCTION\PROJECTS\WALL ENGINEERING (WE)\WE–055 SHAWNEE NORTHSIDE WASTEWATER TREATMENT PLANT\DWG\EC1.DWG
6/3/2022 12:53 PM

WALL ENGINEERING
PO BOX 1457, DURANT, OK 74702
OKLAHOMA CA #5413 EXP. JUNE 30, 2023

SUBMITTAL / REVISIONS:

DATE	BY	SUBMITTAL / REVISION
.	.	.
.	.	.
.	.	.
.	.	.
.	.	.
.	.	.
.	.	.

SHAWNEE MUNICIPAL AUTHORITY
WASTEWATER SYSTEM IMPROVEMENTS
SHAWNEE, OKLAHOMA

ELECTRICAL
PRE–EQUALIZATION BASIN
I & C PLAN

PROJECT NO.	SHN–20–01
DATE	06/22
DRAWN BY:	CD
CHECKED BY:	BB
REVIEWED BY:	BB
SCALE:	AS SHOWN

BAR IS ONE INCH ON ORIGINAL DRAWING
0' 1'
IF NOT ONE INCH ON THIS SHEET, ADJUST SCALES ACCORDINGLY

REGISTERED PROFESSIONAL ENGINEER
BRUCE BROWN
20995
06-01-2022
OKLAHOMA

BROWN ENGINEERS
501-448-0100

SHEET
EC1

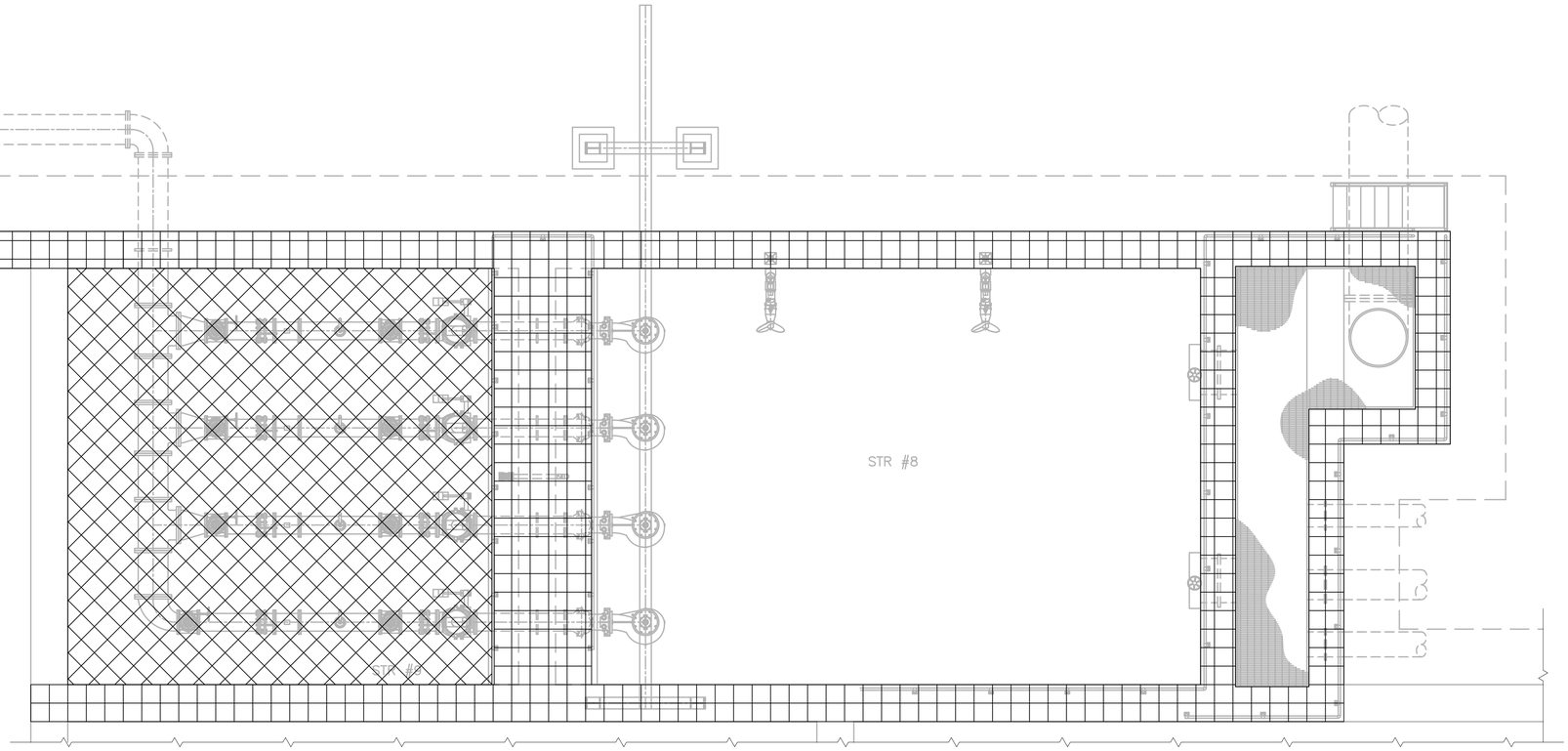

HATCH REGION LEGEND:

- INSTALL CONDUIT BELOW GRADE ONLY
- INSTALL CONDUIT EMBEDDED IN CONCRETE STRUCTURE ONLY
- INSTALL CONDUIT ON VERTICAL OR HORIZONTAL SURFACE ONLY (AVOID TRIPPING HAZARD) CONDUIT BELOW SLAB NOT ALLOWED
- OPEN STRUCTURE, CONDUIT INSTALLATION NOT ALLOWED

WALL ENGINEERING
PO BOX 1457, DURANT, OK 74702
OKLAHOMA CA #5413 EXP. JUNE 30, 2023

SUBMITTAL / REVISIONS:

DATE	BY	SUBMITTAL / REVISION
.	.	.
.	.	.
.	.	.
.	.	.
.	.	.
.	.	.
.	.	.
.	.	.

SHAWNEE MUNICIPAL AUTHORITY
WASTEWATER SYSTEM IMPROVEMENTS
SHAWNEE, OKLAHOMA

ELECTRICAL
PRE-EQUALIZATION BASIN
CONDUIT ROUTING PLAN

PROJECT NO.
SHN-20-01
DATE
06/22
DRAWN BY:
CD
CHECKED BY:
BB
REVIEWED BY:
BB
SCALE:
AS SHOWN

BAR IS ONE INCH ON ORIGINAL DRAWING
0" 1"
IF NOT ONE INCH ON THIS SHEET, ADJUST SCALES ACCORDINGLY

SHEET
EC2

REGISTERED PROFESSIONAL ENGINEER
BRUCE W. BROWN
20995
OKLAHOMA
06-01-2022

BROWN ENGINEERS
501-448-0100

P:\PRODUCTION\PROJECTS\WALL ENGINEERING (WE)\WE-055 SHAWNEE NORTHSIDE WASTEWATER TREATMENT PLANT\DWG\EC2.DWG
5/20/2022 8:46 AM

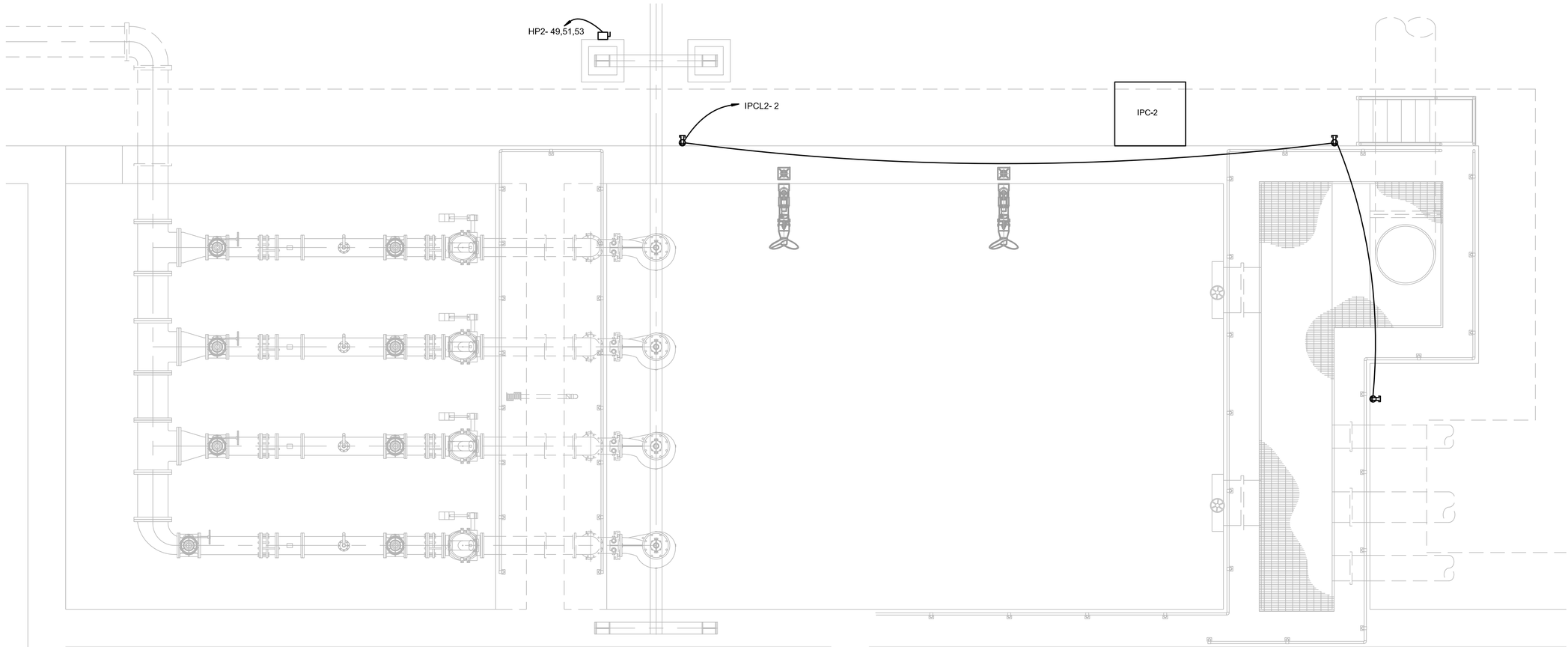

1 PRE EQ FACILITY PLAN
SCALE: 1/4" = 1'-0"

WALL ENGINEERING
PO BOX 1457, DURANT, OK 74702
OKLAHOMA CA #5413 EXP. JUNE 30, 2023

SUBMITTAL / REVISIONS:

DATE	BY	SUBMITTAL / REVISION
.	.	.
.	.	.
.	.	.
.	.	.
.	.	.
.	.	.
.	.	.
.	.	.

SHAWNEE MUNICIPAL AUTHORITY
WASTEWATER SYSTEM IMPROVEMENTS
SHAWNEE, OKLAHOMA

ELECTRICAL
PRE EQ FACILITY PLAN

PROJECT NO.
SHN-20-01
DATE
06/22
DRAWN BY:
CD
CHECKED BY:
BB
REVIEWED BY:
BB
SCALE:
AS SHOWN

BAR IS ONE INCH ON ORIGINAL DRAWING
0" 1"
IF NOT ONE INCH ON THIS SHEET, ADJUST SCALES ACCORDINGLY

SHEET
EC3

REGISTERED PROFESSIONAL ENGINEER
BRUCE BROWN
20995
OKLAHOMA
BROWN ENGINEERS
501-448-0100

P:\PRODUCTION\PROJECTS\WALL ENGINEERING (WE)\WE-055 SHAWNEE NORTHSIDE WASTEWATER TREATMENT PLANT\DWG\EC3.DWG
5/20/2022 8:47 AM

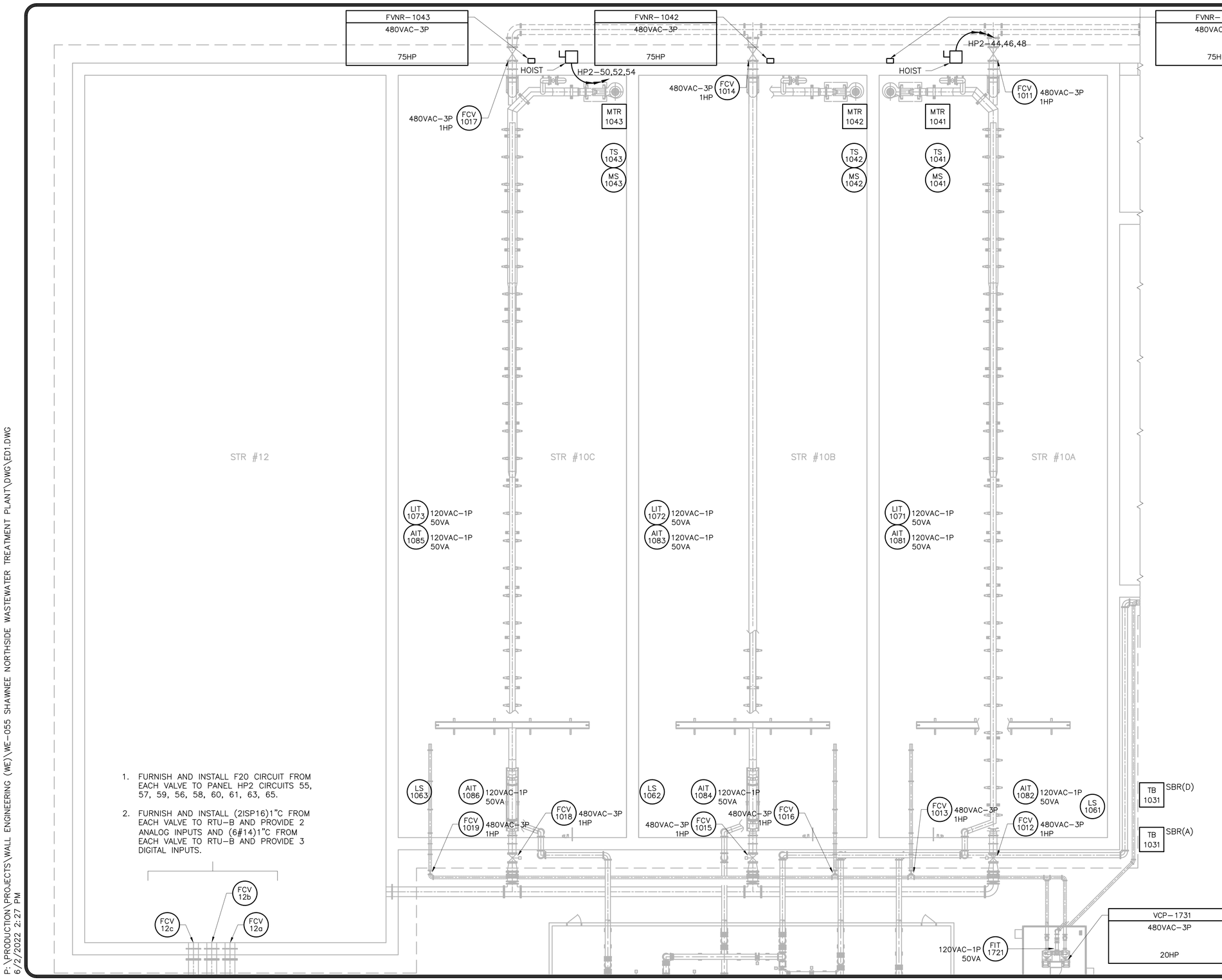

1. FURNISH AND INSTALL F20 CIRCUIT FROM EACH VALVE TO PANEL HP2 CIRCUITS 55, 57, 59, 56, 58, 60, 61, 63, 65.
2. FURNISH AND INSTALL (2ISP16)1"C FROM EACH VALVE TO RTU–B AND PROVIDE 2 ANALOG INPUTS AND (6#14)1"C FROM EACH VALVE TO RTU–B AND PROVIDE 3 DIGITAL INPUTS.

P:\PRODUCTION\PROJECTS\WALL ENGINEERING (WE)\WE–055 SHAWNEE NORTHSIDE WASTEWATER TREATMENT PLANT\DWG\ED1.DWG
6/2/2022 2:27 PM

WALL ENGINEERING
PO BOX 1457, DURANT, OK 74702
OKLAHOMA CA #5413 EXP. JUNE 30, 2023

SUBMITTAL / REVISIONS:

DATE	BY	SUBMITTAL / REVISION

SHAWNEE MUNICIPAL AUTHORITY
WASTEWATER SYSTEM IMPROVEMENTS
SHAWNEE, OKLAHOMA

ELECTRICAL SEQUENCING BATCH REACTOR I & C PLAN

PROJECT NO.	SHN–20–01
DATE	06/22
DRAWN BY:	CD
CHECKED BY:	BB
REVIEWED BY:	BB
SCALE:	AS SHOWN

BAR IS ONE INCH ON ORIGINAL DRAWING
0" 1"
IF NOT ONE INCH ON THIS SHEET, ADJUST SCALES ACCORDINGLY

SHEET
ED1



BROWN ENGINEERS
501-448-0100

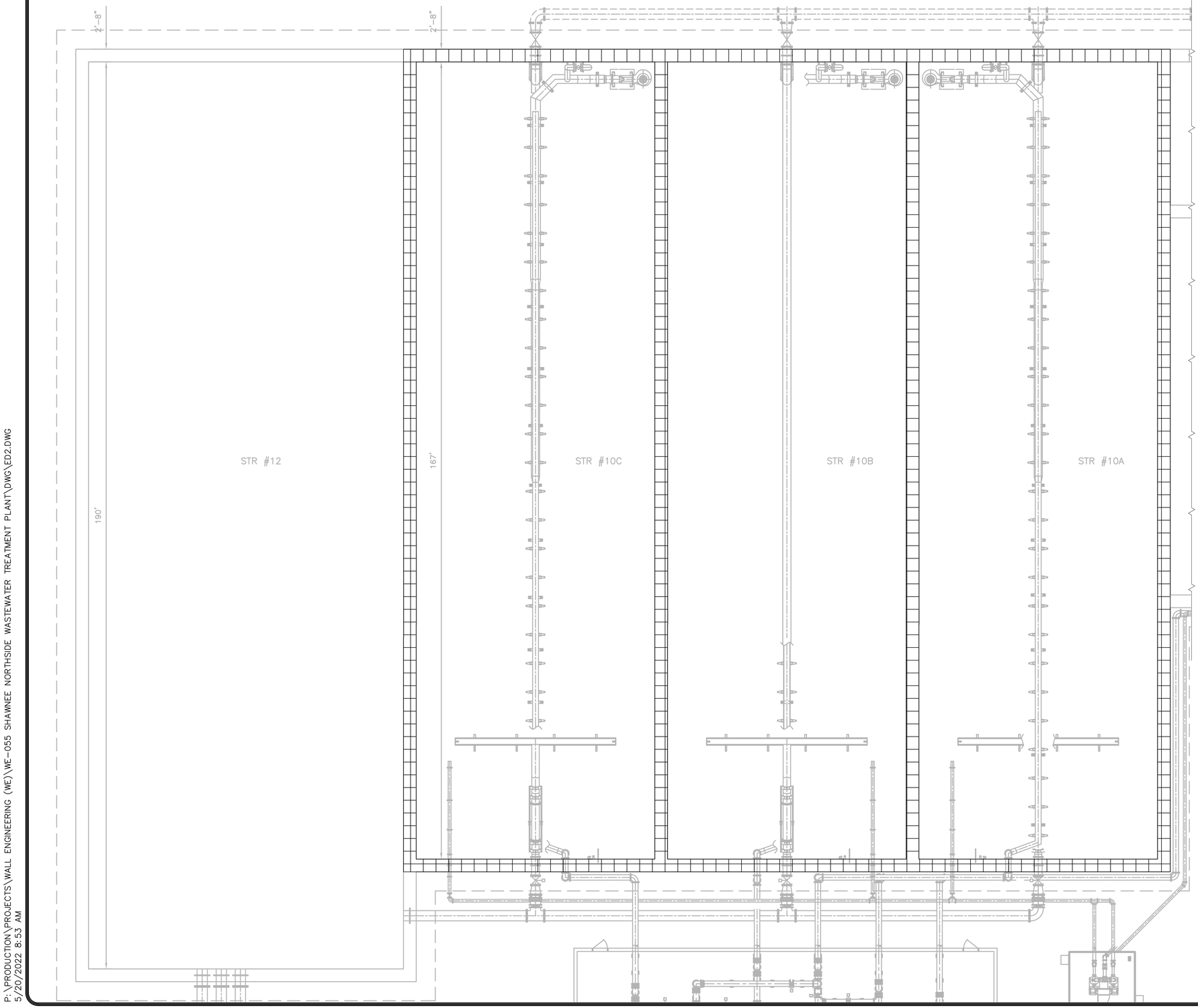

HATCH REGION LEGEND:

- INSTALL CONDUIT BELOW GRADE ONLY
- INSTALL CONDUIT EMBEDDED IN CONCRETE STRUCTURE ONLY
- INSTALL CONDUIT ON VERTICAL OR HORIZONTAL SURFACE ONLY (AVOID TRIPPING HAZARD) CONDUIT BELOW SLAB NOT ALLOWED
- OPEN STRUCTURE, CONDUIT INSTALLATION NOT ALLOWED

WALL ENGINEERING
PO BOX 1457, DURANT, OK 74702
OKLAHOMA CA #5413 EXP. JUNE 30, 2023

SUBMITTAL / REVISIONS:

DATE	BY	SUBMITTAL / REVISION
.	.	.
.	.	.
.	.	.
.	.	.
.	.	.
.	.	.
.	.	.

SHAWNEE MUNICIPAL AUTHORITY
WASTEWATER SYSTEM IMPROVEMENTS
SHAWNEE, OKLAHOMA

ELECTRICAL SEQUENCING BATCH REACTOR CONDUIT ROUTING PLAN

PROJECT NO.
SHN-20-01

DATE
06/22

DRAWN BY:
CD

CHECKED BY:
BB

REVIEWED BY:
BB

SCALE:
AS SHOWN

BAR IS ONE INCH ON ORIGINAL DRAWING
0" 1"
IF NOT ONE INCH ON THIS SHEET, ADJUST SCALES ACCORDINGLY

SHEET
ED2

REGISTERED PROFESSIONAL ENGINEER
BRUCE BROWN
20995
OKLAHOMA
06-01-2022

BROWN ENGINEERS
501-448-0100

P:\PRODUCTION\PROJECTS\WALL ENGINEERING (WE)\WE-055 SHAWNEE NORTHSIDE WASTEWATER TREATMENT PLANT\DWG\ED2.DWG
5/20/2022 8:53 AM

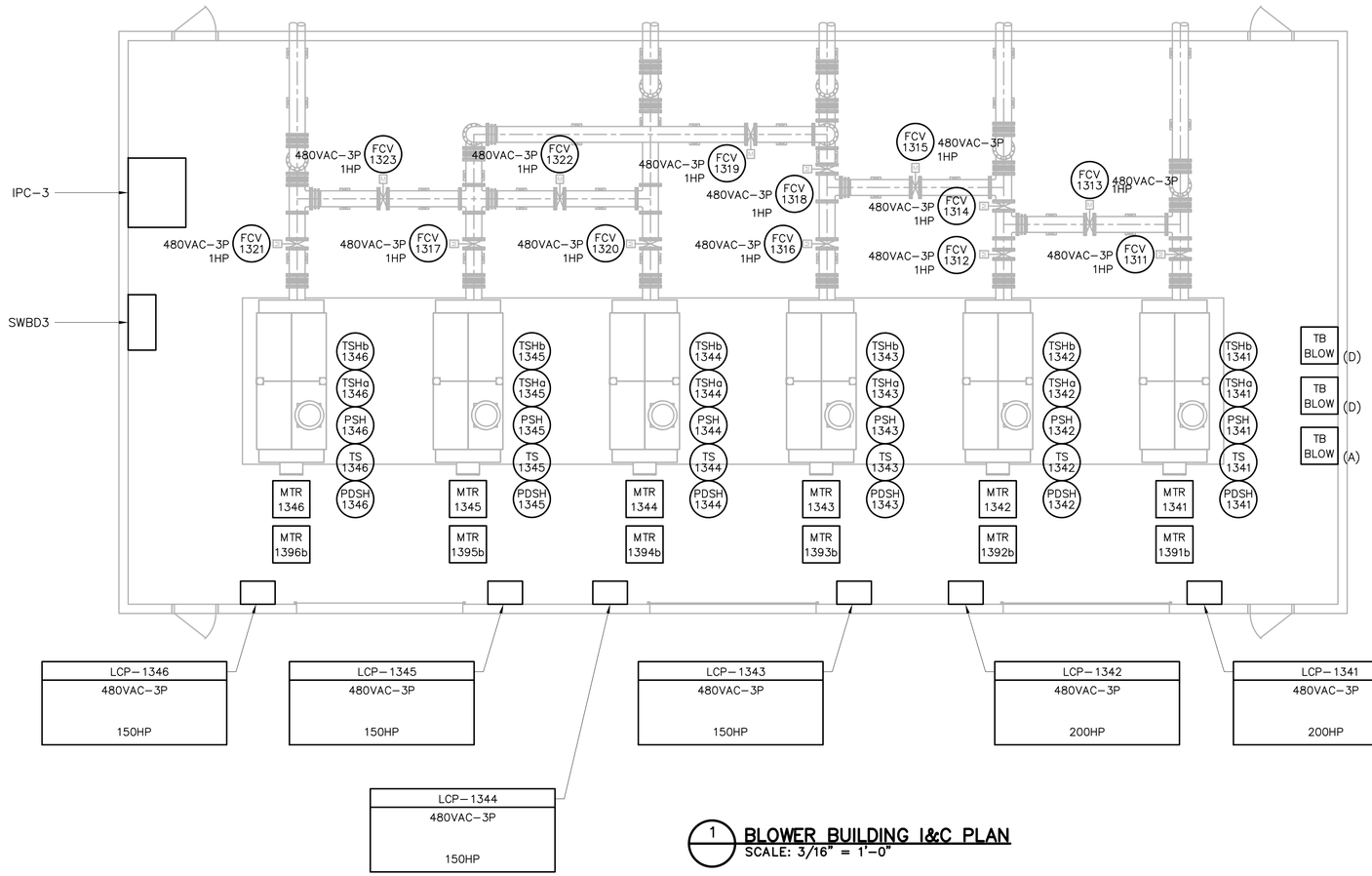

1 **BLOWER BUILDING I&C PLAN**
SCALE: 3/16" = 1'-0"

P:\PRODUCTION\PROJECTS\WALL ENGINEERING (WE)\WE-055 SHAWNEE NORTHSIDE WASTEWATER TREATMENT PLANT\DWG\EE1.DWG
5/20/2022 8:56 AM

WALL ENGINEERING
PO BOX 1457, DURANT, OK 74702
OKLAHOMA CA #5413 EXP. JUNE 30, 2023

SUBMITTAL / REVISIONS:

DATE	BY	SUBMITTAL / REVISION
.	.	.

SHAWNEE MUNICIPAL AUTHORITY
WASTEWATER SYSTEM IMPROVEMENTS
SHAWNEE, OKLAHOMA

ELECTRICAL
BLOWER BUILDING
I & C PLAN

PROJECT NO.
SHN-20-01
DATE
06/22
DRAWN BY:
CD
CHECKED BY:
BB
REVIEWED BY:
BB
SCALE:
AS SHOWN

BAR IS ONE INCH ON ORIGINAL DRAWING
0" 1"
IF NOT ONE INCH ON THIS SHEET, ADJUST SCALES ACCORDINGLY

SHEET
EE1

REGISTERED PROFESSIONAL ENGINEER
BRUCE BROWN
20995
OKLAHOMA
06-01-2022

BROWN ENGINEERS
501-448-0100

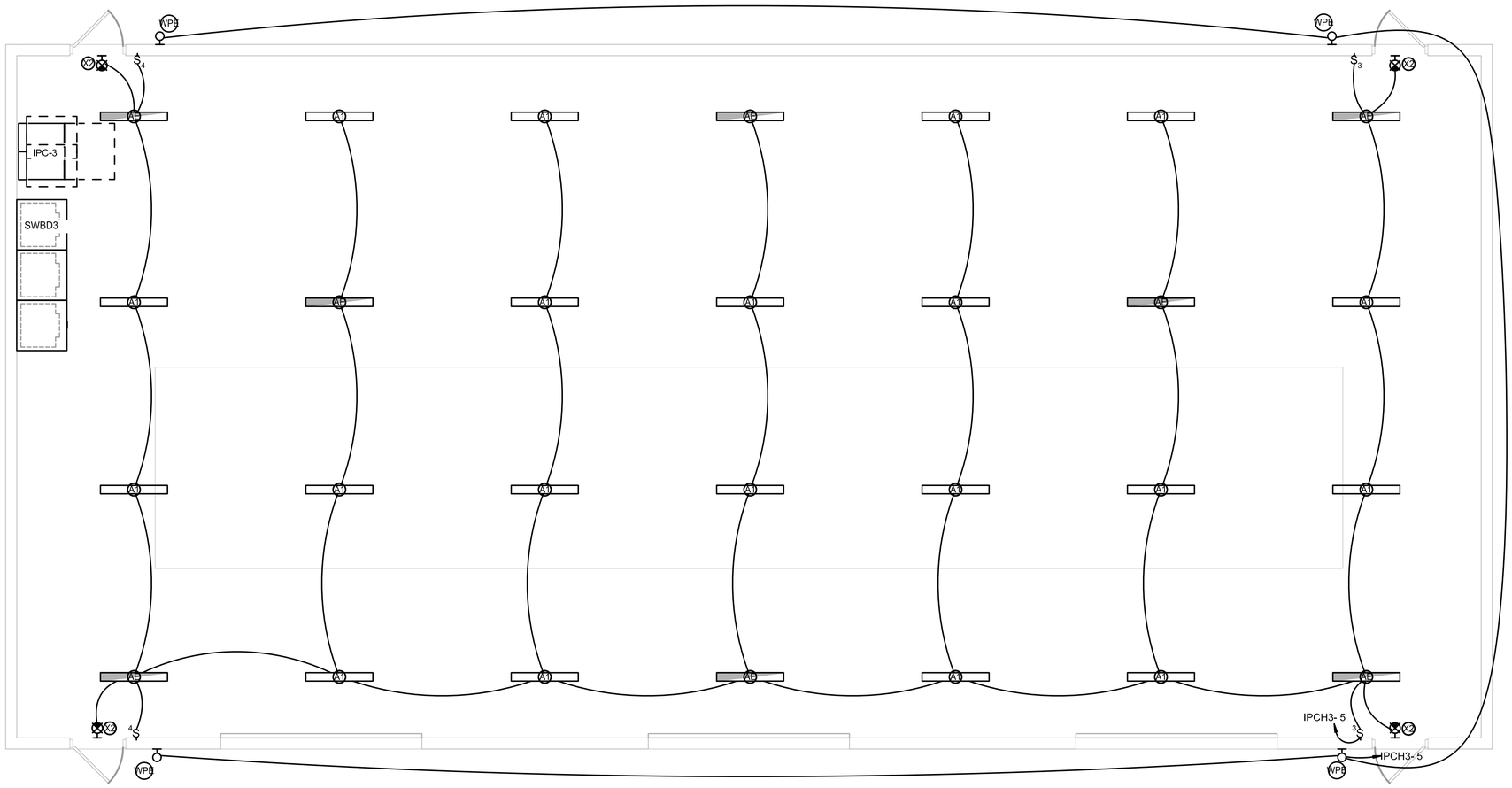

1 **BLOWER BUILDING LIGHTING PLAN**
SCALE: 1/4" = 1'-0"

P:\PRODUCTION\PROJECTS\WALL ENGINEERING (WE)\WE-055 SHAWNEE NORTHSIDE WASTEWATER TREATMENT PLANT\DWG\EE2.DWG
5/20/2022 8:57 AM

WALL ENGINEERING
PO BOX 1457, DURANT, OK 74702
OKLAHOMA CA #5413 EXP. JUNE 30, 2023

SUBMITTAL / REVISIONS:

DATE	BY	SUBMITTAL / REVISION
.	.	.
.	.	.
.	.	.
.	.	.
.	.	.
.	.	.
.	.	.
.	.	.

SHAWNEE MUNICIPAL AUTHORITY
WASTEWATER SYSTEM IMPROVEMENTS
SHAWNEE, OKLAHOMA

ELECTRICAL
BLOWER BUILDING LIGHTING PLAN

PROJECT NO.
SHN-20-01
DATE
06/22
DRAWN BY:
CD
CHECKED BY:
BB
REVIEWED BY:
BB
SCALE:
AS SHOWN

BAR IS ONE INCH ON ORIGINAL DRAWING
0" 1"
IF NOT ONE INCH ON THIS SHEET, ADJUST SCALES ACCORDINGLY

SHEET
EE2

REGISTERED PROFESSIONAL ENGINEER
BRUCE BROWN
20995
OKLAHOMA
06-01-2023

BROWN ENGINEERS
501-448-0100

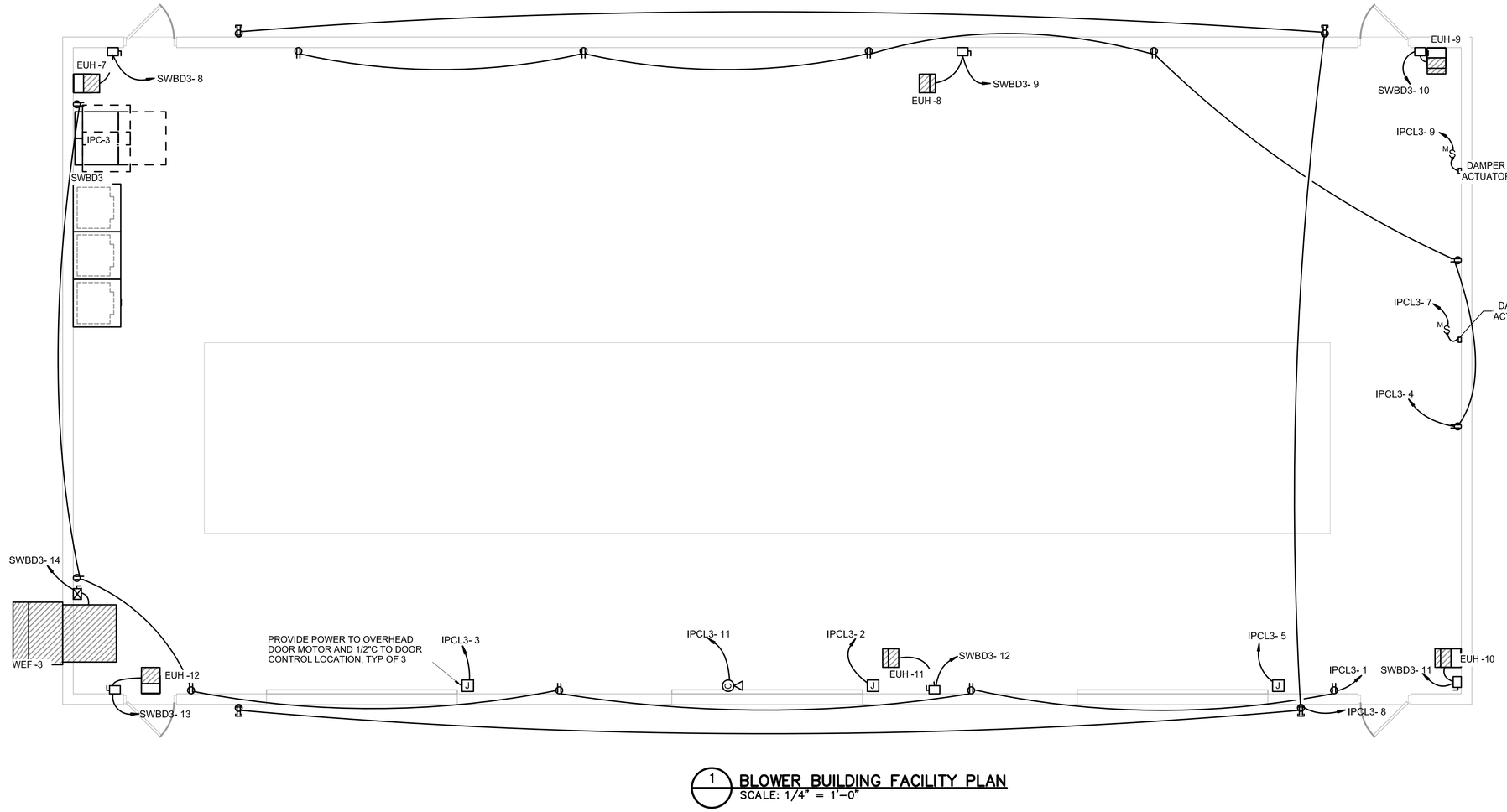

1 **BLOWER BUILDING FACILITY PLAN**
SCALE: 1/4" = 1'-0"

P:\PRODUCTION\PROJECTS\WALL ENGINEERING (WE)\WE-055 SHAWNEE NORTHSIDE WASTEWATER TREATMENT PLANT\DWG\EE3.DWG
5/20/2022 8:58 AM

WALL ENGINEERING
PO BOX 1457, DURANT, OK 74702
OKLAHOMA CA #5413 EXP. JUNE 30, 2023

SUBMITTAL / REVISIONS:

DATE	BY	SUBMITTAL / REVISION
.	.	.
.	.	.
.	.	.
.	.	.
.	.	.
.	.	.
.	.	.

SHAWNEE MUNICIPAL AUTHORITY
WASTEWATER SYSTEM IMPROVEMENTS
SHAWNEE, OKLAHOMA

ELECTRICAL
BLOWER BUILDING FACILITY PLAN

PROJECT NO.
SHN-20-01
DATE
06/22
DRAWN BY:
CD
CHECKED BY:
BB
REVIEWED BY:
BB
SCALE:
AS SHOWN

BAR IS ONE INCH ON ORIGINAL DRAWING
0" 1"
IF NOT ONE INCH ON THIS SHEET, ADJUST SCALES ACCORDINGLY

REGISTERED PROFESSIONAL ENGINEER
BRUCE W. BROWN
20995
06-01-2022
OKLAHOMA

BROWN ENGINEERS
501-448-0100

SHEET
EE3

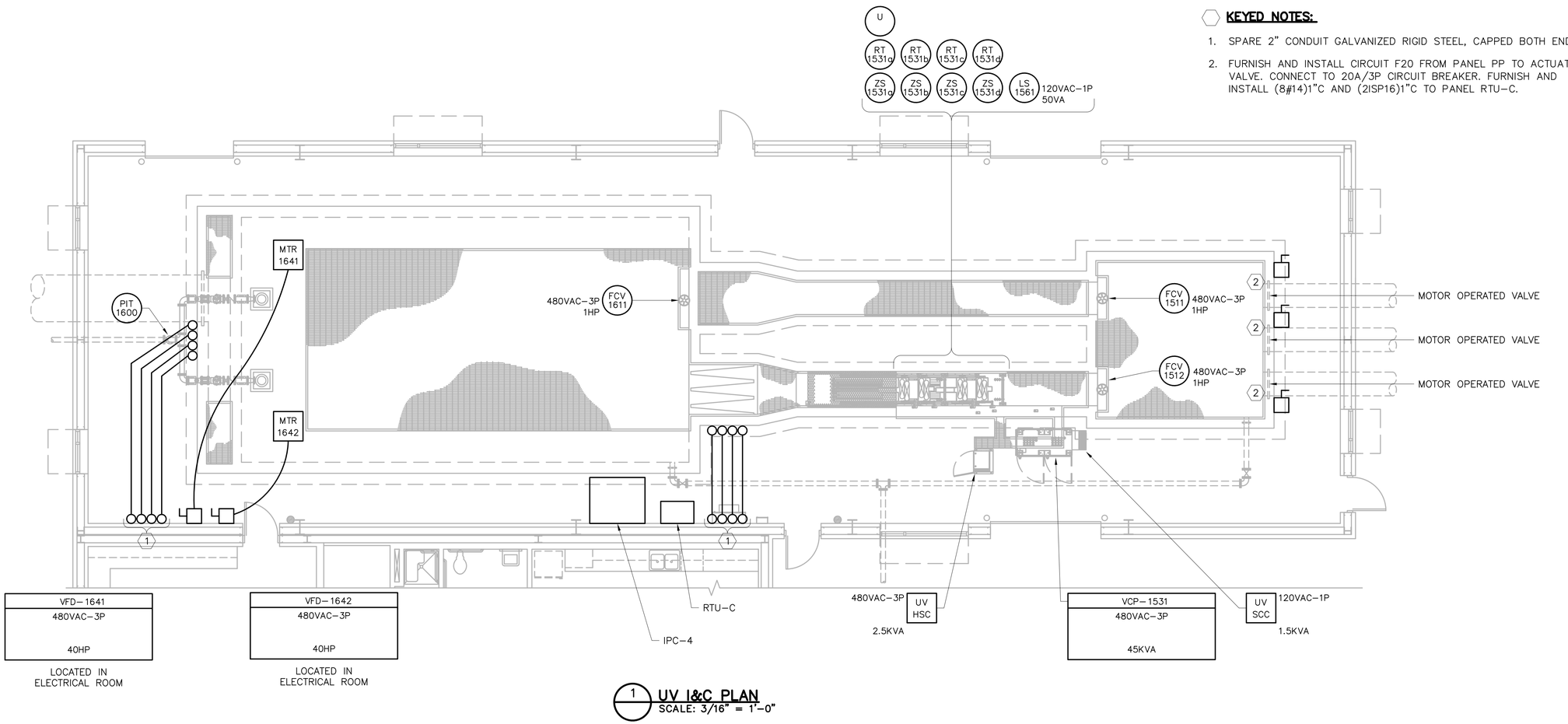

1 UV I&C PLAN
SCALE: 3/16" = 1'-0"

KEYED NOTES:

1. SPARE 2" CONDUIT GALVANIZED RIGID STEEL, CAPPED BOTH ENDS.
2. FURNISH AND INSTALL CIRCUIT F20 FROM PANEL PP TO ACTUATED VALVE. CONNECT TO 20A/3P CIRCUIT BREAKER. FURNISH AND INSTALL (8#14)1"C AND (2ISP16)1"C TO PANEL RTU-C.

WALL ENGINEERING
PO BOX 1457, DURANT, OK 74702
OKLAHOMA CA #5413 EXP. JUNE 30, 2023

SUBMITTAL / REVISIONS:

DATE	BY	SUBMITTAL / REVISION

SHAWNEE MUNICIPAL AUTHORITY
WASTEWATER SYSTEM IMPROVEMENTS
SHAWNEE, OKLAHOMA

ELECTRICAL
ULTRAVIOLET DISINFECTION SYSTEM
I & C PLAN

PROJECT NO.
SHN-20-01
DATE
06/22
DRAWN BY:
CD
CHECKED BY:
BB
REVIEWED BY:
BB
SCALE:
AS SHOWN

BAR IS ONE INCH ON ORIGINAL DRAWING
0' 1'
IF NOT ONE INCH ON THIS SHEET, ADJUST SCALES ACCORDINGLY

SHEET
EF1

REGISTERED PROFESSIONAL ENGINEER
BRUCE BROWN
20995
OKLAHOMA
06-01-2022

BROWN ENGINEERS
501-448-0100

P:\PRODUCTION\PROJECTS\WALL ENGINEERING (WE)\WE-055 SHAWNEE NORTHSIDE WASTEWATER TREATMENT PLANT\DWG\EF1.DWG
6/2/2022 2:50 PM

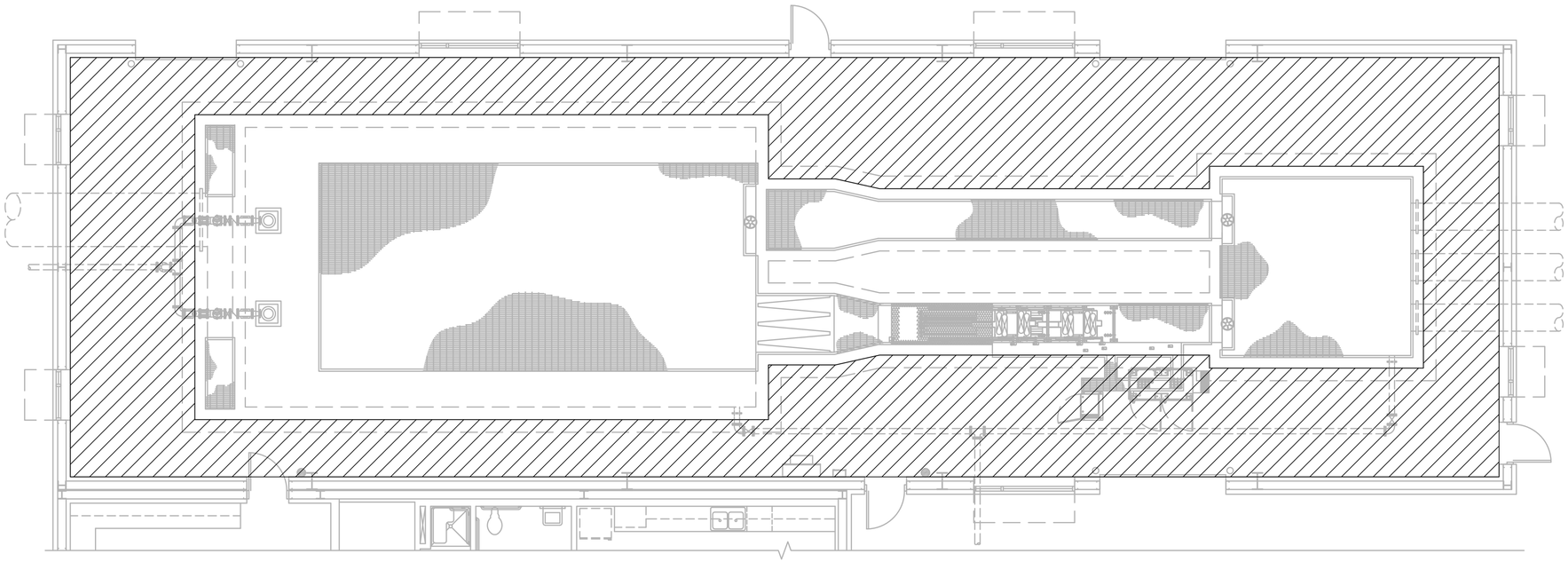

HATCH REGION LEGEND:

- INSTALL CONDUIT BELOW GRADE ONLY
- INSTALL CONDUIT EMBEDDED IN CONCRETE STRUCTURE ONLY
- INSTALL CONDUIT ON VERTICAL OR HORIZONTAL SURFACE ONLY (AVOID TRIPPING HAZARD) CONDUIT BELOW SLAB NOT ALLOWED
- OPEN STRUCTURE, CONDUIT INSTALLATION NOT ALLOWED

WALL ENGINEERING
PO BOX 1457, DURANT, OK 74702
OKLAHOMA CA #5413 EXP. JUNE 30, 2023

SUBMITTAL / REVISIONS:

DATE	BY	SUBMITTAL / REVISION
.	.	.

SHAWNEE MUNICIPAL AUTHORITY
WASTEWATER SYSTEM IMPROVEMENTS
SHAWNEE, OKLAHOMA

ELECTRICAL
ULTRAVIOLET DISINFECTION SYSTEM
CONDUIT ROUTING PLAN

PROJECT NO.
SHN-20-01

DATE
06/22

DRAWN BY:
CD

CHECKED BY:
BB

REVIEWED BY:
BB

SCALE:
AS SHOWN

BAR IS ONE INCH ON ORIGINAL DRAWING
0" 1"
IF NOT ONE INCH ON THIS SHEET, ADJUST SCALES ACCORDINGLY

SHEET

EF2

BROWN ENGINEERS
501-448-0100

P:\PRODUCTION\PROJECTS\WALL ENGINEERING (WE)\WE-055 SHAWNEE NORTHSIDE WASTEWATER TREATMENT PLANT\DWG\EF2.DWG
6/2/2022 2:54 PM

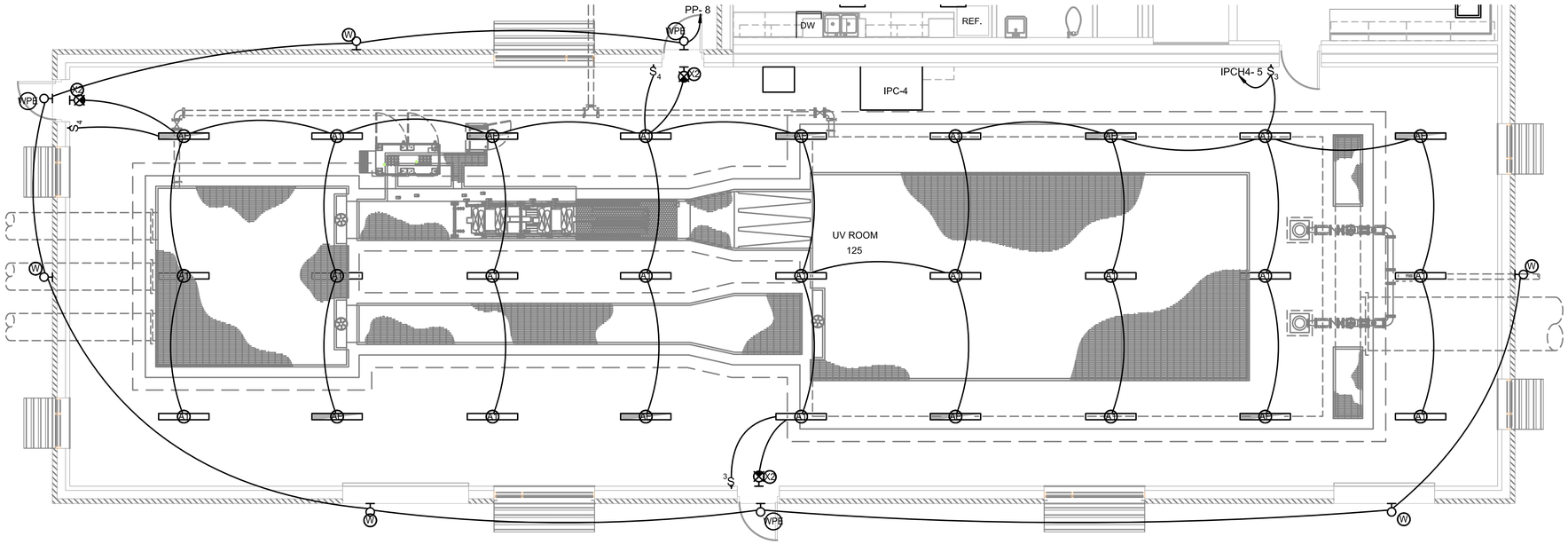

1 **UV LIGHTING PLAN**
SCALE: 3/16" = 1'-0"

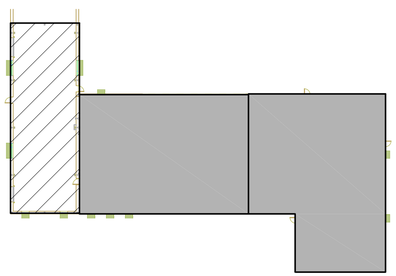

LIGHTING -- FIXTURE SCHEDULE

MARK	MANUFACTURER	MODEL NUMBER	DESCRIPTION	LAMPS TYPE	ELECTRICAL REQUIREMENTS WATTAGE	ELECTRICAL REQUIREMENTS VOLTAGE	COMMENTS
A1	AZZ	ML09LC4U	4' INDUSTRIAL STRIP	LED	72 W	277 V	MOUNT FIXTURE 16' AFF
A2	AZZ	XML14LC4U	4' INDUSTRIAL STRIP CLASS 1 DIV 1	LED	90 W	277 V	MOUNT FIXTURE 18' AFF
AE	AZZ	ML09LC4UEM	4' INDUSTRIAL STRIP W/ BATTERY BACKUP	LED	72 W	277 V	MOUNT FIXTURE 16' AFF
D1	COLUMBIA	LCAT24-35MLG-EDU	RECESSED DIRECT/INDIRECT 2X4	LED	36 W	120 V	
D2	COLUMBIA	LCAT24-35HLG-EDU	RECESSED DIRECT/INDIRECT 2X4	LED	49 W	120 V	
DE	COLUMBIA	LCAT24-35MLG-EDU-ELL14	RECESSED DIRECT/INDIRECT 2X4 W/ BATTERY BACKUP	LED	36 W	120 V	
F1	PRESCOLITE	LTR-4RD-H-SL10L-DM1_LTR-4RD-T-SL35K8WDS	RECESSED CAN	LED	12 W	120 V	
G1	COLUMBIA	MPS4-35ML-CW-EDU	4' INDUSTRIAL STRIP	LED	31 W	277 V	
GE	COLUMBIA	MPS4-35ML-CW-EDU-ELL14	4' INDUSTRIAL STRIP WITH BATTERY BACKUP	LED	31 W	277 V	
H2	COLUMBIA	CWM2-35MWxx-FRyy-EDU	4' INDUSTRIAL STRIP	LED	19 W	120 V	
S1	BEACON	VP-2-72L-145-4K7-2-UNV-A-(CBA)-PC/SSS-B-30-B-1-B3-(CBA)	POLE MOUNT SITE LIGHT	LED	145 W	277 V	
S2	BEACON	VP-2-72L-145-4K7-4W-UNV-A-(CBA)-PC/SSS-B-30-B-1-B3-(CBA)	POLE MOUNT SITE LIGHT	LED	145 W	277 V	
S3	BEACON	VP-2-72L-145-4K7-4W-UNV-A-(CBA)-PC/SSS-B-30-B-2-B3-(CBA)	DOUBLE POLE MOUNT SITE LIGHT	LED	290 W	277 V	
W	HUBBELL	LNC2-18L-4K-070-4-U-(CBA)-PCU	EXTERIOR WALL LIGHTING	LED	43 W	277 V	MOUNT FIXTURE 13' AFF
WE	HUBBELL	LNC2-18L-4K-070-4-U-(CBA)-PCU-E	EXTERIOR WALL LIGHTING W/ BATTERY BACKUP	LED	43 W	277 V	MOUNT FIXTURE 13' AFF
WPE	HUBBELL	LNC2-9L-4K-070-4-U-(CBA)-PCU-E	EXTERIOR WALL LIGHTING W/ BATTERY BACKUP	LED	29 W	277 V	MOUNT FIXTURE 13' AFF
X1	ISOLITE	EUG-AC-R-1C-MTEB	EXIT SIGN	LED	2 W	120 V	
X2	ISOLITE	DYN-6-4X	HAZARDOUS EXIT SIGN	LED	2 W	<varies>	

WALL ENGINEERING
PO BOX 1457, DURANT, OK 74702
OKLAHOMA CA #5413 EXP. JUNE 30, 2023

SUBMITTAL / REVISIONS:

DATE	BY	SUBMITTAL / REVISION
.	.	.
.	.	.
.	.	.
.	.	.
.	.	.
.	.	.

SHAWNEE MUNICIPAL AUTHORITY
WASTEWATER SYSTEM IMPROVEMENTS
SHAWNEE, OKLAHOMA

ELECTRICAL
UV LIGHTING PLAN

PROJECT NO.
SHN-20-01

DATE
06/22

DRAWN BY:
CD

CHECKED BY:
BB

REVIEWED BY:
BB

SCALE:
AS SHOWN

BAR IS ONE INCH ON ORIGINAL DRAWING
0" 1"
IF NOT ONE INCH ON THIS SHEET, ADJUST SCALES ACCORDINGLY

SHEET
EF3

REGISTERED PROFESSIONAL ENGINEER
BRUCE BROWN
20995
OKLAHOMA
06-01-2022
BROWN ENGINEERS
501-448-0100

P:\PRODUCTION\PROJECTS\WALL ENGINEERING (WE)\WE-055 SHAWNEE NORTHSIDE WASTEWATER TREATMENT PLANT\DWG\EF3.DWG
6/1/2022 9:33 AM

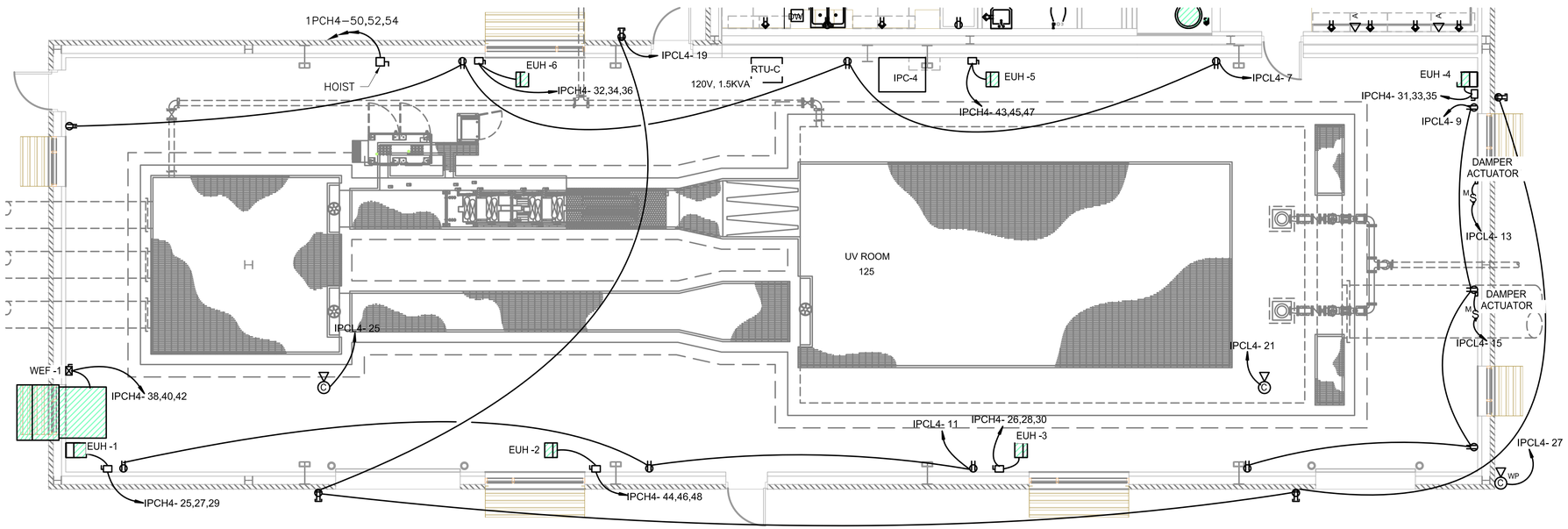

1 UV LIGHTING PLAN
SCALE: 3/16" = 1'-0"

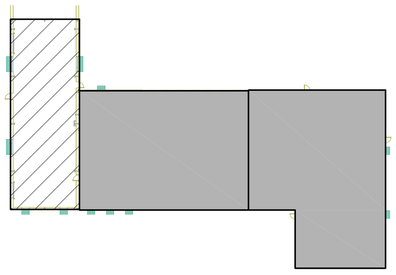

P:\PRODUCTION\PROJECTS\WALL ENGINEERING (WE)\WE-055 SHAWNEE NORTHSIDE WASTEWATER TREATMENT PLANT\DWG\EF4.DWG
5/20/2022 9:22 AM

WALL ENGINEERING
PO BOX 1457, DURANT, OK 74702
OKLAHOMA CA #5413 EXP. JUNE 30, 2023

SUBMITTAL / REVISIONS:

DATE	BY	SUBMITTAL / REVISION
. . . . .	. . . . .	. . . . .

SHAWNEE MUNICIPAL AUTHORITY
WASTEWATER SYSTEM IMPROVEMENTS
SHAWNEE, OKLAHOMA

ELECTRICAL
UV FACILITY PLAN

PROJECT NO.	SHN–20–01
DATE	06/22
DRAWN BY:	CD
CHECKED BY:	BB
REVIEWED BY:	BB
SCALE:	AS SHOWN

BAR IS ONE INCH ON ORIGINAL DRAWING
0" 1"
IF NOT ONE INCH ON THIS SHEET, ADJUST SCALES ACCORDINGLY

SHEET
EF4

REGISTERED PROFESSIONAL ENGINEER
BRUCE W. BROWN
20995
OKLAHOMA
06-01-2022

BROWN ENGINEERS
501-448-0100

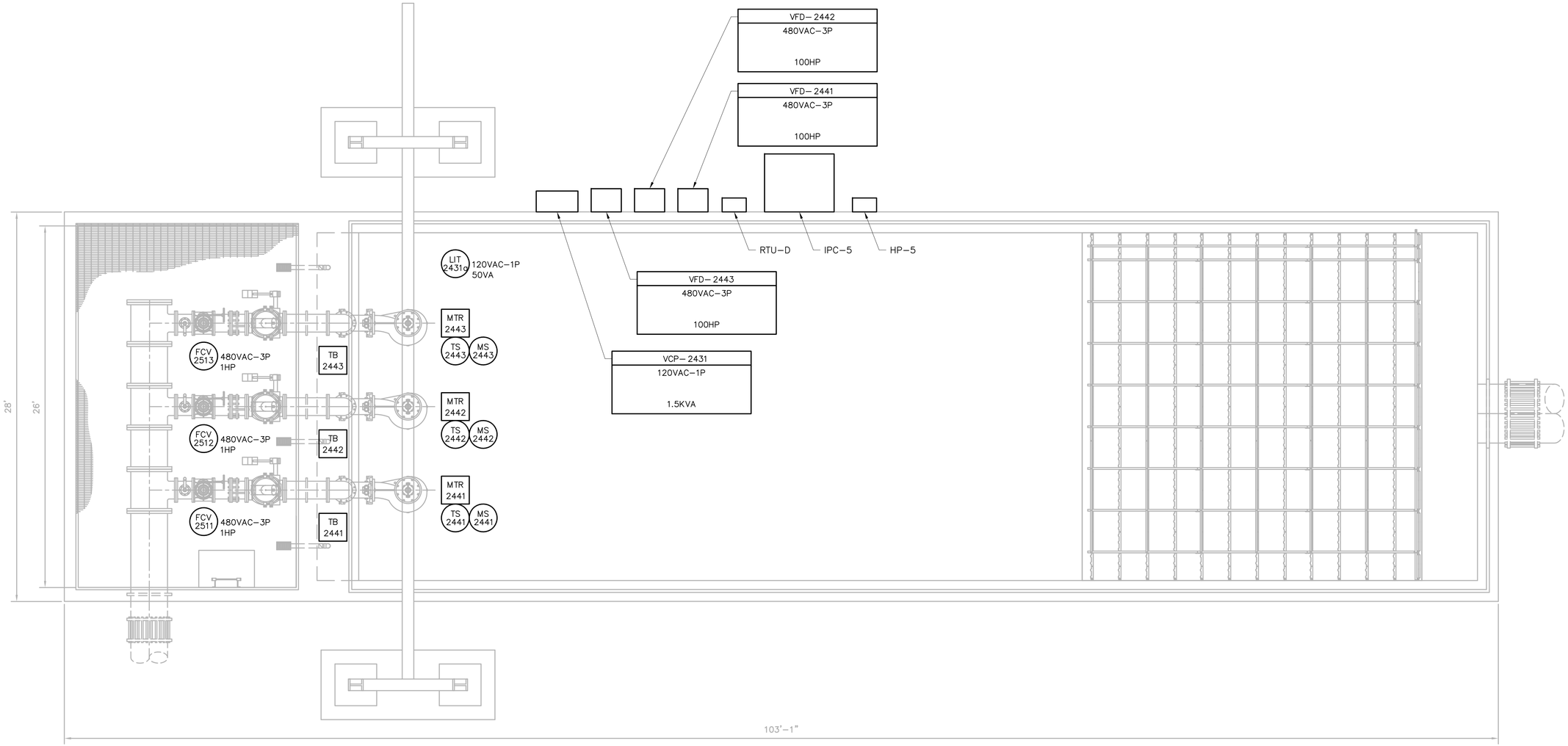

1 **EFFLUENT PUMP STATION I&C PLAN**
SCALE: 1/4" = 1'–0"

P:\PRODUCTION\PROJECTS\WALL ENGINEERING (WE)\WE–055 SHAWNEE NORTHSIDE WASTEWATER TREATMENT PLANT\DWG\EG1.DWG
5/20/2022 9:23 AM

WALL ENGINEERING
PO BOX 1457, DURANT, OK 74702
OKLAHOMA CA #5413 EXP. JUNE 30, 2023

SUBMITTAL / REVISIONS:

DATE	BY	SUBMITTAL / REVISION
.	.	.
.	.	.
.	.	.
.	.	.
.	.	.
.	.	.
.	.	.

SHAWNEE MUNICIPAL AUTHORITY
WASTEWATER SYSTEM IMPROVEMENTS
SHAWNEE, OKLAHOMA

ELECTRICAL
EFFLUENT LIFT STATION
I & C PLAN

PROJECT NO.
SHN–20–01
DATE
06/22
DRAWN BY:
CD
CHECKED BY:
BB
REVIEWED BY:
BB
SCALE:
AS SHOWN

BAR IS ONE INCH ON ORIGINAL DRAWING
0' 1'
IF NOT ONE INCH ON THIS SHEET, ADJUST SCALES ACCORDINGLY

SHEET
EG1

REGISTERED PROFESSIONAL ENGINEER
BRUCE BROWN
20995
OKLAHOMA
06-01-2022

BROWN ENGINEERS
501-448-0100

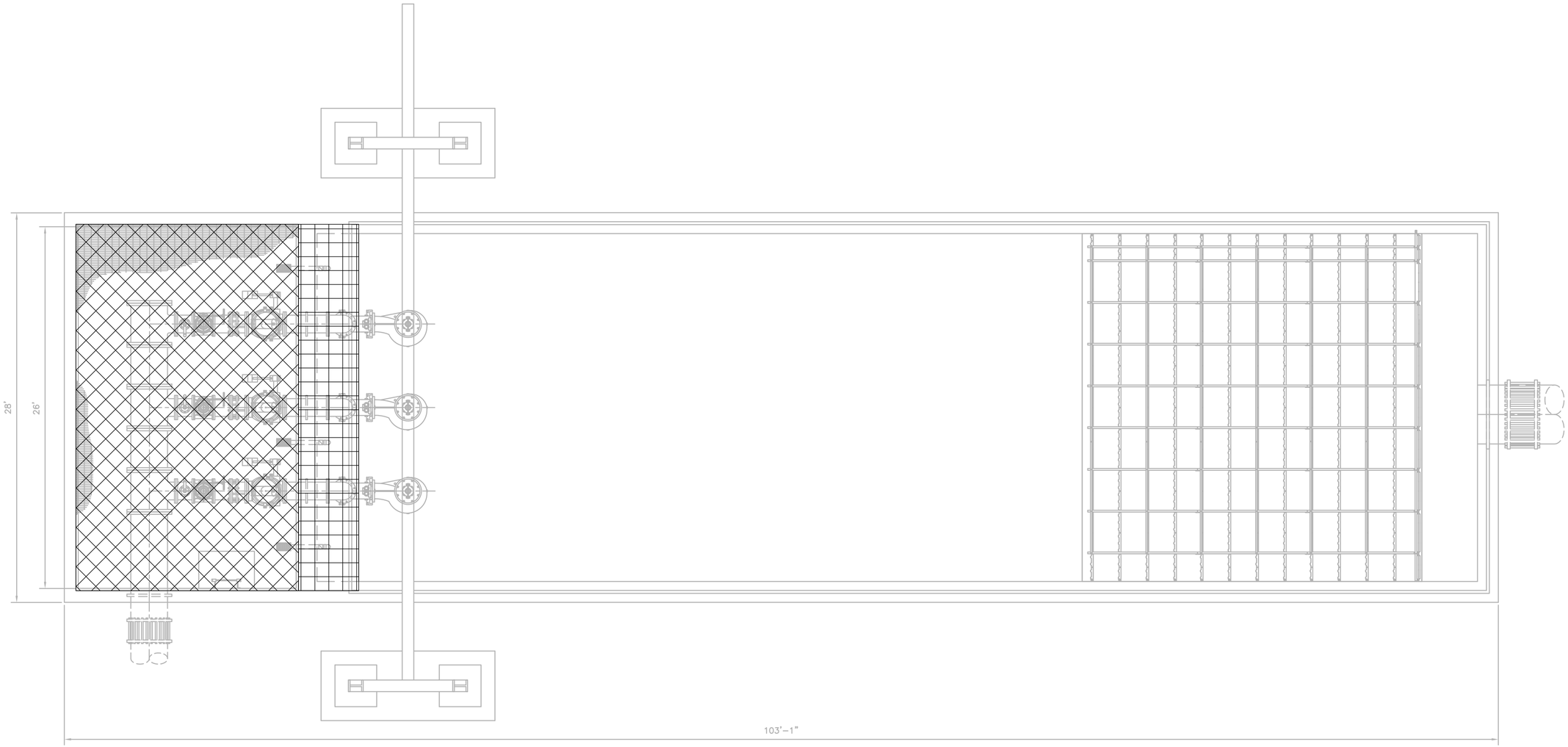

HATCH REGION LEGEND:

- INSTALL CONDUIT BELOW GRADE ONLY
- INSTALL CONDUIT EMBEDDED IN CONCRETE STRUCTURE ONLY
- INSTALL CONDUIT ON VERTICAL OR HORIZONTAL SURFACE ONLY (AVOID TRIPPING HAZARD) CONDUIT BELOW SLAB NOT ALLOWED
- OPEN STRUCTURE, CONDUIT INSTALLATION NOT ALLOWED

REGISTERED PROFESSIONAL ENGINEER
BRUCE BROWN
20995
OKLAHOMA
06-01-2022

BROWN ENGINEERS
501-448-0100

SUBMITTAL / REVISIONS:

DATE	BY	SUBMITTAL / REVISION
.	.	.
.	.	.
.	.	.
.	.	.
.	.	.
.	.	.
.	.	.
.	.	.

WALL ENGINEERING
PO BOX 1457, DURANT, OK 74702
OKLAHOMA CA #5413 EXP. JUNE 30, 2023

SHAWNEE MUNICIPAL AUTHORITY
WASTEWATER SYSTEM IMPROVEMENTS
SHAWNEE, OKLAHOMA

ELECTRICAL
EFFLUENT LIFT STATION
CONDUIT ROUTING PLAN

PROJECT NO.
SHN–20–01

DATE
06/22

DRAWN BY:
CD

CHECKED BY:
BB

REVIEWED BY:
BB

SCALE:
AS SHOWN

BAR IS ONE INCH ON ORIGINAL DRAWING
0" 1"
IF NOT ONE INCH ON THIS SHEET, ADJUST SCALES ACCORDINGLY

SHEET

EG2

P:\PRODUCTION\PROJECTS\WALL ENGINEERING (WE)\WE–055 SHAWNEE NORTHSIDE WASTEWATER TREATMENT PLANT\DWG\EG2.DWG
5/20/2022 9:24 AM

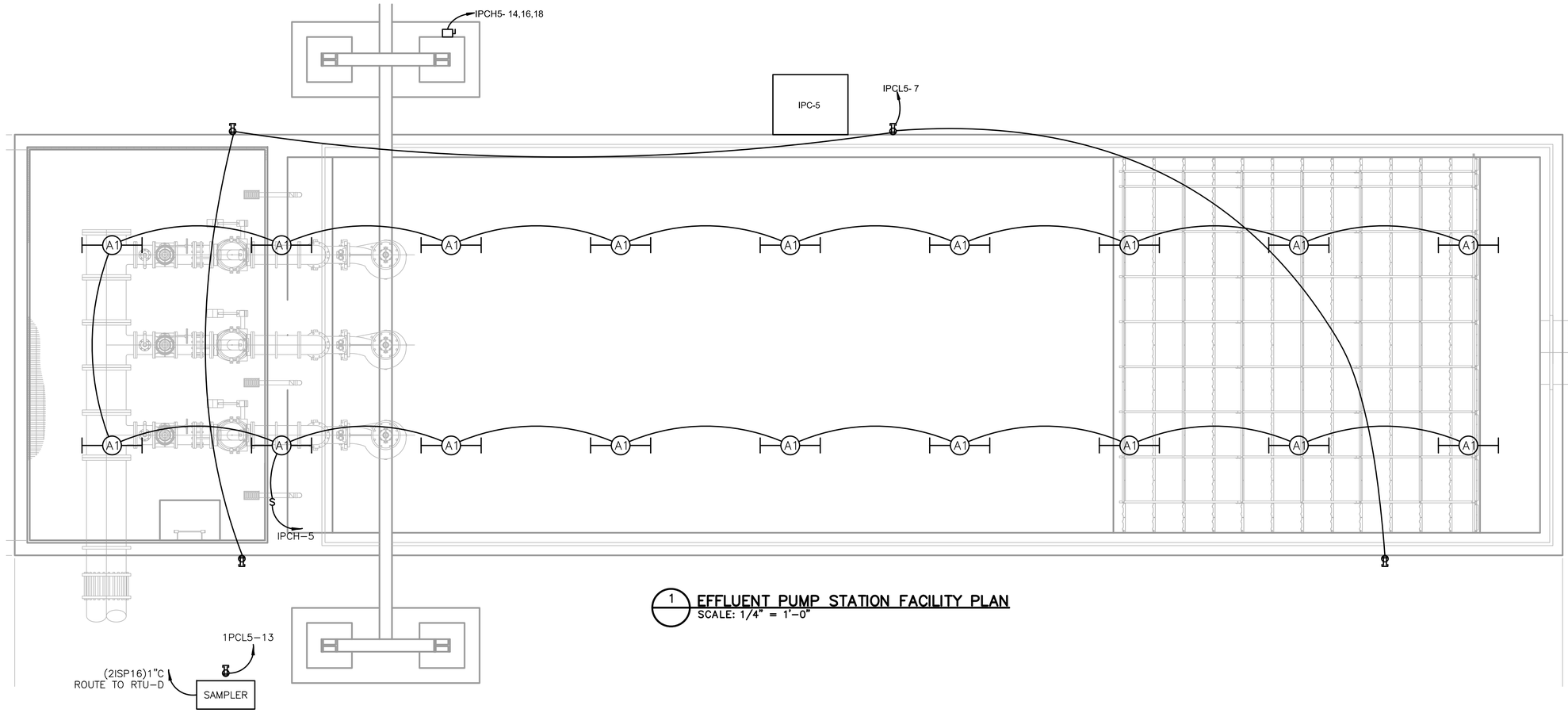

1 EFFLUENT PUMP STATION FACILITY PLAN
SCALE: 1/4" = 1'-0"

P:\PRODUCTION\PROJECTS\WALL ENGINEERING (WE)\WE-055 SHAWNEE NORTHSIDE WASTEWATER TREATMENT PLANT\DWG\EG3.DWG
6/1/2022 9:57 AM

WALL ENGINEERING
PO BOX 1457, DURANT, OK 74702
OKLAHOMA CA #5413 EXP. JUNE 30, 2023

SUBMITTAL / REVISIONS:

DATE	BY	SUBMITTAL / REVISION
.	.	.
.	.	.
.	.	.
.	.	.
.	.	.
.	.	.
.	.	.

SHAWNEE MUNICIPAL AUTHORITY
WASTEWATER SYSTEM IMPROVEMENTS
SHAWNEE, OKLAHOMA

ELECTRICAL
EFFLUENT PS FACILITY PLAN

PROJECT NO.
SHN-20-01
DATE
06/22
DRAWN BY:
CD
CHECKED BY:
BB
REVIEWED BY:
BB
SCALE:
AS SHOWN

BAR IS ONE INCH ON ORIGINAL DRAWING
0' 1'
IF NOT ONE INCH ON THIS SHEET, ADJUST SCALES ACCORDINGLY

REGISTERED PROFESSIONAL ENGINEER
BRUCE BROWN
20995
OKLAHOMA
06-01-2022

BROWN ENGINEERS
501-448-0100

SHEET
EG3

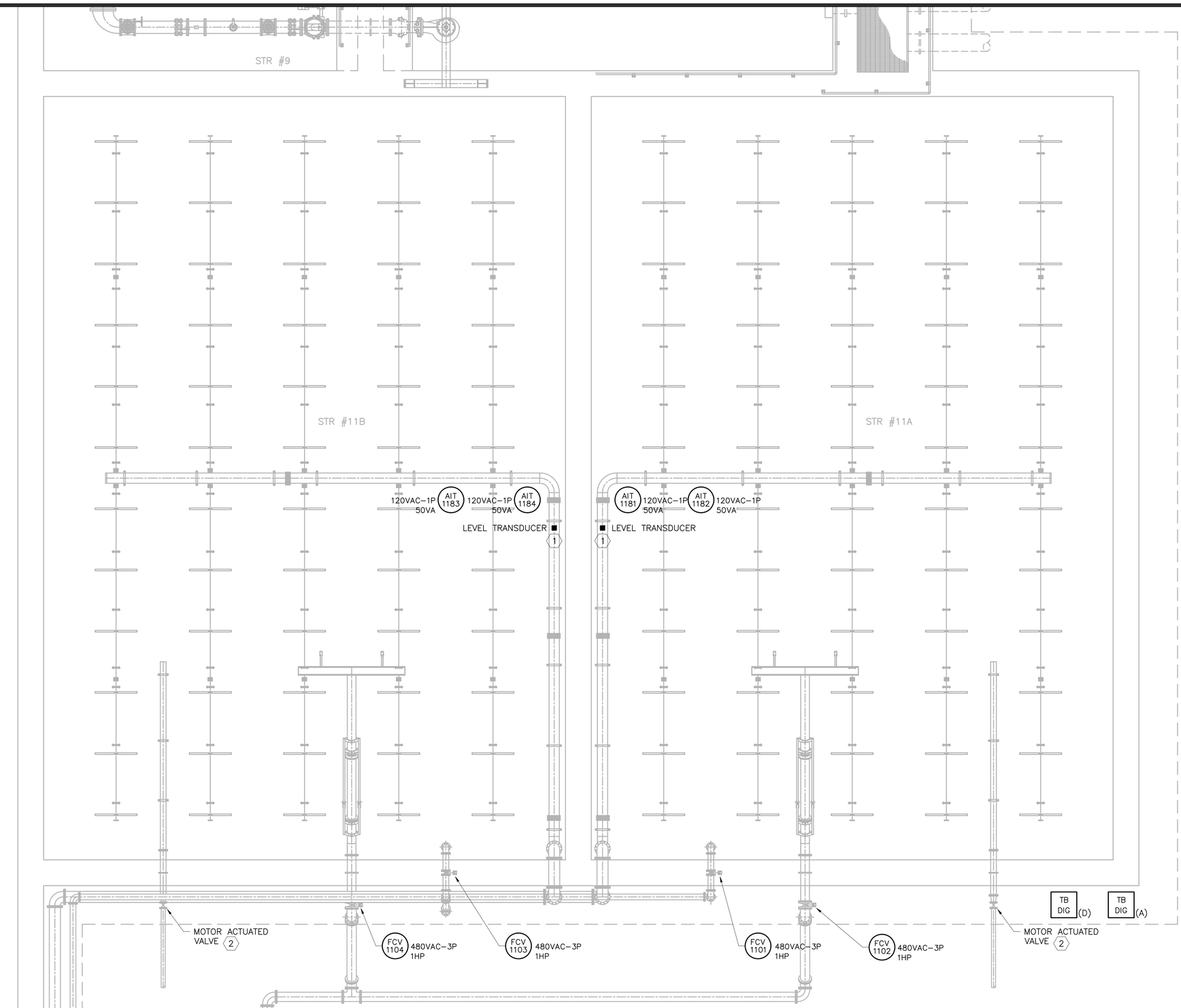

KEYED NOTES:

1. FURNISH AND INSTALL CIRCUIT 1F20N FROM PANEL IPCL2 TO LEVEL TRANSDUCER. CONNECT TO 20A/1P CIRCUIT BREAKER. FURNISH AND INSTALL (1ISP16)1"C FROM MAG METER TO PANEL RTU–B.
2. FURNISH AND INSTALL CIRCUIT F20 FROM PANEL HP–2 TO ACTUATED VALVE. CONNECT TO 20A/3P CIRCUIT BREAKER. FURNISH AND INSTALL (8#14)1"C AND (2ISP16)1"C TO PANEL RTU–B

WALL ENGINEERING
PO BOX 1457, DURANT, OK 74702
OKLAHOMA CA #5413 EXP. JUNE 30, 2023

SUBMITTAL / REVISIONS:

DATE	BY	SUBMITTAL / REVISION
.	.	.
.	.	.
.	.	.
.	.	.
.	.	.
.	.	.
.	.	.
.	.	.

SHAWNEE MUNICIPAL AUTHORITY
WASTEWATER SYSTEM IMPROVEMENTS
SHAWNEE, OKLAHOMA

ELECTRICAL
AEROBIC DIGESTER
I & C PLAN

PROJECT NO.	SHN–20–01
DATE	06/22
DRAWN BY:	CD
CHECKED BY:	BB
REVIEWED BY:	BB
SCALE:	AS SHOWN

BAR IS ONE INCH ON ORIGINAL DRAWING
0" 1"
IF NOT ONE INCH ON THIS SHEET, ADJUST SCALES ACCORDINGLY

SHEET

EH1



BROWN ENGINEERS
501-448-0100

P:\PRODUCTION\PROJECTS\WALL ENGINEERING (WE)\WE-055 SHAWNEE NORTHSIDE WASTEWATER TREATMENT PLANT\DWG\EH1.DWG
6/2/2022 3:25 PM

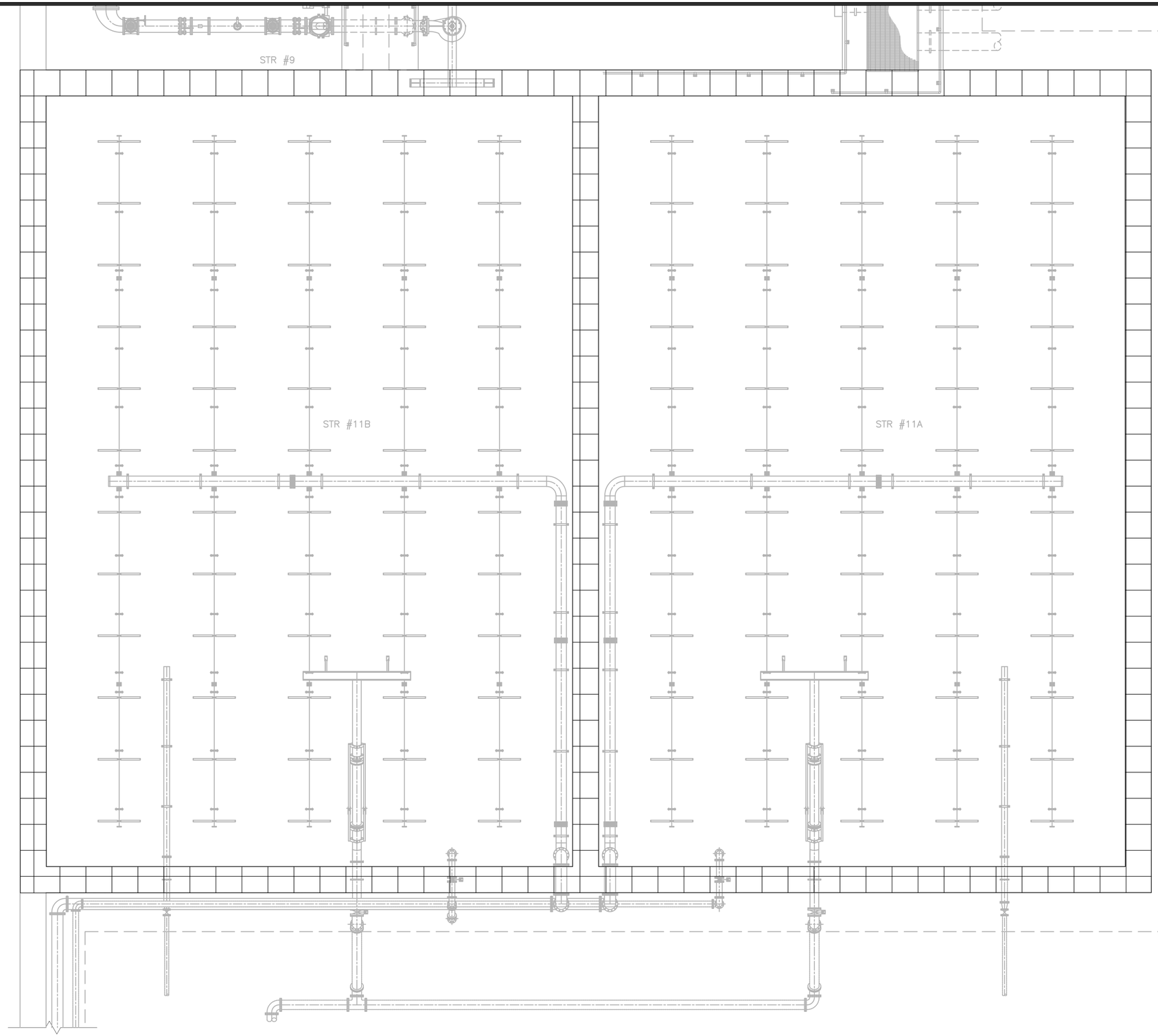

HATCH REGION LEGEND:

- INSTALL CONDUIT BELOW GRADE ONLY
- INSTALL CONDUIT EMBEDDED IN CONCRETE STRUCTURE ONLY
- INSTALL CONDUIT ON VERTICAL OR HORIZONTAL SURFACE ONLY (AVOID TRIPPING HAZARD) CONDUIT BELOW SLAB NOT ALLOWED
- OPEN STRUCTURE, CONDUIT INSTALLATION NOT ALLOWED

WALL ENGINEERING
PO BOX 1457, DURANT, OK 74702
OKLAHOMA CA #5413 EXP. JUNE 30, 2023

SUBMITTAL / REVISIONS:

DATE	BY	SUBMITTAL / REVISION
.	.	.
.	.	.
.	.	.
.	.	.
.	.	.
.	.	.
.	.	.

SHAWNEE MUNICIPAL AUTHORITY
WASTEWATER SYSTEM IMPROVEMENTS
SHAWNEE, OKLAHOMA

ELECTRICAL AEROBIC DIGESTER CONDUIT ROUTING PLAN

PROJECT NO.
SHN–20–01

DATE
06/22

DRAWN BY:
CD

CHECKED BY:
BB

REVIEWED BY:
BB

SCALE:
AS SHOWN

BAR IS ONE INCH ON ORIGINAL DRAWING
0" 1"
IF NOT ONE INCH ON THIS SHEET, ADJUST SCALES ACCORDINGLY

SHEET

EH2

REGISTERED PROFESSIONAL ENGINEER
BRUCE BROWN
20995
OKLAHOMA
06-01-2022

BROWN ENGINEERS
501-448-0100

P:\PRODUCTION\PROJECTS\WALL ENGINEERING (WE)\WE-055 SHAWNEE NORTHSIDE WASTEWATER TREATMENT PLANT\DWG\EH2.DWG
5/20/2022 9:39 AM

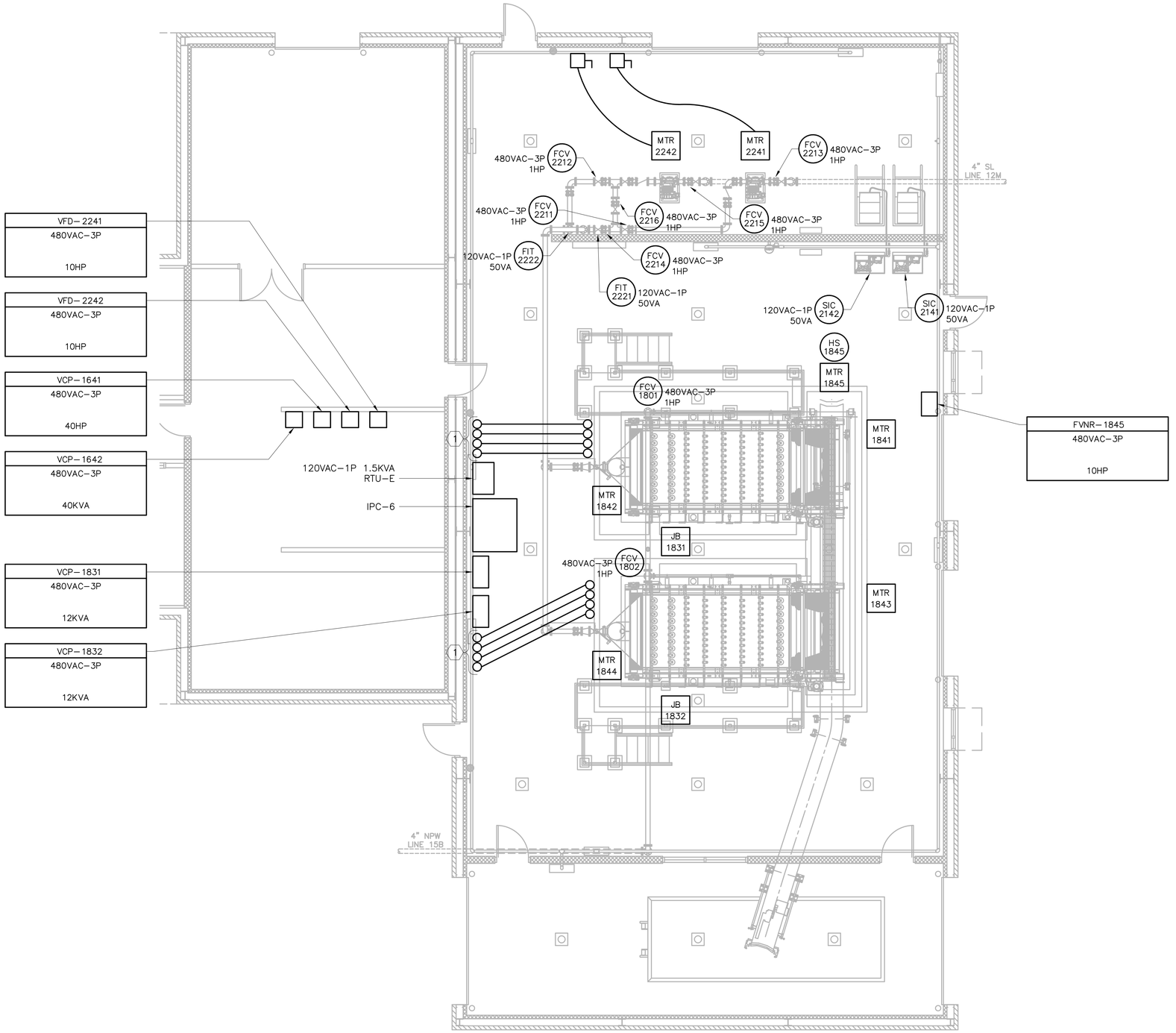

1 SLUDGE HANDLING I & C PLAN
SCALE: 3/16" = 1'-0"

KEYED NOTES:

1. SPARE 2" CONDUIT GALVANIZED RIGID STEEL, CAPPED BOTH ENDS

P:\PRODUCTION\PROJECTS\WALL ENGINEERING (WE)\WE-055 SHAWNEE NORTHSIDE WASTEWATER TREATMENT PLANT\DWG\EJ1.DWG
6/1/2022 10:52 AM

WALL ENGINEERING
PO BOX 1457, DURANT, OK 74702
OKLAHOMA CA #5413 EXP. JUNE 30, 2023

SUBMITTAL / REVISIONS:

DATE	BY	SUBMITTAL / REVISION
.	.	.
.	.	.
.	.	.
.	.	.
.	.	.
.	.	.
.	.	.

SHAWNEE MUNICIPAL AUTHORITY
WASTEWATER SYSTEM IMPROVEMENTS
SHAWNEE, OKLAHOMA

ELECTRICAL
SLUDGE HANDLING FACILITY
I & C PLAN

PROJECT NO.	SHN–20–01
DATE	06/22
DRAWN BY:	CD
CHECKED BY:	BB
REVIEWED BY:	BB
SCALE:	AS SHOWN

BAR IS ONE INCH ON ORIGINAL DRAWING
0" 1"
IF NOT ONE INCH ON THIS SHEET, ADJUST SCALES ACCORDINGLY

REGISTERED PROFESSIONAL ENGINEER
BRUCE BROWN
20995
OKLAHOMA
06-01-2022

BROWN ENGINEERS
501-448-0100

SHEET

EJ1

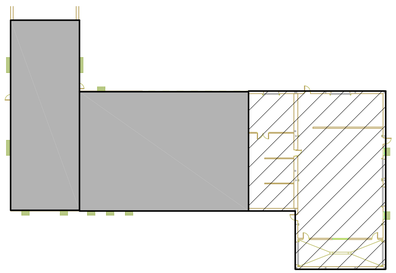

1 SLUDGE HANDLING LIGHTING PLAN
SCALE: 1/4" = 1'–0"

P:\PRODUCTION\PROJECTS\WALL ENGINEERING (WE)\WE–055 SHAWNEE NORTHSIDE WASTEWATER TREATMENT PLANT\DWG\EJ2.DWG
6/3/2022 7:25 AM

WALL ENGINEERING
PO BOX 1457, DURANT, OK 74702
OKLAHOMA CA #5413 EXP. JUNE 30, 2023

SUBMITTAL / REVISIONS:

DATE	BY	SUBMITTAL / REVISION
.	.	.
.	.	.
.	.	.
.	.	.
.	.	.
.	.	.
.	.	.

SHAWNEE MUNICIPAL AUTHORITY
WASTEWATER SYSTEM IMPROVEMENTS
SHAWNEE, OKLAHOMA

ELECTRICAL
SLUDGE HANDLING LIGHTING PLAN

PROJECT NO.	SHN–20–01
DATE	06/22
DRAWN BY:	CD
CHECKED BY:	BB
REVIEWED BY:	BB
SCALE:	AS SHOWN

BAR IS ONE INCH ON ORIGINAL DRAWING
0' 1'
IF NOT ONE INCH ON THIS SHEET, ADJUST SCALES ACCORDINGLY

SHEET
EJ2

REGISTERED PROFESSIONAL ENGINEER
BRUCE W. BROWN
20995
OKLAHOMA
04-01-2022

BROWN ENGINEERS
501-448-0100

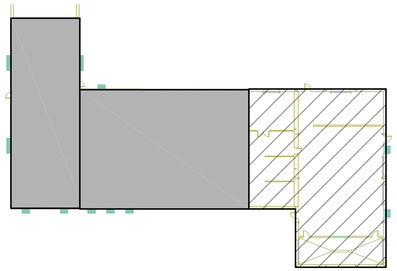

KEYNOTES

P300 FURNISH AND INSTALL 4'X4' PLYWOOD TELEPHONE BACKBOARD. REFERENCE TELPHONE AND DATA RISER DIAGRAM.

P301 FURNISH AND INSTALL A TWO POST DATA RACK BOLTED TO THE CONCRETE FLOOR AND PATCH PANELS AND MAKE ALL FIBER AND COPPER TERMINATIONS. POST RACK SHALL BE 19"W X 30"D X 7'H. COORDINATE WITH OWNER'S IT PERSONNEL FOR FINAL LOCATION. ROUTE ALL DATA CABLING IN AREA TO THIS LOCATION.

1 SLUDGE HANDLING FACILITY PLAN
SCALE: 1/4" = 1'-0"

WALL ENGINEERING
PO BOX 1457, DURANT, OK 74702
OKLAHOMA CA #5413 EXP. JUNE 30, 2023

SUBMITTAL / REVISIONS:

DATE	BY	SUBMITTAL / REVISION

SHAWNEE MUNICIPAL AUTHORITY
WASTEWATER SYSTEM IMPROVEMENTS
SHAWNEE, OKLAHOMA

ELECTRICAL
SLUDGE HANDLING FACILITY PLAN

PROJECT NO.
SHN–20–01
DATE
06/22
DRAWN BY:
CD
CHECKED BY:
BB
REVIEWED BY:
BB
SCALE:
AS SHOWN

BAR IS ONE INCH ON ORIGINAL DRAWING
0' 1'
IF NOT ONE INCH ON THIS SHEET, ADJUST SCALES ACCORDINGLY

SHEET
EJ3

BROWN ENGINEERS 501-448-0100

P:\PRODUCTION\PROJECTS\WALL ENGINEERING (WE)\WE–055 SHAWNEE NORTHSIDE WASTEWATER TREATMENT PLANT\DWG\EJ3.DWG
6/3/2022 7:16 AM

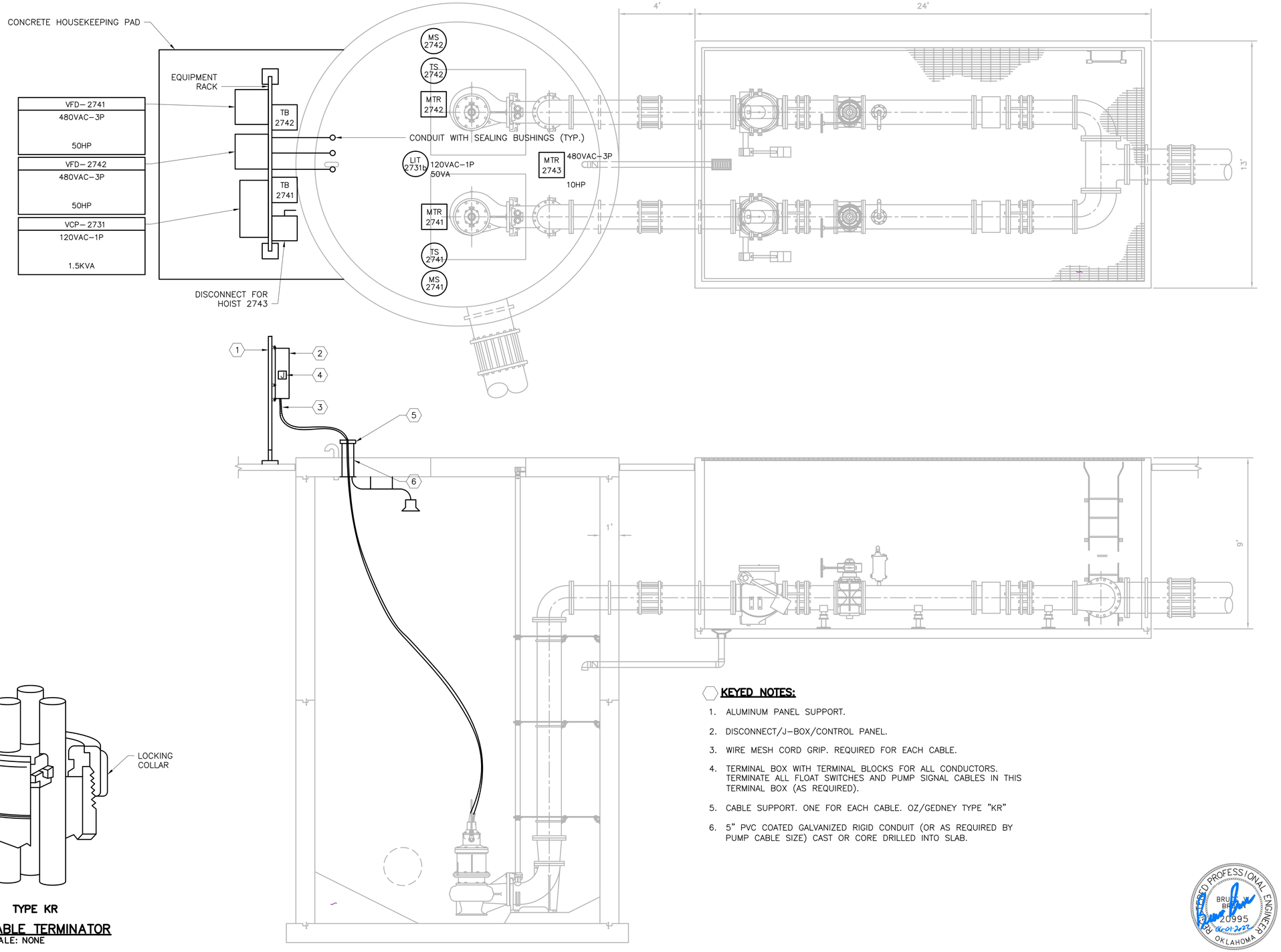

TYPE KR

3 CABLE TERMINATOR
SCALE: NONE

KEYED NOTES:

1. ALUMINUM PANEL SUPPORT.
2. DISCONNECT/J–BOX/CONTROL PANEL.
3. WIRE MESH CORD GRIP. REQUIRED FOR EACH CABLE.
4. TERMINAL BOX WITH TERMINAL BLOCKS FOR ALL CONDUCTORS. TERMINATE ALL FLOAT SWITCHES AND PUMP SIGNAL CABLES IN THIS TERMINAL BOX (AS REQUIRED).
5. CABLE SUPPORT. ONE FOR EACH CABLE. OZ/GEDNEY TYPE "KR"
6. 5" PVC COATED GALVANIZED RIGID CONDUIT (OR AS REQUIRED BY PUMP CABLE SIZE) CAST OR CORE DRILLED INTO SLAB.

WALL ENGINEERING
PO BOX 1457, DURANT, OK 74702
OKLAHOMA CA #5413 EXP. JUNE 30, 2023

SUBMITTAL / REVISIONS:

DATE	BY	SUBMITTAL / REVISION
.	.	.

SHAWNEE MUNICIPAL AUTHORITY
WASTEWATER SYSTEM IMPROVEMENTS
SHAWNEE, OKLAHOMA

ELECTRICAL
FEB RETURN LIFT STATION
I & C PLAN

PROJECT NO.	SHN–20–01
DATE	06/22
DRAWN BY:	CD
CHECKED BY:	BB
REVIEWED BY:	BB
SCALE:	AS SHOWN

BAR IS ONE INCH ON ORIGINAL DRAWING
0' 1'
IF NOT ONE INCH ON THIS SHEET, ADJUST SCALES ACCORDINGLY

SHEET

EK1

BROWN ENGINEERS
501-448-0100

P:\PRODUCTION\PROJECTS\WALL ENGINEERING (WE)\WE–055 SHAWNEE NORTHSIDE WASTEWATER TREATMENT PLANT\DWG\EK1.DWG
5/20/2022 10:17 AM

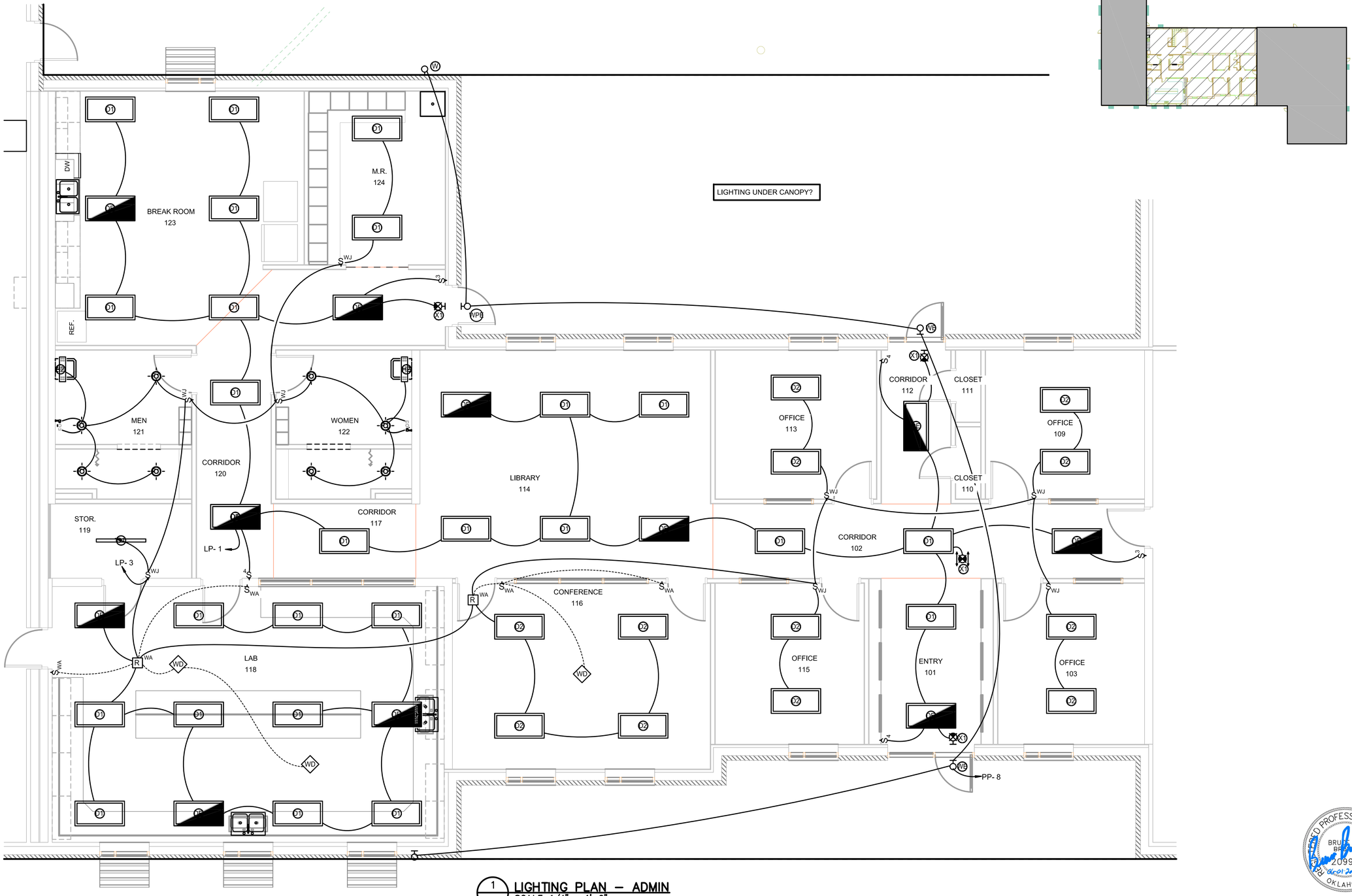

1 LIGHTING PLAN – ADMIN
SCALE: 1/4" = 1'–0"

P:\PRODUCTION\PROJECTS\WALL ENGINEERING (WE)\WE–055 SHAWNEE NORTHSIDE WASTEWATER TREATMENT PLANT\DWG\EL1.DWG
5/20/2022 10:22 AM

WALL ENGINEERING
PO BOX 1457, DURANT, OK 74702
OKLAHOMA CA #5413 EXP. JUNE 30, 2023

SUBMITTAL / REVISIONS:

DATE	BY	SUBMITTAL / REVISION
.	.	.
.	.	.
.	.	.
.	.	.
.	.	.
.	.	.
.	.	.

SHAWNEE MUNICIPAL AUTHORITY
WASTEWATER SYSTEM IMPROVEMENTS
SHAWNEE, OKLAHOMA

ELECTRICAL
LIGHTING PLAN – ADMIN

PROJECT NO.	SHN–20–01
DATE	06/22
DRAWN BY:	CD
CHECKED BY:	BB
REVIEWED BY:	BB
SCALE:	AS SHOWN

BAR IS ONE INCH ON ORIGINAL DRAWING
0' 1'
IF NOT ONE INCH ON THIS SHEET, ADJUST SCALES ACCORDINGLY

SHEET
EL1

REGISTERED PROFESSIONAL ENGINEER
BRUCE BROWN
20995
OKLAHOMA
06-01-2022

BROWN ENGINEERS
501-448-0100

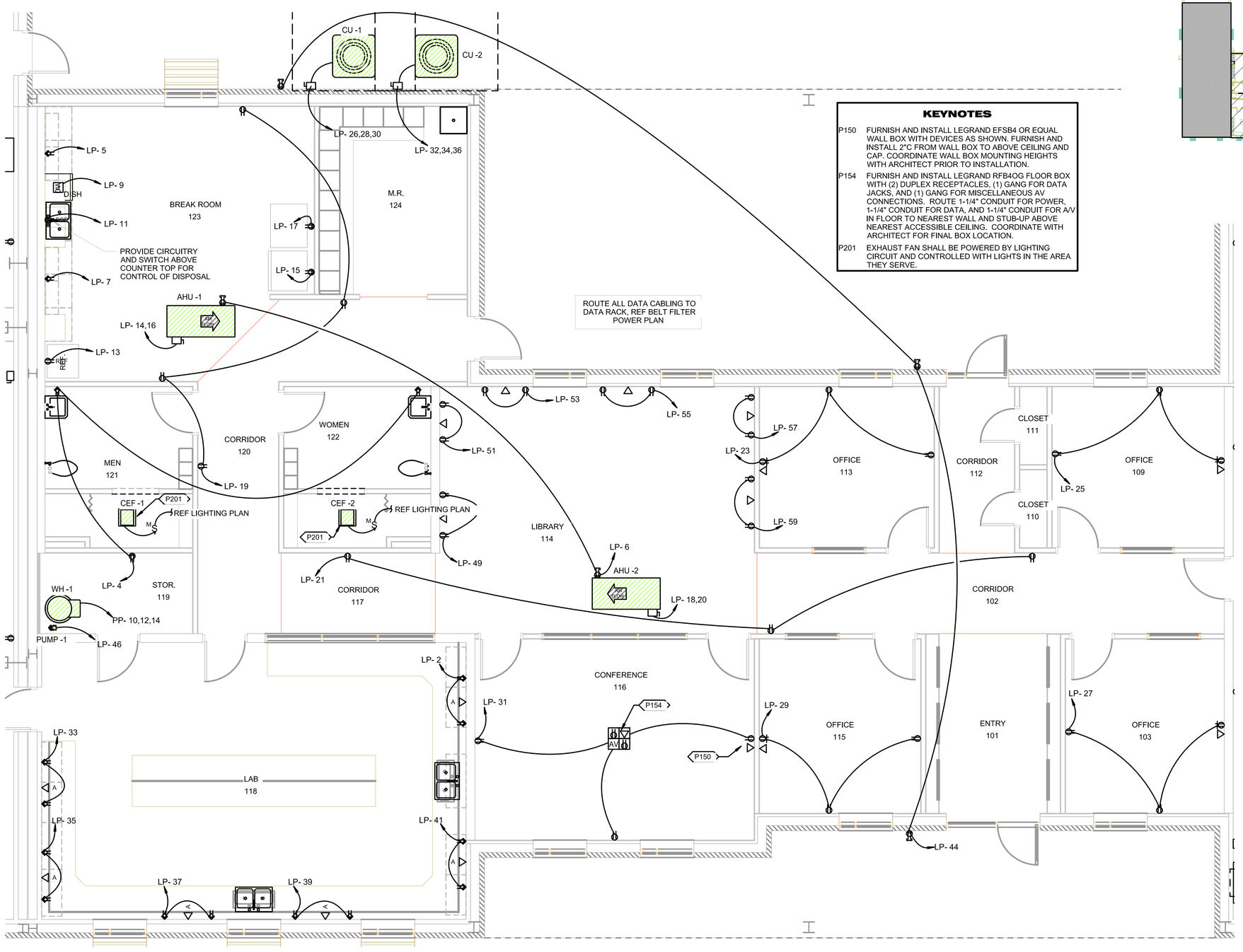

KEYNOTES

P150	FURNISH AND INSTALL LEGRAND EFSB4 OR EQUAL WALL BOX WITH DEVICES AS SHOWN. FURNISH AND INSTALL 2"C FROM WALL BOX TO ABOVE CEILING AND CAP. COORDINATE WALL BOX MOUNTING HEIGHTS WITH ARCHITECT PRIOR TO INSTALLATION.
P154	FURNISH AND INSTALL LEGRAND RFB4OG FLOOR BOX WITH (2) DUPLEX RECEPTACLES, (1) GANG FOR DATA JACKS, AND (1) GANG FOR MISCELLANEOUS AV CONNECTIONS. ROUTE 1-1/4" CONDUIT FOR POWER, 1-1/4" CONDUIT FOR DATA, AND 1-1/4" CONDUIT FOR A/V IN FLOOR TO NEAREST WALL AND STUB-UP ABOVE NEAREST ACCESSIBLE CEILING. COORDINATE WITH ARCHITECT FOR FINAL BOX LOCATION.
P201	EXHAUST FAN SHALL BE POWERED BY LIGHTING CIRCUIT AND CONTROLLED WITH LIGHTS IN THE AREA THEY SERVE.

1 POWER PLAN – ADMIN
SCALE: 1/4" = 1'–0"

WALL ENGINEERING
PO BOX 1457, DURANT, OK 74702
OKLAHOMA CA #5413 EXP. JUNE 30, 2023

SUBMITTAL / REVISIONS:

DATE	BY	SUBMITTAL / REVISION
. . . . .	. . .	. . . . .

SHAWNEE MUNICIPAL AUTHORITY
WASTEWATER SYSTEM IMPROVEMENTS
SHAWNEE, OKLAHOMA

ELECTRICAL
POWER PLAN – ADMIN

PROJECT NO.	SHN–20–01
DATE	06/22
DRAWN BY:	CD
CHECKED BY:	BB
REVIEWED BY:	BB
SCALE:	AS SHOWN

BAR IS ONE INCH ON ORIGINAL DRAWING
0" 1"
IF NOT ONE INCH ON THIS SHEET, ADJUST SCALES ACCORDINGLY

SHEET
EL2

REGISTERED PROFESSIONAL ENGINEER
BRUCE BROWN
20995
OKLAHOMA
06-01-2023

BROWN ENGINEERS
501-448-0100

P:\PRODUCTION\PROJECTS\WALL ENGINEERING (WE)\WE-055 SHAWNEE NORTHSIDE WASTEWATER TREATMENT PLANT\DWG\EL2.DWG
5/20/2022 1:05 PM

BILL OF MATERIAL			
(#)	QUANTITY	DESCRIPTION	PART #
1	A/R	DIN RAIL	IBOCO OMEGA 3F
2	4	END CLAMP	PHOENIX 0800886
3	108	TERMINAL BLOCK (QNT MAY VARY WITH CONFIG)	PHOENIX 3044076
4	1	CROUSE-HINDS ENCLOSURE 24"x24"x8" (OR EQUAL)	CROUSE-HINDS EJB242408
5	A/R	2" WIREWAY	PANDUIT H2X3LG6
6	A/R	2" WIREWAY COVER	PANDUIT HC2LG6
7	1	CROUSE-HINDS MOUNTING PLATE 24"x24"	CROUSE-HINDS EJB MP2424

* ENCLOSURE SIZE IS APPROXIMATE. CONTRACTOR SHALL MAKE FINAL DIMENSION SELECTION BASED ON ACTUAL REQUIREMENTS OF FINAL PANEL LAYOUT. SUBMIT LAYOUTS FOR EACH TERMINAL BOX FOR APPROVAL PRIOR TO WORK.

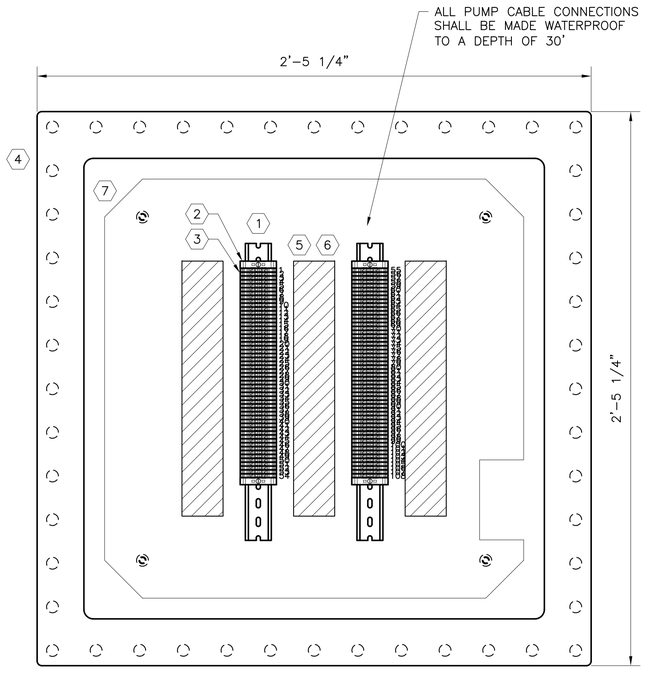

1 CLASS 1, DIV 1 TERMINAL BOX LAYOUT (TYP. OF TB-4041, 4042, 4043, 4044)
SCALE: NONE

BILL OF MATERIAL			
	QUANTITY	DESCRIPTION	PART #
1	AS REQUIRED	DIN RAIL	IBOCO OMEGA 3F
2	AS REQUIRED	END CLAMP	PHOENIX 0800886
3	AS REQUIRED	TERMINAL BLOCK	PHOENIX 3044076
4	1	HOFFMAN ENCLOSURE 36"x36"x12"	HOFFMAN A36H3612SSLP *
5	AS REQUIRED	2" WIREWAY	PANDUIT H2X3LG6
6	AS REQUIRED	2" WIREWAY COVER	PANDUIT HC2LG6
7	1	MOUNTING PLATE	HOFFMAN
8	1	COPPER/FIBER ETHERNET SWITCH	HIRSCHMANN BOBCAT BRS40-8TX/4SFP 8X 1000BASETX (RJ45), 4X SFP (WITH FIBER CONVERTER)
9	1	12 STRAND FIBER PATCH PANEL	SNAP DIN RAIL MOUNT SNAP-12XX

* ENCLOSURE SIZE IS APPROXIMATE. CONTRACTOR SHALL MAKE FINAL DIMENSION SELECTION BASED ON ACTUAL REQUIREMENTS OF FINAL PANEL LAYOUT. SUBMIT LAYOUTS FOR EACH TERMINAL BOX FOR APPROVAL PRIOR TO WORK.

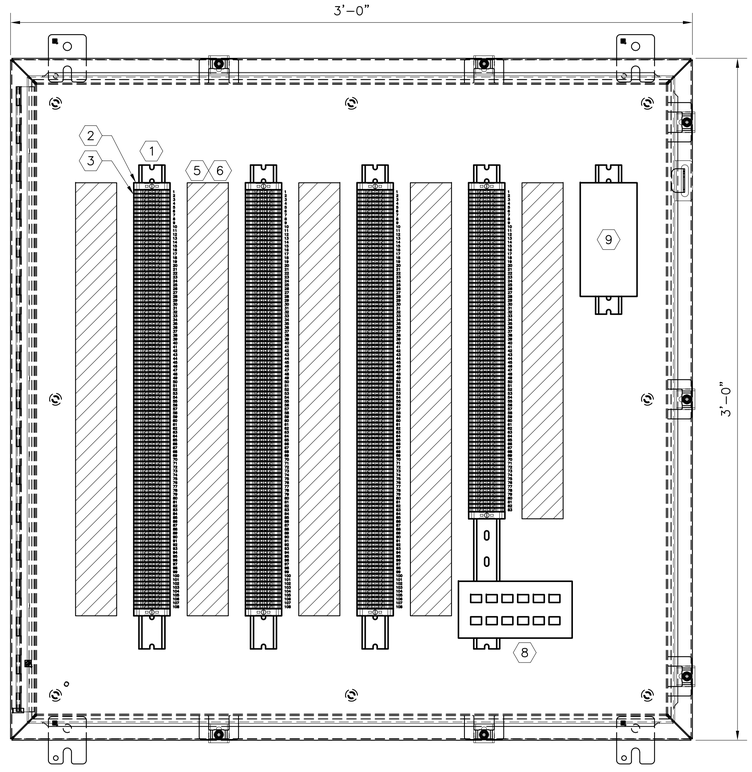

2 TERMINAL BOX LAYOUT (TYP. OF TB-BLOW(A), TB-BLOW(D), TB-BLOW(D), TB-DIG(A), TB-DIG(B), TB-1031(SBRA), TB-1031(SBRD))
SCALE: NONE

WALL ENGINEERING
PO BOX 1457, DURANT, OK 74702
OKLAHOMA CA #5413 EXP. JUNE 30, 2023

SUBMITTAL / REVISIONS:

DATE	BY	SUBMITTAL / REVISION

SHAWNEE MUNICIPAL AUTHORITY
WASTEWATER SYSTEM IMPROVEMENTS
SHAWNEE, OKLAHOMA

ELECTRICAL DETAILS

PROJECT NO.
SHN-20-01
DATE
06/22
DRAWN BY:
CD
CHECKED BY:
BB
REVIEWED BY:
BB
SCALE:
AS SHOWN

BAR IS ONE INCH ON ORIGINAL DRAWING
0" 1"
IF NOT ONE INCH ON THIS SHEET, ADJUST SCALES ACCORDINGLY

SHEET
EN1

REGISTERED PROFESSIONAL ENGINEER
BRUCE BROWN
20995
06-01-2022
OKLAHOMA
BROWN ENGINEERS
501-448-0100

P:\PRODUCTION\PROJECTS\WALL ENGINEERING (WE)\WE-055 SHAWNEE NORTHSIDE WASTEWATER TREATMENT PLANT\DWG\EN1.DWG
6/1/2022 4:01 PM

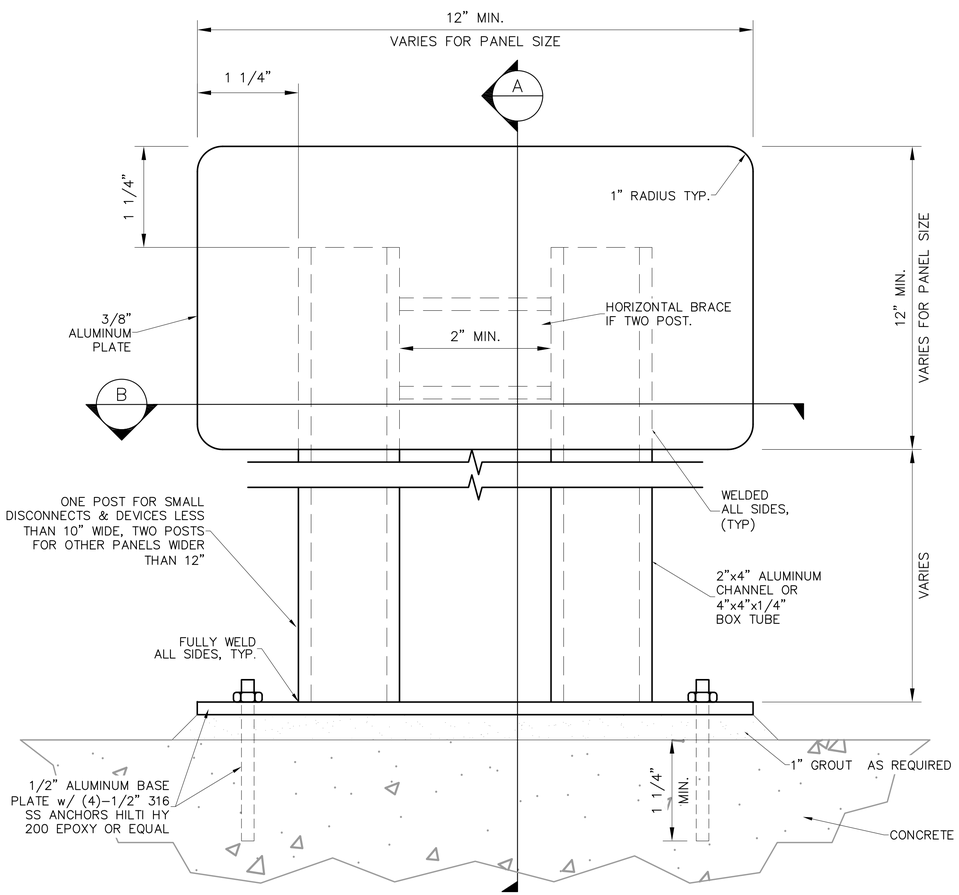

CUSTOM ALUMINUM PANEL SUPPORT
SCALE: NONE

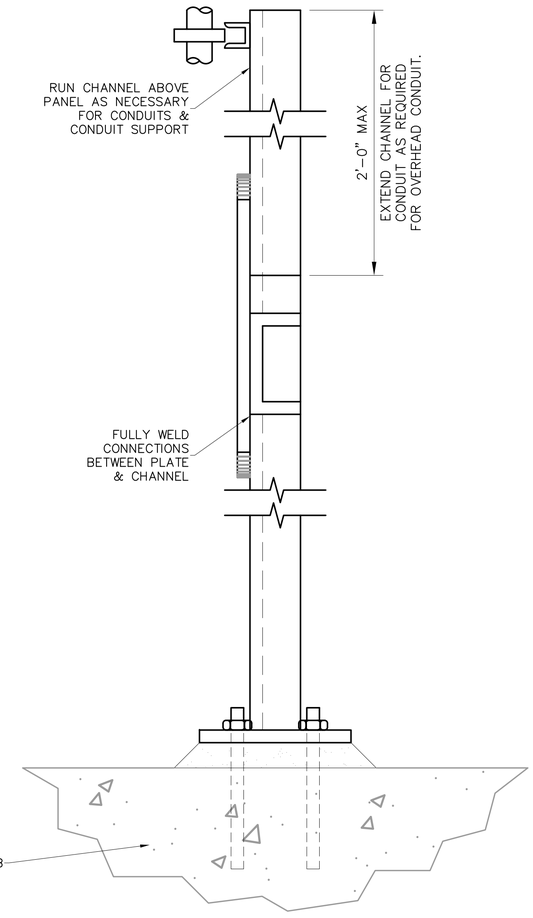

A PANEL SUPPORT SECTION
SCALE: NONE

DETAIL NOTE:
SUBMIT DRAWING FOR APPLICATION FOR APPROVAL. PANEL(S) NOT SHOWN FOR CLARITY

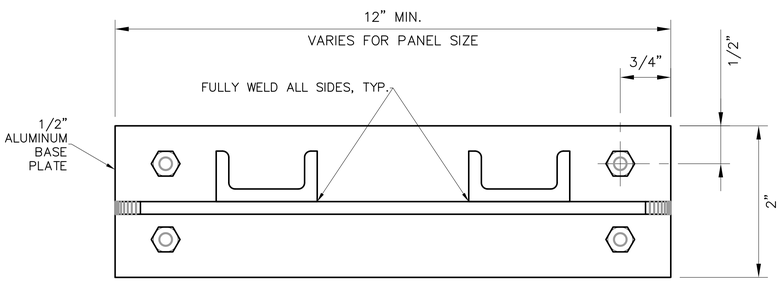

B PANEL SUPPORT BASE PLATE DETAIL
SCALE: NONE

P:\PRODUCTION\PROJECTS\WALL ENGINEERING (WE)\WE-055 SHAWNEE NORTHSIDE WASTEWATER TREATMENT PLANT\DWG\EN2.DWG
5/20/2022 1:07 PM

WALL ENGINEERING
PO BOX 1457, DURANT, OK 74702
OKLAHOMA CA #5413 EXP. JUNE 30, 2023

SUBMITTAL / REVISIONS:

DATE	BY	SUBMITTAL / REVISION
.	.	.
.	.	.
.	.	.
.	.	.
.	.	.
.	.	.
.	.	.

SHAWNEE MUNICIPAL AUTHORITY
WASTEWATER SYSTEM IMPROVEMENTS
SHAWNEE, OKLAHOMA

ELECTRICAL DETAILS

PROJECT NO.
SHN-20-01
DATE
06/22
DRAWN BY:
CD
CHECKED BY:
BB
REVIEWED BY:
BB
SCALE:
AS SHOWN

BAR IS ONE INCH ON ORIGINAL DRAWING
0" 1"
IF NOT ONE INCH ON THIS SHEET, ADJUST SCALES ACCORDINGLY

REGISTERED PROFESSIONAL ENGINEER
BRUCE BROWN
20995
06-01-2022
OKLAHOMA

BROWN ENGINEERS
501-448-0100

SHEET
EN2

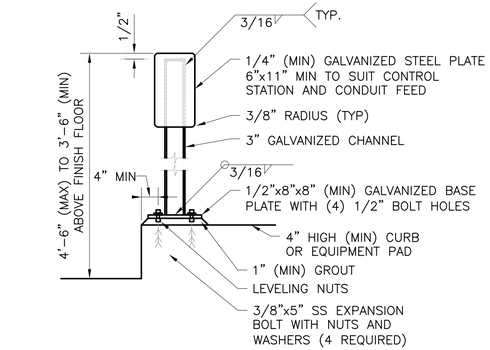

1 — **TYPICAL CONTROL STATION MOUNTING DETAIL**
SCALE: NONE

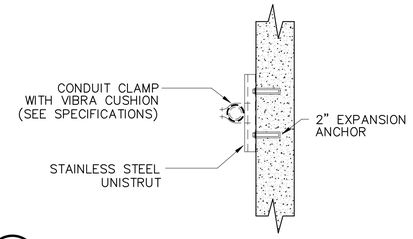

2 — **CONDUIT SUPPORT DETAIL (SINGLE CONDUIT SHOWN, MULTIPLE CONDUIT SIMILAR)**
SCALE: NONE

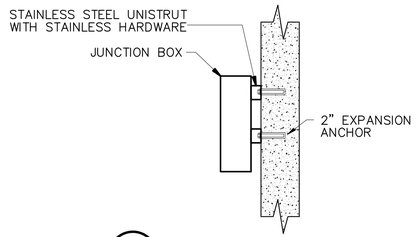

3 — **JUNCTION BOX SUPPORT DETAIL**
SCALE: NTS

NOTES:

1. LENGTH VARIES WITH NUMBER OF PIPES TO BE SUPPORTED AND SPACING BETWEEN PIPES
2. HANGER RODS SHALL BE SIZED FOR LOADS AND SPACING
3. ALLOWABLE SPAN, NUMBER AND SIZE OF SUPPORT RODS AND ALLOWABLE LOADING PER MANUFACTURERS RECOMMENDATIONS
4. FOR HANGER ROD SUPPORT IN CONCRETE APPLICATIONS, USE SWIVEL CONCRETE INSERTS. FOR STEEL BEAM APPLICATIONS, USE SWIVEL BEAM CLAMPS
5. USE STAINLESS STEEL STRUT AND HARDWARE

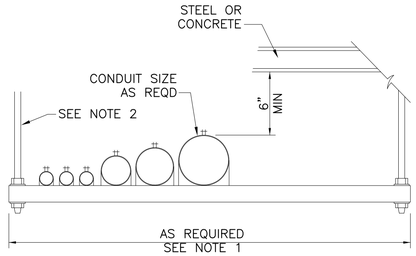

4 — **PIPE AND CONDUIT RACKING SYSTEM**
SCALE: NTS

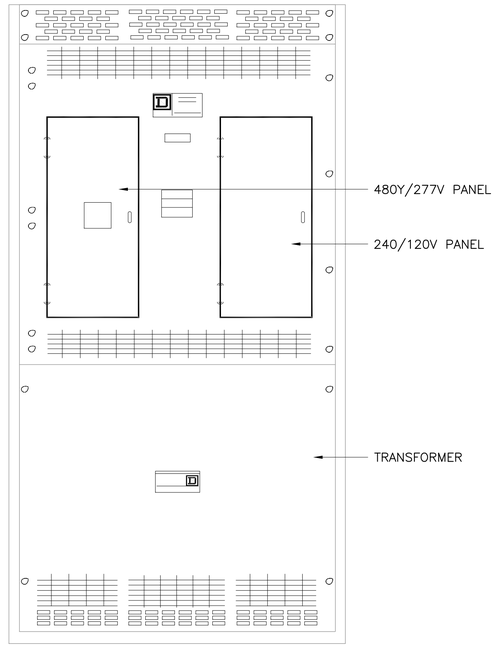

5 — **INTEGRATED POWER CENTER (IPC)**
SCALE: NONE

WALL ENGINEERING
PO BOX 1457, DURANT, OK 74702
OKLAHOMA CA #5413 EXP. JUNE 30, 2023

SUBMITTAL / REVISIONS:

DATE	BY	SUBMITTAL / REVISION
.	.	.

SHAWNEE MUNICIPAL AUTHORITY
WASTEWATER SYSTEM IMPROVEMENTS
SHAWNEE, OKLAHOMA

ELECTRICAL DETAILS

PROJECT NO.
SHN–20–01
DATE
06/22
DRAWN BY:
CD
CHECKED BY:
BB
REVIEWED BY:
BB
SCALE:
AS SHOWN

BAR IS ONE INCH ON ORIGINAL DRAWING
0" 1"
IF NOT ONE INCH ON THIS SHEET, ADJUST SCALES ACCORDINGLY

SHEET
EN3

BROWN ENGINEERS
501-448-0100

P:\PRODUCTION\PROJECTS\WALL ENGINEERING (WE)\WE-055 SHAWNEE NORTHSIDE WASTEWATER TREATMENT PLANT\DWG\EN3.DWG
5/20/2022 1:07 PM

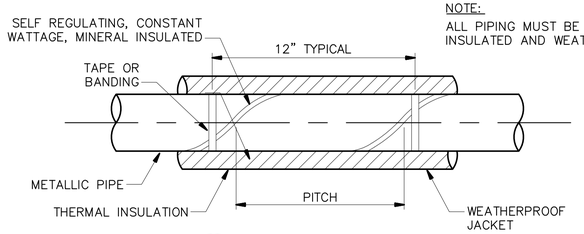

NOTE:
ALL PIPING MUST BE FULLY INSULATED AND WEATHERSEALED

1 — HEAT TRACE DETAIL I
SCALE: NONE

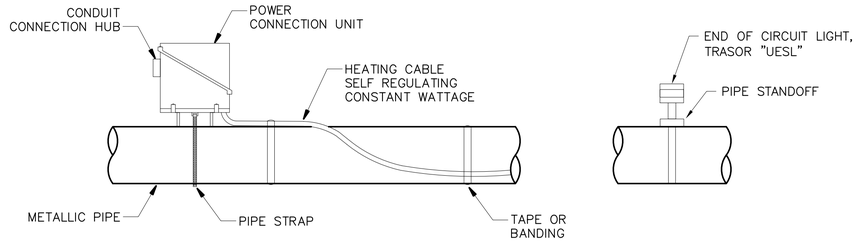

2 — HEAT TRACE DETAIL II
SCALE: NONE



GENERAL NOTES:

1. POWER MARKING TAPES SHALL BE DETECTABLE TYPE CONSTRUCTION WITH RED BACKGROUND AND BLACK LETTERING.
2. COMMUNICATION MARKING TAPES SHALL BE DETECTABLE TYPE CONSTRUCTION WITH ORANGE BACKGROUND AND BLACK LETTERING, "TELEPHONE LINE" OR "FIBER OPTIC LINE" RESPECTIVELY.
3. TAPE SHALL BE DETECTABLE, DURABLE, HIGHLY VISIBLE, RESISTANT TO ELEMENTS, MEETING AND/OR EXCEEDING ALL INDUSTRY STANDARDS.

3 — UNDERGROUND DETECTABLE WARNING TAPE
SCALE: NONE

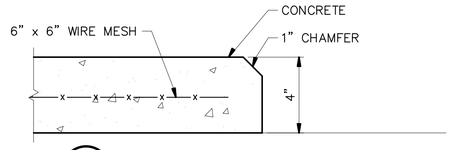

4 — HOUSEKEEPING PAD (TYPICAL)
SCALE: NTS

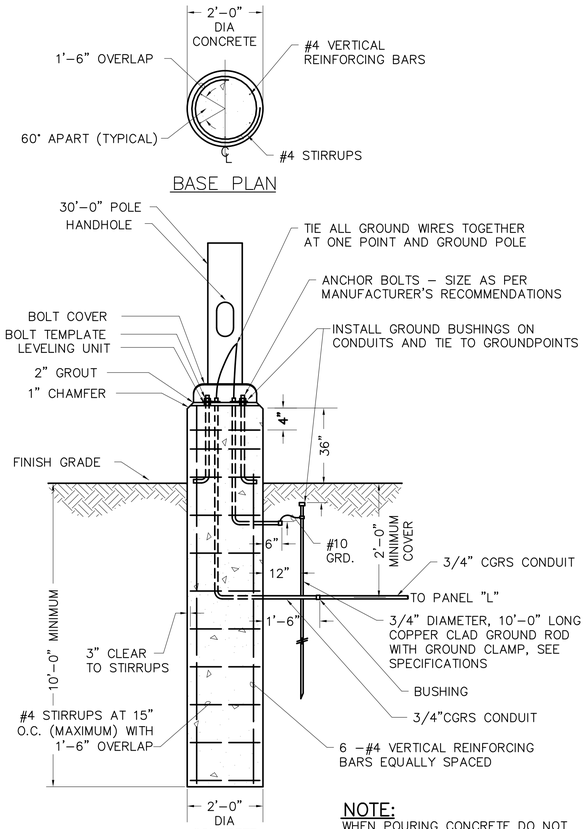

NOTE:
WHEN POURING CONCRETE DO NOT DROP CONCRETE THROUGH WATER IF WATER IS PRESENT IN HOLE.

7 — POLE BASE DETAIL
SCALE: NONE

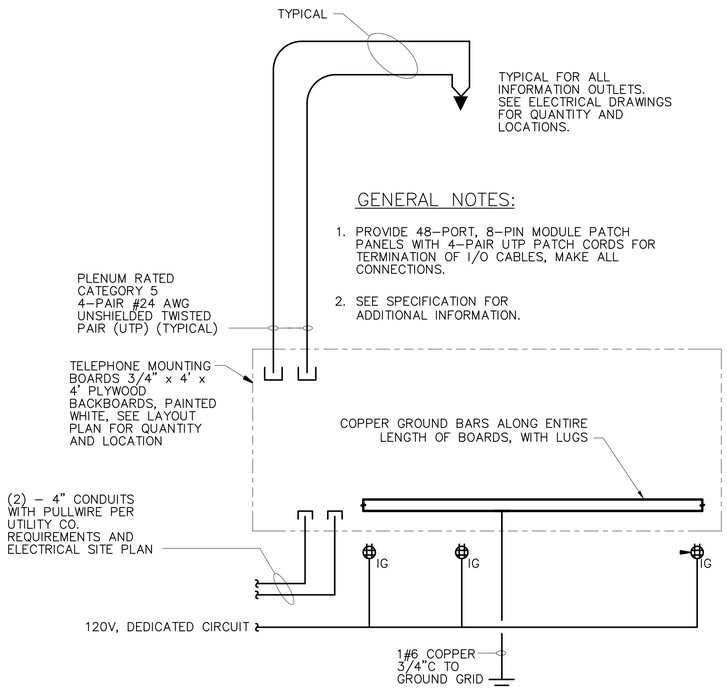

GENERAL NOTES:

1. PROVIDE 48–PORT, 8–PIN MODULE PATCH PANELS WITH 4–PAIR UTP PATCH CORDS FOR TERMINATION OF I/O CABLES, MAKE ALL CONNECTIONS.
2. SEE SPECIFICATION FOR ADDITIONAL INFORMATION.

5 — TELEPHONE AND DATA RISER DIAGRAM
SCALE: NONE

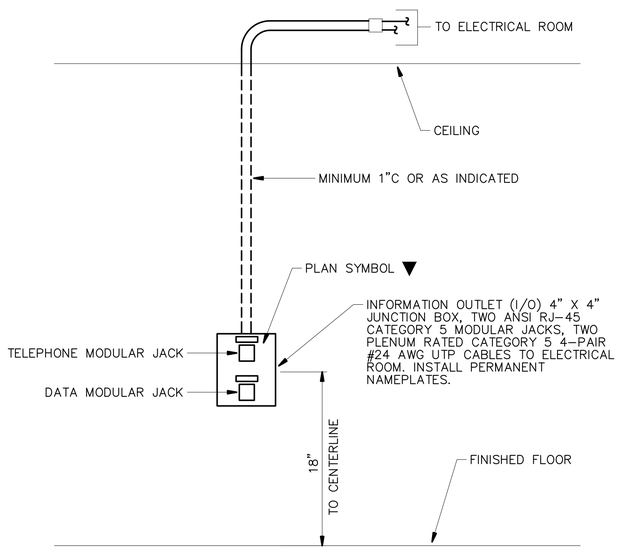

NOTE:

1. FLUSH MOUNTED INFORMATION OUTLET: 1 BOX, 2 JACKS, 2 CABLES, 1 CONDUIT. ONE FLEXIBLE CONDUIT PER INFORMATION OUTLET. ROUTE UP THROUGH WALL AND STUB ABOVE CEILING. CAP, TAG, AND IDENTIFY ALL CONDUIT. PROVIDE PULLWIRE IN ALL CONDUIT. PULLWIRE TO REMAIN AFTER CABLE INSTALLATION. TWO JACKS AND CABLES UNLESS OTHERWISE NOTED.
2. WHERE UNABLE TO CONCEAL ABOVE CEILING–PROVIDE WIREMOLD TO CONCEAL CIRCUIT

6 — TYPICAL INFORMATION OUTLET
SCALE: NONE

WALL ENGINEERING
PO BOX 1457, DURANT, OK 74702
OKLAHOMA CA #5413 EXP. JUNE 30, 2023

SUBMITTAL / REVISIONS:
BY | SUBMITTAL / REVISION
DATE

SHAWNEE MUNICIPAL AUTHORITY
WASTEWATER SYSTEM IMPROVEMENTS
SHAWNEE, OKLAHOMA

ELECTRICAL DETAILS

PROJECT NO.
SHN–20–01
DATE
06/22
DRAWN BY:
CD
CHECKED BY:
BB
REVIEWED BY:
BB
SCALE:
AS SHOWN

BAR IS ONE INCH ON ORIGINAL DRAWING
0" 1"
IF NOT ONE INCH ON THIS SHEET, ADJUST SCALES ACCORDINGLY

SHEET
EN4

BROWN ENGINEERS
501-448-0100

P:\PRODUCTION\PROJECTS\WALL ENGINEERING (WE)\WE–055 SHAWNEE NORTHSIDE WASTEWATER TREATMENT PLANT\DWG\EN4.DWG
5/20/2022 1:08 PM

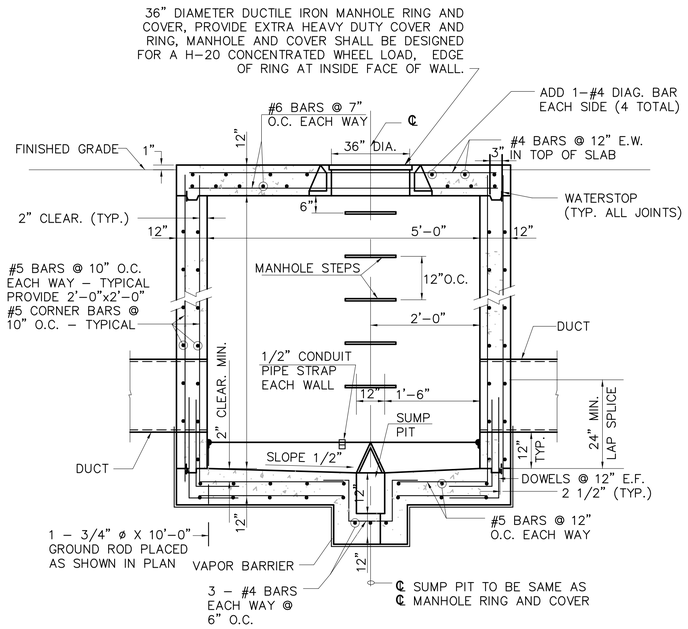

1 — **PREFABRICATED CONCRETE PULL BOX - PLAN SYMBOL H**
SCALE: NONE

MANHOLE NOTES:

1. SUBMIT LAYOUT OF EACH MANHOLE FOR APPROVAL BY ENGINEER, INDICATING DUCT, CONDUIT AND SPARE STUBOUTS. MANHOLE INTERIOR DIMENSION SIZE SHALL BE AS DETAILED.
2. EXACT LOCATION FOR EACH MANHOLE SHALL BE
3. APPROVED BY THE ENGINEER/OWNER.
4. CABLE BRACKETS SHALL BE A BRACED CHANNEL STRUT WITH INSULATED CABLE CLAMPS.
5. INSTALL CABLE BRACKETS AND PULLING IRONS IN EACH FACE.
6. PROVIDE WATER STOPS AT ALL JOINTS; SPLICE WHERE REQUIRED.
7. PROVIDE 0.006" PLASTIC MEMBRANE VAPOR BARRIER AT BOTTOM; PROVIDE 2 COATS WATERPROOF COATING COLD METHOD. ALLOW TO DRY 24 HOURS BETWEEN EACH COAT AND BACKFILLING.
8. COLOR CODE, TAG, AND IDENTIFY ALL CABLES IN MANHOLE.
9. PROVIDE MINIMUM 5' SLACK CABLE LOOP FOR EACH CABLE.
10. PROVIDE 3' MINIMUM CONDUIT PER CAPPED STUBOUT. PROVIDE CONDUIT BUSHINGS AND WATERTIGHT SEALS FOR
11. ALL DIRECET BURIED CABLES AND COUNTERPOISE ENTERING THE MANHOLE VIA A CONDUIT STUBOUT. PROVIDE SLEEVES FOR 8 WAY EXITS AT MANHOLES.
12. SLEEVES AND STUBOUTS SHALL BE CAPPED WATERTIGHT. BOND AND GROUND COVER AND FRAME TO GROUND ROD
13. USING BRAIDED COPPER GROUND STRAP EQUIVALENT TO #6 AWG COPPER WIRE.

TRANSFORMER PAD KEYED NOTES:

1. INSTALL NEW COPPER CLAD GROUND ROD, 3/4" x 10"-0", TYPICAL OF 4.
2. INSTALL NEW #2/0 BARE COPPER CONDUCTOR (TYPICAL).
3. INSTALL NEW #2 BARE COPPER CONDUCTOR.
4. INSTALL NEW EXOTHERMIC WELD, TYPICAL OF 5.
5. INSTALL NEW SECONDARY CONDUITS, SEE SITE PLAN.
6. INSTALL NEW PRIMARY CONDUITS, SEE SITE PLAN.
7. INSTALL NEW #4 REBAR, 12"O.C. BOTH WAYS.
8. CONSTRUCT NEW PAD USING CONCRETE, 3500 PSI AT 28 DAYS.
9. INSTALL NEW 1" GRSC UNDER PAD FOR GROUND WIRES (TYPICAL).
10. UTILIZE LONG SWEEP 90° BEND PVC CONDUITS ON PRIMARY CONDUITS.
11. UTILIZE LONG SWEEP 90° BEND CONDUITS ON SECONDARY CONDUITS.

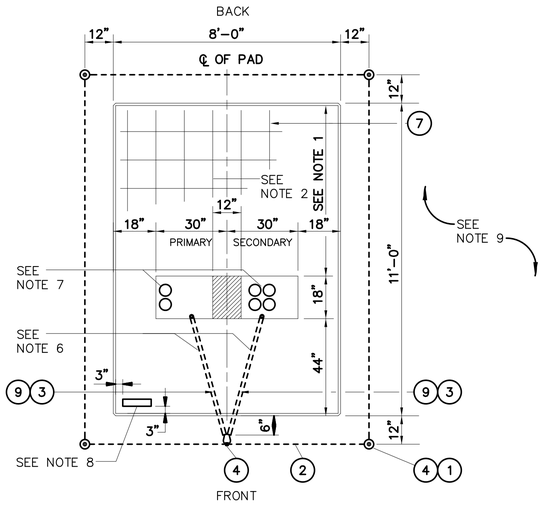

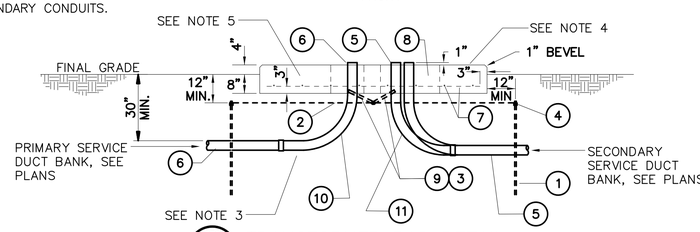

2 — **TRANSFORMER PAD DETAIL**
SCALE: NONE

TRANSFORMER PAD NOTES:

1. WHERE POSSIBLE. DO NOT PLACE CONDUIT UNDER THIS SECTION OF FOUNDATION.
2. REINFORCING - #4 BARS 12" O.C. BOTH WAYS.
3. WHEN INSTALLING CONDUIT, DISTURB GROUND IN FOUNDATION AREA AS LITTLE AS POSSIBLE. EXTEND CONDUIT 1" ABOVE FOUNDATION.
4. TOP OF FOUNDATION TO BE SMOOTH AND LEVEL. FINAL GRADE SHALL SLOPE AWAY FROM PAD.
5. CONCRETE SHALL BE 3500 PSI AT 28 DAYS AND 1:2:4 MIXTURE WITH 6 GAL. MAX. WATER CONTENT PER SACK OF CEMENT.
6. CONTRACTOR TO FURNISH 1" CONDUIT UNDER PAD FOR GROUND WIRE.
7. LOCATE CONDUITS UNDER PRIMARY AND SECONDARY BUSHINGS.
8. TRANSFORMER LOCATION TAG SHALL BE ATTACHED TO PAD WITH CONCRETE NAILS OR SHEET METAL SCREWS.
9. TRANSFORMER PAD REQUIRES A MINIMUM 3'-0" CLEARANCE AROUND EACH SIDE AND BACK OF PAD. A 15'-0" CLEARANCE IS REQUIRED ON FRONT SIDE OF PAD.

ELECTRICAL DUCT NOTES:

1. CONTRACTOR SHALL STAKE THE DUCT INSTALLATION IN PLAN AND ELEVATION FOR NEW ELECTRICAL DUCTS TO AVOID EXISTING UTILITIES.
2. CONTRACTOR SHALL ADJUST THE DEPTH OF THE ELECTRICAL DUCTS AS REQUIRED TO MAINTAIN THE MINIMUM COVER REQUIREMENT INDICATED AND AVOID EXISTING UTILITIES.
3. SIMILAR CONSTRUCTION FOR OTHER DUCT SIZES. SEE DUCT BANK SCHEDULE FOR QUANTITY AND SIZES.
4. INSTALL DUCT CONDUIT SUPPORTS AT 5'-0" O.C. MAXIMUM SPACING (TYPICAL ALL DUCTS).
5. OFFSETS AND BENDS OVER 10 DEGREES AND ELBOWS IN PVC CONDUIT RUNS SHALL BE PVC COATED GALVANIZED RIGID STEEL CONDUIT.
6. NO PVC SHALL EMERGE FROM THE GROUND OR CONCRETE SLAB OR ENCASEMENT, PVC SHALL CONVERT TO PVC COATED GALVANIZED RIGID STEEL CONDUIT PRIOR TO ITS EMERGENCE.
7. INSTALL GROUND RODS AT ENDS OF ELECTRICAL DUCT OR CONNECT TO GROUND RING.
8. INSTALL CONDUCTORS AND CABLES AS NOTED ON DRAWING. INSTALL PULLWIRE IN ALL SPARE DUCTS.
9. MINIMUM COVER REQUIREMENT FOR DUCT BANKS UNDER ROADS, DRIVEWAYS AND PARKING LOTS SHALL BE 24".
10. MINIMUM COVER REQUIREMENTS FOR ELECTRICAL SECONDARY SERVICE DUCT BANKS SHALL BE 30".
11. MINIMUM COVER REQUIREMENTS FOR ELECTRICAL PRIMARY SERVICE DUCT BANKS SHALL BE 36".

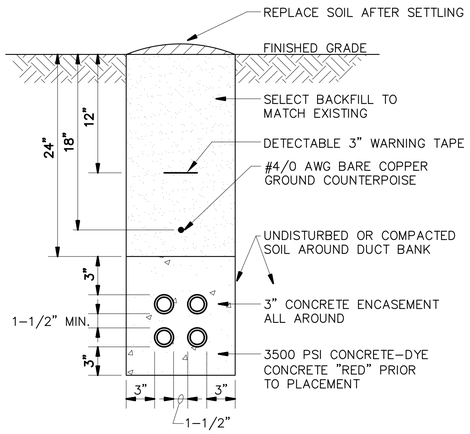

4 — **CONCRETE ENCASED ELECTRICAL DUCT**
SCALE: NONE

WALL ENGINEERING
PO BOX 1457, DURANT, OK 74702
OKLAHOMA CA #5413 EXP. JUNE 30, 2023

SUBMITTAL / REVISIONS:

DATE	BY	SUBMITTAL / REVISION
.	.	.

SHAWNEE MUNICIPAL AUTHORITY
WASTEWATER SYSTEM IMPROVEMENTS
SHAWNEE, OKLAHOMA

ELECTRICAL DETAILS

PROJECT NO.	SHN-20-01
DATE	06/22
DRAWN BY:	CD
CHECKED BY:	BB
REVIEWED BY:	BB
SCALE:	AS SHOWN

BAR IS ONE INCH ON ORIGINAL DRAWING
0' 1'
IF NOT ONE INCH ON THIS SHEET, ADJUST SCALES ACCORDINGLY

SHEET
EN5

BRUCE W. BROWN
20995
OKLAHOMA
12-01-2022
BROWN ENGINEERS
501-448-0100

P:\PRODUCTION\PROJECTS\WALL ENGINEERING (WE)\WE-055 SHAWNEE NORTHSIDE WASTEWATER TREATMENT PLANT\DWG\EN5.DWG
5/20/2022 1:08 PM

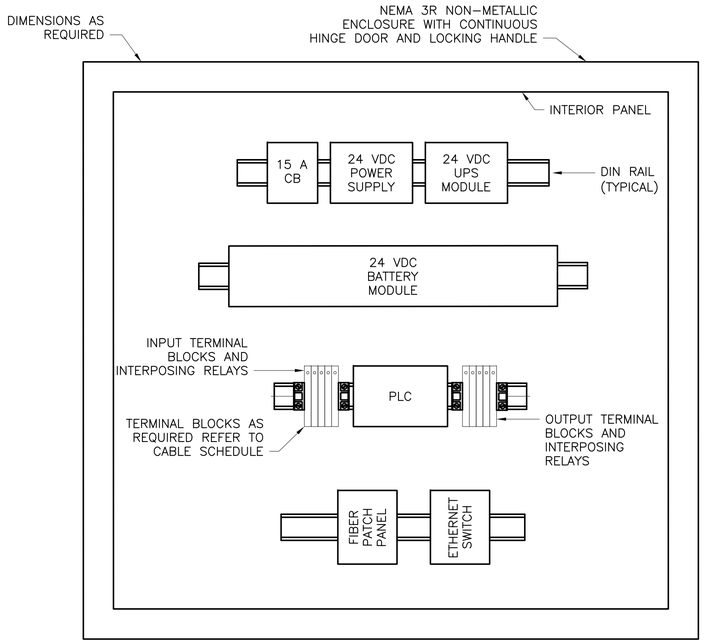

1 REMOTE TERMINAL UNIT "RTU" LAYOUT (TYP RTU-A, RTU-B, RTU-C, RTU-D, RTU-E)
SCALE: NONE

NOTE:

1. 24 VDC POWER SUPPLY SHALL BE SOLA SDN 10-24 OR APPROVED EQUAL.
2. 24 VDC UPS MODULE SHALL BE SOLA SDU 10-24 OR APPROVED EQUAL.
3. 24 VDC BATTERY MODULE SHALL BE SOLA SDU 24-BAT OR APPROVED EQUAL.
4. PLC SHALL BE ALLEN-BRADLEY COMPACT LOGIX 5370
5. COPPER/FIBER ETHERNET SWITCH HIRSCHMANN BOBCAT BRS40-4SFP 8X 1000BASETX (RJ45), 4X SFP (WITH FIBER CONVERTER)
6. 12 STRAND FIBER PATCH PANEL SNAP FIN RAIL MOUNT SNAP-12XX

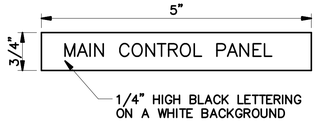

2 NAMEPLATE DETAIL
SCALE: NONE

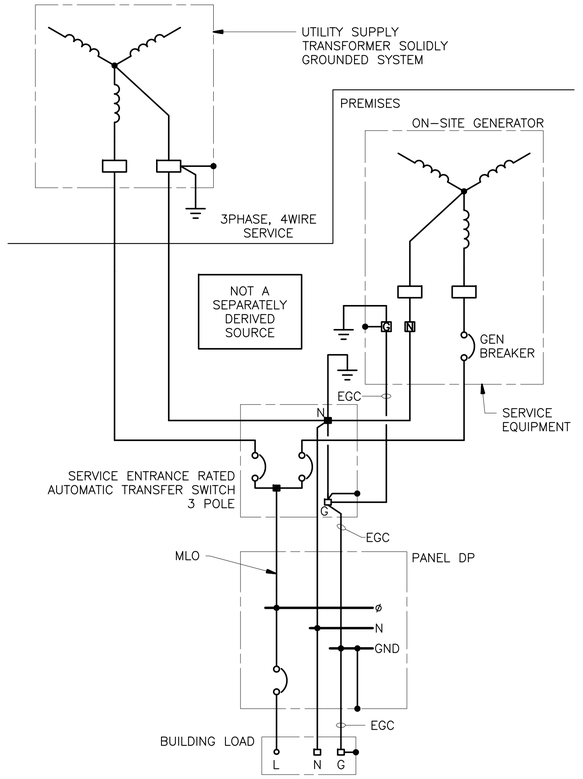

4 GROUNDING DIAGRAM SERVICE ENTRANCE 3 POLE
SCALE: NONE

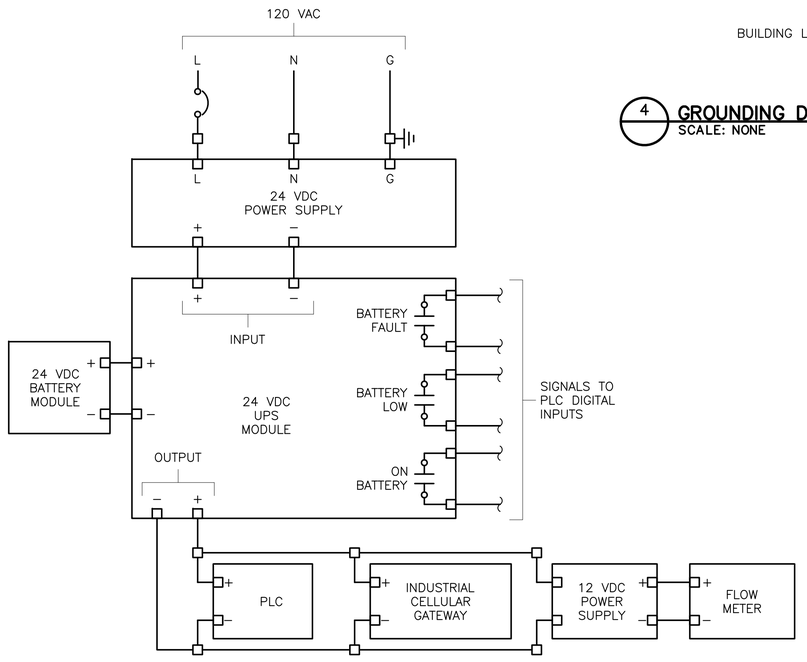

3 REMOTE TERMINAL UNIT "RTU" POWER SUPPLY
SCALE: NONE

WALL ENGINEERING
PO BOX 1457, DURANT, OK 74702
OKLAHOMA CA #5413 EXP. JUNE 30, 2023

SUBMITTAL / REVISIONS:

DATE	BY	SUBMITTAL / REVISION

SHAWNEE MUNICIPAL AUTHORITY
WASTEWATER SYSTEM IMPROVEMENTS
SHAWNEE, OKLAHOMA

ELECTRICAL DETAILS

PROJECT NO. SHN-20-01
DATE 06/22
DRAWN BY: CD
CHECKED BY: BB
REVIEWED BY: BB
SCALE: AS SHOWN

BAR IS ONE INCH ON ORIGINAL DRAWING
0" 1"
IF NOT ONE INCH ON THIS SHEET, ADJUST SCALES ACCORDINGLY

SHEET
EN6

REGISTERED PROFESSIONAL ENGINEER
BRUCE W. BROWN
20995
06-01-2022
OKLAHOMA

BROWN ENGINEERS
501-448-0100

P:\PRODUCTION\PROJECTS\WALL ENGINEERING (WE)\WE-055 SHAWNEE NORTHSIDE WASTEWATER TREATMENT PLANT\DWG\EN6.DWG
6/2/2022 3:36 PM

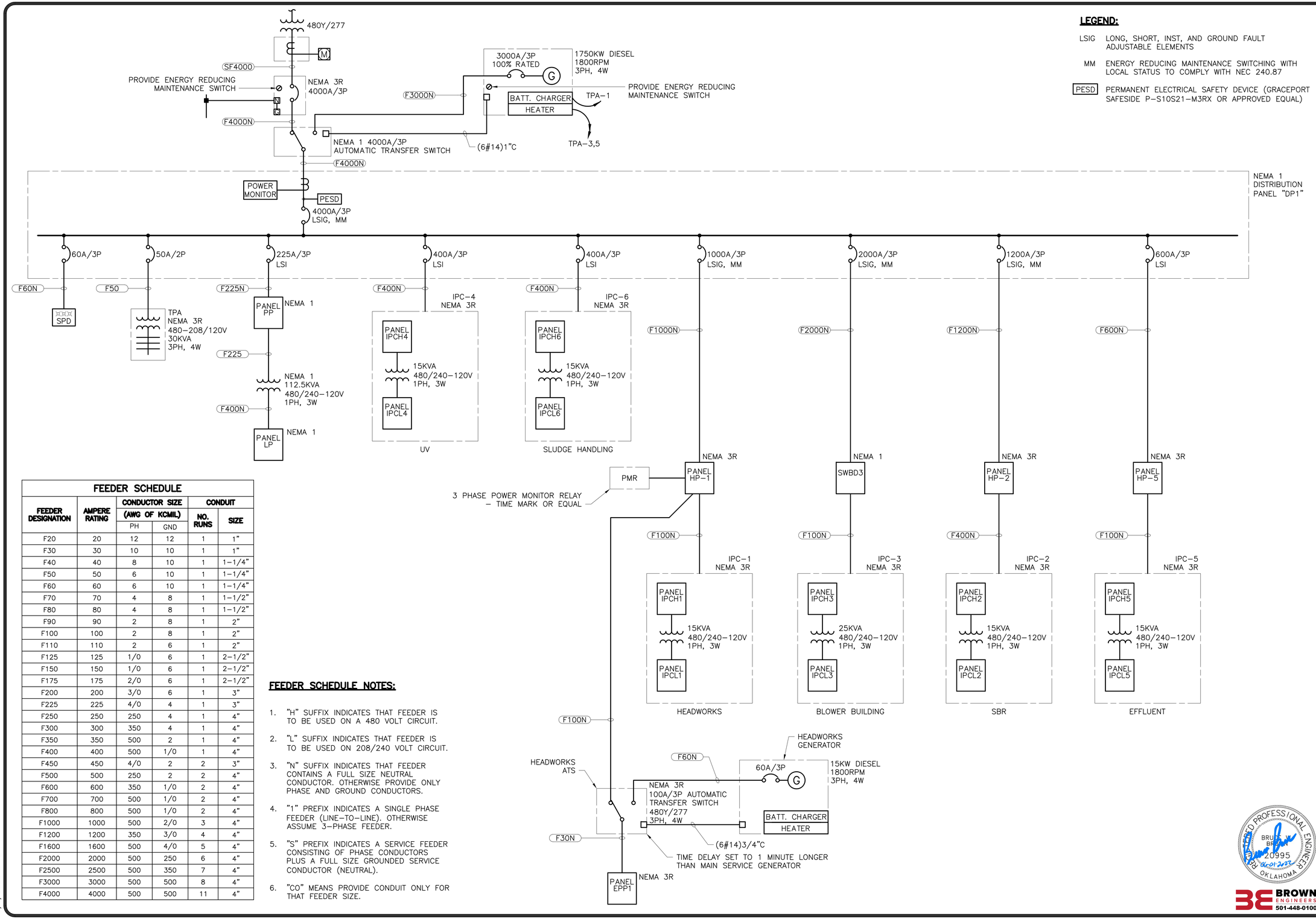

LEGEND:

LSIG LONG, SHORT, INST, AND GROUND FAULT ADJUSTABLE ELEMENTS

MM ENERGY REDUCING MAINTENANCE SWITCHING WITH LOCAL STATUS TO COMPLY WITH NEC 240.87

PESD PERMANENT ELECTRICAL SAFETY DEVICE (GRACEPORT SAFESIDE P-S10S21-M3RX OR APPROVED EQUAL)

FEEDER SCHEDULE

FEEDER DESIGNATION	AMPERE RATING	CONDUCTOR SIZE (AWG OF KCMIL)		CONDUIT	
		PH	GND	NO. RUNS	SIZE
F20	20	12	12	1	1"
F30	30	10	10	1	1"
F40	40	8	10	1	1-1/4"
F50	50	6	10	1	1-1/4"
F60	60	6	10	1	1-1/4"
F70	70	4	8	1	1-1/2"
F80	80	4	8	1	1-1/2"
F90	90	2	8	1	2"
F100	100	2	8	1	2"
F110	110	2	6	1	2"
F125	125	1/0	6	1	2-1/2"
F150	150	1/0	6	1	2-1/2"
F175	175	2/0	6	1	2-1/2"
F200	200	3/0	6	1	3"
F225	225	4/0	4	1	3"
F250	250	250	4	1	4"
F300	300	350	4	1	4"
F350	350	500	2	1	4"
F400	400	500	1/0	1	4"
F450	450	4/0	2	2	3"
F500	500	250	2	2	4"
F600	600	350	1/0	2	4"
F700	700	500	1/0	2	4"
F800	800	500	1/0	2	4"
F1000	1000	500	2/0	3	4"
F1200	1200	350	3/0	4	4"
F1600	1600	500	4/0	5	4"
F2000	2000	500	250	6	4"
F2500	2500	500	350	7	4"
F3000	3000	500	500	8	4"
F4000	4000	500	500	11	4"

FEEDER SCHEDULE NOTES:

1. "H" SUFFIX INDICATES THAT FEEDER IS TO BE USED ON A 480 VOLT CIRCUIT.
2. "L" SUFFIX INDICATES THAT FEEDER IS TO BE USED ON 208/240 VOLT CIRCUIT.
3. "N" SUFFIX INDICATES THAT FEEDER CONTAINS A FULL SIZE NEUTRAL CONDUCTOR. OTHERWISE PROVIDE ONLY PHASE AND GROUND CONDUCTORS.
4. "1" PREFIX INDICATES A SINGLE PHASE FEEDER (LINE-TO-LINE). OTHERWISE ASSUME 3-PHASE FEEDER.
5. "S" PREFIX INDICATES A SERVICE FEEDER CONSISTING OF PHASE CONDUCTORS PLUS A FULL SIZE GROUNDED SERVICE CONDUCTOR (NEUTRAL).
6. "CO" MEANS PROVIDE CONDUIT ONLY FOR THAT FEEDER SIZE.

WALL ENGINEERING
PO BOX 1457, DURANT, OK 74702
OKLAHOMA CA #5413 EXP. JUNE 30, 2023

SUBMITTAL / REVISIONS:

DATE	BY	SUBMITTAL / REVISION

SHAWNEE MUNICIPAL AUTHORITY
WASTEWATER SYSTEM IMPROVEMENTS
SHAWNEE, OKLAHOMA

ELECTRICAL ONE-LINE

PROJECT NO.	SHN-20-01
DATE	06/22
DRAWN BY:	CD
CHECKED BY:	BB
REVIEWED BY:	BB
SCALE:	AS SHOWN

BAR IS ONE INCH ON ORIGINAL DRAWING
0" 1"
IF NOT ONE INCH ON THIS SHEET, ADJUST SCALES ACCORDINGLY

SHEET

EP1

REGISTERED PROFESSIONAL ENGINEER
BRUCE W. BROWN
20995
OKLAHOMA
06-01-2022

BROWN ENGINEERS
501-448-0100

P:\PRODUCTION\PROJECTS\WALL ENGINEERING (WE)\WE-055 SHAWNEE NORTHSIDE WASTEWATER TREATMENT PLANT\DWG\EP1.DWG
6/1/2022 2:42 PM

Switchboard: DP1

Location:
Supply From:
Mounting: Floor
Enclosure: 3R

Volts: 480/277 Wye
Phases: 3
Wires: 4

A.I.C. Rating: 100,000
Mains Type: MCB
Mains Rating: 4000 A
MCB Rating: 4000 A

Notes:

Circuit Number	Circuit Description	Load	AMPS	Rating	Poles	Frame	Remarks
1	PP	97.42 kVA	117.17 A	225 A	3	400 A	
2	HP1	440.17 kVA	529.44 A	1,000 A	3	1200 A	
3	HP2	559.10 kVA	672.49 A	1,200 A	3	1200 A	
4	SWBD3	1108.67 kVA	1333.52 A	2,000 A	3	2000 A	
5	IPCH4	194.57 kVA	234.03 A	400 A	3	400 A	
6	HP5	261.69 kVA	314.76 A	600 A	3	600 A	
7	IPCH6	133.81 kVA	160.95 A	400 A	3	400 A	
8	SPARE	0.00 kVA	--	100 A	3	400 A	
9	SPARE	0.00 kVA	--	400 A	3	400 A	
10	SPARE	0.00 kVA	--	225 A	3	400 A	
11	SPD	0.10 kVA	--	60 A	3	400 A	
12	TPA	5.00 kVA	--	150 A	3	400 A	

Panel Totals

	Phase A	Phase B	Phase C
Total Load:	942.46 kVA	934.88 kVA	923.19 kVA
Total Amps:	3,409 A	3,382 A	3,333 A
Total Connected Load:	2800.53 kVA		
Total Connected Amps:	3,374 A		

Notes:

Branch Panel: PP

Location: ELECTRIC ROOM 104
Supply From: DP1
Mounting: Surface
Enclosure: 1

Volts: 480/277 Wye
Phases: 3
Wires: 4

A.I.C. Rating: 100,000
Panel Rating: 225 A MLO

Notes:

CKT	Load Name	Trip	Poles	A	B	C	A	B	C	Poles	Trip	Load Name	CKT
1				2.50			0.37						2
3	WEUH-4	20 A	3		2.50			0.37		3	15 A	WEF-2	4
5						2.50			0.37				6
7	LIGHTING ELECTRIC/STORAGE/SLUDGE	20 A	1	0.50			0.72			1	20 A	BUILDING EXTERIOR LIGHTING	8
9	SPARE	20 A	1		0.00			4.10					10
11						25.68			4.10	3	20 A	WH-1 (1)	12
13	TP	225 A	3	25.25			4.10						14
15					24.37			0.00					16
17	SPARE	20 A	1			0.00			0.00	3	20 A	SPARE	18
19	SPARE	20 A	1	0.00			0.00						20
21	SPARE	20 A	1		0.00			0.00					22
23	SPARE	20 A	1			0.00			0.00	3	15 A	SPARE	24
25	SPARE	20 A	1	0.00			0.00						26
27	SPARE	20 A	1		0.00			0.00		1	20 A	SPARE	28
29	SPARE	20 A	1			0.00			0.00	1	20 A	SPARE	30
31	SPARE	20 A	1	0.00			0.00			1	20 A	SPARE	32
33	SPARE	20 A	1		0.00			0.00		1	20 A	SPARE	34
35	SPARE	20 A	1			0.00			0.00	1	20 A	SPARE	36
37	SPARE	20 A	1	0.00			0.00			1	20 A	SPARE	38
39	SPARE	20 A	1		0.00			0.00		1	20 A	SPARE	40
41	SPARE	20 A	1			0.00			0.00	1	20 A	SPARE	42

Panel Totals

	PHASE A	PHASE B	PHASE C
Total Load:	33.41 kVA	31.35 kVA	32.66 kVA
Total Amps:	121 A	113 A	119 A
Total Conn. Load:	97.42 kVA		
Total Design Current:	184 A		

Notes:

Branch Panel: LP

Location: ELECTRIC ROOM 104
Supply From: TP
Mounting: Surface
Enclosure: 1

Volts: 120/208 Wye
Phases: 3
Wires: 4

A.I.C. Rating: 22kA
Panel Rating: 400 A MCB

Notes:

CKT	Load Name	Trip	Poles	A	B	C	A	B	C	Poles	Trip	Load Name	CKT
1	LIGHTING CORRIDORS	20 A	1	0.83			0.36			1	20 A	RECEPTACLES LAB 118	2
3	LIGHTING OFFICES	20 A	1		1.30			0.54		1	20 A	RECEPTACLES Room 121, 122, 119	4
5	RECEPTACLES BREAK ROOM 123	20 A	1			0.18			0.36	1	20 A	ROOFTOP RECEPTACLES	6
7	RECEPTACLES BREAK ROOM 123	20 A	1	0.18			0.90			1	20 A	RECEPTACLES ELECTRIC ROOM 104	8
9	DISHWASHER	20 A	1		1.50			0.72		1	20 A	RECEPTACLES STOR. 105	10
11	DISPOSAL BREAKROOM	20 A	1			1.20			1.50	1	20 A	VCP-1031	12
13	REFRIGERATOR	20 A	1	1.20			5.38			2	60 A	AHU-1	14
15	VENDING MACHINE	20 A	1		0.18			5.38					16
17	VENDING MACHINE	20 A	1			0.18			5.38	2	60 A	AHU-2	18
19	RECEPTACLES BREAKROOM	20 A	1	0.72			5.38						20
21	RECEPTACLES CORRIDORS	20 A	1		0.54			5.38		2	60 A	AHU-3	22
23	RECEPTACLES OFFICE 113	20 A	1			0.54			5.38				24
25	RECEPTACLES OFFICE 109	20 A	1	0.54			2.21						26
27	RECEPTACLES OFFICE 103	20 A	1		0.54			2.21		3	30 A	CU-1	28
29	RECEPTACLES OFFICE 115	20 A	1			0.54			2.21				30
31	RECEPTACLES CONFERENCE 116	20 A	1	0.90			2.55						32
33	RECEPTACLES LAB 118	20 A	1		0.36			2.55		3	35 A	CU-2	34
35	RECEPTACLES LAB 118	20 A	1			0.36			2.55				36
37	RECEPTACLES LAB 118	20 A	1	0.36			2.55						38
39	RECEPTACLES LAB 118	20 A	1		0.36			2.55		3	35 A	CU-3	40
41	RECEPTACLES LAB 118	20 A	1			0.36			2.55				42
43	RECEPTACLES ELECTRIC ROOM 104	20 A	1	0.36			0.54			1	20 A	EXTERIOR RECEPTACLES	44
45	RECEPTACLES ELECTRIC ROOM 104	20 A	1		0.36			0.05		1	20 A	PUMP-1 (1)	46
47	RECEPTACLES ELECTRIC ROOM 104	20 A	1			0.36			0.00	1	20 A	RTU-E	48
49	RECEPTACLES LIBRARY 114	20 A	1	0.36			0.00			1	20 A	SPARE	50
51	RECEPTACLES LIBRARY 114	20 A	1		0.36			0.00		1	20 A	SPARE	52
53	RECEPTACLES LIBRARY 114	20 A	1			0.36			0.00	1	20 A	SPARE	54
55	RECEPTACLES LIBRARY 114	20 A	1	0.36			0.00			1	20 A	SPARE	56
57	RECEPTACLES LIBRARY 114	20 A	1		0.36			0.00		1	20 A	SPARE	58
59	RECEPTACLES LIBRARY 114	20 A	1			0.36			0.00	1	20 A	SPARE	60
61	SPARE	20 A	1	0.00			0.00			1	20 A	SPARE	62
63	SPARE	20 A	1		0.00			0.00		1	20 A	SPARE	64
65	SPARE	20 A	1			0.00			0.00	1	20 A	SPARE	66

Panel Totals

	PHASE A	PHASE B	PHASE C
Total Load:	25.68 kVA	25.25 kVA	24.37 kVA
Total Amps:	215 A	212 A	203 A
Total Conn. Load:	75.31 kVA		
Total Design Current:	328 A		

Notes:

PANELBOARD NOTES

(1) INSTALL LOCKING DEVICE (LOCK-OFF FOR MAINTENANCE)

(2) INSTALL LOCKING DEVICE (LOCK-ON FOR CRITICAL LOAD).

(3) REFER TO SITE LIGHTING PLAN FOR WIRE SIZES.

(4) PROVIDE GFI CIRCUIT BREAKER OR INLINE GFI FOR PERSONNEL PROTECTION (5 mA).

(5) PROVIDE GFI CIRCUIT BREAKER OR INLINE GFI FOR EQUIPMENT PROTECTION (30 mA).

(6) PROVIDE U.L. LISTED OVERCURRENT DEVICE TO COORDINATE AND MAINTAIN MANUFACTURER'S SERIES RATED SYSTEM.

(7) EXISTING CIRCUIT TO REMAIN.

(8) EXISTING CIRCUIT BREAKER TO REMAIN. VERIFY CONDITION OF CIRCUIT BREAKER TO ENSURE THAT IT IS OPERATIONAL AND MEETS ALL U.L. RATINGS.

(9) TRACE EXISTING CIRCUIT, IDENTIFY LOAD AND PROVIDE TYPEWRITTEN PANELBOARD SCHEDULE AND PLACE ON INTERIOR OF PANELBOARD DOOR. IF CIRCUIT IS A "SPARE", REFER TO NOTE (8).

IN IN ADDITION TO CIRCUIT BREAKERS SHOWN IN PANEL SCHEDULES, FURNISH THE FOLLOWING SPARE CIRCUIT BREAKERS AND INCREASE THE SIZE OF THE PANELBOARDS/SWITCHBOARDS TO ACCOMMODATE THE INSTALLATION OF THESE SPARE CIRCUIT BREAKERS:

DP1
(4) 600A/3P
(4) 400A/3P
(4) 200A/3P
(6) 20A/3P

HP1
(4) 30A/3P
(6) 20A/3P

HP2
(4) 30A/3P
(4) 20A/3P
(1) 20A/3P – FCV-12a
(1) 20A/3P – FCV-12b
(1) 20A/3P – FCV-12c
(6) 20A/3P

SWBD3
(4) 400A/3P
(4) 200A/3P
(6) 20A/3P

HP5
(4) 30A/3P
(6) 20A/3P

PP
(6) 20A/3P

WALL ENGINEERING
PO BOX 1457, DURANT, OK 74702
OKLAHOMA CA #5413 EXP. JUNE 30, 2023

SUBMITTAL / REVISIONS:

DATE	BY	SUBMITTAL / REVISION
.	.	.
.	.	.
.	.	.
.	.	.
.	.	.
.	.	.

SHAWNEE MUNICIPAL AUTHORITY
WASTEWATER SYSTEM IMPROVEMENTS
SHAWNEE, OKLAHOMA

ELECTRICAL SCHEDULES

PROJECT NO.
SHN-20-01
DATE
06/22
DRAWN BY:
CD
CHECKED BY:
BB
REVIEWED BY:
BB
SCALE:
AS SHOWN

BAR IS ONE INCH ON ORIGINAL DRAWING
0" 1"
IF NOT ONE INCH ON THIS SHEET, ADJUST SCALES ACCORDINGLY

SHEET
EP2

REGISTERED PROFESSIONAL ENGINEER
BRUCE W. BROWN
20995
06-01-2022
OKLAHOMA

BROWN ENGINEERS
501-448-0100

P:\PRODUCTION\PROJECTS\WALL ENGINEERING (WE)\WE-055 SHAWNEE NORTHSIDE WASTEWATER TREATMENT PLANT\DWG\EP2.DWG
6/2/2022 3:42 PM

Branch Panel: HP1

Location:
Supply From: DP1
Mounting: Surface
Enclosure: NEMA 3R

Volts: 480/277 Wye
Phases: 3
Wires: 4

A.I.C. Rating: 100,000
Panel Rating: 1,200 A MLO

Notes:

CKT	Load Name	Trip	Poles	A	B	C	A	B	C	Poles	Trip	Load Name	CKT
1				26.60			26.60						2
3	VFD-4044	125 A	3		26.60			26.60		3	125 A	VFD-4043	4
5						26.60			26.60				6
7				26.60			26.60						8
9	VFD-4042	125 A	3		26.60			26.60		3	125 A	VFD-4041	10
11						26.60			26.60				12
13				7.48			7.48						14
15	VCP-2232	60 A	3		7.48			7.48		3	60 A	VCP-2131	16
17						7.48			7.48				18
19				21.65			1.17						20
21	IPCH1	100 A	3		19.57			1.17		3	30 A	EPP1 ATS	22
23						18.18			1.17				24
25				3.88			0.00						26
27	BRIDGE CRANE	25 A	3		3.88			0.00		3	20 A	POWER MONITOR	28
29						3.88			0.00				30
31	SITE LIGHTING	20 A	1	1.50			0.00						32
33	SPARE	20 A	1		0.00			0.00		3	25 A	HOIST	34
35	SPARE	20 A	1			0.00			0.00				36
37				0.00			0.00						38
39	SPARE	15 A	3		0.00			0.00		3	60 A	SPARE	40
41						0.00			0.00				42

Panel Totals

	PHASE A	PHASE B	PHASE C
Total Load:	149.57 kVA	145.99 kVA	144.60 kVA
Total Amps:	541 A	528 A	522 A
Total Conn. Load:	440.17 kVA		
Total Design Current:	828 A		

Notes:

Branch Panel: IPCL1

Location:
Supply From: IPC-1 T
Mounting: Surface
Enclosure: NEMA 3R

Volts: 120/240 Single
Phases: 1
Wires: 3

A.I.C. Rating: 10kA
Panel Rating: 80 A MCB

Notes:

CKT	Load Name	Trip	Poles	A	B	A	B	Poles	Trip	Load Name	CKT
1	AAH-4082	20 A	1	0.05		0.05		1	20 A	FIT-2221	2
3	FIT-2321	20 A	1		0.05		0.05	1	20 A	FIT-2121	4
5	FIT-4024	20 A	1	0.05		0.05		1	20 A	FIT-4023	6
7	FIT-4022	20 A	1		0.05		0.05	1	20 A	FIT-4021	8
9	VCP-4031	20 A	1	1.50		1.08		1	20 A	RECEPTACLES	10
11	RTU-A	20 A	1		1.50		0.05	1	20 A	LIT-4031a	12
13	AAH-4081	20 A	1	0.05		1.50		1	20 A	GEN BLOCK HEATER	14
15	CAMERAS	20 A	1		0.10		0.50	1	20 A	GEN BATTERY CHARGER	16
17	CAMERAS	20 A	1	0.10		0.00		1	20 A	SPARE	18
19	HEAT TRACE	20 A	1		0.00		0.00	1	20 A	SPARE	20
21	HEAT TRACE	20 A	1	0.00		0.00		1	20 A	SPARE	22
23	HEAT TRACE	20 A	1		0.00		0.00	1	20 A	SPARE	24
25	HEAT TRACE	20 A	1	0.00		0.00		1	20 A	SPARE	26
27	HEAT TRACE	20 A	1		0.00		0.00	1	20 A	SPARE	28
29	SPARE	20 A	1	0.00		0.00		1	20 A	SPARE	30
31	SPARE	20 A	1		0.00		0.00	1	20 A	SPARE	32
33	SPARE	20 A	1	0.00		0.00		1	20 A	SPARE	34
35	SPARE	20 A	1		0.00		0.00	1	20 A	SPARE	36
37	SPARE	20 A	1	0.00		0.00		1	20 A	SPARE	38
39	SPARE	20 A	1		0.00		0.00	1	20 A	SPARE	40
41	SPARE	20 A	1	0.00		0.00		1	20 A	SPARE	42

Panel Totals

	PHASE A	PHASE B
Total Load:	4.43 kVA	2.35 kVA
Total Amps:	36.92 A	19.58 A
Total Conn. Load:	6.78 kVA	
Total Design Current:	44 A	

Notes:

Branch Panel: IPCH1

Location:
Supply From: HP1
Mounting: Surface
Enclosure: NEMA 3R

Volts: 480/277 Wye
Phases: 3
Wires: 4

A.I.C. Rating: 100,000
Panel Rating: 100 A MLO

Notes:

CKT	Load Name	Trip	Poles	A	B	C	A	B	C	Poles	Trip	Load Name	CKT
1	IPCT1	35 A	2	4.43			3.88						2
3					2.35			3.88		3	30 A	VCP-1231	4
5	LIGHTING	20 A	1			1.01			3.88				6
7				0.58			0.58						8
9	FCV-1212	15 A	3		0.58			0.58		3	15 A	FCV-3311	10
11						0.58			0.58				12
13				0.58			0.58						14
15	FCV-1112	15 A	3		0.58			0.58		3	15 A	FCV-4011	16
17						0.58			0.58				18
19				0.58			0.58						20
21	FCV-2312	15 A	3		0.58			0.58		3	15 A	FCV-2313	22
23						0.58			0.58				24
25				0.58			0.58						26
27	FCV-4014	15 A	3		0.58			0.58		3	15 A	FCV-4013	28
29						0.58			0.58				30
31				0.58			2.11						32
33	FCV-4012	15 A	3		0.58			2.11		3	15 A	WINCH	34
35						0.58			2.11				36
37				3.88			2.11						38
39	VCP-1131	30 A	3		3.88			2.11		3	15 A	WINCH	40
41						3.88			2.11				42

Panel Totals

	PHASE A	PHASE B	PHASE C
Total Load:	21.65 kVA	19.57 kVA	18.18 kVA
Total Amps:	79 A	71 A	66 A
Total Conn. Load:	59.39 kVA		
Total Design Current:	112 A		

Notes:

Branch Panel: EPP1

Location:
Supply From: HP1
Mounting: Surface
Enclosure: NEMA 3R

Volts: 480/277 Wye
Phases: 3
Wires: 4

A.I.C. Rating: 100,000
Panel Rating: 100 A MLO

Notes:

CKT	Load Name	Trip	Poles	A	B	C	A	B	C	Poles	Trip	Load Name	CKT
1				0.58			--			1	--	SPACE	2
3	FCV-1111	15 A	3		0.58			--		1	--	SPACE	4
5						0.58			--	1	--	SPACE	6
7				0.58			--			1	--	SPACE	8
9	FCV-1211	15 A	3		0.58			--		1	--	SPACE	10
11						0.58			--	1	--	SPACE	12
13				0.00			--			1	--	SPACE	14
15	SPARE	15 A	3		0.00			--		1	--	SPACE	16
17						0.00			--	1	--	SPACE	18
19				0.00			--			1	--	SPACE	20
21	SPARE	15 A	3		0.00			--		1	--	SPACE	22
23						0.00			--	1	--	SPACE	24
25	SPARE	20 A	1	0.00			--			1	--	SPACE	26
27	SPARE	20 A	1		0.00			--		1	--	SPACE	28
29	SPARE	20 A	1			0.00			--	1	--	SPACE	30
31	SPARE	20 A	1	0.00			--			1	--	SPACE	32
33	SPARE	20 A	1		0.00			--		1	--	SPACE	34
35	SPARE	20 A	1			0.00			--	1	--	SPACE	36
37	SPARE	20 A	1	0.00			--			1	--	SPACE	38
39	SPARE	20 A	1		0.00			--		1	--	SPACE	40
41	SPARE	20 A	1			0.00			--	1	--	SPACE	42

Panel Totals

	PHASE A	PHASE B	PHASE C
Total Load:	1.17 kVA	1.17 kVA	1.17 kVA
Total Amps:	4 A	4 A	4 A
Total Conn. Load:	3.50 kVA		
Total Design Current:	7 A		

Notes:

WALL ENGINEERING
PO BOX 1457, DURANT, OK 74702
OKLAHOMA CA #5413 EXP. JUNE 30, 2023

SUBMITTAL / REVISIONS:

DATE	BY	SUBMITTAL / REVISION
. .	. .	. .

SHAWNEE MUNICIPAL AUTHORITY
WASTEWATER SYSTEM IMPROVEMENTS
SHAWNEE, OKLAHOMA

ELECTRICAL SCHEDULES

PROJECT NO.
SHN–20–01
DATE
06/22
DRAWN BY:
CD
CHECKED BY:
BB
REVIEWED BY:
BB
SCALE:
AS SHOWN

BAR IS ONE INCH ON ORIGINAL DRAWING
0" 1"
IF NOT ONE INCH ON THIS SHEET, ADJUST SCALES ACCORDINGLY

SHEET
EP3

BRUCE BROWN
20995
REGISTERED PROFESSIONAL ENGINEER
OKLAHOMA
06-01-2022
BROWN ENGINEERS
501-448-0100

P:\PRODUCTION\PROJECTS\WALL ENGINEERING (WE)\WE-055 SHAWNEE NORTHSIDE WASTEWATER TREATMENT PLANT\DWG\EP3.DWG
6/1/2022 2:47 PM

Branch Panel: HP2

Location:
Supply From: DP1
Mounting: Surface
Enclosure: NEMA 3R

Volts: 480/277 Wye
Phases: 3
Wires: 4

A.I.C. Rating: 100,000
Panel Rating: 1,200 A MLO

Notes:

CKT	Load Name	Trip	Poles	A	B	C	A	B	C	Poles	Trip	Load Name	CKT
1				14.56			14.41						2
3	IPCH2	400 A	3		12.52			14.41		3	90 A	VFD-8044	4
5						11.42			14.41				6
7				14.41			14.41						8
9	VFD-8043	90 A	3		14.41			14.41		3	90 A	VFD-8042	10
11						14.41			14.41				12
13				14.41			11.09						14
15	VFD-8041	90 A	3		14.41			11.09		3	80 A	VFD-2741	16
17						14.41			11.09				18
19				11.09			3.88						20
21	VFD-2742	80 A	3		11.09			3.88		3	25 A	MTR-2743	22
23						11.09			3.88				24
25				2.49			2.49						26
27	FVNR-8012	25 A	3		2.49			2.49		3	25 A	FVNR-8011	28
29						2.49			2.49				30
31				26.60			26.60						32
33	FVNR-1043	125 A	3		26.60			26.60		3	125 A	FVNR-1042	34
35						26.60			26.60				36
37				26.60			0.58						38
39	FVNR-1041	125 A	3		26.60			0.58		3	15 A	FCV-1017	40
41						26.60			0.58				42
43				0.58			0.00						44
45	FCV-1014	15 A	3		0.58			0.00		3	25 A	HOIST	46
47						0.58			0.00				48
49				3.88			0.00						50
51	BRIDGE CRANE	25 A	3		3.88			0.00		3	25 A	HOIST	52
53						3.88			0.00				54

Panel Totals

	PHASE A	PHASE B	PHASE C
Total Load:	188.09 kVA	186.05 kVA	184.95 kVA
Total Amps:	680 A	672 A	668 A
Total Conn. Load:	559.10 kVA		
Total Design Current:	1,052 A		

Notes:

Branch Panel: IPCH2

Location:
Supply From: HP2
Mounting: Surface
Enclosure: NEMA 3R

Volts: 480/277 Wye
Phases: 3
Wires: 4

A.I.C. Rating: 100,000
Panel Rating: 400 A MLO

Notes:

CKT	Load Name	Trip	Poles	A	B	C	A	B	C	Poles	Trip	Load Name	CKT
1				4.64			0.58						2
3	IPCT2	35 A	2		2.60			0.58		3	15 A	FCV-9014	4
5	SITE LIGHTING	20 A	1			1.50			0.58				6
7				0.58			0.58						8
9	FCV-9013	15 A	3		0.58			0.58		3	15 A	FCV-9012	10
11						0.58			0.58				12
13				0.58			0.58						14
15	FCV-9011	15 A	3		0.58			0.58		3	15 A	FCV-8051	16
17						0.58			0.58				18
19				0.58			0.58						20
21	FCV-8052	15 A	3		0.58			0.58		3	15 A	FCV-1019	22
23						0.58			0.58				24
25				0.58			0.58						26
27	FCV-1018	15 A	3		0.58			0.58		3	15 A	FCV-1015	28
29						0.58			0.58				30
31				0.58			0.58						32
33	FCV-1012	15 A	3		0.58			0.58		3	15 A	FCV-1013	34
35						0.58			0.58				36
37				0.58			0.58						38
39	FCV-1016	15 A	3		0.58			0.58		3	15 A	FCV-1103	40
41						0.58			0.58				42
43				0.58			0.58						44
45	FCV-1104	15 A	3		0.58			0.58		3	15 A	FCV-1102	46
47						0.58			0.58				48
49				0.58			0.58						50
51	FCV-1101	15 A	3		0.58			0.58		3	15 A	FCV-1011	52
53						0.58			0.58				54

Panel Totals

	PHASE A	PHASE B	PHASE C
Total Load:	14.56 kVA	12.52 kVA	11.42 kVA
Total Amps:	53 A	46 A	41 A
Total Conn. Load:	38.49 kVA		
Total Design Current:	73 A		

Notes:

Branch Panel: IPCL2

Location:
Supply From: IPC2T
Mounting: Surface
Enclosure: NEMA 3R

Volts: 120/240 Single
Phases: 1
Wires: 3

A.I.C. Rating: 10kA
Panel Rating: 80 A MCB

Notes:

CKT	Load Name	Trip	Poles	A	B	A	B	Poles	Trip	Load Name	CKT
1	FIT-9024	20 A	1	0.05		0.54		1	20 A	RECEPTACLES	2
3	FIT 9021	20 A	1		0.05		0.05	1	20 A	LIT-2731B	4
5	LIT-8031A	20 A	1	0.05		0.05		1	20 A	FIT-2821	6
7	RTU-B	20 A	1		1.50		0.10	1	20 A	CAMERAS	8
9	FIT 9023	20 A	1	0.05		0.10		1	20 A	CAMERAS	10
11	FIT 9022	20 A	1		0.05		0.50	1	20 A	TB-DIG (A)	12
13	VCP-8031	20 A	1	1.50		0.50		1	20 A	TB-DIG (D)	14
15	LIT-1073	20 A	1		0.05		0.00	1	20 A	SPARE	16
17	AIT-1085	20 A	1	0.05		0.00		1	20 A	SPARE	18
19	AIT-1086	20 A	1		0.05		0.00	1	20 A	SPARE	20
21	LIT-1072	20 A	1	0.05		0.00		1	20 A	SPARE	22
23	AIT-1083	20 A	1		0.05		0.00	1	20 A	SPARE	24
25	AIT-1084	20 A	1	0.05		0.00		1	20 A	SPARE	26
27	LIT-1071	20 A	1		0.05		0.00	1	20 A	SPARE	28
29	AIT-1081	20 A	1	0.05		0.00		1	20 A	SPARE	30
31	AIT-1082	20 A	1		0.05		0.00	1	20 A	SPARE	32
33	VCP-2731	20 A	1	1.50		0.00		1	20 A	SPARE	34
35	AIT-1183	20 A	1		0.05		0.00	1	20 A	SPARE	36
37	AIT-1184	20 A	1	0.05		0.00		1	20 A	SPARE	38
39	AIT-1181	20 A	1		0.05		0.00	1	20 A	SPARE	40
41	AIT-1182	20 A	1	0.05		0.00		1	20 A	SPARE	42

Panel Totals

	PHASE A		PHASE B
Total Load:	4.64 kVA		2.60 kVA
Total Amps:	38.67 A		21.67 A
Total Conn. Load:	7.24 kVA		
Total Design Current:	47 A		

Notes:

WALL ENGINEERING
PO BOX 1457, DURANT, OK 74702
OKLAHOMA CA #5413 EXP. JUNE 30, 2023

SUBMITTAL / REVISIONS:

DATE	BY	SUBMITTAL / REVISION
.	.	.
.	.	.
.	.	.
.	.	.
.	.	.
.	.	.

SHAWNEE MUNICIPAL AUTHORITY
WASTEWATER SYSTEM IMPROVEMENTS
SHAWNEE, OKLAHOMA

ELECTRICAL SCHEDULES

PROJECT NO.
SHN–20–01
DATE
06/22
DRAWN BY:
CD
CHECKED BY:
BB
REVIEWED BY:
BB
SCALE:
AS SHOWN

BAR IS ONE INCH ON ORIGINAL DRAWING
0' 1'
IF NOT ONE INCH ON THIS SHEET, ADJUST SCALES ACCORDINGLY

SHEET
EP4



BROWN ENGINEERS
501-448-0100

P:\PRODUCTION\PROJECTS\WALL ENGINEERING (WE)\WE-055 SHAWNEE NORTHSIDE WASTEWATER TREATMENT PLANT\DWG\EP4.DWG
6/1/2022 2:49 PM

Switchboard: SWBD3

Location: BLOWER SHED --
Supply From: DP1
Mounting: Floor
Enclosure: 3R

Volts: 480/277 Wye
Phases: 3
Wires: 4

A.I.C. Rating: 100,000
Mains Type: MCB
Mains Rating: 2000 A
MCB Rating: 2000 A

Notes:

Circuit Number	Circuit Description	Load	AMPS	Rating	Poles	Frame	Remarks
1	IPCH3	42.42 kVA	51.02 A	100 A	3	400 A	
2	LCP-1346	149.65 kVA	180.00 A	250 A	3	400 A	
3	LCP-1343	149.66 kVA	180.01 A	250 A	3	400 A	
4	LCP-1344	149.66 kVA	180.01 A	250 A	3	400 A	
5	LCP-1345	149.66 kVA	180.01 A	250 A	3	400 A	
6	LCP-1341	199.53 kVA	240.00 A	350 A	3	400 A	
7	LCP-1342	199.53 kVA	240.00 A	350 A	3	400 A	
8	EUH-7	7.50 kVA	9.02 A	20 A	3	400 A	
9	EUH-8	7.50 kVA	9.02 A	20 A	3	400 A	
10	EUH-9	7.50 kVA	9.02 A	20 A	3	400 A	
11	EUH-10	7.50 kVA	9.02 A	20 A	3	400 A	
12	EUH-11	7.50 kVA	9.02 A	20 A	3	400 A	
13	EUH-12	7.50 kVA	9.02 A	20 A	3	400 A	
14	WEF-3	1.12 kVA	1.35 A	15 A	3	400 A	
15	VCP-1731	22.45 kVA	27.00 A	60 A	3	400 A	
16	SPARE	0.00 kVA	--	100 A	3	400 A	
17	SPARE	0.00 kVA	--	250 A	3	400 A	
18	SPARE	0.00 kVA	--	350 A	3	400 A	

Panel Totals

	Phase A	Phase B	Phase C
Total Load:	372.13 kVA	371.50 kVA	365.03 kVA
Total Amps:	1,347 A	1,345 A	1,318 A
Total Connected Load:	1108.67 kVA		
Total Connected Amps:	1,337 A		

Notes:

Branch Panel: IPCH3

Location: BLOWER SHED --
Supply From: SWBD3
Mounting: Surface
Enclosure: NEMA 3R

Volts: 480/277 Wye
Phases: 3
Wires: 4

A.I.C. Rating: 100,000
Panel Rating: 100 A MLO

Notes:

CKT	Load Name	Trip	Poles	A	B	C	A	B	C	Poles	Trip	Load Name	CKT
1	IPCT3	70 A	2	9.13			0.58			3	15 A	FCV-1313	2
3					8.50			0.58					4
5	LIGHTING	20 A	1			2.13			0.58				6
7	FCV-1311	15 A	3	0.58			0.58			3	15 A	FCV-1315	8
9					0.58			0.58					10
11						0.58			0.58				12
13	FCV-1312	15 A	3	0.58			0.58			3	15 A	FCV-1320	14
15					0.58			0.58					16
17						0.58			0.58				18
19	FCV-1316	15 A	3	0.58			0.58			3	15 A	FCV-1321	20
21					0.58			0.58					22
23						0.58			0.58				24
25	FCV-1323	15 A	3	0.58			0.58			3	15 A	FCV-1318	26
27					0.58			0.58					28
29						0.58			0.58				30
31	FCV-1322	15 A	3	0.58			0.58			3	15 A	FCV-1317	32
33					0.58			0.58					34
35						0.58			0.58				36
37	FCV-1319	15 A	3	0.58			0.58			3	15 A	FCV-1314	38
39					0.58			0.58					40
41						0.58			0.58				42

Panel Totals

	PHASE A	PHASE B	PHASE C
Total Load:	16.71 kVA	16.08 kVA	9.64 kVA
Total Amps:	64 A	62 A	35 A
Total Conn. Load:	42.43 kVA		
Total Design Current:	84 A		

Notes:

Branch Panel: IPCL3

Location: BLOWER SHED --
Supply From: IPCT3
Mounting: Surface
Enclosure: NEMA 3R

Volts: 120/240 Single
Phases: 1
Wires: 3

A.I.C. Rating: 10kA
Panel Rating: 150 A MCB

Notes:

CKT	Load Name	Trip	Poles	A	B	A	B	Poles	Trip	Load Name	CKT
1	RECEPTACLES BLOWER SHED	20 A	1	1.08		1.00		1	20 A	OVERHEAD DOOR	2
3	OVERHEAD DOOR	20 A	1		1.00		1.08	1	20 A	RECEPTACLES BLOWER SHED	4
5	OVERHEAD DOOR	20 A	1	1.00		0.05		1	20 A	FIT-1721	6
7	DAMPER	20 A	1		0.00		0.72	1	20 A	RECEPTACLES	8
9	DAMPER	20 A	1	0.00		0.00		1	20 A	SPARE	10
11	CAMERA	20 A	1		0.10		0.00	1	20 A	SPARE	12
13	TB-BLOW (D)	20 A	1	0.50		0.00		1	20 A	SPARE	14
15	TB-BLOW (D)	20 A	1		0.50		0.00	1	20 A	SPARE	16
17	TB-BLOW (A)	20 A	1	0.50		0.00		1	20 A	SPARE	18
19	CAMERA	20 A	1		0.10		0.00	1	20 A	SPARE	20
21	TB-SBR (A)	20 A	1	0.50		0.00		1	20 A	SPARE	22
23	TB-SBR (D)	20 A	1		0.50		0.00	1	20 A	SPARE	24
25	BLOWER #1	20 A	1	1.50		0.00		1	20 A	SPARE	26
27	BLOWER #2	20 A	1		1.50		0.00	1	20 A	SPARE	28
29	BLOWER #3	20 A	1	1.50		0.00		1	20 A	SPARE	30
31	BLOWER #4	20 A	1		1.50		0.00	1	20 A	SPARE	32
33	BLOWER #5	20 A	1	1.50		0.00		1	20 A	SPARE	34
35	BLOWER #6	20 A	1		1.50		0.00	1	20 A	SPARE	36
37	SPARE	20 A	1	0.00		0.00		1	20 A	SPARE	38
39	SPARE	20 A	1		0.00		0.00	1	20 A	SPARE	40
41	SPARE	20 A	1	0.00		0.00		1	20 A	SPARE	42

Panel Totals

	PHASE A	PHASE B
Total Load:	9.13 kVA	8.50 kVA
Total Amps:	76.08 A	70.83 A
Total Conn. Load:	17.63 kVA	
Total Design Current:	115 A	

Notes:

WALL ENGINEERING
PO BOX 1457, DURANT, OK 74702
OKLAHOMA CA #5413 EXP. JUNE 30, 2023

SUBMITTAL / REVISIONS:

DATE	BY	SUBMITTAL / REVISION
.	.	.

SHAWNEE MUNICIPAL AUTHORITY
WASTEWATER SYSTEM IMPROVEMENTS
SHAWNEE, OKLAHOMA

ELECTRICAL SCHEDULES

PROJECT NO.
SHN–20–01
DATE
06/22
DRAWN BY:
CD
CHECKED BY:
BB
REVIEWED BY:
BB
SCALE:
AS SHOWN

BAR IS ONE INCH ON ORIGINAL DRAWING
0" 1"
IF NOT ONE INCH ON THIS SHEET, ADJUST SCALES ACCORDINGLY

SHEET
EP5

BROWN ENGINEERS
501-448-0100

P:\PRODUCTION\PROJECTS\WALL ENGINEERING (WE)\WE-055 SHAWNEE NORTHSIDE WASTEWATER TREATMENT PLANT\DWG\EP5.DWG
6/1/2022 2:51 PM

Branch Panel:IPCH4

Location:
Supply From: DP1
Mounting: Surface
Enclosure: NEMA 3R

Volts: 480/277 Wye
Phases: 3
Wires: 4

A.I.C. Rating: 100,000
Panel Rating: 400 A MLO

Notes:

CKT	Load Name	Trip	Poles	A	B	C	A	B	C	Poles	Trip	Load Name	CKT
1	IPCT4	35 A	2	2.42			14.40			3	90 A	VFD-1642	2
3					5.03			14.40					4
5	LIGHTING UV ROOM 125	20 A	1			1.95			14.40				6
7	VFD-1641	90 A	3	14.40			0.58			3	15 A	FCV-1611	8
9					14.40			0.58					10
11						14.40			0.58				12
13	UV HSC	20 A	3	0.83			0.58			3	15 A	FCV 1512	14
15					0.83			0.58					16
17						0.83			0.58				18
19	FCV 1511	15 A	3	0.58			15.00			3	100 A	VCP-1531	20
21					0.58			15.00					22
23						0.58			15.00				24
25	EUH-1	20 A	3	2.50			2.50			3	20 A	EUH-3	26
27					2.50			2.50					28
29						2.50			2.50				30
31	EUH-4	20 A	3	2.50			2.50			3	20 A	EUH-6	32
33					2.50			2.50					34
35						2.50			2.50				36
37	SPARE	15 A	3	0.00			0.37			3	15 A	WEF-1	38
39					0.00			0.37					40
41						0.00			0.37				42
43	EUH-5	20 A	3	2.50			2.50			3	20 A	EUH-2	44
45					2.50			2.50					46
47						2.50			2.50				48
49	SPARE	20 A	3	0.00			0.00			3	20 A	HOIST	50
51					0.00			0.00					52
53						0.00			0.00				54

Panel Totals

	PHASE A	PHASE B	PHASE C
Total Load:	64.18 kVA	66.79 kVA	63.61 kVA
Total Amps:	232 A	241 A	230 A
Total Conn. Load:	194.57 kVA		
Total Design Current:	366 A		

Notes:

Branch Panel:IPCH6

Location:
Supply From: DP1
Mounting: Surface
Enclosure: NEMA 3R

Volts: 480/277 Wye
Phases: 3
Wires: 4

A.I.C. Rating: 100,000
Panel Rating: 400 A MLO

Notes:

CKT	Load Name	Trip	Poles	A	B	C	A	B	C	Poles	Trip	Load Name	CKT
1	VCP-1831	20 A	3	4.00			4.00			3	20 A	VCP-1832	2
3					4.00			4.00					4
5						4.00			4.00				6
7	IPC6T	35 A	2	5.00			4.00			3	25 A	FVNR-1845	8
9					2.55			4.00					10
11	LIGHTING BELT FILTER/CHEM ROOM	20 A	1			2.59			4.00				12
13	FCV-1802	15 A	3	0.58			0.58			3	15 A	FCV-1801	14
15					0.58			0.58					16
17						0.58			0.58				18
19	FCV-2212	15 A	3	0.58			0.58			3	15 A	FCV-2215	20
21					0.58			0.58					22
23						0.58			0.58				24
25	FCV-2216	15 A	3	0.58			0.58			3	15 A	FCV-2214	26
27					0.58			0.58					28
29						0.58			0.58				30
31	FCV-2211	15 A	3	0.58			0.58			3	15 A	FCV-2213	32
33					0.58			0.58					34
35						0.58			0.58				36
37	VFD-2242	20 A	3	3.05			3.05			3	20 A	VFD-2241	38
39					3.05			3.05					40
41						3.05			3.05				42
43	WEUH-3	20 A	3	2.50			5.00			3	25 A	WEUH-1	44
45					2.50			5.00					46
47						2.50			5.00				48
49	WEUH-2	25 A	3	5.00			6.00			3	60 A	EWH-1	50
51					5.00			6.00					52
53						5.00			6.00				54

Panel Totals

	PHASE A	PHASE B	PHASE C
Total Load:	46.27 kVA	43.82 kVA	43.74 kVA
Total Amps:	167 A	158 A	158 A
Total Conn. Load:	133.82 kVA		
Total Design Current:	252 A		

Notes:

Branch Panel:IPCL4

Location:
Supply From: IPCT4
Mounting: Surface
Enclosure: NEMA 3R

Volts: 120/240 Single
Phases: 1
Wires: 3

A.I.C. Rating: 10kA
Panel Rating: 80 A MCB

Notes:

CKT	Load Name	Trip	Poles	A	B	A	B	Poles	Trip	Load Name	CKT
1	LS-1561	20 A	1	0.05		0.00		1	20 A	SPARE	2
3	RTU-C	20 A	1		1.50		0.00	1	20 A	SPARE	4
5	UV SCC	20 A	1	1.50		0.00		1	20 A	SPARE	6
7	RECEPTACLES UV ROOM 125	20 A	1		0.72		0.00	1	20 A	SPARE	8
9	RECEPTACLES UV ROOM 125	20 A	1	0.72		0.00		1	20 A	SPARE	10
11	RECEPTACLES UV ROOM 125	20 A	1		0.54		0.00	1	20 A	SPARE	12
13	DAMPER	20 A	1	0.00		0.00		1	20 A	SPARE	14
15	DAMPER	20 A	1		0.00		0.00	1	20 A	SPARE	16
17	FIT-2321a	20 A	1	0.05		0.00		1	20 A	SPARE	18
19	EXTERIOR RECEPTACLES	20 A	1		0.72		0.00	1	20 A	SPARE	20
21	CAMERAS	20 A	1	0.05		0.00		1	20 A	SPARE	22
23	RTU-C	20 A	1		1.50		0.00	1	20 A	SPARE	24
25	CAMERA	20 A	1	0.05		0.00		1	20 A	SPARE	26
27	CAMERA	20 A	1		0.05		0.00	1	20 A	SPARE	28
29	SPARE	20 A	1	0.00		0.00		1	20 A	SPARE	30
31	SPARE	20 A	1		0.00		0.00	1	20 A	SPARE	32
33	SPARE	20 A	1	0.00		0.00		1	20 A	SPARE	34
35	SPARE	20 A	1		0.00		0.00	1	20 A	SPARE	36
37	SPARE	20 A	1	0.00		0.00		1	20 A	SPARE	38
39	SPARE	20 A	1		0.00		0.00	1	20 A	SPARE	40
41	SPARE	20 A	1	0.00		0.00		1	20 A	SPARE	42

Panel Totals

	PHASE A	PHASE B
Total Load:	2.42 kVA	5.03 kVA
Total Amps:	20.17 A	41.92 A
Total Conn. Load:	7.45 kVA	
Total Design Current:	49 A	

Notes:

Branch Panel:IPCL6

Location:
Supply From: IPC6T
Mounting: Surface
Enclosure: NEMA 3R

Volts: 120/240 Single
Phases: 1
Wires: 3

A.I.C. Rating: 10kA
Panel Rating: 80 A MCB

Notes:

CKT	Load Name	Trip	Poles	A	B	A	B	Poles	Trip	Load Name	CKT
1	SIC-2142	20 A	1	0.05		0.05		1	20 A	SIC-2141	2
3	FIT-2222	20 A	1		0.05		0.05	1	20 A	FIT-2221	4
5	RTU-E	20 A	1	1.50		0.00		1	20 A	DAMPER	6
7	RECEPTACLES CHEMICAL ROOM 107	20 A	1		0.54		0.00	1	20 A	DAMPER	8
9	RECEPTACLES BELT FILTER PRESS...	20 A	1	0.72		1.08		1	20 A	EXTERIOR RECEPTACLES	10
11	RECEPTACLES SLUDGE LOADING 106	20 A	1		0.36		0.00	1	20 A	SPARE	12
13	VCP-1031	20 A	1	1.50		0.00		1	20 A	SPARE	14
15	RTU-E	20 A	1		1.50		0.00	1	20 A	SPARE	16
17	CAMERA	20 A	1	0.05		0.00		1	20 A	SPARE	18
19	CAMERA	20 A	1		0.05		0.00	1	20 A	SPARE	20
21	CAMERA	20 A	1	0.05		0.00		1	20 A	SPARE	22
23	TOTE MIXER	20 A	1		0.00		0.00	1	20 A	SPARE	24
25	DRUM MIXER	20 A	1	0.00		0.00		1	20 A	SPARE	26
27	SPARE	20 A	1		0.00		0.00	1	20 A	SPARE	28
29	SPARE	20 A	1	0.00		0.00		1	20 A	SPARE	30
31	SPARE	20 A	1		0.00		0.00	1	20 A	SPARE	32
33	SPARE	20 A	1	0.00		0.00		1	20 A	SPARE	34
35	SPARE	20 A	1		0.00		0.00	1	20 A	SPARE	36
37	SPARE	20 A	1	0.00		0.00		1	20 A	SPARE	38
39	SPARE	20 A	1		0.00		0.00	1	20 A	SPARE	40
41	SPARE	20 A	1	0.00		0.00		1	20 A	SPARE	42

Panel Totals

	PHASE A	PHASE B
Total Load:	5.00 kVA	2.55 kVA
Total Amps:	41.67 A	21.25 A
Total Conn. Load:	7.55 kVA	
Total Design Current:	49 A	

Notes:

WALL ENGINEERING
PO BOX 1457, DURANT, OK 74702
OKLAHOMA CA #5413 EXP. JUNE 30, 2023

SUBMITTAL / REVISIONS:

DATE	BY	SUBMITTAL / REVISION
.	.	.
.	.	.
.	.	.
.	.	.
.	.	.
.	.	.
.	.	.

SHAWNEE MUNICIPAL AUTHORITY
WASTEWATER SYSTEM IMPROVEMENTS
SHAWNEE, OKLAHOMA

ELECTRICAL SCHEDULES

PROJECT NO.
SHN–20–01
DATE
06/22
DRAWN BY:
CD
CHECKED BY:
BB
REVIEWED BY:
BB
SCALE:
AS SHOWN

BAR IS ONE INCH ON ORIGINAL DRAWING
0" 1"
IF NOT ONE INCH ON THIS SHEET, ADJUST SCALES ACCORDINGLY

SHEET
EP6



BROWN ENGINEERS
501-448-0100

P:\PRODUCTION\PROJECTS\WALL ENGINEERING (WE)\WE-055 SHAWNEE NORTHSIDE WASTEWATER TREATMENT PLANT\DWG\EP6.DWG
6/1/2022 2:53 PM

Branch Panel: HP5

Location:
Supply From: DP1
Mounting: Surface
Enclosure: NEMA 3R

Volts: 480/277 Wye
Phases: 3
Wires: 4

A.I.C. Rating: 100,000
Panel Rating: 600 A MLO

Notes:

CKT	Load Name	Trip	Poles	A	B	C	A	B	C	Poles	Trip	Load Name	CKT
1				26.60			26.60						2
3	VFD-2443	125 A	3		26.60			26.60		3	125 A	VFD-2442	4
5						26.60			26.60				6
7				26.60			7.23						8
9	VFD-2441	125 A	3		26.60			7.90		3	100 A	IPCH5	10
11						26.60			7.13				12
13	SPACE	--	1	--			--			1	--	SPACE	14
15	SPACE	--	1		--			--		1	--	SPACE	16
17	SPACE	--	1			--			--	1	--	SPACE	18
19	SPACE	--	1	--			--			1	--	SPACE	20
21	SPACE	--	1		--			--		1	--	SPACE	22
23	SPACE	--	1			--			--	1	--	SPACE	24
25	SPACE	--	1	--			--			1	--	SPACE	26
27	SPACE	--	1		--			--		1	--	SPACE	28
29	SPACE	--	1			--			--	1	--	SPACE	30

Panel Totals

	PHASE A	PHASE B	PHASE C
Total Load:	87.04 kVA	87.71 kVA	86.94 kVA
Total Amps:	314 A	317 A	314 A
Total Conn. Load:	261.69 kVA		
Total Design Current:	492 A		

Notes:

Branch Panel: IPCH5

Location:
Supply From: HP5
Mounting: Surface
Enclosure: NEMA 3R

Volts: 480/277 Wye
Phases: 3
Wires: 4

A.I.C. Rating: 100,000
Panel Rating: 100 A MLO

Notes:

CKT	Load Name	Trip	Poles	A	B	C	A	B	C	Poles	Trip	Load Name	CKT
1	IPC6T	35 A	2	1.60			0.58			3	15 A	FCV-2513	2
3					2.27			0.58					4
5	SITE LIGHTING	20 A	1			1.50			0.58				6
7				0.58			0.58						8
9	FCV-2512	15 A	3		0.58			0.58		3	15 A	FCV-2511	10
11						0.58			0.58				12
13				0.00			3.88						14
15	SPARE	15 A	3		0.00			3.88		3	25 A	BRIDGE CRANE	16
17						0.00			3.88				18
19				0.00			0.00			1	20 A	SPARE	20
21	SPARE	15 A	3		0.00			0.00		1	20 A	SPARE	22
23						0.00			0.00	1	20 A	SPARE	24
25				0.00			0.00			1	20 A	SPARE	26
27	SPARE	15 A	3		0.00			0.00		1	20 A	SPARE	28
29						0.00			0.00	1	20 A	SPARE	30
31	SPARE	20 A	1	0.00			0.00			1	20 A	SPARE	32
33	SPARE	20 A	1		0.00			0.00		1	20 A	SPARE	34
35	SPARE	20 A	1			0.00			0.00	1	20 A	SPARE	36
37	SPARE	20 A	1	0.00			0.00			1	20 A	SPARE	38
39	SPARE	20 A	1		0.00			0.00		1	20 A	SPARE	40
41	SPARE	20 A	1			0.00			0.00	1	20 A	SPARE	42

Panel Totals

	PHASE A	PHASE B	PHASE C
Total Load:	7.23 kVA	7.90 kVA	7.13 kVA
Total Amps:	26 A	29 A	26 A
Total Conn. Load:	22.26 kVA		
Total Design Current:	42 A		

Notes:

Branch Panel: IPCL5

Location:
Supply From: IPC5T
Mounting: Surface
Enclosure: NEMA 3R

Volts: 120/240 Single
Phases: 1
Wires: 3

A.I.C. Rating: 10kA
Panel Rating: 80 A MCB

Notes:

CKT	Load Name	Trip	Poles	A	B	A	B	Poles	Trip	Load Name	CKT
1	LIT-2431A	20 A	1	0.05		0.00		1	20 A	SPARE	2
3	VCP-2431	20 A	1		1.50		0.00	1	20 A	SPARE	4
5	RTU-D	20 A	1	1.50		0.00		1	20 A	SPARE	6
7	RECEPTACLES	20 A	1		0.72		0.00	1	20 A	SPARE	8
9	FIT-2521	20 A	1	0.05		0.00		1	20 A	SPARE	10
11	CAMERA	20 A	1		0.05		0.00	1	20 A	SPARE	12
13	SAMPLER	20 A	1	0.00		0.00		1	20 A	SPARE	14
15	SPARE	20 A	1		0.00		0.00	1	20 A	SPARE	16
17	SPARE	20 A	1	0.00		0.00		1	20 A	SPARE	18
19	SPARE	20 A	1		0.00		0.00	1	20 A	SPARE	20
21	SPARE	20 A	1	0.00		0.00		1	20 A	SPARE	22
23	SPARE	20 A	1		0.00		0.00	1	20 A	SPARE	24
25	SPARE	20 A	1	0.00		0.00		1	20 A	SPARE	26
27	SPARE	20 A	1		0.00		0.00	1	20 A	SPARE	28
29	SPARE	20 A	1	0.00		0.00		1	20 A	SPARE	30
31	SPARE	20 A	1		0.00		0.00	1	20 A	SPARE	32
33	SPARE	20 A	1	0.00		0.00		1	20 A	SPARE	34
35	SPARE	20 A	1		0.00		0.00	1	20 A	SPARE	36
37	SPARE	20 A	1	0.00		0.00		1	20 A	SPARE	38
39	SPARE	20 A	1		0.00		0.00	1	20 A	SPARE	40
41	SPARE	20 A	1	0.00		0.00		1	20 A	SPARE	42

Panel Totals

	PHASE A	PHASE B
Total Load:	1.60 kVA	2.27 kVA
Total Amps:	13.33 A	18.92 A
Total Conn. Load:	3.87 kVA	
Total Design Current:	25 A	

Notes:

WALL ENGINEERING
PO BOX 1457, DURANT, OK 74702
OKLAHOMA CA #5413 EXP. JUNE 30, 2023

SUBMITTAL / REVISIONS:

DATE	BY	SUBMITTAL / REVISION
.	.	.
.	.	.
.	.	.
.	.	.
.	.	.
.	.	.

SHAWNEE MUNICIPAL AUTHORITY
WASTEWATER SYSTEM IMPROVEMENTS
SHAWNEE, OKLAHOMA

ELECTRICAL SCHEDULES

PROJECT NO.
SHN–20–01
DATE
06/22
DRAWN BY:
CD
CHECKED BY:
BB
REVIEWED BY:
BB
SCALE:
AS SHOWN

BAR IS ONE INCH ON ORIGINAL DRAWING
0" 1"
IF NOT ONE INCH ON THIS SHEET, ADJUST SCALES ACCORDINGLY

SHEET
EP7



BROWN ENGINEERS
501-448-0100

P:\PRODUCTION\PROJECTS\WALL ENGINEERING (WE)\WE-055 SHAWNEE NORTHSIDE WASTEWATER TREATMENT PLANT\DWG\EP7.DWG
6/1/2022 2:57 PM

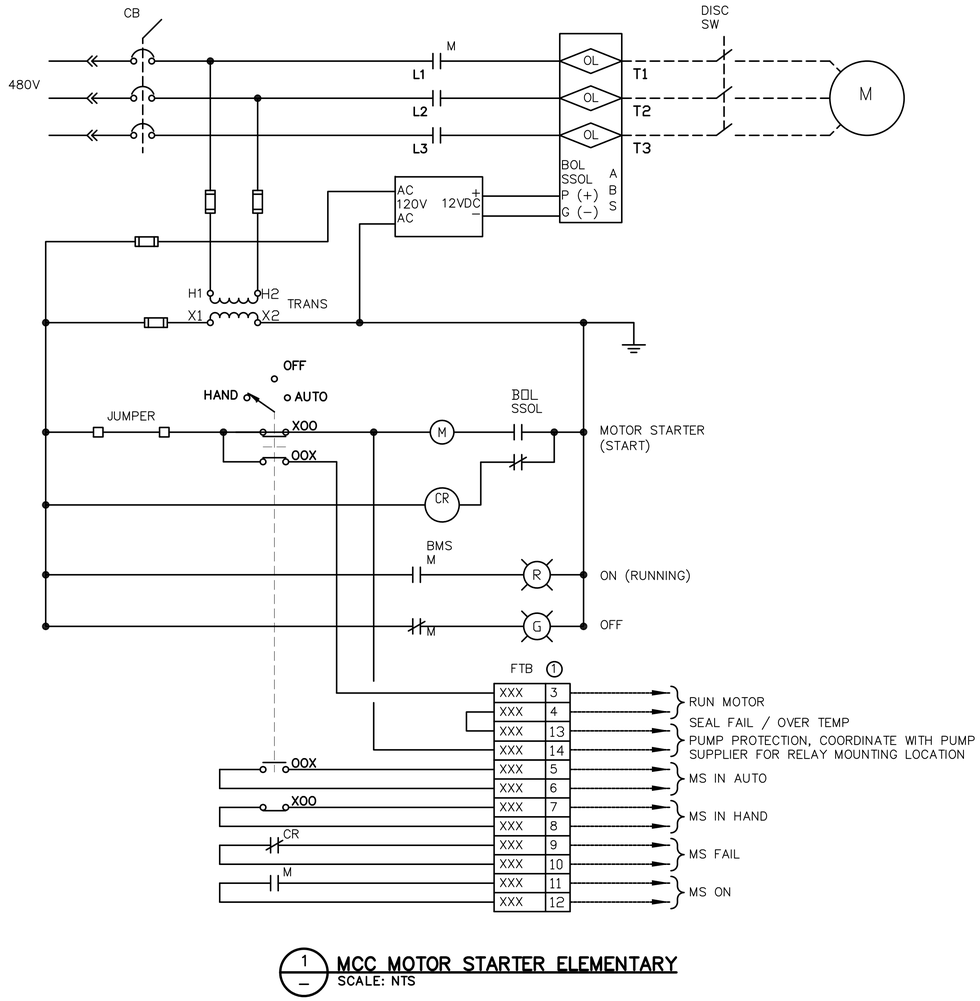

1 MCC MOTOR STARTER ELEMENTARY
SCALE: NTS

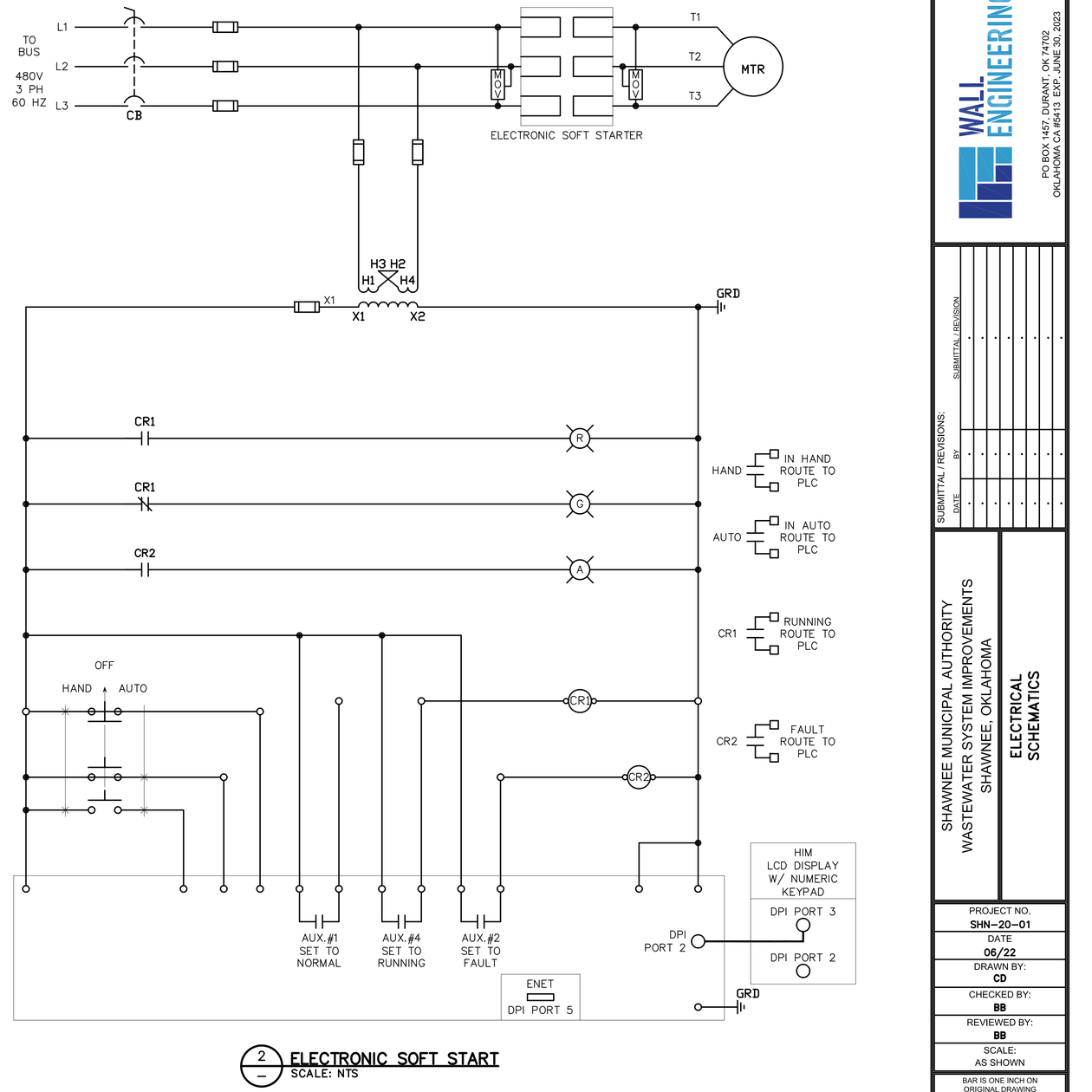

2 ELECTRONIC SOFT START
SCALE: NTS

WALL ENGINEERING
PO BOX 1457, DURANT, OK 74702
OKLAHOMA CA #5413 EXP. JUNE 30, 2023

SUBMITTAL / REVISIONS:

	SUBMITTAL / REVISION	BY	DATE

SHAWNEE MUNICIPAL AUTHORITY
WASTEWATER SYSTEM IMPROVEMENTS
SHAWNEE, OKLAHOMA

ELECTRICAL SCHEMATICS

PROJECT NO.
SHN–20–01
DATE
06/22
DRAWN BY:
CD
CHECKED BY:
BB
REVIEWED BY:
BB
SCALE:
AS SHOWN

BAR IS ONE INCH ON ORIGINAL DRAWING
0" 1"
IF NOT ONE INCH ON THIS SHEET, ADJUST SCALES ACCORDINGLY

SHEET
EQ1

BROWN ENGINEERS
501-448-0100

P:\PRODUCTION\PROJECTS\WALL ENGINEERING (WE)\WE-055 SHAWNEE NORTHSIDE WASTEWATER TREATMENT PLANT\DWG\EQ1.DWG
6/2/2022 3:47 PM

460VAC
FROM POWER SUPPLY
(A1) (A2)
(B1) (B2)
(C1) (C2)
5% LINE REACTOR
CB
L1
L2
L3
GND
AFC/DRIVE
U/T1
V/T2
W/T3
T1
T2
T3
460VAC
MOTOR
MOTOR GROUND PER CODE
GND
GND
FU2
FU3
(H1) (H3) 460V (H2) (H4)
XFMR 100VA
FU1 (X1) 115V (X2)
GND
POWER ON
R
X1 X2
POWER ON
SAFETY SWITCH
INHIBIT
START INTERLOCK
1 2
TB1
HAND OFF AUTO
13 14
RCR
A1 A2
RUN COMMAND RELAY
CONTROL PANEL
SCADA
STT/STP
OVERTEMP
SEAL FAIL
HAND
IN HAND ROUTE TO PLC
AUTO
IN AUTO ROUTE TO PLC
AFC
R1C R1A
(R1 & R2 LOCATED IN AFC)
ADTR
AUX DRIVE TRIP RELAY
AFC
R2C R2A
(R1 & R2 LOCATED IN AFC)
ADRR
AUX DRIVE RUN RELAY
AFC RUN
AFC RUN
ADRR
VFD RUNNING ROUTE TO CP-1
ADTR
21 22
TRIPPED
AFC TRIPPED
ADTR
VFD TRIPPED ROUTE TO CO-1
FAN1
1 2
FAN1
RCR
21 24
P24
0V
DI1
RUN FORWARD
HAND OFF AUTO
21 22
DI2
DI3
REFERENCE SWITCHING
11 12
DI4
RESET
DI5
DI6
24V
10V
AI1
COM
AI2
AI3
POT
2.5K OHMS
SPEED ADJ.
POTENTIOMETER
CCW
EXTERNAL SPEED REFERENCE
R1A
R1C
R1B
TRIP
R2A
R2C
RUN
R3A
R3C
PROGRAMMABLE
STOA
STOB
24V
COM
AQ1
AQ2
OUTPUT SPEED
4-20mA
PILOT DEVICE DETAIL
PWR ON TRIPPED AFC RUN
R Y G
HOA POT
AFC/DRIVE
MODBUS VP12S
KEYPAD/
KEYPAD HOLDER

VFD SCHEMATIC
SCALE: NONE

P:\PRODUCTION\PROJECTS\WALL ENGINEERING (WE)\WE-055 SHAWNEE NORTHSIDE WASTEWATER TREATMENT PLANT\DWG\EQ2.DWG
5/20/2022 1:26 PM

WALL ENGINEERING
PO BOX 1457, DURANT, OK 74702
OKLAHOMA CA #5413 EXP. JUNE 30, 2023

SUBMITTAL / REVISIONS:
DATE | BY | SUBMITTAL / REVISION

SHAWNEE MUNICIPAL AUTHORITY
WASTEWATER SYSTEM IMPROVEMENTS
SHAWNEE, OKLAHOMA

ELECTRICAL SCHEMATICS

PROJECT NO.
SHN-20-01
DATE
06/22
DRAWN BY:
CD
CHECKED BY:
BB
REVIEWED BY:
BB
SCALE:
AS SHOWN

BAR IS ONE INCH ON ORIGINAL DRAWING
0" 1"
IF NOT ONE INCH ON THIS SHEET, ADJUST SCALES ACCORDINGLY

SHEET
EQ2

REGISTERED PROFESSIONAL ENGINEER
BRUCE BROWN
20995
OKLAHOMA
6-01-2022

BROWN ENGINEERS
501-448-0100

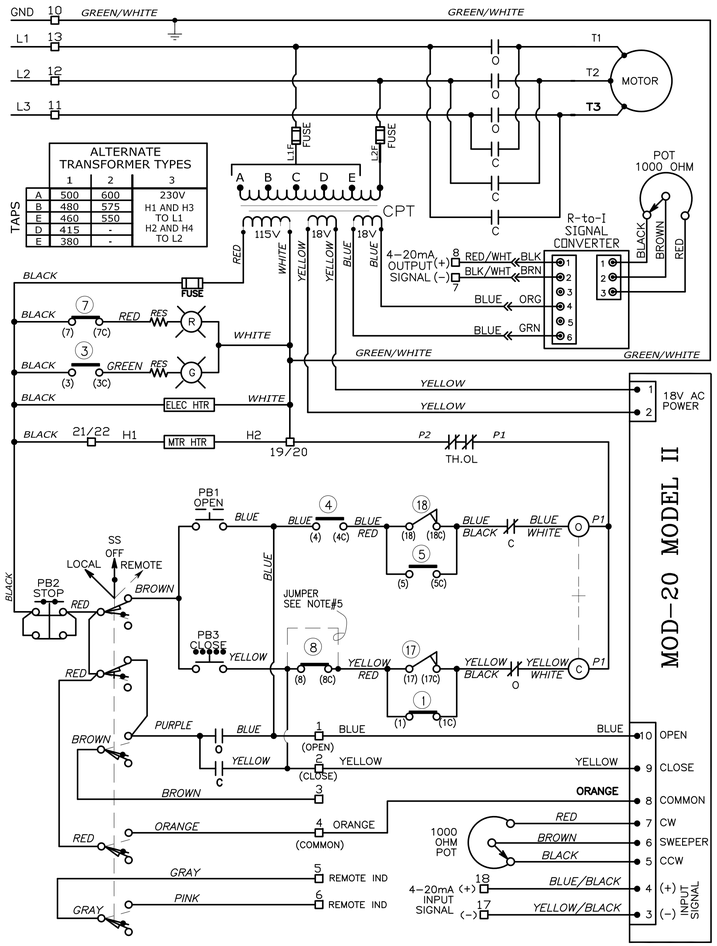

VALVE SHOWN IN FULL OPEN POSITION

ROTOR	CONTACT	LIMIT SWITCH CONTACT DEVELOPMENT VALVE POSITION: FULLY OPEN / A / B / FULLY CLOSED	FUNCTION
OPEN	1		BY-PASS CIR.
	2		SPARE
	3		IND LIGHT
	4		OPEN LIMIT
CLOSE	5		BY-PASS CIR
	6		SPARE
	7		IND LIGHT
	8		CLOSE LIMIT
INT.1	9		SPARE
	10		SPARE
	11		SPARE
	12		SPARE
INT.2	13		SPARE
	14		SPARE
	15		SPARE
	16		SPARE

(17) CLOSING TORQUE SWITCH INTERRUPTS CONTROL CIRCUIT IF MECHANICAL OVERLOAD OCCURS DURING CLOSING CYCLE

(18) OPENING TORQUE SWITCH INTERRUPTS CONTROL CIRCUIT IF MECHANICAL OVERLOAD OCCURS DURING OPENING CYCLE

NOTES

1. - - - OPEN CONTACT
2. ▬▬ CLOSE CONTACT
3. SEE CERTIFICATION SHEET FOR VOLTAGE SUPPLIED. TRANSFORMER UNUSED WIRED TO BE SEPARATELY COVERED WITH INSULATING HEAT SHRINK TUBING.
4. ROTORS INT.1 & INT.2 CAN BE SET AT VALVE POSITION FULL OPEN, FULL CLOSED OR ANY POSITION IN BETWEEN AS INDICATED BY POINTS A AND B.
5. ADD JUMPER ON LS#8 BETWEEN TERMINALS (8) & (8C) FOR TORQUE SEATING VALVES

LEGEND

O-OPEN CONTACT
C-CLOSE CONTACT
Ⓞ-OPENING COIL
Ⓒ-CLOSING COIL
CPT-CONTROL POWER TRANSFORMER
+-MECHANICAL INTERLOCK
TH.OL-THERMAL OVERLOAD CONTACTS
Ⓡ-RED INDICATING LIGHT
Ⓖ-GREEN INDICATING LIGHT
SS-SELECTOR SWITCH (LOCAL-OFF-REMOTE)
PB1-OPEN PUSHBUTTON
PB2-STOP PUSHBUTTON
PB3-CLOSE PUSHBUTTON
ELEC HTR-COMPARTMENT HEATER
MTR HTR-MOTOR HEATER
POT-POTENTIOMETER
RES-LAMP RESISTORS

1 VALVE ACTUATOR SCHEMATIC
SCALE: NONE

CRITICAL NOTE:

SUBMIT CONTROL SCHEMATICS OF VALVE OPERATOR INDICATING FORCED CLOSURE OF 2 INFLUENT GATES AT HEADWORKS UPON LOSS OF 480 VOLT POWER MEASURED AT PANEL HP2.

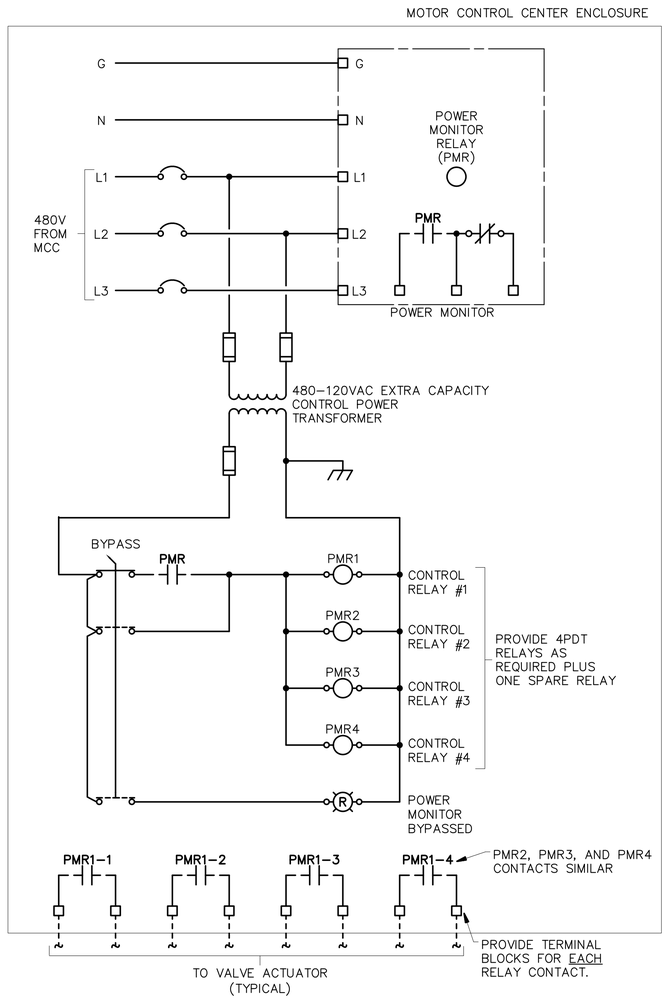

2 POWER MONITOR SCHEMATIC
SCALE: NONE

WALL ENGINEERING
PO BOX 1457, DURANT, OK 74702
OKLAHOMA CA #5413 EXP. JUNE 30, 2023

SUBMITTAL / REVISIONS:

DATE	BY	SUBMITTAL / REVISION

SHAWNEE MUNICIPAL AUTHORITY
WASTEWATER SYSTEM IMPROVEMENTS
SHAWNEE, OKLAHOMA

ELECTRICAL SCHEMATICS

PROJECT NO.	SHN-20-01
DATE	06/22
DRAWN BY:	CD
CHECKED BY:	BB
REVIEWED BY:	BB
SCALE:	AS SHOWN

BAR IS ONE INCH ON ORIGINAL DRAWING
0" 1"
IF NOT ONE INCH ON THIS SHEET, ADJUST SCALES ACCORDINGLY

SHEET

EQ3



BROWN ENGINEERS
501-448-0100

P:\PRODUCTION\PROJECTS\WALL ENGINEERING (WE)\WE-055 SHAWNEE NORTHSIDE WASTEWATER TREATMENT PLANT\DWG\EQ3.DWG
6/2/2022 3:55 PM

NOTE:

INSTALLING CAMERA CONTRACTOR SHALL BE A MANUFACTURER CERTIFIED INSTALLER. BOSCH DIVAR IP AIO TECHNICAL CERTIFICATION

CABLE LEGEND:

- FO* (12STRAND FIBER OPTIC)2"C
- ECAM (CAT 5e)3/4"C
- FCAM (4 STRAND FIBER)1"C
- PCAM (CAMERA DC POWER)3/4"C
- ENET (CAT 5e)3/4"C

Television Equipment			
Quantity	**Description**	**Manufacturer**	**Model No.**
13	PTZ Camera	Bosch	MIC-7502-Z30W
13	Wall Bracket	Bosch	MIC-WMB-WD
13	Adapter	Bosch	MIC-M25XNPT34
13	Adapter	Bosch	MIC-SCA-WD
13	Pole Bracket	Bosch	MIC-PMB
13	Power Supply	Bosch	VG4-A-PSU1
13	Fiber Module	Bosch	SFP-25
13	Fiber Module	Bosch	SFP-26
13	Ethernet to SFP Interface	Bosch	VG4-SFPSCKT
13	Media Converter	Bosch	CNFE2MC/IN
1	NVR	Bosch	DIP-5244GP-4HD
1	NVR Expansion	Bosch	MBV-BLIT-DIP
1	Maintenance	Bosch	MBV-MLIT-DIP

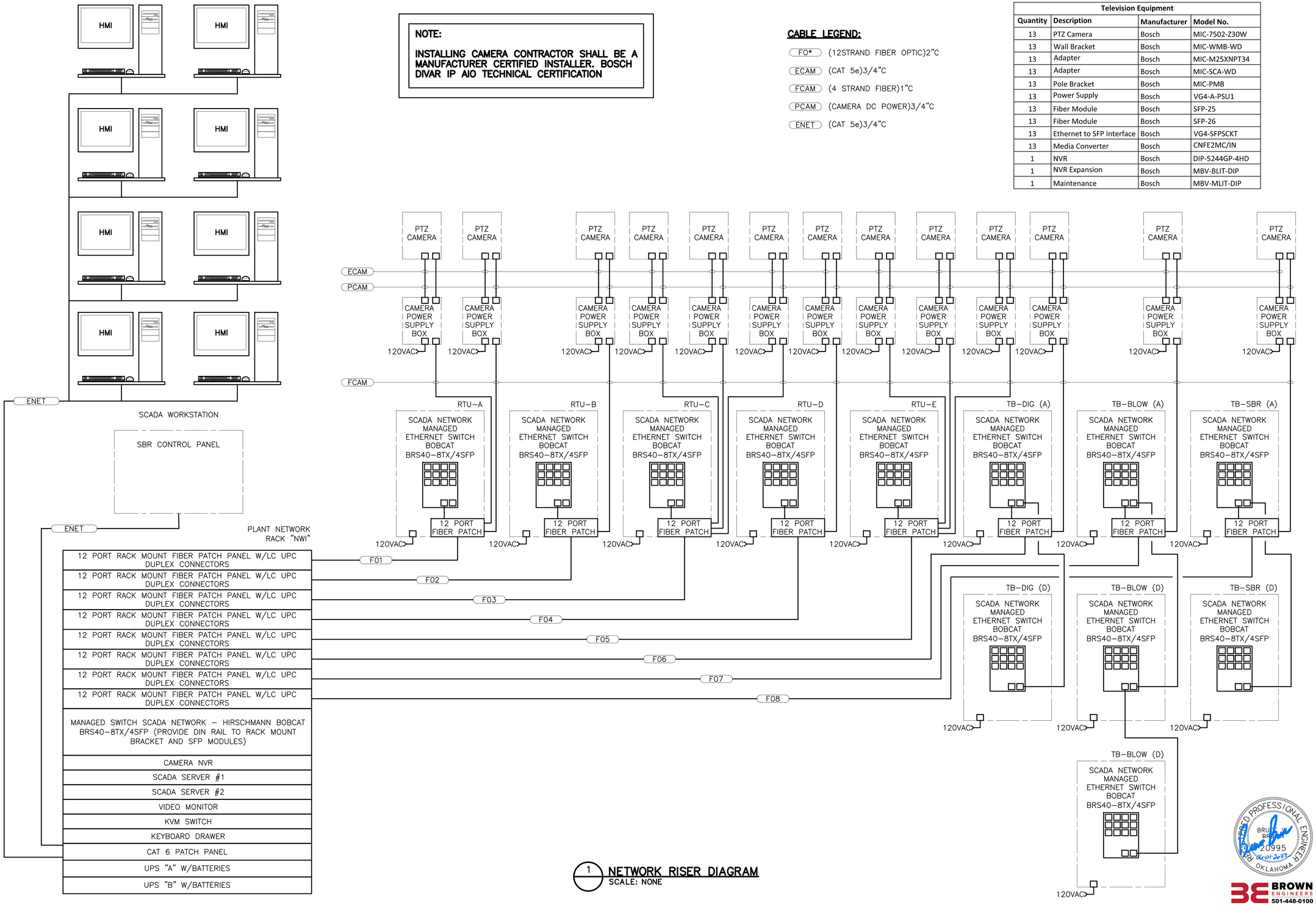

1 **NETWORK RISER DIAGRAM**
SCALE: NONE

WALL ENGINEERING
PO BOX 1457, DURANT, OK 74702
OKLAHOMA CA #5413 EXP. JUNE 30, 2023

SUBMITTAL / REVISIONS:

DATE	BY	SUBMITTAL / REVISION

SHAWNEE MUNICIPAL AUTHORITY
WASTEWATER SYSTEM IMPROVEMENTS
SHAWNEE, OKLAHOMA

ELECTRICAL NETWORK RISER DIAGRAM

PROJECT NO.	SHN-20-01
DATE	06/22
DRAWN BY:	CD
CHECKED BY:	BB
REVIEWED BY:	BB
SCALE:	AS SHOWN

BAR IS ONE INCH ON ORIGINAL DRAWING
0" 1"
IF NOT ONE INCH ON THIS SHEET, ADJUST SCALES ACCORDINGLY

SHEET

ER1

BROWN ENGINEERS
501-448-0100

P:\PRODUCTION\PROJECTS\WALL ENGINEERING (WE)\WE-055 SHAWNEE NORTHSIDE WASTEWATER TREATMENT PLANT\DWG\ER1.DWG
6/2/2022 3:56 PM

CABLE SCHEDULE

EQTP	EQNO	VOLTAGE_RATING	AMP_POLE	LOAD/CIRCUIT	PWR_ROUTE_TO	ENCLOSURE_RATING	DESCRIPTION_1	DIGITAL_CABLE	ANALOG_CABLE	I&C_ROUTE_TO
CB	0000	480VAC-3P	20A/3P	F20	HP-1	–	–	–	–	–
UY	0000	480VAC-3P	20A/3P	F20	CB-0000	–	POWER MONITOR	2#14/THWN/1C	–	RTU-A
GEN	101	480VAC-3P	–	–	–	–	–	6#14/THWN/1C	–	RTU-E
CB	1011	480VAC-3P	15A/3P	1HP/F20	IPC-2	–	–	–	–	–
FCV	1011	480VAC-3P	15A/3P	1HP/F20	CB-1011	–	–	6#14/THWN/1C	2-1ISP16/P-OS/1C	TB-1031
CB	1012	480VAC-3P	15A/3P	1HP/F20	IPC-2	–	–	–	–	–
FCV	1012	480VAC-3P	15A/3P	1HP/F20	CB-1012	–	–	6#14/THWN/1C	2-1ISP16/P-OS/1C	TB-1031
CB	1013	480VAC-3P	15A/3P	1HP/F20	IPC-2	–	–	–	–	–
FCV	1013	480VAC-3P	15A/3P	1HP/F20	CB-1013	–	–	6#14/THWN/1C	2-1ISP16/P-OS/1C	TB-1031
CB	1014	480VAC-3P	15A/3P	1HP/F20	IPC-2	–	–	–	–	–
FCV	1014	480VAC-3P	15A/3P	1HP/F20	CB-1014	–	–	6#14/THWN/1C	2-1ISP16/P-OS/1C	TB-1031
CB	1015	480VAC-3P	15A/3P	1HP/F20	IPC-2	–	–	–	–	–
FCV	1015	480VAC-3P	15A/3P	1HP/F20	CB-1015	–	–	6#14/THWN/1C	2-1ISP16/P-OS/1C	TB-1031
CB	1016	480VAC-3P	15A/3P	1HP/F20	IPC-2	–	–	–	–	–
FCV	1016	480VAC-3P	15A/3P	1HP/F20	CB-1016	–	–	6#14/THWN/1C	2-1ISP16/P-OS/1C	TB-1031
CB	1017	480VAC-3P	15A/3P	1HP/F20	IPC-2	–	–	–	–	–
FCV	1017	480VAC-3P	15A/3P	1HP/F20	CB-1017	–	–	6#14/THWN/1C	2-1ISP16/P-OS/1C	TB-1031
CB	1018	480VAC-3P	15A/3P	1HP/F20	IPC-2	–	–	–	–	–
FCV	1018	480VAC-3P	15A/3P	1HP/F20	CB-1018	–	–	6#14/THWN/1C	2-1ISP16/P-OS/1C	TB-1031
CB	1019	480VAC-3P	15A/3P	1HP/F20	IPC-2	–	–	–	–	–
FCV	1019	480VAC-3P	15A/3P	1HP/F20	CB-1019	–	–	6#14/THWN/1C	2-1ISP16/P-OS/1C	TB-1031
ATS	102	480VAC-3P	–	–	–	–	–	6#14/THWN/1C	–	RTU-E
REFER TO TB	1031	–	–	–	–	–	–	–	–	–
REFER TO TB	1031	–	–	–	–	–	–	–	–	–
REFER TO VCP	1031	–	–	–	–	–	–	–	–	–
VCP	1031	120VAC-1P	–	1.5KVA/1F20N	CB-1031	–	–	–	–	–
TB	1031 SBR (A)	–	–	–	–	–	–	–	F08	NETWORK NW1
TB	1031 SBR (A)	120VAC-1P	20A/1P	50VA/1F20N	CB-1031(A)	NEMA 4X	–	–	50ISP16/SP-OS/4C	VCP-1031
TB	1031 SBR (D)	120VAC-1P	20A/1P	50VA/1F20N	CB-1031(D)	NEMA 4X	–	50PR#14/P-OS/4C	–	VCP-1031
CB	1031(A)	120VAC-1P	20A/1P	1.5KVA/1F20N	IPC-3	–	–	–	–	–
CB	1031(D)	120VAC-1P	20A/1P	1.5KVA/1F20N	IPC-3	–	–	–	–	–
CB	1041	480VAC-3P	125A/3P	75HP/F125	HP-2	–	–	–	–	–
FVNR	1041	480VAC-3P	NEMA SIZE 4	75HP/F125	CB-1041	NEMA 4X	–	6#14/THWN/1C	–	TB-1031
MTR	1041	480VAC-3P	–	75HP/VENDOR CABLE	FVNR-1041	–	–	–	–	–
CB	1042	480VAC-3P	125A/3P	75HP/F125	HP-2	–	–	–	–	–
FVNR	1042	480VAC-3P	NEMA SIZE 4	75HP/F125	CB-1042	NEMA 4X	–	6#14/THWN/1C	–	TB-1031
MS	1042	–	–	–	–	–			1ISP16/P-OS/1C	TB-1031
MS	1042	–	–	–	–	–			1ISP16/P-OS/1C	TB-1031
MTR	1042	480VAC-3P	–	75HP/VENDOR CABLE	FVNR-1042	–	–	–	–	–
TS	1042	–	–	–	–	–			1ISP16/P-OS/1C	TB-1031
TS	1042	–	–	–	–	–			1ISP16/P-OS/1C	TB-1031
CB	1043	480VAC-3P	125A/3P	75HP/F125	HP-2	–	–	–	–	–
FVNR	1043	480VAC-3P	NEMA SIZE 4	75HP/F125	CB-1043	NEMA 4X	–	6#14/THWN/1C	–	TB-1031
MS	1043	–	–	–	–	–			1ISP16/P-OS/1C	TB-1031
MTR	1043	480VAC-3P	–	75HP/VENDOR CABLE	FVNR-1043	–	–	–	–	–
TS	1043	–	–	–	–	–			1ISP16/P-OS/1C	TB-1031
LS	1061	–	–	–	–	–	HI LEVEL	2#14/THWN/1C	–	TB-1031
LS	1062	–	–	–	–	–	HI LEVEL	2#14/THWN/1C	–	TB-1031
LS	1063	–	–	–	–	–	HI LEVEL	2#14/THWN/1C	–	TB-1031
CB	1071	120VAC-1P	20A/1P	1.5KVA/1F20N	IPC-2	–	–	–	–	–
LIT	1071	120VAC-1P	20A/1P	50VA/1F20N	CB-1071	–	–	–	1ISP16/P-OS/1C	TB-1031
CB	1072	120VAC-1P	20A/1P	1.5KVA/1F20N	IPC-2	–	–	–	–	–
LIT	1072	120VAC-1P	20A/1P	50VA/1F20N	CB-1072	–	–	–	1ISP16/P-OS/1C	TB-1031
CB	1073	120VAC-1P	20A/1P	50VA/1F20N	IPC-2	–	–	–	–	–
LIT	1073	120VAC-1P	20A/1P	50VA/1F20N	CB-1073	–	–	–	1ISP16/P-OS/1C	TB-1031
AIT	1081	120VAC-1P	20A/1P	50VA/1F20N	CB-1081	–	DO	–	1ISP16/P-OS/1C	TB-1031
CB	1081	120VAC-1P	20A/1P	1.5KVA/1F20N	IPC-2	–	–	–	–	–
AIT	1082	120VAC-1P	20A/1P	50VA/1F20N	CB-1082	–	TSS	–	1ISP16/P-OS/1C	TB-1031
CB	1082	120VAC-1P	20A/1P	1.5KVA/1F20N	IPC-2	–	–	–	–	–
AIT	1083	120VAC-1P	20A/1P	50VA/1F20N	CB-1083	–	DO	–	1ISP16/P-OS/1C	TB-1031

CABLE SCHEDULE NOTES:

1. INSTRUMENT DEVICE SCHEDULE SHOWN ABOVE SPECIFIES THE REQUIRED CIRCUITS AND CIRCUIT ROUTING FOR EACH DEVICE.
2. FURNISH AND INSTALL ANALOG CABLING FROM LOCATION INDICATED IN COLUMN "ANALOG_CABLE" TO LOCATION SHOWN IN COLUMN "I&C_ROUTE_TO".
3. FURNISH AND INSTALL DIGITAL CABLING FROM LOCATION INDICATED IN COLUMN "DIGITAL_CABLE" TO LOCATION SHOWN IN COLUMN "I&C_ROUTE_TO".
4. FURNISH AND INSTALL POWER CABLING FROM DEVICE TO LOCATION SHOWN IN COLUMN "PWR_ROUTE_TO".
5. SIZE POWER CIRCUIT AS REQUIRED OR AS INDICATED IN COLUMN "LOAD/CIRCUIT".
6. REFER TO PLAN SHEETS FOR OTHER CIRCUIT REQUIREMENTS.
7. SUBSCRIPT "a" ON PLAN SHEET CABLE CALL OUT INDICATES THE ANALOG CIRCUIT.
8. SUBSCRIPT "d" ON PLAN SHEET CABLE CALL OUT INDICATES THE DIGITAL CIRCUIT.
9. SUBSCRIPT "p" ON PLAN SHEET CABLE CALL OUT INDICATES THE POWER CIRCUIT.
10. CABLE TYPE "ISP16/P-OS" IS DEFINED AS EQUAL TO OKONITE OKOSEAL-N TYPE P-OS, TC, 600V, 16 AWG, SINGLE PAIR INSTRUMENTATION CABLE WITH OVERALL SHIELD.
11. CABLE TYPE "**-ISP16/SP-OS" IS DEFINED AS EQUAL TO OKONITE OKOSEAL-N TYPE SP-OS, TC, 600V, 16 AWG, **PAIRS, MULTIPLE SHIELDED PAIR INSTRUMENTATION CABLE WITH OVERALL SHIELD.
12. CABLE TYPE "**PR#14/P-OS" IS DEFINED AS EQUAL TO OKONITE OKOSEAL-N TYPE P-OS, TC, 600V, 14 AWG, **PAIRS, MULTIPLE SHIELDED PAIR INSTRUMENTATION CABLE WITH OVERALL SHIELD.
13. CABLE TYPE "THWN" IS DEFINED AS INDIVIDUAL #14 AWG THWN CONDUCTORS.

WALL ENGINEERING
PO BOX 1457, DURANT, OK 74702
OKLAHOMA CA #5413 EXP. JUNE 30, 2023

SUBMITTAL / REVISIONS:

DATE	BY	SUBMITTAL / REVISION
.	.	.

SHAWNEE MUNICIPAL AUTHORITY
WASTEWATER SYSTEM IMPROVEMENTS
SHAWNEE, OKLAHOMA

ELECTRICAL CABLE SCHEDULE

PROJECT NO.
SHN-20-01
DATE
06/22
DRAWN BY:
CD
CHECKED BY:
BB
REVIEWED BY:
BB
SCALE:
AS SHOWN

BAR IS ONE INCH ON ORIGINAL DRAWING
0" 1"
IF NOT ONE INCH ON THIS SHEET, ADJUST SCALES ACCORDINGLY

SHEET
ES1



BROWN ENGINEERS
501-448-0100

P:\PRODUCTION\PROJECTS\WALL ENGINEERING (WE)\WE-055 SHAWNEE NORTHSIDE WASTEWATER TREATMENT PLANT\DWG\ES1.DWG
5/20/2022 1:29 PM

CABLE SCHEDULE

EQTP	EQNO	VOLTAGE_RATING	AMP_POLE	LOAD/CIRCUIT	PWR_ROUTE_TO	ENCLOSURE_RATING	DESCRIPTION_1	DIGITAL_CABLE	ANALOG_CABLE	I&C_ROUTE_TO
CB	1083	120VAC-1P	20A/1P	1.5KVA/1F20N	IPC-2	–	–	–	–	–
AIT	1084	120VAC-1P	20A/1P	50VA/1F20N	CB-1084	–	TSS	–	1ISP16/P-OS/1C	TB-1031
CB	1084	120VAC-1P	20A/1P	1.5KVA/1F20N	IPC-2	–	–	–	–	–
AIT	1085	120VAC-1P	20A/1P	50VA/1F20N	CB-1085	–	DO	–	1ISP16/P-OS/1C	TB-1031
CB	1085	120VAC-1P	20A/1P	50VA/1F20N	IPC-2	–	–	–	–	–
AIT	1086	120VAC-1P	20A/1P	50VA/1F20N	CB-1086	–	TSS	–	1ISP16/P-OS/1C	TB-1031
CB	1086	120VAC-1P	20A/1P	50VA/1F20N	IPC-2	–	–	–	–	–
CB	1101	480VAC-3P	15A/3P	1HP/F20	IPC-2	–	–	–	–	–
FCV	1101	480VAC-3P	15A/3P	1HP/F20	CB-1101	–	–	6#14/THWN/1C	2-1ISP16/P-OS/1C	TB-DIG
CB	1102	480VAC-3P	15A/3P	1HP/F20	IPC-2	–	–	–	–	–
FCV	1102	480VAC-3P	15A/3P	1HP/F20	CB-1102	–	–	6#14/THWN/1C	2-1ISP16/P-OS/1C	TB-DIG
CB	1103	480VAC-3P	15A/3P	1HP/F20	IPC-2	–	–	–	–	–
FCV	1103	480VAC-3P	15A/3P	1HP/F20	CB-1103	–	–	6#14/THWN/1C	2-1ISP16/P-OS/1C	TB-DIG
CB	1104	480VAC-3P	15A/3P	1HP/F20	IPC-2	–	–	–	–	–
FCV	1104	480VAC-3P	15A/3P	1HP/F20	CB-1104	–	–	6#14/THWN/1C	2-1ISP16/P-OS/1C	TB-DIG
CB	1111	480VAC-3P	15A/3P	1HP/F20	IPC-1	–	–	–	–	–
FCV	1111	480VAC-3P	15A/3P	1HP/F20	CB-1111	–	–	10#14/THWN/1C	2-1ISP16/P-OS/1C	RTU-A
CB	1112	480VAC-3P	15A/3P	1HP/F20	IPC-1	–	–	–	–	–
FCV	1112	480VAC-3P	15A/3P	1HP/F20	CB-1112	–	–	6#14/THWN/1C	2-1ISP16/P-OS/1C	RTU-A
CB	1131	480VAC-3P	30A/3P	10HP/F30	IPC-1	–	–	–	–	–
LS	1131	–	–	–	–	–	HIGH LEVEL	3#14/THWN/1C	–	VCP-1131
VCP	1131	480VAC-3P	–	10HP/F30	CB-1131	NEMA 4X	–	20#14/THWN/1C	–	RTU-A
FV	1131a	120VA-1P	–	–	–	–	SCREW SPRAY	3#14/THWN/1C	–	VCP-1131
HS	1131a	120VA-1P	–	–	–	–	E-STOP	2#14/THWN/1C	–	VCP-1131
HTR	1131a	120VA-1P	–	.5KVA/1F20N	VCP-1131	–	–	–	–	–
MTR	1131a	480VA-3P	–	2HP/F20	VCP-1131	–	–	–	–	–
TS	1131a	–	–	–	–	–	MTR TEMP	2#14/THWN/1C	–	VCP-1131
FV	1131b	120VA-1P	–	–	–	–	PRESS SPRAY	3#14/THWN/1C	–	VCP-1131
HS	1131b	120VA-1P	–	–	–	–	E-STOP	2#14/THWN/1C	–	VCP-1131
HTR	1131b	120VA-1P	–	.5KVA/1F20N	VCP-1131	–	–	–	–	–
MTR	1131b	480VA-3P	–	1.5HP/F20	VCP-1131	–	–	–	–	–
TS	1131b	–	–	–	–	–	AMB TEMP	2#14/THWN/1C	–	VCP-1131
FV	1131c	120VA-1P	–	–	–	–	PRESS FLUSH	3#14/THWN/1C	–	VCP-1131
MTR	1131c	480VA-3P	–	3HP/F20	VCP-1131	–	–	–	–	–
TS	1131c	–	–	–	–	–	MTR TEMP	2#14/THWN/1C	–	VCP-1131
TS	1131d	–	–	–	–	–	MTR TEMP	2#14/THWN/1C	–	VCP-1131
AIT	1181	120VAC-1P	20A/1P	50VA/1F20N	CB-1181	–	TEMP	–	1ISP16/P-OS/1C	TB-DIG
CB	1181	120VAC-1P	20A/1P	50VA/1F20N	IPC-2	–	–	–	–	–
AIT	1182	120VAC-1P	20A/1P	50VA/1F20N	CB-1182	–	DO	–	1ISP16/P-OS/1C	TB-DIG
CB	1182	120VAC-1P	20A/1P	50VA/1F20N	IPC-2	–	–	–	–	–
AIT	1183	120VAC-1P	20A/1P	50VA/1F20N	CB-1183	–	TEMP	–	1ISP16/P-OS/1C	TB-DIG
CB	1183	120VAC-1P	20A/1P	50VA/1F20N	IPC-2	–	–	–	–	–
AIT	1184	120VAC-1P	20A/1P	50VA/1F20N	CB-1184	–	DO	–	1ISP16/P-OS/1C	TB-DIG
CB	1184	120VAC-1P	20A/1P	50VA/1F20N	IPC-2	–	–	–	–	–
CB	1211	480VAC-3P	15A/3P	1HP/F20	IPC-1	–	–	–	–	–
FCV	1211	480VAC-3P	15A/3P	1HP/F20	CB-1211	–	–	10#14/THWN/1C	2-1ISP16/P-OS/1C	RTU-A
CB	1212	480VAC-3P	15A/3P	1HP/F20	IPC-1	–	–	–	–	–
FCV	1212	480VAC-3P	15A/3P	1HP/F20	CB-1212	–	–	6#14/THWN/1C	2-1ISP16/P-OS/1C	RTU-A
CB	1231	480VAC-3P	30A/3P	10HP/F30	IPC-1	–	–	–	–	–
LS	1231	–	–	–	–	–	HIGH LEVEL	3#14/THWN/1C	–	VCP-1231
VCP	1231	480VAC-3P	–	10HP/F30	CB-1231	NEMA 4X	–	20#14/THWN/1C	–	RTU-A
FV	1231a	120VA-1P	–	–	–	–	SCREW SPRAY	3#14/THWN/1C	–	VCP-1231
HS	1231a	120VA-1P	–	–	–	–	E-STOP	2#14/THWN/1C	–	VCP-1231
HTR	1231a	120VA-1P	–	.5KVA/1F20N	VCP-1231	–	–	–	–	–
MTR	1231a	480VA-3P	–	2HP/F20	VCP-1231	–	–	–	–	–
TS	1231a	–	–	–	–	–	MTR TEMP	2#14/THWN/1C	–	VCP-1231
FV	1231b	120VA-1P	–	–	–	–	PRESS SPRAY	3#14/THWN/1C	–	VCP-1231
HS	1231b	120VA-1P	–	–	–	–	E-STOP	2#14/THWN/1C	–	VCP-1231
HTR	1231b	120VA-1P	–	.5KVA/1F20N	VCP-1231	–	–	–	–	–
MTR	1231b	480VA-3P	–	1.5HP/F20	VCP-1231	–	–	–	–	–

P:\PRODUCTION\PROJECTS\WALL ENGINEERING (WE)\WE-055 SHAWNEE NORTHSIDE WASTEWATER TREATMENT PLANT\DWG\ES2.DWG
6/2/2022 4:01 PM

WALL ENGINEERING
PO BOX 1457, DURANT, OK 74702
OKLAHOMA CA #5413 EXP. JUNE 30, 2023

SUBMITTAL / REVISIONS:

DATE	BY	SUBMITTAL / REVISION
.	.	.
.	.	.
.	.	.
.	.	.
.	.	.
.	.	.
.	.	.
.	.	.

SHAWNEE MUNICIPAL AUTHORITY
WASTEWATER SYSTEM IMPROVEMENTS
SHAWNEE, OKLAHOMA

ELECTRICAL CABLE SCHEDULE

PROJECT NO.
SHN-20-01
DATE
06/22
DRAWN BY:
CD
CHECKED BY:
BB
REVIEWED BY:
BB
SCALE:
AS SHOWN

BAR IS ONE INCH ON ORIGINAL DRAWING
0" 1"
IF NOT ONE INCH ON THIS SHEET, ADJUST SCALES ACCORDINGLY

SHEET
ES2

REGISTERED PROFESSIONAL ENGINEER
BRUCE W. BROWN
20995
06-01-2022
OKLAHOMA

BROWN ENGINEERS
501-448-0100

CABLE SCHEDULE

EQTP	EQNO	VOLTAGE_RATING	AMP_POLE	LOAD/CIRCUIT	PWR_ROUTE_TO	ENCLOSURE_RATING	DESCRIPTION_1	DIGITAL_CABLE	ANALOG_CABLE	I&C_ROUTE_TO
TS	1231b	–	–	–	–	–	AMB TEMP	2#14/THWN/1C	–	VCP–1231
FV	1231c	120VA–1P	–	–	–	–	PRESS FLUSH	3#14/THWN/1C	–	VCP–1231
MTR	1231c	480VA–3P	–	3HP/F20	VCP–1231	–	–	–	–	–
TS	1231c	–	–	–	–	–	MTR TEMP	2#14/THWN/1C	–	VCP–1231
TS	1231d	–	–	–	–	–	MTR TEMP	2#14/THWN/1C	–	VCP–1231
CB	1311	480VAC–3P	15A/3P	1HP/F20	IPC–3	–	–	–	–	–
FCV	1311	480VAC–3P	15A/3P	1HP/F20	CB–1311	–	–	6#14/THWN/1C	2–1ISP16/P–OS/1C	TB–BLOW
CB	1312	480VAC–3P	15A/3P	1HP/F20	IPC–3	–	–	–	–	–
FCV	1312	480VAC–3P	15A/3P	1HP/F20	CB–1312	–	–	6#14/THWN/1C	2–1ISP16/P–OS/1C	TB–BLOW
CB	1313	480VAC–3P	15A/3P	1HP/F20	IPC–3	–	–	–	–	–
FCV	1313	480VAC–3P	15A/3P	1HP/F20	CB–1313	–	–	6#14/THWN/1C	2–1ISP16/P–OS/1C	TB–BLOW
CB	1314	480VAC–3P	15A/3P	1HP/F20	IPC–3	–	–	–	–	–
FCV	1314	480VAC–3P	15A/3P	1HP/F20	CB–1314	–	–	6#14/THWN/1C	2–1ISP16/P–OS/1C	TB–BLOW
CB	1315	480VAC–3P	15A/3P	1HP/F20	IPC–3	–	–	–	–	–
FCV	1315	480VAC–3P	15A/3P	1HP/F20	CB–1315	–	–	6#14/THWN/1C	2–1ISP16/P–OS/1C	TB–BLOW
CB	1316	480VAC–3P	15A/3P	1HP/F20	IPC–3	–	–	–	–	–
FCV	1316	480VAC–3P	15A/3P	1HP/F20	CB–1316	–	–	6#14/THWN/1C	2–1ISP16/P–OS/1C	TB–BLOW
CB	1317	480VAC–3P	15A/3P	1HP/F20	IPC–3	–	–	–	–	–
FCV	1317	480VAC–3P	15A/3P	1HP/F20	CB–1317	–	–	6#14/THWN/1C	2–1ISP16/P–OS/1C	TB–BLOW
CB	1318	480VAC–3P	15A/3P	1HP/F20	IPC–3	–	–	–	–	–
FCV	1318	480VAC–3P	15A/3P	1HP/F20	CB–1318	–	–	6#14/THWN/1C	2–1ISP16/P–OS/1C	TB–BLOW
CB	1319	480VAC–3P	15A/3P	1HP/F20	IPC–3	–	–	–	–	–
FCV	1319	480VAC–3P	15A/3P	1HP/F20	CB–1319	–	–	6#14/THWN/1C	2–1ISP16/P–OS/1C	TB–BLOW
CB	1320	480VAC–3P	15A/3P	1HP/F20	IPC–3	–	–	–	–	–
FCV	1320	480VAC–3P	15A/3P	1HP/F20	CB–1320	–	–	6#14/THWN/1C	2–1ISP16/P–OS/1C	TB–BLOW
CB	1321	480VAC–3P	15A/3P	1HP/F20	IPC–3	–	–	–	–	–
FCV	1321	480VAC–3P	15A/3P	1HP/F20	CB–1321	–	–	6#14/THWN/1C	2–1ISP16/P–OS/1C	TB–BLOW
CB	1322	480VAC–3P	15A/3P	1HP/F20	IPC–3	–	–	–	–	–
FCV	1322	480VAC–3P	15A/3P	1HP/F20	CB–1322	–	–	6#14/THWN/1C	2–1ISP16/P–OS/1C	TB–BLOW
CB	1323	480VAC–3P	15A/3P	1HP/F20	IPC–3	–	–	–	–	–
FCV	1323	480VAC–3P	15A/3P	1HP/F20	CB–1323	–	–	6#14/THWN/1C	2–1ISP16/P–OS/1C	TB–BLOW
CB	1341	480VAC–3P	350A/3P	200HP/F350	SWBD–3	–	–	–	–	–
LCP	1341	480VAC–3P	350A/3P	200HP/F350	CB–1341	NEMA 12	–	18#14/THWN/1C	2–1ISP16/P–OS/1C	TB–BLOW
PDIT	1341	–	–	–	–	–	FILTER DIFF HIGH	2#14/THWN/1C	–	LCP–1341
TS	1341	–	–	–	–	–	MOTOR TEMP	2#14/THWN/1C	–	LCP–1341
PSH	1341	–	–	–	–	–	PRESS HIGH	2#14/THWN/1C	–	LCP–1341
TSHa	1341	–	–	–	–	–	TEMP HIGH	2#14/THWN/1C	–	LCP–1341
TSHb	1341	–	–	–	–	–	ENCL. TEMP HIGH	2#14/THWN/1C	–	LCP–1341
MTR	1341	480VAC–3P	–	200HP/F350	ESS–1341	–	–	–	–	–
MTR	1341b	120VAC–1P	20A/1P	1.5KVA/1F20N	IPC–3	–	–	–	–	–
CB	1342	480VAC–3P	350A/3P	200HP/F350	SWBD–3	–	–	–	–	–
LCP	1342	480VAC–3P	350A/3P	200HP/F350	CB–1342	NEMA 12	–	18#14/THWN/1C	2–1ISP16/P–OS/1C	TB–BLOW
PDIT	1342	–	–	–	–	–	FILTER DIFF HIGH	2#14/THWN/1C	–	LCP–1342
TS	1342	–	–	–	–	–	MOTOR TEMP	2#14/THWN/1C	–	LCP–1342
PSH	1342	–	–	–	–	–	PRESS HIGH	2#14/THWN/1C	–	LCP–1342
TSHa	1342	–	–	–	–	–	TEMP HIGH	2#14/THWN/1C	–	LCP–1342
TSHb	1342	–	–	–	–	–	ENCL. TEMP HIGH	2#14/THWN/1C	–	LCP–1342
MTR	1342	480VAC–3P	–	200HP/F350	ESS–1342	–	–	–	–	–
MTR	1342b	120VAC–1P	20A/1P	1.5KVA/1F20N	IPC–3	–	–	–	–	–
CB	1343	480VAC–3P	250A/3P	150HP/F250	SWBD–3	–	–	–	–	–
LCP	1343	480VAC–3P	250A/3P	150HP/F250	CB–1343	NEMA 12	–	18#14/THWN/1C	2–1ISP16/P–OS/1C	TB–BLOW
PDIT	1343	–	–	–	–	–	FILTER DIFF HIGH	2#14/THWN/1C	–	LCP–1343
TS	1343	–	–	–	–	–	MOTOR TEMP	2#14/THWN/1C	–	LCP–1343
PSH	1343	–	–	–	–	–	PRESS HIGH	2#14/THWN/1C	–	LCP–1343
TSHa	1343	–	–	–	–	–	TEMP HIGH	2#14/THWN/1C	–	LCP–1343
TSHb	1343	–	–	–	–	–	ENCL. TEMP HIGH	2#14/THWN/1C	–	LCP–1343
MTR	1343	480VAC–3P	–	150HP/F250	ESS–1343	–	–	–	–	–
MTR	1343b	120VAC–1P	20A/1P	1.5KVA/1F20N	IPC–3	–	–	–	–	–
CB	1344	480VAC–3P	250A/3P	150HP/F250	SWBD–3	–	–	–	–	–
LCP	1344	480VAC–3P	250A/3P	150HP/F250	CB–1344	NEMA 12	–	18#14/THWN/1C	2–1ISP16/P–OS/1C	TB–BLOW

WALL ENGINEERING
PO BOX 1457, DURANT, OK 74702
OKLAHOMA CA #5413 EXP. JUNE 30, 2023

SUBMITTAL / REVISIONS:

DATE	BY	SUBMITTAL / REVISION
.	.	.
.	.	.
.	.	.
.	.	.
.	.	.
.	.	.
.	.	.

SHAWNEE MUNICIPAL AUTHORITY
WASTEWATER SYSTEM IMPROVEMENTS
SHAWNEE, OKLAHOMA

ELECTRICAL CABLE SCHEDULE

PROJECT NO.
SHN–20–01

DATE
06/22

DRAWN BY:
CD

CHECKED BY:
BB

REVIEWED BY:
BB

SCALE:
AS SHOWN

BAR IS ONE INCH ON ORIGINAL DRAWING
0" 1"
IF NOT ONE INCH ON THIS SHEET, ADJUST SCALES ACCORDINGLY

SHEET
ES3

REGISTERED PROFESSIONAL ENGINEER
BRUCE W. BROWN
20995
06-01-2022
OKLAHOMA

BROWN ENGINEERS
501-448-0100

P:\PRODUCTION\PROJECTS\WALL ENGINEERING (WE)\WE–055 SHAWNEE NORTHSIDE WASTEWATER TREATMENT PLANT\DWG\ES3.DWG
5/20/2022 1:31 PM

CABLE SCHEDULE

EQTP	EQNO	VOLTAGE_RATING	AMP_POLE	LOAD/CIRCUIT	PWR_ROUTE_TO	ENCLOSURE_RATING	DESCRIPTION_1	DIGITAL_CABLE	ANALOG_CABLE	I&C_ROUTE_TO
PDIT	1344	–	–	–	–	–	FILTER DIFF HIGH	2#14/THWN/1C	–	LCP-1344
TS	1344	–	–	–	–	–	MOTOR TEMP	2#14/THWN/1C	–	LCP-1344
PSH	1344	–	–	–	–	–	PRESS HIGH	2#14/THWN/1C	–	LCP-1344
TSHa	1344	–	–	–	–	–	TEMP HIGH	2#14/THWN/1C	–	LCP-1344
TSHb	1344	–	–	–	–	–	ENCL. TEMP HIGH	2#14/THWN/1C	–	LCP-1344
MTR	1344	480VAC-3P	–	150HP/F250	ESS-1344	–	–	–	–	–
MTR	1344b	120VAC-1P	20A/1P	1.5KVA/1F20N	IPC-3	–	–	–	–	–
CB	1345	480VAC-3P	250A/3P	150HP/F250	SWBD-3	–	–	–	–	–
LCP	1345	480VAC-3P	250A/3P	150HP/F250	CB-1345	NEMA 12	–	18#14/THWN/1C	2-1ISP16/P-OS/1C	TB-BLOW
PDIT	1345	–	–	–	–	–	FILTER DIFF HIGH	2#14/THWN/1C	–	LCP-1345
TS	1345	–	–	–	–	–	MOTOR TEMP	2#14/THWN/1C	–	LCP-1345
PSH	1345	–	–	–	–	–	PRESS HIGH	2#14/THWN/1C	–	LCP-1345
TSHa	1345	–	–	–	–	–	TEMP HIGH	2#14/THWN/1C	–	LCP-1345
TSHb	1345	–	–	–	–	–	ENCL. TEMP HIGH	2#14/THWN/1C	–	LCP-1345
MTR	1345	480VAC-3P	–	150HP/F250	ESS-1345	–	–	–	–	–
MTR	1345b	120VAC-1P	20A/1P	1.5KVA/1F20N	IPC-3	–	–	–	–	–
CB	1346	480VAC-3P	250A/3P	150HP/F250	SWBD-3	–	–	–	–	–
LCP	1346	480VAC-3P	250A/3P	150HP/F250	CB-1346	NEMA 12	–	18#14/THWN/1C	2-1ISP16/P-OS/1C	TB-BLOW
PDIT	1346	–	–	–	–	–	FILTER DIFF HIGH	2#14/THWN/1C	–	LCP-1346
TS	1346	–	–	–	–	–	MOTOR TEMP	2#14/THWN/1C	–	LCP-1346
PSH	1346	–	–	–	–	–	PRESS HIGH	2#14/THWN/1C	–	LCP-1346
TSHa	1346	–	–	–	–	–	TEMP HIGH	2#14/THWN/1C	–	LCP-1346
TSHb	1346	–	–	–	–	–	ENCL. TEMP HIGH	2#14/THWN/1C	–	LCP-1346
MTR	1346	480VAC-3P	–	150HP/F250	ESS-1346	–	–	–	–	–
MTR	1346b	120VAC-1P	20A/1P	1.5KVA/1F20N	IPC-3	–	–	–	–	–
CB	1511	480VAC-3P	15A/3P	1HP/F20	IPC-4	–	–	–	–	–
FCV	1511	480VAC-3P	15A/3P	1HP/F20	CB-1511	–	–	6#14/THWN/1C	2-1ISP16/P-OS/1C	RTU-C
CB	1512	480VAC-3P	15A/3P	1HP/F20	IPC-4	–	–	–	–	–
FCV	1512	480VAC-3P	15A/3P	1HP/F20	CB-1512	–	–	6#14/THWN/1C	2-1ISP16/P-OS/1C	RTU-C
CB	1531	480VAC-3P	100A/3P	45KVA/F100	IPC-4	–	–	–	–	–
U	1531	COMM	–	–	–	–	MODBUS	–	BELDEN 3106A	VCP-1531
VCP	1531	120VAC-1P	–	45KVA/F100	CB-1531	NEMA 4X	–	–	1ISP16/P-OS/1C	RTU-C
RT	1531a	–	–	–	–	–	UV	–	1ISP16/P-OS/1C	VCP-1531
ZS	1531a	120VAC-1P	–	–	–	–	IN PLACE	VENDOR CABLE	–	VCP-1531
RT	1531b	–	–	–	–	–	UV	–	1ISP16/P-OS/1C	VCP-1531
ZS	1531b	120VAC-1P	–	–	–	–	IN PLACE	VENDOR CABLE	–	VCP-1531
RT	1531c	–	–	–	–	–	UV	–	1ISP16/P-OS/1C	VCP-1531
ZS	1531c	120VAC-1P	–	–	–	–	IN PLACE	VENDOR CABLE	–	VCP-1531
RT	1531d	–	–	–	–	–	UV	–	1ISP16/P-OS/1C	VCP-1531
ZS	1531d	120VAC-1P	–	–	–	–	IN PLACE	VENDOR CABLE	–	VCP-1531
CB	1561	120VAC-1P	20A/1P	0.5KVA/1F20N	IPC-4	–	–	–	–	–
LS	1561	120VAC-1P	20A/1P	0.5KVA/1F20N	CB-LS	–	LOW LEVEL	2#14/THWN/1C	–	VCP-1531
PIT	1600	–	–	–	–	–	–	–	1ISP16/P-OS/1C	RTU-C
CB	1611	480VAC-3P	15A/3P	1HP/F20	IPC-4	–	–	–	–	–
FCV	1611	480VAC-3P	15A/3P	1HP/F20	CB-1611	–	–	6#14/THWN/1C	2-1ISP16/P-OS/1C	RTU-C
CB	1641	480VAC-3P	90A/3P	50HP/F100	IPC-4	–	–	–	–	–
MTR	1641	480VAC-3P	–	40HP/F90	VFD-1641	–	–	–	–	–
VFD	1641	480VAC-3P	–	50HP/F100	CB-1641	NEMA 3R	–	8#14/THWN/1C	2-1ISP16/P-OS/1C	RTU-C
CB	1642	480VAC-3P	90A/3P	50HP/F100	IPC-4	–	–	–	–	–
MTR	1642	480VAC-3P	–	40HP/F90	VFD-1642	–	–	–	–	–
VFD	1642	480VAC-3P	–	50HP/F100	CB-1642	NEMA 3R	–	8#14/THWN/1C	2-1ISP16/P-OS/1C	RTU-C
CB	1721	120VAC-1P	20A/1P	50VA/1520N	IPC-3	–	–	–	–	–
FIT	1721	120VAC-1P	20A/1P	50VA/1F20N	CB-1721	–	–	–	1ISP16/P-OS/1C	TB-1031
CB	1731	480VAC-3P	60A/3P	20HP/F60	IPC-3	–	–	–	–	–
VCP	1731	480VAC-3P	–	20HP/F60	CB-1731	NEMA 4X	–	8#14/THWN/1C	–	TB-1031
CB	1801	480VAC-3P	20A/3P	1HP/F20	IPC-6	–	–	–	–	–
FCV	1801	480VAC-3P	15A/3P	1HP/F20	CB-1801	–	–	6#14/THWN/1C	2-1ISP16/P-OS/1C	VCP-1831
CB	1802	480VAC-3P	20A/3P	1HP/F20	IPC-6	–	–	–	–	–
FCV	1802	480VAC-3P	15A/3P	1HP/F20	CB-1802	–	–	6#14/THWN/1C	2-1ISP16/P-OS/1C	VCP-1831
CB	1831	480VAC-3P	20A/3P	12KVA/F20	IPC-6	–	–	–	–	–

P:\PRODUCTION\PROJECTS\WALL ENGINEERING (WE)\WE-055 SHAWNEE NORTHSIDE WASTEWATER TREATMENT PLANT\DWG\ES4.DWG
5/20/2022 1:31 PM

WALL ENGINEERING
PO BOX 1457, DURANT, OK 74702
OKLAHOMA CA #5413 EXP. JUNE 30, 2023

SUBMITTAL / REVISIONS:

DATE	BY	SUBMITTAL / REVISION
.	.	.
.	.	.
.	.	.
.	.	.
.	.	.
.	.	.
.	.	.

SHAWNEE MUNICIPAL AUTHORITY
WASTEWATER SYSTEM IMPROVEMENTS
SHAWNEE, OKLAHOMA

ELECTRICAL CABLE SCHEDULE

PROJECT NO.
SHN-20-01

DATE
06/22

DRAWN BY:
CD

CHECKED BY:
BB

REVIEWED BY:
BB

SCALE:
AS SHOWN

BAR IS ONE INCH ON ORIGINAL DRAWING
0" 1"
IF NOT ONE INCH ON THIS SHEET, ADJUST SCALES ACCORDINGLY

SHEET
ES4

REGISTERED PROFESSIONAL ENGINEER
BRUCE W. BROWN
BP 20995
OKLAHOMA
06-01-2022

BROWN ENGINEERS
501-448-0100

CABLE SCHEDULE

EQTP	EQNO	VOLTAGE_RATING	AMP_POLE	LOAD/CIRCUIT	PWR_ROUTE_TO	ENCLOSURE_RATING	DESCRIPTION_1	DIGITAL_CABLE	ANALOG_CABLE	I&C_ROUTE_TO
JB	1831	–	–	–	–	–	–	36#14/THWN/1C	–	VCP–1831
VCP	1831	480VAC–3P	–	12KVA/F20	CB–1831	NEMA 4X	–	4PR#14/P–OS/4C	2–1ISP16/P–OS/1C	RTU–E
REFER TO VCP	1831/1832	–	–	–	–	–	–	–	–	–
REFER TO VCP	1831/1832	–	–	–	–	–	–	–	–	–
CB	1832	480VAC–3P	20A/3P	12KVA/F20	IPC–6	–	–	–	–	–
JB	1832	–	–	–	–	–	–	36#14/THWN/1C	–	VCP–1832
VCP	1832	480VAC–3P	–	12KVA/F20	CB–1832	NEMA 4X	–	4PR#14/P–OS/4C	2–1ISP16/P–OS/1C	RTU–E
MTR	1841	480VAC–3P	–	5HP/F20	VCP–1831	–	–	–	–	–
MTR	1842	480VAC–3P	–	2HP/F20	VCP–1831	–	–	–	–	–
MTR	1843	480VAC–3P	–	5HP/F20	VCP–1832	–	–	–	–	–
MTR	1844	480VAC–3P	–	2HP/F20	VCP–1832	–	–	–	–	–
CB	1845	480VAC–3P	25A/3P	10HP/F25	IPC–6	–	–	–	–	–
FVNR	1845	480VAC–3P	NEMA SIZE 1	10HP/F25	CB–1845	NEMA 4X	–	2#14/THWN/1C	–	VCP–1831/1832
HS	1845		–	–	–	–	E–STOP	2#14/THWN/1C	–	FVNR–1845
MTR	1845	480VAC–3P	–	10HP/F25	FVNR–1845	–	–	–	–	–
CB	2121	120VAC–1P	20A/1P	50VA/1F20N	IPC–1	–	–	–	–	–
FIT	2121	120VAC–1P	20A/1P	50VA/1F20N	CB–2121	–	–	–	1ISP16/P–OS/1C	RTU–A
CB	2131	480VAC–3P	60A/3P	20HP/F60	HP–1	–	–	–	–	–
JS	2131	120VAC–1P	–	–	–	–	TORQUE	2#14/THWN/1C	–	VCP–2131
VCP	2131	480VAC–3P	–	20HP/F60	CB–2131	NEMA 4X	–	20#14/THWN/1C	–	RTU–A
ZS	2131	120VAC–1P	–	–	–	–	ZERO SPEED	2#14/THWN/1C	–	VCP–2131
HS	2131a	120VAC–1P	–	–	–	–	HOA	2#14/THWN/1C	–	VCP–2131
MTR	2131a	480VAC–3P	–	1HP/F20	VCP–2131	–	–	–	–	–
TS	2131a	–	–	–	–	–	HI TEMP	2#14/THWN/1C	–	VCP–2131
HS	2131b	120VAC–1P	–	–	–	–	E–STOP	2#14/THWN/1C	–	VCP–2131
MTR	2131b	480VAC–3P	–	15HP/F40	VCP–2131	–	–	–	–	–
TS	2131b	–	–	–	–	–	HI TEMP	2#14/THWN/1C	–	VCP–2131
HS	2131c	120VAC–1P	–	–	–	–	HOA	2#14/THWN/1C	–	VCP–2131
MTR	2131c	480VAC–3P	–	1HP/F20	VCP–2131	–	–	–	–	–
HS	2131d	120VAC–1P	–	–	–	–	E–STOP	2#14/THWN/1C	–	VCP–2131
HS	2131e	120VAC–1P	–	–	–	–	HOA	2#14/THWN/1C	–	VCP–2131
HS	2131f	120VAC–1P	–	–	–	–	E–STOP	2#14/THWN/1C	–	VCP–2131
CB	2141	120VAC–1P	20A/1P	50VA/1F20N	IPC–6	–	–	–	–	–
SIC	2141	120VAC–1P	20A/1P	50VA/1F20N	CB–2141	–	–	10#14/THWN/1C	2ISP16/P–OS/1C	VCP–1831
CB	2142	120VAC–1P	20A/1P	50VA/1F20N	IPC–6	–	–	–	–	–
SIC	2142	120VAC–1P	20A/1P	50VA/1F20N	CB–2142	–	–	10#14/THWN/1C	2ISP16/P–OS/1C	VCP–1831
CB	2211	480VAC–3P	15A/3P	1HP/F20	IPC–6	–	–	–	–	–
FCV	2211	480VAC–3P	15A/3P	1HP/F20	CB–2211	–	–	6#14/THWN/1C	2–1ISP16/P–OS/1C	RTU–E
CB	2212	480VAC–3P	15A/3P	1HP/F20	IPC–6	–	–	–	–	–
FCV	2212	480VAC–3P	15A/3P	1HP/F20	CB–2212	–	–	6#14/THWN/1C	2–1ISP16/P–OS/1C	RTU–E
CB	2213	480VAC–3P	15A/3P	1HP/F20	IPC–6	–	–	–	–	–
FCV	2213	480VAC–3P	15A/3P	1HP/F20	CB–2213	–	–	6#14/THWN/1C	2–1ISP16/P–OS/1C	RTU–E
CB	2214	120VAC–1P	15A/3P	1HP/F20	IPC–6	–	–	–	–	–
FCV	2214	480VAC–3P	15A/3P	1HP/F20	CB–2215	–	–	6#14/THWN/1C	2–1ISP16/P–OS/1C	RTU–E
CB	2215	480VAC–3P	15A/3P	1HP/F20	IPC–6	–	–	–	–	–
FCV	2215	480VAC–3P	15A/3P	1HP/F20	CB–2214	–	–	6#14/THWN/1C	2–1ISP16/P–OS/1C	RTU–E
CB	2216	480VAC–3P	15A/3P	1HP/F20	IPC–6	–	–	–	–	–
FCV	2216	480VAC–3P	15A/3P	1HP/F20	CB–2216	–	–	6#14/THWN/1C	2–1ISP16/P–OS/1C	RTU–E
CB	2221	120VAC–1P	20A/1P	50VA/1F20N	IPC–1	–	–	–	–	–
CB	2221	120VAC–1P	20A/1P	50VA/1F20N	IPC–6	–	–	–	–	–
FIT	2221	120VAC–1P	20A/1P	50VA/1F20N	CB–2221	–	–	–	1ISP16/P–OS/1C	VCP–1831
FIT	2221	120VAC–1P	20A/1P	50VA/1F20N	CB–2221	–	–	–	1ISP16/P–OS/1C	RTU–A
CB	2222	120VAC–1P	20A/1P	50VA/1F20N	IPC–6	–	–	–	–	–
FIT	2222	120VAC–1P	20A/1P	50VA/1F20N	CB–2222	–	–	–	1ISP16/P–OS/1C	VCP–1831
CB	2232	480VAC–3P	60A/3P	20HP/F60	HP–1	–	–	–	–	–
JS	2232	120VAC–1P	–	–	–	–	TORQUE	2#14/THWN/1C	–	VCP–2232
VCP	2232	480VAC–3P	–	20HP/F60	CB–2232	NEMA 4X	–	20#14/THWN/1C	–	RTU–A
ZS	2232	120VAC–1P	–	–	–	–	ZERO SPEED	2#14/THWN/1C	–	VCP–2232
HS	2232a	120VAC–1P	–	–	–	–	HOA	2#14/THWN/1C	–	VCP–2232
MTR	2232a	480VAC–3P	–	1HP/F20	VCP–2232	–	–	–	–	–

WALL ENGINEERING
PO BOX 1457, DURANT, OK 74702
OKLAHOMA CA #5413 EXP. JUNE 30, 2023

SUBMITTAL / REVISIONS:

DATE	BY	SUBMITTAL / REVISION
.	.	.
.	.	.
.	.	.
.	.	.
.	.	.
.	.	.
.	.	.

SHAWNEE MUNICIPAL AUTHORITY
WASTEWATER SYSTEM IMPROVEMENTS
SHAWNEE, OKLAHOMA

ELECTRICAL CABLE SCHEDULE

PROJECT NO.
SHN–20–01
DATE
06/22
DRAWN BY:
CD
CHECKED BY:
BB
REVIEWED BY:
BB
SCALE:
AS SHOWN

BAR IS ONE INCH ON ORIGINAL DRAWING
0" 1"
IF NOT ONE INCH ON THIS SHEET, ADJUST SCALES ACCORDINGLY

SHEET
ES5

REGISTERED PROFESSIONAL ENGINEER
BRUCE W. BROWN
20995
OKLAHOMA
06-01-2022

BROWN ENGINEERS
501-448-0100

P:\PRODUCTION\PROJECTS\WALL ENGINEERING (WE)\WE–055 SHAWNEE NORTHSIDE WASTEWATER TREATMENT PLANT\DWG\ES5.DWG
5/20/2022 1:32 PM

CABLE SCHEDULE

EQTP	EQNO	VOLTAGE_RATING	AMP_POLE	LOAD/CIRCUIT	PWR_ROUTE_TO	ENCLOSURE_RATING	DESCRIPTION_1	DIGITAL_CABLE	ANALOG_CABLE	I&C_ROUTE_TO
TS	2232a	–	–	–	–	–	HI TEMP	2#14/THWN/1C	–	VCP–2232
HS	2232b	120VAC–1P	–	–	–	–	E–STOP	2#14/THWN/1C	–	VCP–2232
MTR	2232b	480VAC–3P	–	15HP/F40	VCP–2232	–	–	–	–	–
TS	2232b	–	–	–	–	–	HI TEMP	2#14/THWN/1C	–	VCP–2232
HS	2232c	120VAC–1P	–	–	–	–	HOA	2#14/THWN/1C	–	VCP–2232
MTR	2232c	480VAC–3P	–	1HP/F20	VCP–2232	–	–	–	–	–
HS	2232d	120VAC–1P	–	–	–	–	E–STOP	2#14/THWN/1C	–	VCP–2232
HS	2232e	120VAC–1P	–	–	–	–	HOA	2#14/THWN/1C	–	VCP–2232
HS	2232f	120VAC–1P	–	–	–	–	E–STOP	2#14/THWN/1C	–	VCP–2232
CB	2241	480VAC–3P	30A/3P	10HP/F30	IPC–6	–	–	–	–	–
MTR	2241	480VAC–3P	–	7.5HP/F20	VFD–2241	–	–	–	–	–
VFD	2241	480VAC–3P	–	10HP/F30	CB–2241	NEMA 3R	–	8#14/THWN/1C	2–1ISP16/P–OS/1C	VCP–1831/1832
CB	2242	480VAC–3P	30A/3P	10HP/F30	IPC–6	–	–	–	–	–
MTR	2242	480VAC–3P	–	7.5HP/F20	VFD–2242	–	–	–	–	–
VFD	2242	480VAC–3P	–	10HP/F30	CB–2242	NEMA 3R	–	8#14/THWN/1C	2–1ISP16/P–OS/1C	VCP–1831/1832
CB	2312	480VAC–3P	15A/3P	1HP/F20	IPC–1	–	–	–	–	–
FCV	2312	480VAC–3P	15A/3P	1HP/F20	CB–2312	–	–	6#14/THWN/1C	2–1ISP16/P–OS/1C	RTU–A
CB	2313	480VAC–3P	15A/3P	1HP/F20	IPC–1	–	–	–	–	–
FCV	2313	480VAC–3P	15A/3P	1HP/F20	CB–2313	–	–	6#14/THWN/1C	2–1ISP16/P–OS/1C	RTU–A
CB	2321	120VAC–1P	20A/1P	50VA/1F20N	IPC–1	–	–	–	–	–
FIT	2321	120VAC–1P	20A/1P	50VA/1F20N	CB–2321	–	–	–	1ISP16/P–OS/1C	RTU–A
CB	2321a	120VAC–1P	20A/1P	50VA/1F20N	IPC–4	–	–	–	–	–
FIT	2321a	120VAC–1P	20A/1P	50VA/1F20N	CB–2321	–	–	–	1ISP16/P–OS/1C	RTU–C
CB	2431	120VAC–1P	20A/1P	1.5HP/1F20N	IPC–5	–	–	–	–	–
VCP	2431	120VAC–1P	–	1.5KVA/1F20N	CB–2431	NEMA 4X	–	24#14/THWN/1C	–	RTU–D
CB	2431a	120VAC–1P	20A/1P	50VA/1F20N	IPC–5	–	–	–	–	–
LIT	2431a	120VAC–1P	20A/1P	50VA/1F20	CB–2431a	–	–	–	1ISP16/P–OS/1C	VCP–2431
CB	2441	480VAC–3P	200A/3P	100HP/F200	IPC–5	–	–	–	–	–
MS	2441	–	–	–	–	–	SEAL FAIL	VENDOR CABLE	–	TB–2441
MTR	2441	480VAC–3P	–	75HP/VENDOR CABLE	VFD–2441	–	–	–	–	–
TB	2441	–	–	–	–	NEMA 4X	–	–	2–1ISP16/P–OS/1C	VCP–2431
TS	2441	–	–	–	–	–	OVER TEMP	–	VENDOR CABLE	TB–2441
VFD	2441	480VAC–3P	–	100HP/F200	CB–2441	NEMA 3R	–	8#14/THWN/1C	2–1ISP16/P–OS/1C	VCP–2431
CB	2442	480VAC–3P	200A/3P	100HP/F200	IPC–5	–	–	–	–	–
MS	2442	–	–	–	–	–	SEAL FAIL	VENDOR CABLE	–	TB–2442
MTR	2442	480VAC–3P	–	75HP/VENDOR CABLE	VFD–2442	–	–	–	–	–
TB	2442	–	–	–	–	NEMA 4X	–	–	2–1ISP16/P–OS/1C	VCP–2431
TS	2442	–	–	–	–	–	OVER TEMP	–	VENDOR CABLE	TB–2442
VFD	2442	480VAC–3P	–	100HP/F200	CB–2442	NEMA 3R	–	8#14/THWN/1C	2–1ISP16/P–OS/1C	VCP–2431
CB	2443	480VAC–3P	200A/3P	100HP/F200	IPC–5	–	–	–	–	–
MS	2443	–	–	–	–	–	SEAL FAIL	VENDOR CABLE	–	TB–2443
MTR	2443	480VAC–3P	–	75HP/VENDOR CABLE	VFD–2443	–	–	–	–	–
TB	2443	–	–	–	–	NEMA 4X	–	–	2–1ISP16/P–OS/1C	VCP–2431
TS	2443	–	–	–	–	–	OVER TEMP	–	VENDOR CABLE	TB–2443
VFD	2443	480VAC–3P	–	100HP/F200	CB–2443	NEMA 3R	–	8#14/THWN/1C	2–1ISP16/P–OS/1C	VCP–2431
CB	2511	480VAC–3P	15A/3P	1HP/F20	IPC–5	–	–	–	–	–
FCV	2511	480VAC–3P	15A/3P	1HP/F20	CB–2511	–	–	6#14/THWN/1C	2–1ISP16/P–OS/1C	RTU–D
CB	2512	480VAC–3P	15A/3P	1HP/F20	IPC–5	–	–	–	–	–
FCV	2512	480VAC–3P	15A/3P	1HP/F20	CB–2512	–	–	6#14/THWN/1C	2–1ISP16/P–OS/1C	RTU–D
CB	2513	480VAC–3P	15A/3P	1HP/F20	IPC–5	–	–	–	–	–
FCV	2513	480VAC–3P	15A/3P	1HP/F20	CB–2513	–	–	6#14/THWN/1C	2–1ISP16/P–OS/1C	RTU–D
CB	2521	120VAC–1P	20A/1P	50VA/1F20	IPC–5	–	–	–	–	–
FIT	2521	120VAC–1P	20A/1P	50VA/1F20	CB–2521	–	–	–	1ISP16/P–OS/1C	RTU–D
CB	2731	120VAC–1P	20A/1P	1.5KVA/1F20N	IPC–2	–	–	–	–	–
VCP	2731	120VAC–1P	–	1.5KVA/1F20N	CB–2731	NEMA 4X	–	24#14/THWN/1C	–	RTU–B
CB	2731a	120VAC–1P	20A/1P	50VA/1F20N	IPC–2	–	–	–	–	–
LIT	2731a	120VAC–1P	20A/1P	50VA/1F20N	CB–2731a	–	–	–	1ISP16/P–OS/1C	VCP–2731
CB	2741	480VAC–3P	100A/3P	50HP/F100	HP–2	–	–	–	–	–
MS	2741	–	–	–	–	–	SEAL FAIL	VENDOR CABLE	–	TB–2741
MTR	2741	480VAC–3P	–	30HP/VENDOR CABLE	VFD–2741	–	–	–	–	–

P:\PRODUCTION\PROJECTS\WALL ENGINEERING (WE)\WE–055 SHAWNEE NORTHSIDE WASTEWATER TREATMENT PLANT\DWG\ES6.DWG
5/20/2022 1:32 PM

WALL ENGINEERING
PO BOX 1457, DURANT, OK 74702
OKLAHOMA CA #5413 EXP. JUNE 30, 2023

SUBMITTAL / REVISIONS:

DATE	BY	SUBMITTAL / REVISION
.	.	.
.	.	.
.	.	.
.	.	.
.	.	.
.	.	.
.	.	.
.	.	.

SHAWNEE MUNICIPAL AUTHORITY
WASTEWATER SYSTEM IMPROVEMENTS
SHAWNEE, OKLAHOMA

ELECTRICAL CABLE SCHEDULE

PROJECT NO.
SHN–20–01
DATE
06/22
DRAWN BY:
CD
CHECKED BY:
BB
REVIEWED BY:
BB
SCALE:
AS SHOWN

BAR IS ONE INCH ON ORIGINAL DRAWING
0" 1"
IF NOT ONE INCH ON THIS SHEET, ADJUST SCALES ACCORDINGLY

SHEET
ES6

REGISTERED PROFESSIONAL ENGINEER
BRUCE BROWN
20995
OKLAHOMA
6-01-2022
BROWN ENGINEERS
501-448-0100

CABLE SCHEDULE

EQTP	EQNO	VOLTAGE_RATING	AMP_POLE	LOAD/CIRCUIT	PWR_ROUTE_TO	ENCLOSURE_RATING	DESCRIPTION_1	DIGITAL_CABLE	ANALOG_CABLE	I&C_ROUTE_TO
TB	2741	–	–	–	–	NEMA 4X	–	–	2–1ISP16/P–OS/1C	VCP–2731
TS	2741	–	–	–	–	–	OVER TEMP	–	VENDOR CABLE	TB–2741
VFD	2741	480VAC–3P	–	50HP/F100	CB–2741	NEMA 3R	–	8#14/THWN/1C	2–1ISP16/P–OS/1C	VCP–2731
CB	2742	480VAC–3P	100A/3P	50HP/F100	HP–2	–	–	–	–	–
MS	2742	–	–	–	–	–	SEAL FAIL	VENDOR CABLE	–	TB–2742
MTR	2742	480VAC–3P	–	30HP/VENDOR CABLE	VFD–2742	–	–	–	–	–
TB	2742	–	–	–	–	NEMA 4X	–	–	2–1ISP16/P–OS/1C	VCP–2731
TS	2742	–	–	–	–	–	OVER TEMP	–	VENDOR CABLE	TB–2742
VFD	2742	480VAC–3P	–	50HP/F100	CB–2742	NEMA 3R	–	8#14/THWN/1C	2–1ISP16/P–OS/1C	VCP–2731
CB	2743	480VAC–3P	25A/3P	10HP/F25	IPC–2	–	–	–	–	–
MTR	2743	480VAC–3P	–	10HP/F25	CB–2743	–	HOIST	–	–	–
CB	2821	120VAC–1P	20A/1P	50VA/1F20N	IPC–2	–	–	–	–	–
FIT	2821	120VAC–1P	20A/1P	50VA/1F20N	CB–2821	–	–	–	1ISP16/P–OS/1C	RTU–B
CB	3311	480VAC–3P	15A/3P	1HP/F20	IPC–1	–	–	–	–	–
FCV	3311	480VAC–3P	15A/3P	1HP/F20	CB–3311	–	–	6#14/THWN/1C	2–1ISP16/P–OS/1C	RTU–A
CB	4011	480VAC–3P	15A/3P	1HP/F20	IPC–1	–	–	–	–	–
FCV	4011	480VAC–3P	15A/3P	1HP/F20	CB–4011	–	–	6#14/THWN/1C	2–1ISP16/P–OS/1C	RTU–A
CB	4012	480VAC–3P	15A/3P	1HP/F20	IPC–1	–	–	–	–	–
FCV	4012	480VAC–3P	15A/3P	1HP/F20	CB–4012	–	–	6#14/THWN/1C	2–1ISP16/P–OS/1C	RTU–A
CB	4013	480VAC–3P	15A/3P	1HP/F20	IPC–1	–	–	–	–	–
FCV	4013	480VAC–3P	15A/3P	1HP/F20	CB–4013	–	–	6#14/THWN/1C	2–1ISP16/P–OS/1C	RTU–A
CB	4014	480VAC–3P	15A/3P	1HP/F20	IPC–1	–	–	–	–	–
FCV	4014	480VAC–3P	15A/3P	1HP/F20	CB–4014	–	–	6#14/THWN/1C	2–1ISP16/P–OS/1C	RTU–A
CB	4021	120VAC–1P	20A/1P	50VA/1F20N	IPC–1	–	–	–	–	–
FIT	4021	120VAC–1P	20A/1P	50VA/1F20N	CB–4021	–	–	–	1ISP16/P–OS/1C	RTU–A
CB	4022	120VAC–1P	20A/1P	50VA/1F20N	IPC–1	–	–	–	–	–
FIT	4022	120VAC–1P	20A/1P	50VA/1F20N	CB–4022	–	–	–	1ISP16/P–OS/1C	RTU–A
CB	4023	120VAC–1P	20A/1P	50VA/1F20N	IPC–1	–	–	–	–	–
FIT	4023	120VAC–1P	20A/1P	50VA/1F20N	CB–4023	–	–	–	1ISP16/P–OS/1C	RTU–A
CB	4024	120VAC–1P	20A/1P	50VA/1F20N	IPC–1	–	–	–	–	–
FIT	4024	120VAC–1P	20A/1P	50VA/1F20N	CB–4024	–	–	–	1ISP16/P–OS/1C	RTU–A
CB	4031	120VAC–1P	20A/1P	1.5KVA/1F20N	IPC–1	–	–	–	–	–
REFER TO VCP	4031	–	–	–	–	–	–	–	–	–
VCP	4031	120VAC–1P	–	1.5KVA/1F20N	CB–4031	NEMA 4X	–	30#14/THWN/1C	2–1ISP16/P–OS/1C	RTU–A
CB	4031a	120VAC–1P	20A/1P	50VA/1F20N	IPC–1	–	–	–	–	–
LIT	4031a	120VAC–1P	20A/1P	50VA/1F20N	CB–4031a	–	–	–	1ISP16/P–OS/1C	VCP–4031
CB	4041	480VAC–3P	200A/3P	100HP/F200	HP–1	–	–	–	–	–
MS	4041	–	–	–	–	–	SEAL FAIL	VENDOR CABLE	–	TB–4041
MTR	4041	480VAC–3P	–	75HP/VENDOR CABLE	VFD–4041	–	–	–	–	–
TB	4041	–	–	–	–	CL1, DIV 1	–	–	2–1ISP16/P–OS/1C	VCP–4031
TS	4041	–	–	–	–	–	OVER TEMP	–	VENDOR CABLE	TB–4041
VFD	4041	480VAC–3P	–	100HP/F200	CB–4041	NEMA 3R	–	8#14/THWN/1C	2–1ISP16/P–OS/1C	VCP–4031
CB	4042	480VAC–3P	200A/3P	100HP/F200	HP–1	–	–	–	–	–
MS	4042	–	–	–	–	–	SEAL FAIL	VENDOR CABLE	–	TB–4042
MTR	4042	480VAC–3P	–	75HP/VENDOR CABLE	VFD–4042	–	–	–	–	–
TB	4042	–	–	–	–	CL1, DIV 1	–	–	2–1ISP16/P–OS/1C	VCP–4031
TS	4042	–	–	–	–	–	OVER TEMP	–	VENDOR CABLE	TB–4042
VFD	4042	480VAC–3P	–	100HP/F200	CB–4042	NEMA 3R	–	8#14/THWN/1C	2–1ISP16/P–OS/1C	VCP–4031
CB	4043	480VAC–3P	200A/3P	100HP/F200	HP–1	–	–	–	–	–
MS	4043	–	–	–	–	–	SEAL FAIL	VENDOR CABLE	–	TB–4043
MTR	4043	480VAC–3P	–	75HP/VENDOR CABLE	VFD–4043	–	–	–	–	–
TB	4043	–	–	–	–	CL1, DIV 1	–	–	2–1ISP16/P–OS/1C	VCP–4031
TS	4043	–	–	–	–	–	OVER TEMP	–	VENDOR CABLE	TB–4043
VFD	4043	480VAC–3P	–	100HP/F200	CB–4043	NEMA 3R	–	8#14/THWN/1C	2–1ISP16/P–OS/1C	VCP–4031
CB	4044	480VAC–3P	200A/3P	100HP/F200	HP–1	–	–	–	–	–
MS	4044	–	–	–	–	–	SEAL FAIL	VENDOR CABLE	–	TB–4044
MTR	4044	480VAC–3P	–	75HP/VENDOR CABLE	VFD–4044	–	–	–	–	–
TB	4044	–	–	–	–	CL1, DIV 1	–	–	2–1ISP16/P–OS/1C	VCP–4031
TS	4044	–	–	–	–	–	OVER TEMP	–	VENDOR CABLE	TB–4044
VFD	4044	480VAC–3P	–	100HP/F200	CB–4044	NEMA 3R	–	8#14/THWN/1C	2–1ISP16/P–OS/1C	VCP–4031

P:\PRODUCTION\PROJECTS\WALL ENGINEERING (WE)\WE–055 SHAWNEE NORTHSIDE WASTEWATER TREATMENT PLANT\DWG\ES7.DWG
5/20/2022 1:33 PM

WALL ENGINEERING
PO BOX 1457, DURANT, OK 74702
OKLAHOMA CA #5413 EXP. JUNE 30, 2023

SUBMITTAL / REVISIONS:

DATE	BY	SUBMITTAL / REVISION
.	.	.
.	.	.
.	.	.
.	.	.
.	.	.
.	.	.
.	.	.
.	.	.

SHAWNEE MUNICIPAL AUTHORITY
WASTEWATER SYSTEM IMPROVEMENTS
SHAWNEE, OKLAHOMA

ELECTRICAL CABLE SCHEDULE

PROJECT NO.
SHN–20–01
DATE
06/22
DRAWN BY:
CD
CHECKED BY:
BB
REVIEWED BY:
BB
SCALE:
AS SHOWN

BAR IS ONE INCH ON ORIGINAL DRAWING
0" 1"
IF NOT ONE INCH ON THIS SHEET, ADJUST SCALES ACCORDINGLY

SHEET
ES7

BRUCE BROWN 20995 REGISTERED PROFESSIONAL ENGINEER OKLAHOMA 06-01-2023
BROWN ENGINEERS 501-448-0100

CABLE SCHEDULE

EQTP	EQNO	VOLTAGE_RATING	AMP_POLE	LOAD/CIRCUIT	PWR_ROUTE_TO	ENCLOSURE_RATING	DESCRIPTION_1	DIGITAL_CABLE	ANALOG_CABLE	I&C_ROUTE_TO
AAH	4081	120VAC-1P	20A/1P	50VA/1F20N	CB-4081	–	GAS	–	1ISP16/P-OS/1C	RTU-A
CB	4081	120VAC-1P	20A/1P	50VA/1F20N	IPC-1	–	–	–	–	–
AAH	4082	120VAC-1P	20A/1P	50VA/1F20N	CB-4082	–	GAS	–	1ISP16/P-OS/1C	RTU-A
CB	4082	120VAC-1P	20A/1P	50VA/1F20N	IPC-1	–	–	–	–	–
CB	8011	480VAC-3P	25A/3P	6HP/F25	IPC-2	–	–	–	–	–
FVNR	8011	480VAC-3P	NEMA SIZE 1	6HP/F20	CB-8011	NEMA 4X	–	6#14/THWN/1C	–	RTU-B
MS	8011	–	–	–	–	–	SEAL FAIL	VENDOR CABLE	–	FVNR-8011
MTR	8011	480VAC-3P	–	6HP/F25	FVNR-8011	–	–	–	–	–
TS	8011	–	–	–	–	–	OVER TEMP	–	VENDOR CABLE	FVNR-8011
CB	8012	480VAC-3P	25A/3P	6HP/F25	IPC-2	–	–	–	–	–
FVNR	8012	480VAC-3P	NEMA SIZE 1	6HP/F20	CB-8012	NEMA 4X	–	6#14/THWN/1C	–	RTU-B
MS	8012	–	–	–	–	–	SEAL FAIL	VENDOR CABLE	–	FVNR-8012
MTR	8012	480VAC-3P	–	6HP/F25	FVNR-8012	–	–	–	–	–
TS	8012	–	–	–	–	–	OVER TEMP	–	VENDOR CABLE	FVNR-8012
CB	8031	120VAC-1P	20A/1P	1.5KVA/1F20N	IPC-2	–	–	–	–	–
REFER TO VCP	8031	–	–	–	–	–	–	–	–	–
VCP	8031	120VAC-1P	–	1.5KVA/1F20N	CB-8031	NEMA 4X	–	30#14/THWN/1C	2-1ISP16/P-OS/1C	RTU-B
CB	8031a	120VAC-1P	20A/1P	50VA/1F20N	IPC-2	–	–	–	–	–
LIT	8031a	120VAC-1P	20A/1P	50VA/1F20N	CB-8031a	–	–	–	1ISP16/P-OS/1C	VCP-8031
CB	8041	480VAC-3P	100A/3P	50HP/F100	HP-2	–	–	–	–	–
MS	8041	–	–	–	–	–	SEAL FAIL	VENDOR CABLE	–	TB-8041
MTR	8041	480VAC-3P	–	40HP/VENDOR CABLE	VFD-8041	–	–	–	–	–
TB	8041	–	–	–	–	NEMA 4X	–	–	2-1ISP16/P-OS/1C	VCP-8031
TS	8041	–	–	–	–	–	OVER TEMP	–	VENDOR CABLE	TB-8041
VFD	8041	480VAC-3P	–	50HP/F100	CB-8041	NEMA 3R	–	8#14/THWN/1C	2-1ISP16/P-OS/1C	VCP-8031
CB	8042	480VAC-3P	100A/3P	50HP/F100	HP-2	–	–	–	–	–
MS	8042	–	–	–	–	–	SEAL FAIL	VENDOR CABLE	–	TB-8042
MTR	8042	480VAC-3P	–	40HP/VENDOR CABLE	VFD-8042	–	–	–	–	–
TB	8042	–	–	–	–	NEMA 4X	–	–	2-1ISP16/P-OS/1C	VCP-8031
TS	8042	–	–	–	–	–	OVER TEMP	–	VENDOR CABLE	TB-8042
VFD	8042	480VAC-3P	–	50HP/F100	CB-8042	NEMA 3R	–	8#14/THWN/1C	2-1ISP16/P-OS/1C	VCP-8031
CB	8043	480VAC-3P	100A/3P	50HP/F100	HP-2	–	–	–	–	–
MS	8043	–	–	–	–	–	SEAL FAIL	VENDOR CABLE	–	TB-8043
MTR	8043	480VAC-3P	–	40HP/VENDOR CABLE	VFD-8043	–	–	–	–	–
TB	8043	–	–	–	–	NEMA 4X	–	–	2-1ISP16/P-OS/1C	VCP-8031
TS	8043	–	–	–	–	–	OVER TEMP	–	VENDOR CABLE	TB-8043
VFD	8043	480VAC-3P	–	50HP/F100	CB-8043	NEMA 3R	–	8#14/THWN/1C	2-1ISP16/P-OS/1C	VCP-8031
CB	8044	480VAC-3P	100A/3P	50HP/F100	HP-2	–	–	–	–	–
MS	8044	–	–	–	–	–	SEAL FAIL	VENDOR CABLE	–	TB-8044
MTR	8044	480VAC-3P	–	40HP/VENDOR CABLE	VFD-8044	–	–	–	–	–
TB	8044	–	–	–	–	NEMA 4X	–	–	2-1ISP16/P-OS/1C	VCP-8031
TS	8044	–	–	–	–	–	OVER TEMP	–	VENDOR CABLE	TB-8044
VFD	8044	480VAC-3P	–	50HP/F100	CB-8044	NEMA 3R	–	8#14/THWN/1C	2-1ISP16/P-OS/1C	VCP-8031
CB	8051	480VAC-3P	15A/3P	1HP/F20	IPC-2	–	–	–	–	–
FCV	8051	480VAC-3P	15A/3P	1HP/F20	CB-8051	–	–	6#14/THWN/1C	2-1ISP16/P-OS/1C	RTU-B
CB	8052	480VAC-3P	15A/3P	1HP/F20	IPC-2	–	–	–	–	–
FCV	8052	480VAC-3P	15A/3P	1HP/F20	CB-8052	–	–	6#14/THWN/1C	2-1ISP16/P-OS/1C	RTU-B
CB	9011	480VAC-3P	15A/3P	1HP/F20	IPC-2	–	–	–	–	–
FCV	9011	480VAC-3P	15A/3P	1HP/F20	CB-9011	–	–	6#14/THWN/1C	2-1ISP16/P-OS/1C	RTU-B
CB	9012	480VAC-3P	15A/3P	1HP/F20	IPC-2	–	–	–	–	–
FCV	9012	480VAC-3P	15A/3P	1HP/F20	CB-9012	–	–	6#14/THWN/1C	2-1ISP16/P-OS/1C	RTU-B
CB	9013	480VAC-3P	15A/3P	1HP/F20	IPC-2	–	–	–	–	–
FCV	9013	480VAC-3P	15A/3P	1HP/F20	CB-9013	–	–	6#14/THWN/1C	2-1ISP16/P-OS/1C	RTU-B
CB	9014	480VAC-3P	15A/3P	1HP/F20	IPC-2	–	–	–	–	–
FCV	9014	480VAC-3P	15A/3P	1HP/F20	CB-9014	–	–	6#14/THWN/1C	2-1ISP16/P-OS/1C	RTU-B
CB	9021	120VAC-1P	20A/1P	50VA/1F20N	IPC-2	–	–	–	–	–
FIT	9021	120VAC-1P	20A/1P	50VA/1F20N	CB-9021	–	–	–	1ISP16/P-OS/1C	RTU-B
CB	9022	120VAC-1P	20A/1P	50VA/1F20N	IPC-2	–	–	–	–	–
FIT	9022	120VAC-1P	20A/1P	50VA/1F20N	CB-9022	–	–	–	1ISP16/P-OS/1C	RTU-B
CB	9023	120VAC-1P	20A/1P	50VA/1F20N	IPC-2	–	–	–	–	–

P:\PRODUCTION\PROJECTS\WALL ENGINEERING (WE)\WE-055 SHAWNEE NORTHSIDE WASTEWATER TREATMENT PLANT\DWG\ES8.DWG
5/20/2022 1:34 PM

WALL ENGINEERING
PO BOX 1457, DURANT, OK 74702
OKLAHOMA CA #5413 EXP. JUNE 30, 2023

SUBMITTAL / REVISIONS:

DATE	BY	SUBMITTAL / REVISION
.	.	.

SHAWNEE MUNICIPAL AUTHORITY
WASTEWATER SYSTEM IMPROVEMENTS
SHAWNEE, OKLAHOMA

ELECTRICAL CABLE SCHEDULE

PROJECT NO.
SHN-20-01

DATE
06/22

DRAWN BY:
CD

CHECKED BY:
BB

REVIEWED BY:
BB

SCALE:
AS SHOWN

BAR IS ONE INCH ON ORIGINAL DRAWING
0" 1"
IF NOT ONE INCH ON THIS SHEET, ADJUST SCALES ACCORDINGLY

SHEET
ES8

REGISTERED PROFESSIONAL ENGINEER
BRUCE BROWN
20995
OKLAHOMA
6-01-2022

BROWN ENGINEERS
501-448-0100

CABLE SCHEDULE										
EQTP	EQNO	VOLTAGE_RATING	AMP_POLE	LOAD/CIRCUIT	PWR_ROUTE_TO	ENCLOSURE_RATING	DESCRIPTION_1	DIGITAL_CABLE	ANALOG_CABLE	I&C_ROUTE_TO
FIT	9023	120VAC-1P	20A/1P	50VA/1F20N	CB-9023	–	–	–	1ISP16/P-OS/1C	RTU-B
CB	9024	120VAC-1P	20A/1P	50VA/1F20N	IPC-2	–	–	–	–	–
FIT	9024	120VAC-1P	20A/1P	50VA/1F20N	CB-9024	–	–	–	1ISP16/P-OS/1C	RTU-B
RTU	A	120VAC-1P	20A/1P	1.5KVAVA/1F20N	CB-RTU_A	–	–	–	F01	NETWORK RACK NW1
RTU	B	120VAC-1P	20A/1P	1.5KVAVA/1F20N	CB-RTU_B	–	–	–	F02	NETWORK RACK NW1
REFER TO TB	BLOW	–	–	–	–	–	–	–	–	–
REFER TO TB	BLOW	–	–	–	–	–	–	–	–	–
CB	BLOW(A)	120VAC-1P	20A/1P	1.5KVA/1F20N	IPC-3	–	–	–	–	–
TB	BLOW(A)	–	–	–	–	–	–	–	F07	NETWORK NW1
TB	BLOW(A)	120VAC-1P	20A/1P	50VA/1F20N	CB-BLOW(A)	NEMA 4X	–	–	50ISP16/SP-OS/4C	VCP-1031
CB	BLOW(D1)	120VAC-1P	20A/1P	1.5KVA/1F20N	IPC-3	–	–	–	–	–
TB	BLOW(D1)	120VAC-1P	20A/1P	50VA/1F20N	CB-BLOW(D1)	NEMA 4X	–	50PR#14/P-OS/4C	–	VCP-1031
CB	BLOW(D2)	120VAC-1P	20A/1P	1.5KVA/1F20N	IPC-3	–	–	–	–	–
TB	BLOW(D2)	120VAC-1P	20A/1P	50VA/1F20N	CB-BLOW(D2)	NEMA 4X	–	50PR#14/P-OS/4C	–	VCP-1031
RTU	C	120VAC-1P	20A/1P	1.5KVAVA/1F20N	CB-RTU_C	–	–	–	F03	NETWORK RACK NW1
RTU	D	120VAC-1P	20A/1P	1.5KVAVA/1F20N	CB-RTU_D	–	–	–	F04	NETWORK RACK NW1
CB	DIG(A)	120VAC-1P	20A/1P	1.5KVA/1F20N	IPC-2	–	–	–	–	–
TB	DIG(A)	–	–	–	–	–	–	–	F06	NETWORK NW1
TB	DIG(A)	120VAC-1P	20A/1P	50VA/1F20N	CB-DIG(A)	NEMA 4X	–	–	24ISP16/SP-OS/4C	RTU-B
CB	DIG(D)	120VAC-1P	20A/1P	1.5KVA/1F20N	IPC-2	–	–	–	–	–
TB	DIG(D)	120VAC-1P	20A/1P	50VA/1F20N	CB-DIG(D)	NEMA 4X	–	24PR#14/P-OS/4C	–	RTU-B
RTU	E	120VAC-1P	20A/1P	1.5KVAVA/1F20N	CB-RTU_E	–	–	–	F05	NETWORK RACK NW1
CB	HSC	480VAC-3P	20A/3P	2.5KVA/F20	IPC-4	–	–	–	–	–
UV	HSC	480VAC-3P	20A/3P	2.5KVA/F20	CB-HSC	–	–	–	–	–
CB	RTU_A	120VAC-1P	20A/1P	1.5KVAVA/1F20N	IPC-1					
CB	RTU_B	120VAC-1P	20A/1P	1.5KVAVA/1F20N	IPC-2					
CB	RTU_C	120VAC-1P	20A/1P	1.5KVAVA/1F20N	IPC-4					
CB	RTU_D	120VAC-1P	20A/1P	1.5KVAVA/1F20N	IPC-5					
CB	RTU_E	120VAC-1P	20A/1P	1.5KVAVA/1F20N	IPC-6					
CB	SCC	120VAC-1P	20A/1P	1.5KVA/1F20N	IPC-4	–	–	–	–	–
UV	SCC	120VAC-1P	20A/1P	1.5KVA/1F20N	CB-SCC	–	–	–	–	–
REFER TO	TB-DIG	–	–	–	–	–	–	–	–	–

P:\PRODUCTION\PROJECTS\WALL ENGINEERING (WE)\WE-055 SHAWNEE NORTHSIDE WASTEWATER TREATMENT PLANT\DWG\ES9.DWG
5/20/2022 1:34 PM

WALL ENGINEERING
PO BOX 1457, DURANT, OK 74702
OKLAHOMA CA #5413 EXP. JUNE 30, 2023

SUBMITTAL / REVISIONS:

DATE	BY	SUBMITTAL / REVISION
.	.	.
.	.	.
.	.	.
.	.	.
.	.	.
.	.	.
.	.	.
.	.	.

SHAWNEE MUNICIPAL AUTHORITY
WASTEWATER SYSTEM IMPROVEMENTS
SHAWNEE, OKLAHOMA

ELECTRICAL CABLE SCHEDULE

PROJECT NO.
SHN-20-01

DATE
06/22

DRAWN BY:
CD

CHECKED BY:
BB

REVIEWED BY:
BB

SCALE:
AS SHOWN

BAR IS ONE INCH ON ORIGINAL DRAWING
0" 1"
IF NOT ONE INCH ON THIS SHEET, ADJUST SCALES ACCORDINGLY

SHEET
ES9

REGISTERED PROFESSIONAL ENGINEER
BRUCE BROWN
20995
06-01-2022
OKLAHOMA

BROWN ENGINEERS
501-448-0100

HVAC LEGEND

ABBREVIATION OR SYMBOL	DESCRIPTION
AHU	AIR HANDLING UNIT
AFF	ABOVE FINISHED FLOOR
AP	ACCESS PANEL
BHP	BRAKE HORSEPOWER
BTUH	BRITISH THERMAL UNIT PER HOUR
CFM	CUBIC FEET PER MINUTE
CRAC	COMPUTER ROOM AIR CONDITIONING UNIT
D	DRAIN
DB	DRY BULB TEMPERATURE
DN	DOWN
EA	EXHAUST AIR
EAT	ENTERING AIR TEMPERATURE OF THE COIL
ESP	EXTERNAL STATIC PRESSURE
EWT	ENTERING WATER TEMPERATURE
FCU	FAN COIL UNIT
FLR	FLOOR
FO	FLAT OVAL
FPM	FEET PER MINUTE (VELOCITY)
GPM	GALLONS PER MINUTE
HP	HORSEPOWER
KW	KILOWATT
LAT	LEAVING AIR TEMPERATURE OF THE COIL
LWT	LEAVING WATER TEMPERATURE
MAU	MAKE-UP AIR UNIT
MAX	MAXIMUM
MIN	MINIMUM
MHP	MOTOR HORSEPOWER
NTS	NOT TO SCALE
OSA	OUTSIDE AIR
PSI	POUNDS PER SQUARE INCH
RA	RETURN AIR
RH	RELATIVE HUMIDITY
RPM	REVOLUTION PER MINUTE
RTU	ROOF TOP (AIR CONDITIONING) UNIT
SA	SUPPLY AIR
SP	STATIC PRESSURE
TYP	TYPICAL
VAV	VARIABLE AIR VOLUME
WB	WET BULB TEMPERATURE
XFR	TRANSFER AIR
'	FEET
"	INCHES
ø	ROUND DUCT
Φ	OVAL DUCT

DETAIL/SECTION NUMBER

2 / M1.1

DETAIL/SECTION DESIGNATION

SHEET NUMBER

T VAV-2 S — THERMOSTAT OR SENSOR. (SUBSCRIPT DESIGNATES CONTROLLED EQUIPMENT)

2 — KEYED NOTE

ABBREVIATION OR SYMBOL	DESCRIPTION
	CEILING SUPPLY DIFFUSER
	CEILING RETURN/EXHAUST GRILLE
	GRILLE OR REGISTER ON BOTTOM OF DUCTWORK
18/12 SA	SIDEWALL SUPPLY (RETURN SIMILAR)
18/12	RECTANGULAR DUCT WITH DUCT SIZE TAG
20ø	ROUND DUCT WITH DUCT SIZE TAG
20/14Φ	OVAL DUCT WITH DUCT SIZE TAG
24/24 SA	SUPPLY DUCT UP
24/24 SA	SUPPLY DUCT DOWN
24/24 RA	RETURN DUCT UP
24/24 RA	RETURN DUCT DOWN
24/24 EA	EXHAUST DUCT UP
24/24 EA	EXHAUST DUCT DOWN
18/18Φ 24/12	RECTANGULAR/OVAL TRANSITION
18ø 24/12	RECTANGULAR/ROUND TRANSITION
	FLEXIBLE DUCT CONNECTION
F(1) M(3) S(2) C(4)	(1) FIRE DAMPER (2) SMOKE DAMPER (3) MOTORIZED DAMPER (4) CONTROL DAMPER
(1) SD (2)	(1) BALANCING DAMPER (2) SMOKE DETECTOR
250	BALANCING DAMPER, SET TO INDICATED CFM

ABBREVIATION OR SYMBOL	DESCRIPTION
	NEW EQUIPMENT
	EXISTING EQUIPMENT TO REMAIN
	EXISTING EQUIPMENT TO BE REMOVED
	NEW DUCT
	EXISTING DUCT TO REMAIN
	DEMOLISH EXISTING DUCT BACK TO POINT.
	CONNECT TO EXISTING DUCT.

C/350 — AIR DEVICE DESIGNATION

AIR DEVICE "MARK" — AIRFLOW CFM

* NOT ALL SYMBOLS MAY APPLY TO THIS PROJECT

MECHANICAL GENERAL NOTES

1. ALL MECHANICAL WORK SHALL COMPLY WITH ALL LOCAL CODES, DRAWINGS, SPECIFICATIONS, AND AUTHORITIES HAVING JURISDICTION. IF DISCREPANCIES ARE FOUND, THE MOST STRINGENT REQUIREMENT SHALL GOVERN WORK. WHERE INSPECTIONS ARE REQUIRED BY AUTHORITIES HAVING JURISDICTION, WORK MUST NOT BE CONCEALED UNTIL INSPECTIONS AND TESTING ARE COMPLETE AND WORK IS ACCEPTED.
2. REFER TO SPECIFICATIONS AND PROJECT MANUAL FOR ADDITIONAL INFORMATION AND REQUIREMENTS.
3. REFER TO ALL PROJECT DRAWINGS FOR DETAILS OF CONSTRUCTION AND INSTALLATION REQUIREMENTS.
4. PRIOR TO BID, CONTRACTOR SHALL BECOME THOROUGHLY FAMILIAR WITH THE REQUIREMENTS OF THESE NOTES AS WELL AS OTHER NOTES SHOWN ON THE CONTRACT DOCUMENTS.
5. THESE DRAWINGS REFLECT A SYSTEM DESIGNED AROUND SPECIFIED REFERENCE PRODUCTS. THE SELECTION OF WHICH HAS INFLUENCED THE DESIGNS OF OTHER TRADES. IF SUBSTITUTE MANUFACTURERS, SIZES, OR MODEL NUMBERS ARE BID OR SUBMITTED, IT IS THE RESPONSIBILITY OF THE CONTRACTOR TO COORDINATE ALL DIFFERENCES PRIOR TO BID. ALL COSTS OF ALL TRADES ASSOCIATED WITH THE SUBSTITUTION SHALL BE INCLUDED IN THE BID
6. COORDINATION OF ALL MODIFICATIONS TO EACH DISCIPLINE WHICH RESULT FROM SUBSTITUTION OF EQUIPMENT OR MATERIALS SHALL BE THE RESPONSIBILITY OF THE CONTRACTOR. SUBSTITUTIONS WHICH ARE INSTALLED AND SUBSEQUENTLY ARE PROVEN UNSATISFACTORY BY OWNER, SHALL BE REMOVED COMPLETELY BY THE CONTRACTOR AND REPLACED WITH THE ORIGINAL DESIGN OR CORRECTED AS DIRECTED BY THE ENGINEER WITHOUT ADDITIONAL COST TO THE OWNER.
7. ALL DRAWINGS ARE DIAGRAMMATIC AND INDICATE THE GENERAL ARRANGEMENTS OR GEOMETRICAL RELATIONSHIPS OF EQUIPMENT AND SERVICES. THEY ARE NOT INTENDED TO SPECIFY OR SHOW EVERY OFFSET, SEQUENCE, DEVICE, OPTION, FITTING, OR COMPONENT.
8. INFORMATION AND COMPONENTS ON DETAILS OR IN SPECIFICATIONS, BUT NOT SHOWN ON PLANS, AND VICE VERSA, SHALL BE PROVIDED AS IF EXPRESSLY REQUIRED BY BOTH.
9. CONTRACTOR SHALL NOT SCALE DRAWINGS. DRAWINGS SPECIFIC TO THIS DISCIPLINE DO NOT LIMIT THE RESPONSIBILITY OF WORK REQUIRED BY THE CONTRACT DOCUMENTS.
10. EXACT LOCATIONS OF ALL EQUIPMENT, ROOF CURBS, DUCTS, DIFFUSERS, AND PIPING SHALL BE COORDINATED WITH OTHER TRADES. CEILING MOUNTED SPRINKLER, LIGHTING, AND ELECTRICAL REQUIREMENTS TAKE PRECEDENCE OVER CEILING MOUNTED MECHANICAL REQUIREMENTS. SEE ARCHITECTURAL REFLECTED CEILING PLANS FOR CEILING GRID AND LIGHTING LAYOUT FOR COORDINATION OF FINAL DIFFUSER LOCATIC NS.
11. SEE ARCHITECTURAL AND STRUCTURAL DRAWINGS FOR BUILDING DETAILS AND DIMENSIONS. COORDINATE PLACEMENT OF MECHANICAL SYSTEMS WITH ARCHITECTURAL AND STRUCTURAL TRADES.
12. CONTRACTOR SHALL BE RESPONSIBLE FOR COORDINATING ALL WORK WITH THAT OF OTHER TRADES. REFER TO ALL CONSTRUCTION DOCUMENTS FOR COMPLETE INFORMATION PRIOR TO BID.
13. ALL MECHANICAL CONSTRUCTION DETAILS SHALL BE AS SHOWN AND AS REQUIRED TO MAINTAIN "UL" ASSEMBLY RATINGS AS SHOWN ON ARCHITECTURAL SHEETS. SEAL AROUND ALL PENETRATIONS THOROUGH UL RATED ASSEMBLIES, FIRE AND SMOKE WALLS. COORDINATE WITH GENERAL CONTRACTOR.
14. NO OTHER TRADES, I.E., ELECTRICAL, CEILING, PLUMBING, OR OTHER SYSTEMS SHALL BE SUSPENDED, HUNG, OR SUPPORTED FROM DUCTWORK OR PIPING.
15. SPECIAL CARE SHALL BE TAKEN O|EXISTING |ROOFS TO PREVENT DAMAGE. ANY DAMAGE SHALL BE PROMPTLY REPAIRED AT NO EXPENSE TO THE OWNER. COMPLY WITH BONDING REQUIREMENTS O|EXISTING |ROOF.
16. CONTRACTOR SHALL BE RESPONSIBLE FOR FLASHING AND SEALING OF ALL ROOF PENETRATIONS AIR AND WATER TIGHT.
17. CLOSELY COORDINATE FINAL LOCATIONS OF INSTALLED EQUIPMENT TO ACHIEVE THE GREATEST ACCESSIBILITY FOR MAINTENANCE PURPOSES.
18. CONTRATCTOR SHALL VISIT THE SITE TO ESTABLISH THE EXISTING CONDITIONS PRIOR TO DUCT, PIPE OR EQUIPMENT FABRICATION. SYSTEMS SHALL BE ERECTED USING FIELD MEASUREMENTS FOR COORDINATION WITH THE EXISTING EQUIPMENT, STRUCTURE, FIRE PROTECTION AND ELECTRICAL IN THE SPACE.
19. MAINTAIN THE SECURITY OF THE BUILDING AT ALL TIMES.
20. CORE DRILL ALL PIPING PENETRATIONS OF CONCRETE WALLS AND FLOORS.
21. ALL HVAC WORK TO BE PER SMACNA AND ALL APPLICABLE CODES. DUCT SIZES REPRESENT FREE AREA.
22. ALL LOW PRESSURE DUCTWORK THAT HAS TO BE OFFSET DUE TO AN OBSTRUCTION SHALL BE OFFSET WITH TWO - 45 DEGREE, 1.5 RADIUS ELBOWS UNLESS OTHERWISE NOTED.
23. PROVIDE ACCESS DOORS IN WALLS, FLOORS, OR CEILINGS FOR ACCESS TO ALL FIRE DAMPERS, SMOKE DAMPERS, EQUIPMENT, COILS, VALVES, AND BALANCING DAMPERS. ACCESS DOORS ARE NOT REQUIRED WHERE DEVICES ARE DIRECTLY ACCESSIBLE THROUGH AIR DEVICES.
24. ALL DUCTWORK UPSTREAM OF VAV BOXES SHALL BE CONSIDERED "MEDIUM-PRESSURE DUCT".
25. DUCT FITTINGS ARE AS FOLLOWS: 1) FLEX DUCT IS ONLY PERMITTED IN LINEAR DUCT RUNS. FLEX DUCT SHALL NOT BE USED WHERE DUCTWORK CHANGES DIRECTION. ALL ELBOWS SHALL BE HARD DUCTED. 2) ALL 90 DEGREE ELBOWS TO HAVE R/D = 1.5, UNLESS OTHERWISE NOTED. 3) ALL MITERED RECTANGULAR ELBOWS GREATER THAN 90 DEGREES NOTED ARE TO HAVE TURNING VANES. 4) SIDE TAKE-OFF FITTINGS SHALL BE EQUAL TO FLEXMASTER STODB03. 5) DAMPERS SHALL BE EQUAL TO FLEXMASTER SLDB03
26. PROVIDE BRANCH TAKEOFF AND DAMPER AT EACH CONNECTION OF ROUND OR RECTANGULAR BRANCH DUCTS TO A RECTANGULAR DUCT, SEE DETAILS.
27. REFER TO ARCHITECTURAL PLANS FOR LOCATION OF FIRE AND SMOKE WALLS.
28. MAINTAIN A MINIMUM OF 10'-0" BETWEEN ALL FRESH AIR INTAKES AND PLUMBING VENTS, EXHAUST FAN DISCHARGE, AND FLUES. MAINTAIN MINIMUM CLEAR DISTANCE OF 5'0" BETWEEN PARAPET WALL AND ALL ROOF MOUNTED MECHANICAL EQUIPMENT.
29. ALL ROOF MOUNTED EQUIPMENT SHALL BE PROVIDED WITH MANUFACTURER'S FABRICATED CURBS WHICH FACILITATE LEVEL MOUNTING OF THE EQUIPMENT (I.E. FACTORY FABRICATED TO COMPENSATE FOR ROOF SLOPE). OBTAIN ROOF SLOPES AND DIRECTION OF SLOPE FROM ARCHITECTURAL AND/OR STRUCTURAL PLANS. ALL ROOF CURBS SHALL BE A MINIMUM OF 8" HIGH. SHIMMING OF CURBS IS NOT ACCEPTABLE.
30. ROOF PENETRATIONS AND FLASHING OR SEALING MUST COMPLY WITH ROOF MANUFACTUF S RECCOMMENDATIONS AND WARRANTY REQUIREMENTS.
31. ALL DUCTS SHALL BE MOUNTED HIGH AS POSSIBLE AGAINST BOTTOM OF STRUCTURE EXCEPT AS REQUIRED TO AVOID CONFLICTS WITH INTERSECTING SYSTEMS. DIAGONALLY OFFSET DUCTS IMMEDIATELY BEFORE AND AFTER PASSING UNDER INTERSECTING SYSTEMS TO MAINTAIN DUCT TIGHT TO STRUCTURE.
32. CONTRACTOR SHALL FIELD VERIFY ALL PIPE ROUTING AND ADJUST ELEVATIONS AS REQUIRED TO AVOID CONFLICTS. FINAL PLACEMENT OF PIPING SHALL BE DETERMINED BY FIELD MEASUREMENT AND VERIFICATION. ELEVATIONS ARE REFERENCED TO PIPE CENTERLINE UNLESS OTHERWISE NOTED.
33. DUCTWORK SHALL CONFORM TO THE FOLLOWING PRESSURE CLASSES: SUPPLY: 2" SP; RETURN/RELIEF/OUTSIDE AIR/EXHAUST: 2" SP. ALL DUCTWORK IS REQUIRED TO BE TESTED IN ACCORDANCE WITH THE SPECIFICATIONS.
34. ALL EQUIPMENT, DEVICES, AND FIXTURES SHALL BE INSTALLED AS PER MANUFACTURER'S RECOMMENDATION.
35. CONTRACTOR SHALL VERIFY CLOSELY AT SITE TRANSPORTATION OF NEW HVAC EQUIPMENT INTO MECHANICAL AREAS BEFORE BIDDING. PROVIDE COMPLETE DISASSEMBLY AND RE-ASSEMBLY OF NEW EQUIPMENT AS REQUIRED FOR A COMPLETE INSTALLATION.
36. PROVIDE FLEXIBLE CONNECTIONS AND TRANSITIONS ON DUCT INLET AND OUTLET CONNECTIONS TO ALL EQUIPMENT WITH MOVING PARTS.
37. DUCTWORK VISIBLE THROUGH RETURN AIR OPENINGS SHALL BE PAINTED FLAT BLACK TO REDUCE VISIBILITY.
38. EXPOSED DUCTWORK AND PIPING SHALL BE FURNISHED SUITABLE FOR PAINTING, AND SHALL BE PAINTED AS REQUIRED BY ARCHITECTURAL SPECIFICATIONS.
39. NOT ALL REQUIRED PIPING, VALVES, OR FITTINGS ARE SHOWN ON DRAWINGS FOR CLARITY. COORDINATE PLAN DETAILS WITH SPECIFICATIONS, SCHEMATICS, FLOW DIAGRAMS, AND OTHER DETAILS TO PROVIDE COMPLETE PIPING SYSTEMS.
40. COORDINATE WORK CLOSELY WITH CONTROL REQUIREMENTS. PROVIDE ALL NECESSARY DUCT TAPS, PIPE TAPS, WELLS, AND OTHER APPURTENANCES REQUIRED BY CONTROL SYSTEM. PROVIDE SPARE PIPE WELL ADJACENT TO EACH TEMPERATURE SENSOR IN PIPING.
41. REFER TO ARCHITECTURAL PLANS FOR CEILING TYPE, AND FOR MOUNTING REQUIREMENTS. CONTRACTOR SHALL PROVIDE AND INSTALL ALL AIR DEVICES WITH MOUNTING SYSTEM DESIGNED FOR MOUNTING SURFACE TYPE.
42. COORDINATE FINAL PLACEMENT OF ALL THERMOSTATS WITH WALL-MOUNTED DEVICES AND OWN S REPRESENTATIVE. MOUNT PER A.D.A. REQUIREMENTS. ANY THERMOSTAT THAT IS REQUIRED TO BE MOUNTED ON AN EXTERIOR WALL SHALL BE MOUNTED ON AN INSULATED PAD.
43. INSTALL SMOKE DETECTOR IN SUPPLY AND RETURN DUCT OF ALL AIR HANDLERS SUPPLYING GREATER THAN 2,000 CFM.
44. PROVIDE CONCRETE PADS FOR ALL GROUND MOUNTED EQUIPMENT.
45. REPLACE ALL ARCHITECTURAL FEATURES REMOVED OR DAMAGED DURING THE COURSE OF THE WORK.
46. CONTRACTOR SHALL PATCH ALL WALLS, FLOORS, AND CEILINGS TO MATCH NEW FOR ALL OPENINGS CREATED BY INSTALLATION OF EQUIPMENT AND HVAC SERVICE PENETRATIONS.
47. ALL SUPPLY, RETURN, RELIEF, AND OUTSIDE AIR DUCTWORK SHALL BE EXTERNALLY INSULATED EXCEPT WHERE LINER, DOUBLE WALL LINED DUCT, OR FABRIC DUCT IS INDICATED. INSULATE TOPS OF SUPPLY AIR DIFFUSERS WITI' THICK FIBERGLASS DUCT WRAP. DO NOT INSULATE EXHAUST DUCTWORK EXCEPT FOR FIRE WRAP ON KITCHEN HOOD EXHAUST AND ON EXHAUST ASSOCIATED WITH DEDICATED OUTSIDE AIR UNITS (DOAS).
48. REFER TO SPECIFICATONS FOR INSULATION AND R-VALUES FOR MECHANICAL PIPING AND DUCTWORK INSULATION.
49. SEE ARCHITECTURAL PLANS FOR ROOF PENETRATION DETAILS.
50. ALL HVAC COMPONENTS WITH ELECTRICAL REQUIREMENTS SHALL BE INSTALLED WITH ELECTRICAL INFRASTRUCTURE NECESSARY TO PROVIDE A FULLY FUNCTIONING SYSTEM. IF NOT SPECIFICALLY SHOWN ON ELECTRICAL SCHEDULE, HVAC FIXTURES REQUIRING ELECTRICAL SERVICE SHALL BE FED FROM BREAKER OF ADEQUATE CAPACITY.
51. ALL CONTROL WIRING SHALL BE INSTALLED IN CONDUIT.
52. PLENUM CABLING SHALL HAVE ITS OWN SYSTEM OF SUPPORT AND BE STRUCTURALLY SOUND. ATTACHMENT TO CEILING GRID AND HANGER WIRES IS PROHIBITED. WHERE NOT INSTALLED IN CONDUIT, CABLING SHALL BE RUN IN CABLE HOOKS. CABLING LAYING ON CEILING TILES IS PROHIBITED.
53. CONTRACTOR SHALL PROVIDE FURR DOWN AND ANY OTHER CEILING MODIFICATIONS NEEDED TO ACCOMMODATE DUCTWORK PENETRATIONS.
54. PROVIDE ALL HVAC UNITS WITH AN EXTRA SET OF MANUFACTURI S RECOMMENDED FILTERS AFTER PROJECT COMPLETION.
55.

WALL ENGINEERING
PO BOX 1457, DURANT, OK 74702
OKLAHOMA CA #5413 EXP. JUNE 30, 2023

SUBMITTAL / REVISIONS:

DATE	BY	SUBMITTAL / REVISION
-	-	-

SHAWNEE MUNICIPAL AUTHORITY
WASTEWATER SYSTEM IMPROVEMENTS
SHAWNEE, OKLAHOMA

HVAC
LEGEND AND NOTES

PROJECT NO.
SHN–20–01

DATE
06/22

DRAWN BY:
CD

CHECKED BY:
BB

REVIEWED BY:
BB

SCALE:
AS SHOWN

BAR IS ONE INCH ON ORIGINAL DRAWING
0" 1"
IF NOT ONE INCH ON THIS SHEET, ADJUST SCALES ACCORDINGLY

SHEET
M1

LICENSED PROFESSIONAL ENGINEER
MELANIE C. RICHARDSON
No. 21821
OKLAHOMA

BROWN ENGINEERS
501-448-0100

P:\PRODUCTION\PROJECTS\WALL ENGINEERING (WE)\WE-055 SHAWNEE NORTHSIDE WASTEWATER TREATMENT PLANT\DWG\M1.DWG
5/20/2022 1:37 PM

HVAC THERMOSTAT SETTINGS:

ALL THERMOSTATS WHICH ARE NOT UNIT–MOUNTED SHALL BE AT APPROXIMATELY 44" PER ADA REQUIREMENTS. SET ALL THERMOSTATS ASSOCIATED WITH HVAC EQUIPMENT PER THE FOLLOWING:

1. EXHAUST FANS WEF–1,2,3 : FAN SHALL ENERGIZE AT 85°F AND DE–ENERGIZE AT 80°F (ADJUSTABLE).
2. UNIT HEATERS EUH–1 THROUGH 12 , WEUH–1,2,3,4 : UNIT HEATER SHALL ENERGIZE AT 55°F AND DE–ENERGIZE AT 60°F (ADJUSTABLE).
3. SPLIT SYSTEM AIR HANDLERS AHU–1,2 : A. COOLING MODE: SETPOINT SHALL BE 75°F (ADJUSTABLE) B. HEATING MODE: SETPOINT SHALL BE 72°F (ADJUSTABLE) C. AHU–1 AND AHU–2 SHALL HAVE THE SAME HEATING AND COOLING SETPOINTS.
4. SPLIT SYSTEM AIR HANDLER AHU–3 : A. COOLING MODE: SETPOINT SHALL BE 80°F (ADJUSTABLE) B. HEATING MODE: SETPOINT SHALL BE 65°F (ADJUSTABLE)

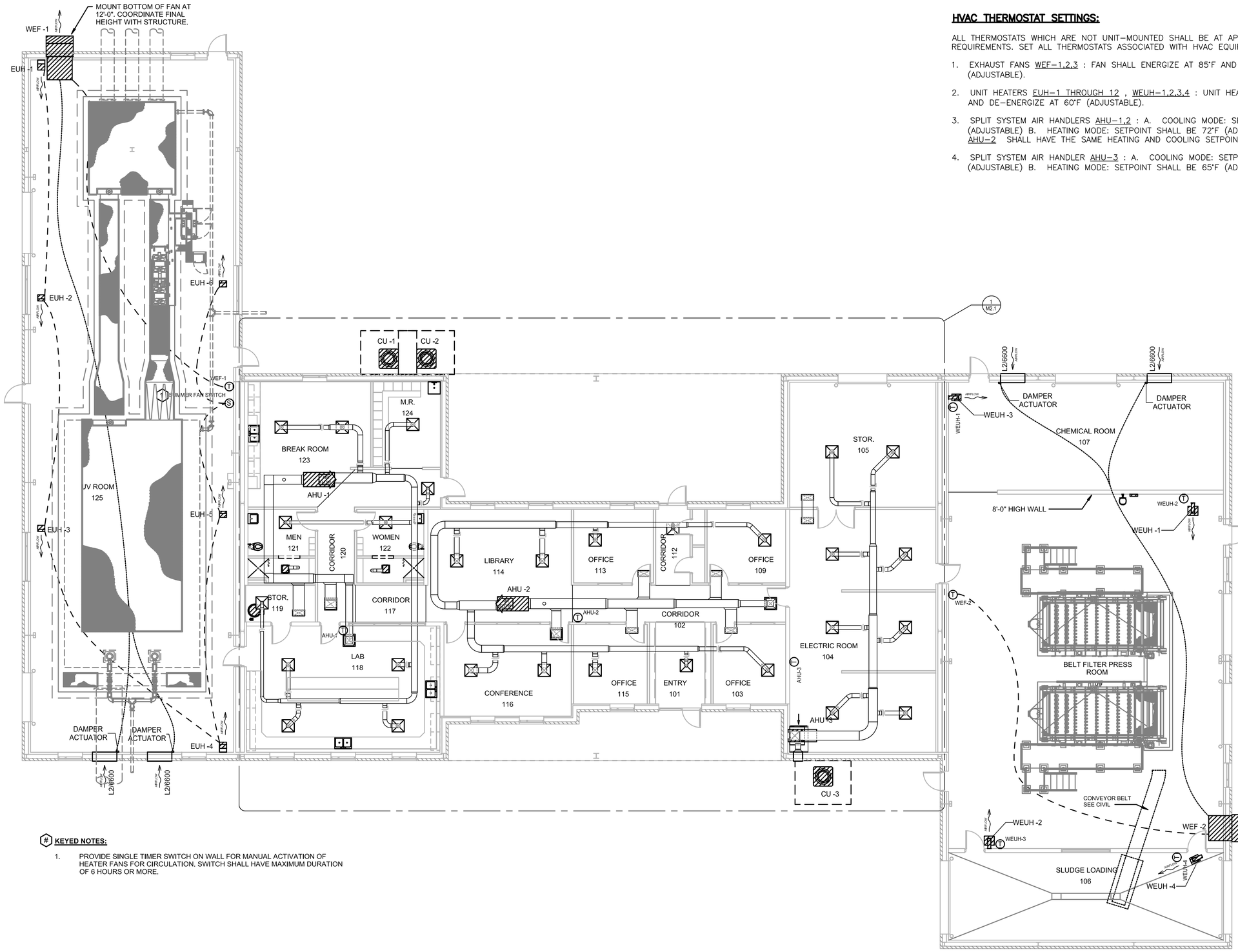

KEYED NOTES:

1. PROVIDE SINGLE TIMER SWITCH ON WALL FOR MANUAL ACTIVATION OF HEATER FANS FOR CIRCULATION. SWITCH SHALL HAVE MAXIMUM DURATION OF 6 HOURS OR MORE.

WALL ENGINEERING
PO BOX 1457, DURANT, OK 74702
OKLAHOMA CA #5413 EXP. JUNE 30, 2023

SUBMITTAL / REVISIONS:

DATE	BY	SUBMITTAL / REVISION

SHAWNEE MUNICIPAL AUTHORITY
WASTEWATER SYSTEM IMPROVEMENTS
SHAWNEE, OKLAHOMA

MECHANICAL PLAN – OVERALL

PROJECT NO.	SHN–20–01
DATE	06/22
DRAWN BY:	CD
CHECKED BY:	BB
REVIEWED BY:	BB
SCALE:	AS SHOWN

BAR IS ONE INCH ON ORIGINAL DRAWING
0" 1"
IF NOT ONE INCH ON THIS SHEET, ADJUST SCALES ACCORDINGLY

SHEET
M2

REGISTERED PROFESSIONAL ENGINEER
MELANIE C. RICHARDSON
No. 31720
OKLAHOMA
5-17-22
BROWN ENGINEERS
501-448-0100

P:\PRODUCTION\PROJECTS\WALL ENGINEERING (WE)\WE–055 SHAWNEE NORTHSIDE WASTEWATER TREATMENT PLANT\DWG\M2.DWG
5/20/2022 1:39 PM

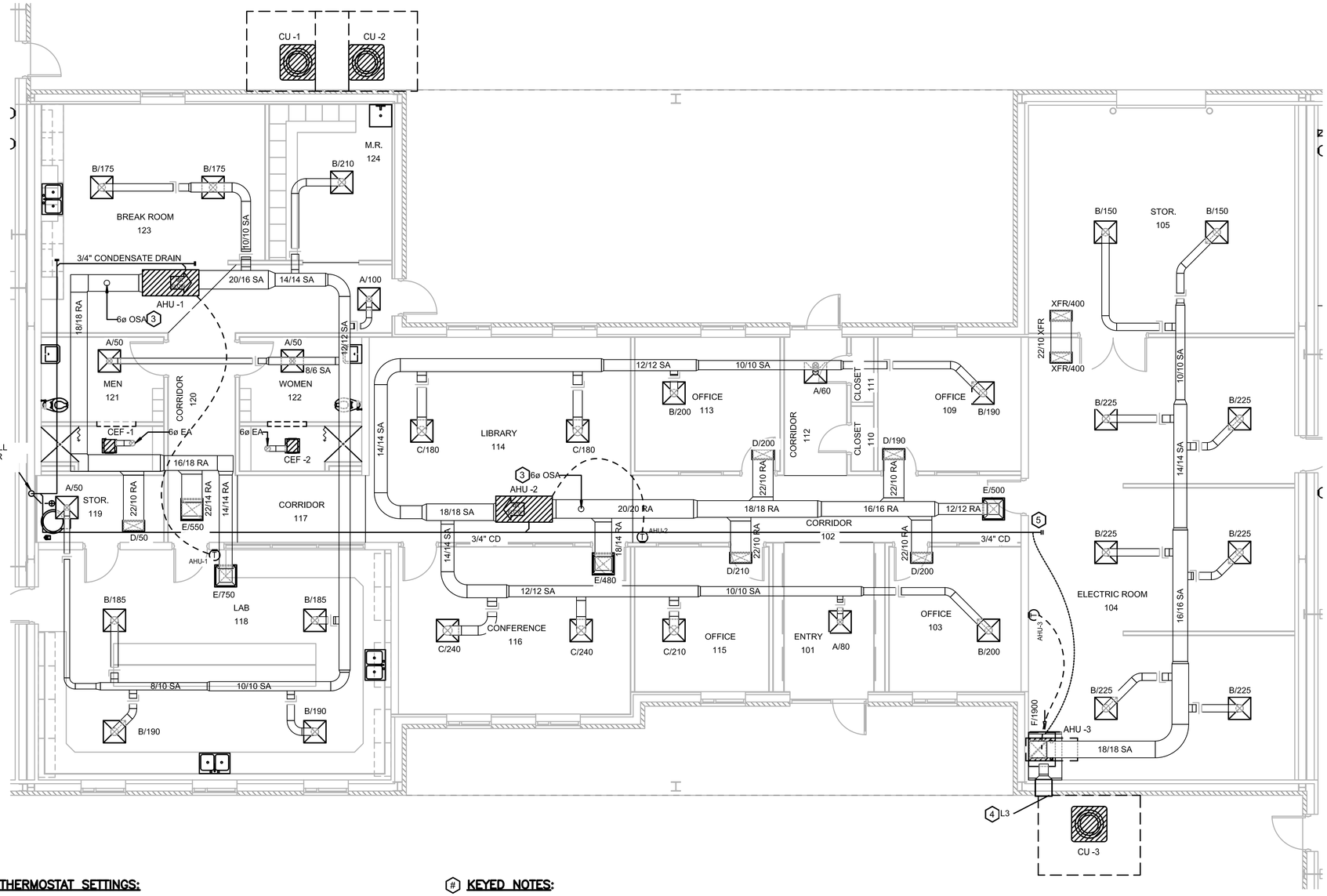

HVAC THERMOSTAT SETTINGS:

ALL THERMOSTATS WHICH ARE NOT UNIT–MOUNTED SHALL BE AT APPROXIMATELY 44" PER ADA REQUIREMENTS. SET ALL THERMOSTATS ASSOCIATED WITH HVAC EQUIPMENT PER THE FOLLOWING:

1. EXHAUST FANS WEF–1,2,3 : FAN SHALL ENERGIZE AT 85°F AND DE–ENERGIZE AT 80°F (ADJUSTABLE).
2. UNIT HEATER SHALL ENERGIZE AT 55°F AND DE–2. UNIT HEATERS EUH–1 THROUGH 12 , WEUH–1,2,3,4 ENERGIZE AT 60°F (ADJUSTABLE).
3. SPLIT SYSTEM AIR HANDLERS AHU–1,2
   A. COOLING MODE: SETPOINT SHALL BE 75°F (ADJUSTABLE)
   B. HEATING MODE: SETPOINT SHALL BE 72°F (ADJUSTABLE)
   C. AHU–1 AND AHU–2 SHALL HAVE THE SAME HEATING AND COOLING SETPOINTS. AHU–3
4. SPLIT SYSTEM AIR HANDLER
   A. COOLING MODE: SETPOINT SHALL BE 80°F (ADJUSTABLE)
   B. HEATING MODE: SETPOINT SHALL BE 65°F (ADJUSTABLE)

(#) KEYED NOTES:

1. EXHAUST FAN SHALL BE SWITCHED WITH RESTROOM LIGHTS.
2. ROUTE EXHAUST UP TO ROOF JACK DISCHARGE.
3. ROUTE 6" OUTSIDE AIR INTAKE UP TO ROOF JACK INTAKE. PROVIDE BALANCING DAMPER AND BALANCE TO OSA CFM AS SHOWN ON MECHANICAL SCHEDULES.
4. OUTSIDE AIR INTAKE LOUVER. PROVIDE BALANCING DAMPER IN DUCT AND BALANCE TO OSA CFM AS SHOWN ON MECHANICAL SCHEDULES. MOUNT LOUVER AT 10'–0" ABOVE FINISH FLOOR, COORDINATE FINAL ELEVATION WITH STRUCTURE.
5. PROVIDE AHU–3 WITH CONDENSATE PUMP EQUAL TO LIBERTY AND PUMP CONDENSATE TO GRAVITY DRAIN LINE ABOVE CEILING.

HVAC -- BRANCH DUCT CONNECTION SIZES

***Note: For Rectangular Ducts, shortest dimension reflects depth unless otherwise noted on plans.*

DESIGNATION	INLET Ø	INLET HT.	INLET W.
A	6"		
B	8"		
C	10"		
D		10"	22"
E		22"	22"
F		18"	30"
XFR		10"	22"

WALL ENGINEERING
PO BOX 1457, DURANT, OK 74702
OKLAHOMA CA #5413 EXP. JUNE 30, 2023

SUBMITTAL / REVISIONS:

DATE	BY	SUBMITTAL / REVISION
.	.	.
.	.	.
.	.	.
.	.	.
.	.	.
.	.	.
.	.	.

SHAWNEE MUNICIPAL AUTHORITY
WASTEWATER SYSTEM IMPROVEMENTS
SHAWNEE, OKLAHOMA

MECHANICAL PLAN – ADMIN

PROJECT NO.
SHN–20–01
DATE
06/22
DRAWN BY:
CD
CHECKED BY:
BB
REVIEWED BY:
BB
SCALE:
AS SHOWN

BAR IS ONE INCH ON ORIGINAL DRAWING
0" 1"
IF NOT ONE INCH ON THIS SHEET, ADJUST SCALES ACCORDINGLY

SHEET
M3

MELANIE C. RICHARDSON
No. 21821
OKLAHOMA
BROWN ENGINEERS
501-448-0100

P:\PRODUCTION\PROJECTS\WALL ENGINEERING (WE)\WE–055 SHAWNEE NORTHSIDE WASTEWATER TREATMENT PLANT\DWG\M3.DWG
5/20/2022 1:40 PM

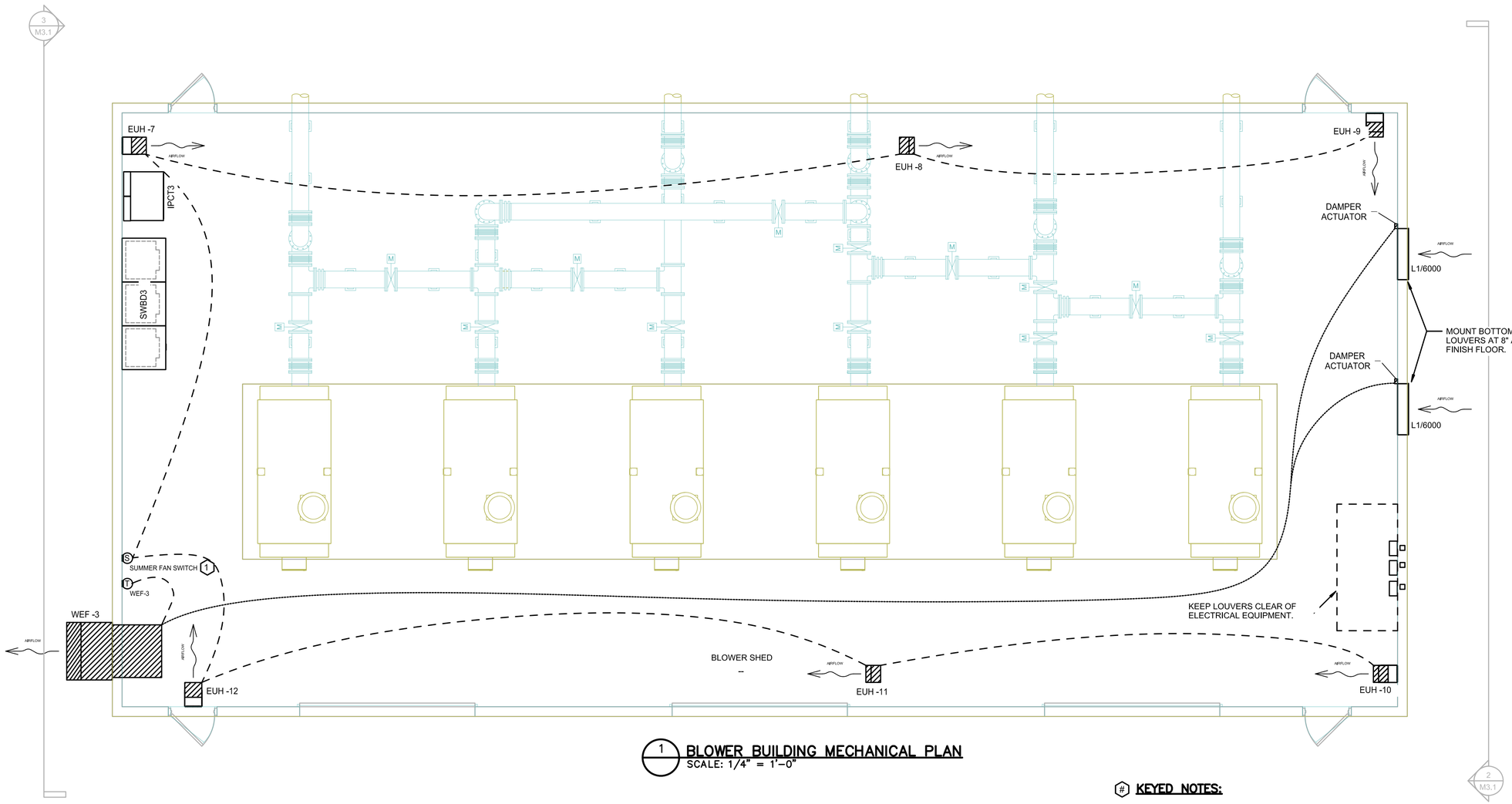

1 BLOWER BUILDING MECHANICAL PLAN
SCALE: 1/4" = 1'-0"

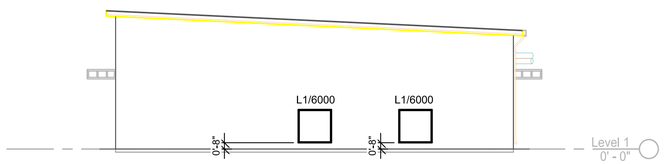

2 BLOWER BUILDING EAST
SCALE: 1/8" = 1'-0"

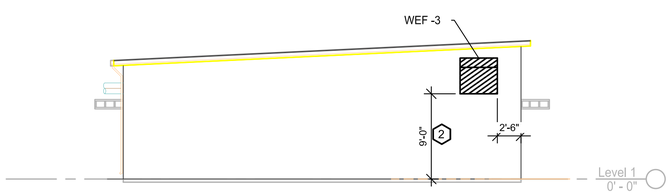

3 BLOWER BUILDING WEST
SCALE: 1/8" = 1'-0"

KEYED NOTES:

1. PROVIDE SINGLE TIMER SWITCH ON WALL FOR MANUAL ACTIVATION OF HEATER FANS FOR CIRCULATION. SWITCH SHALL HAVE MAXIMUM DURATION OF 6 HOURS OR MORE.
2. COORDINATE FINAL EXHAUST FAN HEIGHT WITH STRUCTURE.

HVAC THERMOSTAT SETTINGS:

1. ALL THERMOSTATS WHICH ARE NOT UNIT-MOUNTED SHALL BE AT APPROXIMATELY 44" PER ADA REQUIREMENTS. SET ALL THERMOSTATS ASSOCIATED WITH HVAC EQUIPMENT PER THE FOLLOWING:
2. EXHAUST FANS WEF-1,2,3 : FAN SHALL ENERGIZE AT 85°F AND DE-ENERGIZE AT 80°F (ADJUSTABLE).
3. UNIT HEATER SHALL ENERGIZE AT 55°F AND DE-2. UNIT HEATERS EUH-1 THROUGH 12 , WEUH-1,2,3,4 ENERGIZE AT 60°F (ADJUSTABLE).
4. SPLIT SYSTEM AIR HANDLERS AHU-1,2
   A. COOLING MODE: SETPOINT SHALL BE 75°F (ADJUSTABLE)
   B. HEATING MODE: SETPOINT SHALL BE 72°F (ADJUSTABLE)
   C. AHU-1 AND AHU-2 SHALL HAVE THE SAME HEATING AND COOLING SETPOINTS. AHU-3
5. SPLIT SYSTEM AIR HANDLER
   A. COOLING MODE: SETPOINT SHALL BE 80°F (ADJUSTABLE)
   B. HEATING MODE: SETPOINT SHALL BE 65°F (ADJUSTABLE)

LICENSED PROFESSIONAL ENGINEER
MELANIE C. RICHARDSON
No. 31734
OKLAHOMA

BROWN ENGINEERS
501-448-0100

WALL ENGINEERING
PO BOX 1457, DURANT, OK 74702
OKLAHOMA CA #5413 EXP. JUNE 30, 2023

SUBMITTAL / REVISIONS:

DATE	BY	SUBMITTAL / REVISION

SHAWNEE MUNICIPAL AUTHORITY
WASTEWATER SYSTEM IMPROVEMENTS
SHAWNEE, OKLAHOMA

MECHANICAL
BLOWER BUILDING MECHANICAL PLAN

PROJECT NO. SHN-20-01
DATE 06/22
DRAWN BY: CD
CHECKED BY: BB
REVIEWED BY: BB
SCALE: AS SHOWN

BAR IS ONE INCH ON ORIGINAL DRAWING
0' 1'
IF NOT ONE INCH ON THIS SHEET, ADJUST SCALES ACCORDINGLY

SHEET
M4

P:\PRODUCTION\PROJECTS\WALL ENGINEERING (WE)\WE-055 SHAWNEE NORTHSIDE WASTEWATER TREATMENT PLANT\DWG\M4.DWG
5/20/2022 1:41 PM

HVAC -- AIR TERMINAL SCHEDULE

MARK	MANUFACTURER	MODEL	DESCRIPTION	AIRFLOW DATA	INLET SIZE		FACE SIZE		MAX. NOISE CRITERIA	OPTIONS				
				MAX FLOW	DIAMETER	WIDTH	LENGTH	W	L	FACE STYLE	FINISH	DAMPER STYLE	MATERIAL	MOUNTING
A	TITUS	OMNI AA-06-1-24x24-26	ALUMINUM SQUARE PLAQUE DIFFUSER	215 CFM	6	[redacted]		24"	24"	25	PLAQUE	WHITE	OPPOSED BLADE	ALUMINUM	LAY-IN CEILING
B	TITUS	OMNI AA-08-1-24x24-26	ALUMINUM SQUARE PLAQUE DIFFUSER	350 CFM	8			24"	24"	25	PLAQUE	WHITE	OPPOSED BLADE	ALUMINUM	LAY-IN CEILING
C	TITUS	OMNI AA-10-1-24x24-26	ALUMINUM SQUARE PLAQUE DIFFUSER	505 CFM	10			24"	24"	25	PLAQUE	WHITE	OPPOSED BLADE	ALUMINUM	LAY-IN CEILING
D	TITUS	50F	EGGCRATE RETURN GRILLE	960 CFM	[redacted]	22"	10"	24"	12"	25	EGGCRATE	WHITE	OPPOSED BLADE	ALUMINUM	LAY-IN CEILING
E	TITUS	50F	EGGCRATE RETURN GRILLE	2,200 CFM		22"	22"	24"	24"	25	EGGCRATE	WHITE	OPPOSED BLADE	ALUMINUM	LAY-IN CEILING
F	TITUS	350FL	35° DEFLECTION SIDEWALL RETURN GRILLE	1,900 CFM		30"	18"	32"	20"	25	HORIZONTAL DEFLECTION BLADES	WHITE	OPPOSED BLADE	ALUMINUM	LAY-IN CEILING
XFR	TITUS	50F	EGGCRATE TRANSFER GRILLE	960 CFM		22"	10"	24"	12"	25	EGGCRATE	WHITE	OPPOSED BLADE	ALUMINUM	LAY-IN CEILING

1 CONTRACTOR SHALL PROVIDE ALL AIR DISTRIBUTION DEVICES WITH MANUFACTURER'S MOUNTING SYSTEM FOR CEILINGS ON WHICH DEVICE SHALL BE MOUNTED.
2 CONTRACTOR SHALL SUBMIT MANUFACTURER'S COLOR OPTIONS TO ARCHITECT BEFORE ORDERING AIR DISTRIBUTION DEVICES.

HVAC -- AHU - INDOOR SCHEDULE

DESIGNATION		DESCRIPTION	MANUFACTURER	MODEL	AIRFLOW DATA			COOLING DATA	COOLING DATA				HEATING DATA				ELECTRICAL DATA				REMARKS
											ENTERING		LEAVING								
TYPE	MARK				SUPPLY AIR	OUTSIDE AIR	EXTERNAL STATIC PRESS.	NOMINAL	TOTAL	SENSIBLE	DB	WB	DB	WB	HEATING TYPE 1	MAX HEATING CAPACITY	HEATING TYPE 2	HEATING	VOLTAGE	PHASE	MCA	MOCP	
AHU	1	SPLIT SYSTEM AIR HANDLER - HORIZONTAL	FRASER JOHNSON	AE48CX21	1,560 CFM	220 CFM	0.50 in-wg	4.0 ton	42,600 Btu/h	30,900 Btu/h	75.8 °F	63.3 °F	58.0 °F	54.3 °F	HEAT PUMP	48,800 Btu/h	ELECTRIC	10.0 kW	208 V	1	52 A	60 A	
AHU	2	SPLIT SYSTEM AIR HANDLER - HORIZONTAL	FRASER JOHNSON	THE60B31S	1,780 CFM	200 CFM	0.50 in-wg	5.0 ton	51,700 Btu/h	38,300 Btu/h	77.5 °F	64.5 °F	57.4 °F	54.8 °F	HEAT PUMP	61,000 Btu/h	ELECTRIC	10.0 kW	208 V	1	52 A	60 A	
AHU	3	SPLIT SYSTEM AIR HANDLER - VERTICAL	FRASER JOHNSON	THE60B31S	1,650 CFM	200 CFM	0.50 in-wg	5.0 ton	51,700 Btu/h	38,300 Btu/h	77.5 °F	64.5 °F	57.4 °F	54.8 °F	HEAT PUMP	61,000 Btu/h	ELECTRIC	10.0 kW	208 V	1	52 A	60 A	PROVIDE W/CONDENSATE PUMP.

1 AIR HANDLING UNITS SHALL BE PROVIDED WITH FILTER BASE EQUAL TO EZ FILTER EASY ACCESS FURNACE UNIT FILTER BASE. FILTER BASE SHALL ACCOMMODATE 2" FILTER. UNITS SHALL BE PROVIDED WITH MINIMUM MERV 8 FILTERS. PROVIDE WITH EXTRA SET OF FILTERS.
2 INDOOR UNIT SHALL BE INSTALLED WITH DRAIN PAN. DRAIN FROM PAN SHALL BE ROUTED FULL SIZE TO SANITARY WASTE.
3 INDOOR UNIT SHALL BE INSTALLED WITH ELASTOMERIC VIBRATION ISOLATION PADS EQUAL TO AMBER BOOTH. PADS BE INSTALLED AS PER PAD MANUFACTURER'S RECOMMENDATION. UNIT SHALL BE SUPPORTED AT ALL FOUR CORNERS.
4 INDOOR UNIT SHALL BE PROVIDED WITH DISCONNECT SWITCH, SEE ELECTRICAL. INDOOR UNIT SHALL BE PROVIDED WITH CIRCUIT BREAKER FOR STRIP HEAT.
5 AHU CONDENSATE SHALL BE RUN FULL SIZE AND DISCHARGE TO EXTERIOR OF BUILDING, AS PER MANUFACTURER'S RECOMMENDATION.
6 AHU SHALL BE PROVIDED WITH LOW AMBIENT CONTROL.
7 UNIT SHALL OPERATE ON R-410A. 12 EER, 14 SEER @ AHRI CONDITIONS

HVAC -- CONDENSER SCHEDULE

DESIGNATION		DESCRIPTION	MANUFACTURER	MODEL	NOMINAL TONNAGE	HEATING PERFORMANCE @ 47°F	TOTAL COOLING CAPACITY	ELECTRICAL DATA				REMARKS
TYPE	MARK							VOLTAGE	PHASE	MCA	MOCP	
CU	1	SPLIT SYSTEM HEAT PUMP	FRASER JOHNSTON	THE48B31S	4 ton	48,800 Btu/h	48,000 Btu/h	208 V	3	18.4 A	30.0 A	
CU	2	SPLIT SYSTEM HEAT PUMP	FRASER JOHNSTON	THE60B31S	5 ton	61,000 Btu/h	51,700 Btu/h	208 V	3	21.2 A	35.0 A	
CU	3	SPLIT SYSTEM HEAT PUMP	FRASER JOHNSTON	THE60B31S	5 ton	61,000 Btu/h	51,700 Btu/h	208 V	3	21.2 A	35.0 A	

1 OUTDOOR UNIT SHALL BE PROVIDED WITH DISCONNECT SWITCH, SEE ELECTRICAL.
2 CONDENSER SHALL BE PROVIDED WITH LOW AMBIENT CONTROL.
3 CONDENSING UNIT AND INDOOR UNIT SHALL BE PROVIDED FROM SAME MANUFACTURER, AND BE FULLY COMPATIBLE WITH EACH OTHER.

HVAC -- CEILING EXHAUST FAN SCHEDULE

DESIGNATION		MANUFACTURER	MODEL	LOCATION		EXHAUST AIR CFM	EXTERNAL STATIC PRESSURE	ELECTRIC MOTOR DATA					REMARKS
TYPE	MARK			ROOM	NUMBER			MOTOR WATTS	VOLTAGE	PHASE	DRIVE	RPM	
CEF	1	COOK	GEMINI GC-148	MEN	121	125 CFM	0.20 in-wg	42 W	120 V	1	DIRECT	1006	PROVIDE WITH FAN SPEED CONTROLLER. FAN SHALL BE SWITCHED WITH RESTROOM LIGHTS.
CEF	2	COOK	GEMINI GC-148	WOMEN	122	125 CFM	0.20 in-wg	42 W	120 V	1	DIRECT	1006	PROVIDE WITH FAN SPEED CONTROLLER. FAN SHALL BE SWITCHED WITH RESTROOM LIGHTS.

1 EXHAUST FANS SHALL BE PROVIDED WITH SOLID STATE SPEED CONTROLLER, DISCHARGE BACKDRAFT DAMPER AND DISCONNECT SWITCH.
2 EXHAUST FANS SHALL BE PROVIDED WITH MANUFACTURER'S METAL GRILLE.
3 EXHAUST FANS SHALL BE PROVIDED WITH MANUFACTURER'S ISOLATOR KIT.
4 EXHAUST FANS SHALL BE SUPPORTED BY STRUCTURE BY MEANS OF ALL THREAD RODS AND MANUFACTURER'S MOUNTING BRACKETS.
5 EXHAUST FANS SHALL BE INTERLOCKED WITH LIGHT SWITCH OF ROOM THE FAN SERVES.

HVAC -- INDUSTRIAL EXHAUST FAN SCHEDULE

DESIGNATION		MANUFACTURER	MODEL	DESCRIPTION	MOUNTING	FAN DATA				ELECTRIC MOTOR DATA				REMARKS
TYPE	MARK					AIRFLOW	EXTERNAL STATIC PRESSURE	FAN RPM	SOUND LEVEL (SONES)	MOTOR HORSEPOWER	VOLTAGE	PHASE	DRIVE	
WEF	1	COOK	42XMMH	HEAVY DUTY MEDIUM-PRESSURE WALL EXHAUST FAN	WALL	13,600 CFM	0.30 in-wg	534	25	1.5 hp	480 V	3	BELT	
WEF	2	COOK	42XMMH	HEAVY DUTY MEDIUM-PRESSURE WALL EXHAUST FAN	WALL	13,600 CFM	0.30 in-wg	534	25	1.5 hp	480 V	3	BELT	
WEF	3	COOK	36XMWH	HEAVY DUTY MEDIUM-PRESSURE WALL EXHAUST FAN	WALL	12,000 CFM	0.30 in-wg	720	27	1.5 hp	480 V	3	BELT	

1 EXHAUST FANS SHALL BE PROVIDED WITH SOLID STATE SPEED CONTROLLER, DISCHARGE BACKDRAFT DAMPER AND DISCONNECT SWITCH.
2 EXHAUST FANS SHALL BE PROVIDED WITH MANUFACTURER'S 45° WEATHER HOOD, OSHA FAN GUARD, BIRD SCREEN, AND ANTI-CORROSION EPOXY COATING.
3 EXHAUST FANS SHALL BE PROVIDED WITH MANUFACTURER'S VIBRATION ISOLATOR KIT AND BELT TENSIONER.
4 EXHAUST FANS SHALL BE SUPPORTED BY STRUCTURE BY MEANS OF WALL COLLAR KIT AND MANUFACTURER'S MOUNTING BRACKETS.
5 EXHAUST FANS SHALL BE CONTROLLED BY 7-DAY PROGRAMMABLE THERMOSTAT WITH HAND-OFF-AUTO CONTROL TO ALLOW FOR MANUAL OVERRIDE.

WALL ENGINEERING
PO BOX 1457, DURANT, OK 74702
OKLAHOMA CA #5413 EXP. JUNE 30, 2023

SUBMITTAL / REVISIONS:

DATE	BY	SUBMITTAL / REVISION

SHAWNEE MUNICIPAL AUTHORITY
WASTEWATER SYSTEM IMPROVEMENTS
SHAWNEE, OKLAHOMA

MECHANICAL SCHEDULES

PROJECT NO. SHN-20-01
DATE 06/22
DRAWN BY: CD
CHECKED BY: BB
REVIEWED BY: BB
SCALE: AS SHOWN

BAR IS ONE INCH ON ORIGINAL DRAWING
0" 1"
IF NOT ONE INCH ON THIS SHEET, ADJUST SCALES ACCORDINGLY

SHEET M5



BROWN ENGINEERS
501-448-0100

P:\PRODUCTION\PROJECTS\WALL ENGINEERING (WE)\WE-055 SHAWNEE NORTHSIDE WASTEWATER TREATMENT PLANT\DWG\M5.DWG
5/20/2022 1:42 PM

HVAC -- ELECTRIC UNIT HEATER SCHEDULE

DESIGNATION						ELECTRICAL DATA			
TYPE	MARK	DESCRIPTION	MANUFACTURER	MODEL	MOUNTING	VOLTAGE	PHASE	WATTAGE	COMMENTS
EUH	1	INDUSTRIAL HORIZONTAL FORCED-AIR ELECTRIC HEATER	MARKEL	P3PUH75CA2SDTE	WALL	480 V	3	7.5 kW	MOUNT AT 9'-0" AFF.
EUH	2	INDUSTRIAL HORIZONTAL FORCED-AIR ELECTRIC HEATER	MARKEL	P3PUH75CA2SDTE	WALL	480 V	3	7.5 kW	MOUNT AT 9'-0" AFF.
EUH	3	INDUSTRIAL HORIZONTAL FORCED-AIR ELECTRIC HEATER	MARKEL	P3PUH75CA2SDTE	WALL	480 V	3	7.5 kW	MOUNT AT 9'-0" AFF.
EUH	4	INDUSTRIAL HORIZONTAL FORCED-AIR ELECTRIC HEATER	MARKEL	P3PUH75CA2SDTE	WALL	480 V	3	7.5 kW	MOUNT AT 9'-0" AFF.
EUH	5	INDUSTRIAL HORIZONTAL FORCED-AIR ELECTRIC HEATER	MARKEL	P3PUH75CA2SDTE	WALL	480 V	3	7.5 kW	MOUNT AT 9'-0" AFF.
EUH	6	INDUSTRIAL HORIZONTAL FORCED-AIR ELECTRIC HEATER	MARKEL	P3PUH75CA2SDTE	WALL	480 V	3	7.5 kW	MOUNT AT 9'-0" AFF.
EUH	7	INDUSTRIAL HORIZONTAL FORCED-AIR ELECTRIC HEATER	MARKEL	P3PUH75CA2SDTE	WALL	480 V	3	7.5 kW	MOUNT AT 9'-0" AFF.
EUH	8	INDUSTRIAL HORIZONTAL FORCED-AIR ELECTRIC HEATER	MARKEL	P3PUH75CA2SDTE	WALL	480 V	3	7.5 kW	MOUNT AT 9'-0" AFF.
EUH	9	INDUSTRIAL HORIZONTAL FORCED-AIR ELECTRIC HEATER	MARKEL	P3PUH75CA2SDTE	WALL	480 V	3	7.5 kW	MOUNT AT 9'-0" AFF.
EUH	10	INDUSTRIAL HORIZONTAL FORCED-AIR ELECTRIC HEATER	MARKEL	P3PUH75CA2SDTE	WALL	480 V	3	7.5 kW	MOUNT AT 9'-0" AFF.
EUH	11	INDUSTRIAL HORIZONTAL FORCED-AIR ELECTRIC HEATER	MARKEL	P3PUH75CA2SDTE	WALL	480 V	3	7.5 kW	MOUNT AT 9'-0" AFF.
EUH	12	INDUSTRIAL HORIZONTAL FORCED-AIR ELECTRIC HEATER	MARKEL	P3PUH75CA2SDTE	WALL	480 V	3	7.5 kW	MOUNT AT 9'-0" AFF.
WEUH	1	INDUSTRIAL HORIZONTAL FORCED-AIR ELECTRIC HEATER - WASHDOWN	MARKEL	P3P5515T	WALL	480 V	3	15.0 kW	MOUNT AT 12'-0" AFF.
WEUH	2	INDUSTRIAL HORIZONTAL FORCED-AIR ELECTRIC HEATER - WASHDOWN	MARKEL	P3P5515T	WALL	480 V	3	15.0 kW	MOUNT AT 12'-0" AFF.
WEUH	3	INDUSTRIAL HORIZONTAL FORCED-AIR ELECTRIC HEATER - WASHDOWN	MARKEL	P3P5507T	WALL	480 V	3	7.5 kW	MOUNT AT 12'-0" AFF.
WEUH	4	INDUSTRIAL HORIZONTAL FORCED-AIR ELECTRIC HEATER - WASHDOWN	MARKEL	P3P5507T	WALL	480 V	3	7.5 kW	MOUNT AT 12'-0" AFF.

1 STANDARD HEATERS SHALL BE PROVIDED WITH MANUFACTURER'S DISCONNECT AND BUILT-IN 120V THERMOSTAT.
2 STANDARD HEATERS SHALL BE PROVIDED WITH MANUFACTURER'S SUMMER FAN SWITCH OVERRIDE.
3 STANDARD HEATERS SHALL BE PROVIDED WITH MANUFACTURER'S EPOXY COATING.
4 WASHDOWN HEATERS SHALL BE PROVIDED WITH MANUFACTURER'S DISCONNECT, WATERPROOF REMOTE THERMOSTAT, NEMA 4X WATERPROOF CONTROL BOX, AND HAND-OFF-AUTO SWITCH.
5 WASHDOWN HEATERS SHALL HAVE STAINLESS STEEL SHROUD, GRILLES, AND HEATING ELEMENTS. FAN SHALL BE EPOXY COATED.
6 WASHDOWN HEATERS SHALL BE MOUNTED USING MANUFACTURER'S STAINLESS STEEL MOUNTING BRACKET. MOUNTING SHALL BE WALL-MOUNT OR SUSPENDED FROM STRUCTURE.
7 WASHDOWN HEATERS SHALL BE MOUNTED USING MANUFACTURER'S STAINLESS STEEL MOUNTING BRACKET. MOUNTING SHALL BE WALL-MOUNT OR SUSPENDED FROM STRUCTURE.

HVAC -- LOUVER SCHEDULE

DESIGNATION				AIRFLOW DATA						FACE SIZE			
TYPE	MANUFACTURER	MODEL	STYLE	STATIC PRESSURE	DESIGN AIRFLOW	FREE AREA	DESIGN INLET VELOCITY (FPM)	MAX INLET VELOCITY (FPM)	SAFETY FACTOR	W	H	FINISH	REMARKS
L1	POTTORFF	EFD-645	STATIONARY BLADE DRAINABLE INTAKE LOUVER	0.10 in-wg	6,000 CFM	6.6 SF	909	1,009	9.9%	42"	42"	EPOXY COATED	PROVIDE WITH MOTORIZED DAMPER. INTERLOCK WITH ASSOCIATED EXHAUST FAN. DAMPER SHALL OPEN FULLY BEFORE FAN ENERGIZES.
L2	POTTORFF	EFD-645	STATIONARY BLADE DRAINABLE INTAKE LOUVER	0.10 in-wg	6,600 CFM	7.6 SF	868	1,009	13.9%	48"	42"	EPOXY COATED	PROVIDE WITH MOTORIZED DAMPER. INTERLOCK WITH ASSOCIATED EXHAUST FAN. DAMPER SHALL OPEN FULLY BEFORE FAN ENERGIZES.
L3	POTTORFF	EFD-645	STATIONARY BLADE DRAINABLE INTAKE LOUVER	0.10 in-wg	200 CFM	0.5 SF	400	1,009	60.4%	18"	12"	EPOXY COATED	PROVIDE WITH MANUAL BALANCING DAMPER. BALANCE TO OSA AIRFLOW OF ASSOCIATED AIR HANDLER.

1 CONTRACTOR SHALL COORDINATE COLOR AND FINISH WITH ARCHITECT. CONTRACTOR SHALL SUBMIT MANUFACTURER'S COLOR OPTIONS TO ARCHITECT BEFORE ORDERING ALL LOUVERS.
2 INTAKE LOUVERS SHALL BE INSTALLED WITH INSECT SCREEN. LOUVERS SHALL BE PROVIDED WITH MANUFACTURER'S ANTI-CORROSION EPOXY COATING.
3 FINAL HEIGHT AND LOCATION OF LOUVER SHALL BE COORDINATED WITH ELECTRICAL AND WASTEWATER EQUIPMENT LOCATIONS.
4 LOUVER SHALL, AT A MINIMUM, HAVE TWO FULL HORIZONTAL BLADES.
5 INSTALL BOTTOM OF LOUVERS AT 8" ABOVE FINISH FLOOR.

WALL ENGINEERING
PO BOX 1457, DURANT, OK 74702
OKLAHOMA CA #5413 EXP. JUNE 30, 2023

SUBMITTAL / REVISIONS:

DATE	BY	SUBMITTAL / REVISION
.	.	.
.	.	.
.	.	.
.	.	.
.	.	.
.	.	.
.	.	.
.	.	.

SHAWNEE MUNICIPAL AUTHORITY
WASTEWATER SYSTEM IMPROVEMENTS
SHAWNEE, OKLAHOMA

MECHANICAL SCHEDULES

PROJECT NO.
SHN–20–01
DATE
06/22
DRAWN BY:
CD
CHECKED BY:
BB
REVIEWED BY:
BB
SCALE:
AS SHOWN

BAR IS ONE INCH ON ORIGINAL DRAWING
0' 1'
IF NOT ONE INCH ON THIS SHEET, ADJUST SCALES ACCORDINGLY

SHEET
M6

MELANIE C. RICHARDSON
No. 21764
CERTIFIED PROFESSIONAL ENGINEER
OKLAHOMA
BROWN ENGINEERS
501-448-0100

P:\PRODUCTION\PROJECTS\WALL ENGINEERING (WE)\WE-055 SHAWNEE NORTHSIDE WASTEWATER TREATMENT PLANT\DWG\M6.DWG
5/20/2022 1:43 PM

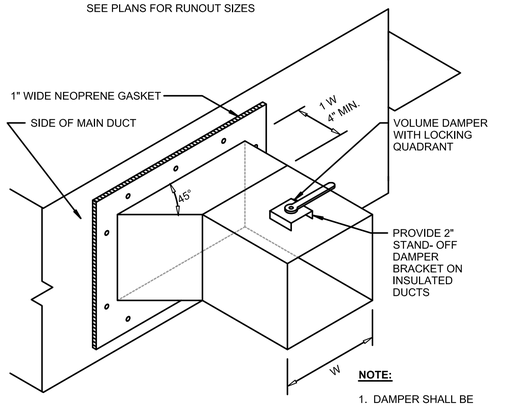

NOTE:

1. DAMPER SHALL BE EQUAL TO RUSKIN MD35.

1 BRANCH DUCT FITTING–RECTANGULAR
SCALE: NONE

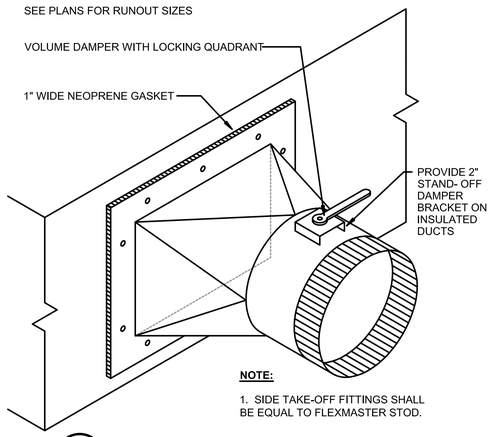

NOTE:

1. SIDE TAKE-OFF FITTINGS SHALL BE EQUAL TO FLEXMASTER STOD.

2 BRANCH DUCT FITTING–ROUND
SCALE: NONE

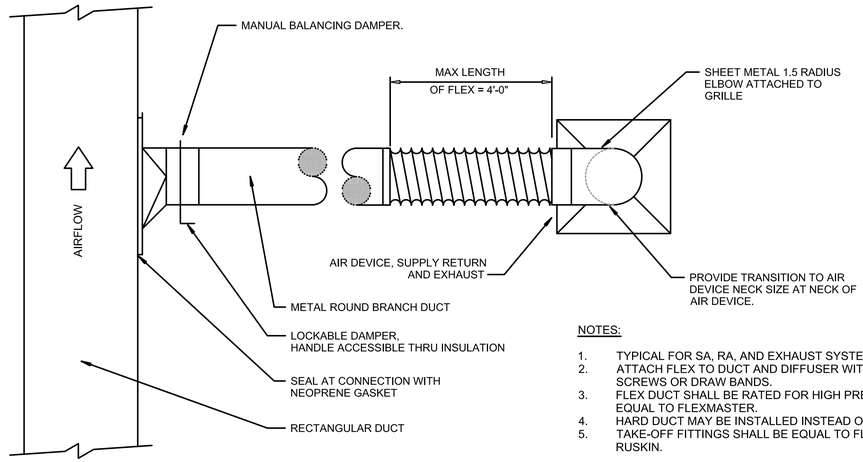

NOTES:

1. TYPICAL FOR SA, RA, AND EXHAUST SYSTEMS.
2. ATTACH FLEX TO DUCT AND DIFFUSER WITH SHEET METAL SCREWS OR DRAW BANDS.
3. FLEX DUCT SHALL BE RATED FOR HIGH PRESSURE AND EQUAL TO FLEXMASTER.
4. HARD DUCT MAY BE INSTALLED INSTEAD OF FLEX DUCT.
5. TAKE-OFF FITTINGS SHALL BE EQUAL TO FLEXMASTER OR RUSKIN.

3 BRANCH DUCT TAKE OFF
SCALE: NONE

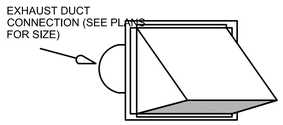

NOTES :

1. *WALL CAP SHALL BE EQUAL TO GREENHECK MODEL WC. FOR USE IN LOW-VOLUME EXHAUST APPLICATIONS (300 CFM OR LESS).*
2. *WALL CAP SHALL HAVE BIRDSCREEN AND BACKDRAFT DAMPER.*
3. *PAINT WALL CAP TO MATCH WALL.*
4. *MAINTAIN ALL CODE REQUIRED CLEARANCES FROM OUTSIDE AIR INTAKES, DOORS, AND OPERABLE WINDOWS.*

4 EXHAUST WALL CAP
SCALE: NONE

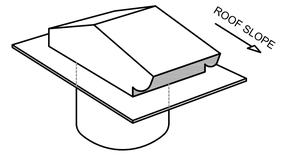

NOTES :

1. *ROOF JACK SHALL BE EQUAL TO GREENHECK MODEL RJ. FOR USE IN LOW-VOLUME EXHAUST APPLICATIONS (300 CFM OR LESS).*
2. *ROOF JACK SHALL HAVE BIRDSCREEN AND BACKDRAFT DAMPER.*
3. *WHERE ROOF JACK IS VISIBLE FROM GROUND LEVEL, COORDINATE FINISH WITH ARCHITECT.*
4. *PROVIDE NECK ADAPTOR AS REQUIRED FOR CONNECTION TO ROUND DUCT.*

5 EXHAUST ROOF JACK
SCALE: NONE

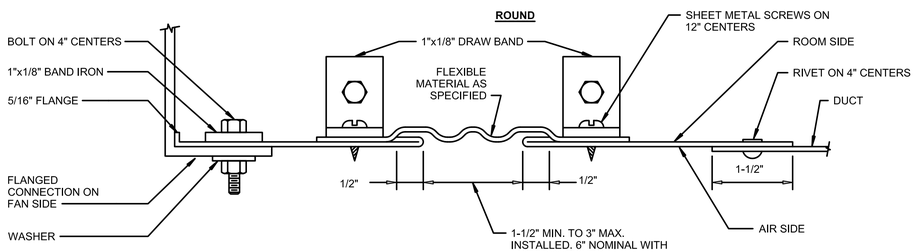

NOTES:

1. FLEXIBLE CONNECTIONS SHALL BE MADE AT ALL SUPPLY AND RETURN CONNECTIONS OF DUCTWORK TO AIR HANDLING UNITS. ALL CONNECTIONS SHALL BE AS PER SMACNA.

6 FLEXIBLE CONNECTION
SCALE: NONE

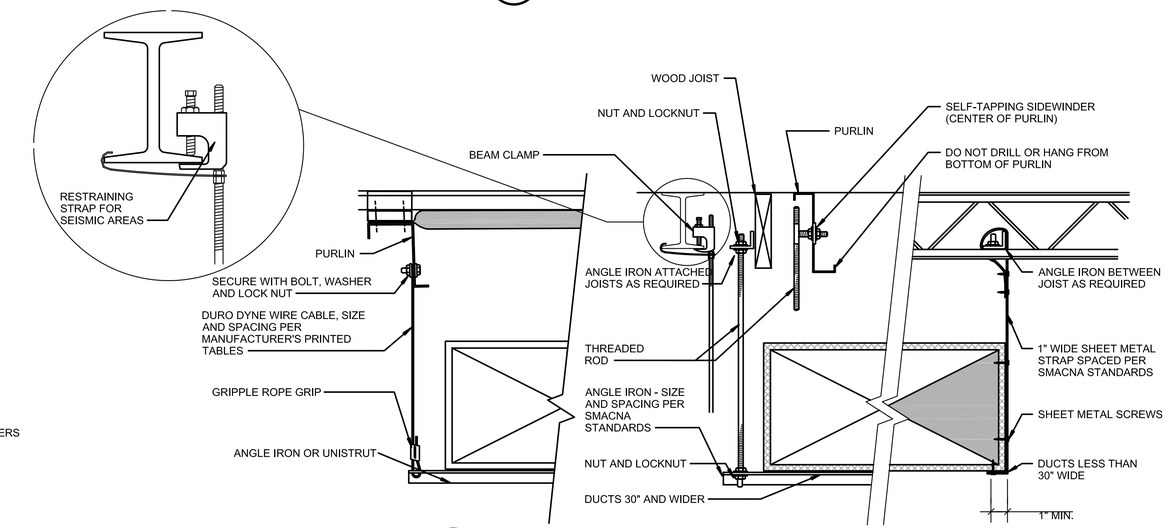

7 DUCT SUPPORT
SCALE: NONE

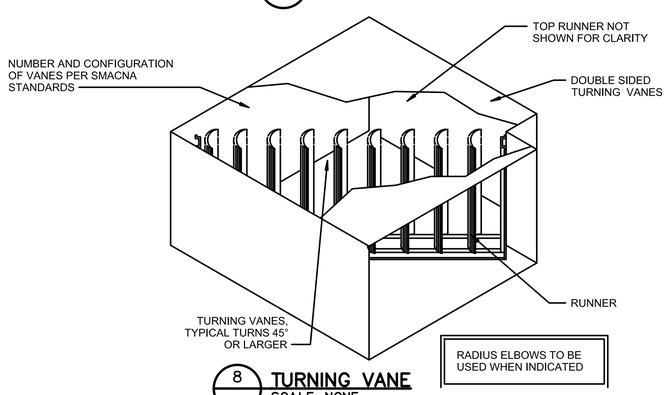

RADIUS ELBOWS TO BE USED WHEN INDICATED

8 TURNING VANE
SCALE: NONE

WALL ENGINEERING
PO BOX 1457, DURANT, OK 74702
OKLAHOMA CA #5413 EXP. JUNE 30, 2023

SUBMITTAL / REVISIONS:

DATE	BY	SUBMITTAL / REVISION

SHAWNEE MUNICIPAL AUTHORITY
WASTEWATER SYSTEM IMPROVEMENTS
SHAWNEE, OKLAHOMA

MECHANICAL DETAILS

PROJECT NO. SHN–20–01
DATE 06/22
DRAWN BY: CD
CHECKED BY: BB
REVIEWED BY: BB
SCALE: AS SHOWN

BAR IS ONE INCH ON ORIGINAL DRAWING
0" 1"
IF NOT ONE INCH ON THIS SHEET, ADJUST SCALES ACCORDINGLY

SHEET M7



BROWN ENGINEERS
501-448-0100

P:\PRODUCTION\PROJECTS\WALL ENGINEERING (WE)\WE-055 SHAWNEE NORTHSIDE WASTEWATER TREATMENT PLANT\DWG\M7.DWG
5/20/2022 1:44 PM

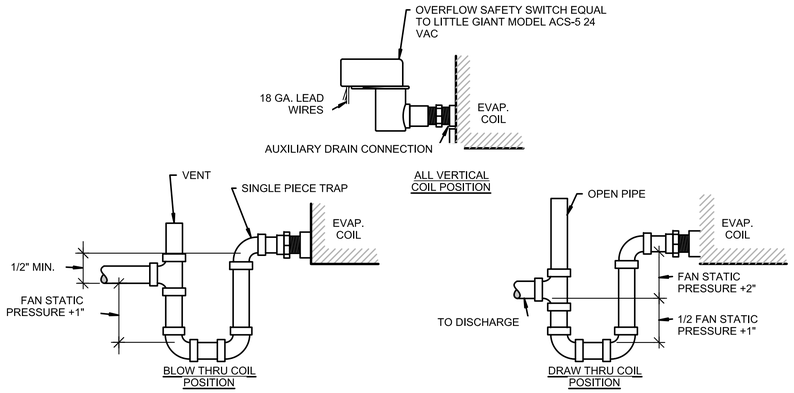

NOTES:

1. RUNNING TRAPS WILL NOT BE ACCEPTED.
2. INSTALL FACTORY FURNISHED TRAP WITH OUTSIDE AIR UNITS.
3. CONDENSATE DISCHARGE LOCATION SHALL MEET REQUIREMENTS OF ALL LOCAL CODES AND AUTHORITIES HAVING JURISDICTION.

1 CONDENSATE TRAP
SCALE: NONE

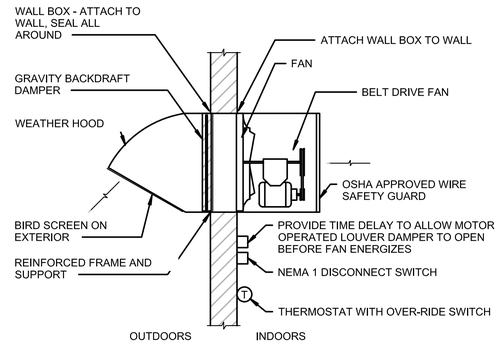

2 EXHAUST FAN – WALL – BELT DRIVE
SCALE: NONE

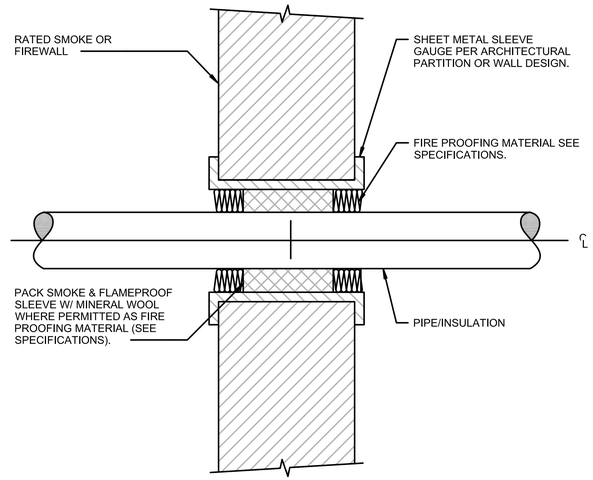

3 PIPE PENETRATION AT SMOKE AND FIREWALL
SCALE: NONE

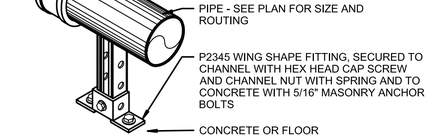

4 PIPE SUPPORT (REFRIGERANT)
SCALE: NONE

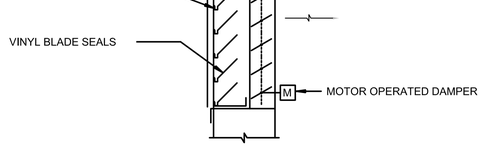

5 INTAKE LOUVER WITH MOTOR DAMPER
SCALE: NONE

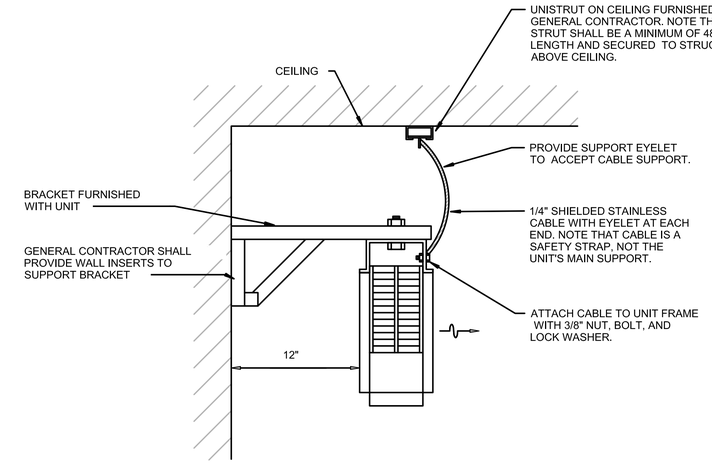

6 ELECTRIC UNIT HEATER
SCALE: NONE

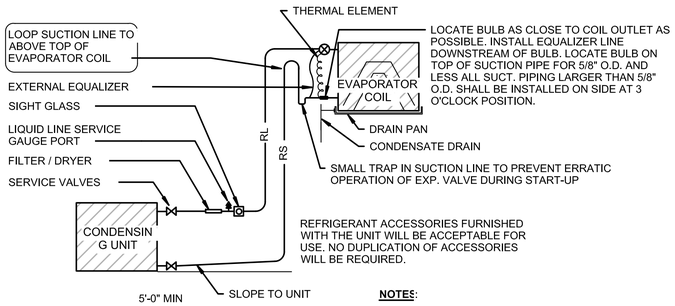

NOTES:

1. WRAP EXPANSION VALVE, BULB AND FITTINGS WITH ARMAFLEX INSULATION TAPE AND SECURE WITH BLACK CABLE TIES.
2. TRAP AND LOOP AT EVAPORATOR COIL IS NOT REQUIRED FOR UNITS WITH LIQUID LINE SOLENOID VALVES.
3. SUCTION LINES SHALL BE INSULATED. LIQUID LINES SHALL BE INSULATED ONLY ON DUCTLESS MINI-SPLITS.

7 REFRIGERANT PIPING
SCALE: NONE

WALL ENGINEERING
PO BOX 1457, DURANT, OK 74702
OKLAHOMA CA #5413 EXP. JUNE 30, 2023

SUBMITTAL / REVISIONS:

DATE	BY	SUBMITTAL / REVISION

SHAWNEE MUNICIPAL AUTHORITY
WASTEWATER SYSTEM IMPROVEMENTS
SHAWNEE, OKLAHOMA

MECHANICAL DETAILS

PROJECT NO.	SHN–20–01
DATE	06/22
DRAWN BY:	CD
CHECKED BY:	BB
REVIEWED BY:	BB
SCALE:	AS SHOWN

BAR IS ONE INCH ON ORIGINAL DRAWING
0" 1"
IF NOT ONE INCH ON THIS SHEET, ADJUST SCALES ACCORDINGLY

SHEET
M8



BROWN ENGINEERS
501-448-0100

P:\PRODUCTION\PROJECTS\WALL ENGINEERING (WE)\WE-055 SHAWNEE NORTHSIDE WASTEWATER TREATMENT PLANT\DWG\M8.DWG
5/20/2022 1:45 PM

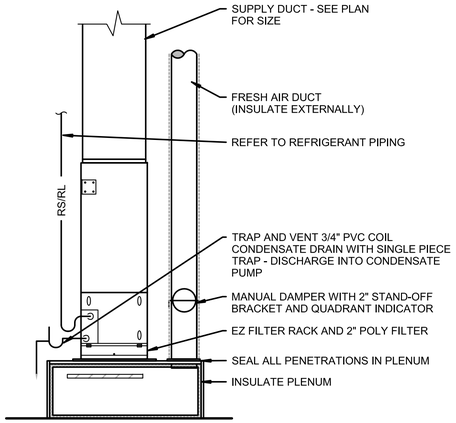

1 FAN COIL (V) DUCTED OSA
SCALE: NONE

NOTES:

1. UNIT MUST BE INSTALLED WITH COIL AND FILTER ACCESSIBLE FOR MAINTENANCE FROM BELOW CEILING OR FROM MECHANICAL PLATFORM.
2. DRAINS FROM UNIT SHALL BE SUPPORTED FROM PLATFORM, OR HUNG FROM STRUCTURE.
3. DRAIN LINES SHALL BE SLOPED AT MIN. 1/4" PER FOOT.
4. UNIT SHALL BE FURNISHED AND INSTALLED WITH VIBRATION ISOLATOR, NOT SHOWN FOR CLARITY.
5. UNIT AND PAN SHALL BE SUPPORTED FROM PLATFORM OR STRUCTURE AS PER MANUFACTURER'S RECOMMENDATION.

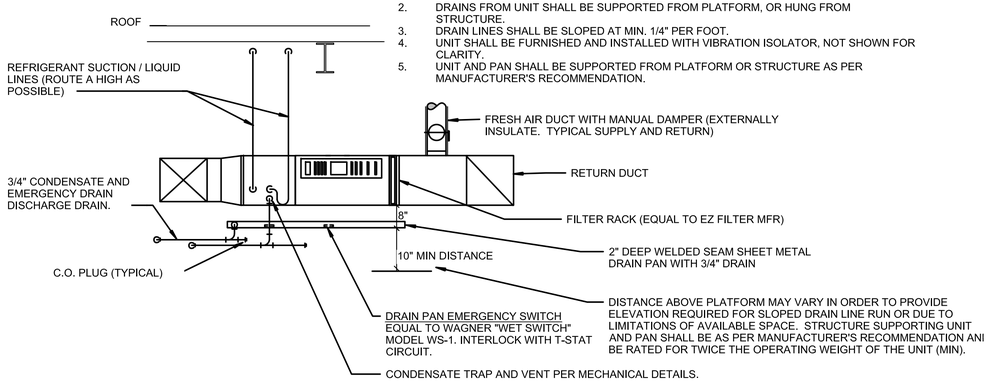

2 INDOOR UNIT – SPLIT SYSTEM
SCALE: NONE

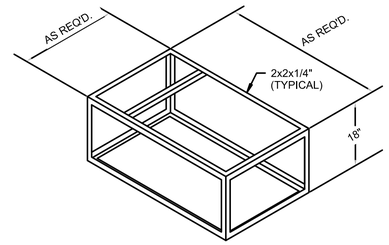

NOTES:

1. COVER TOP, BOTTOM, AND EXPOSED SIDES WITH 20 GA. SHEET METAL - SEAL JOINTS AIR TIGHT.
2. COVER ALL INTERIOR SURFACES OF PLENUM WITH 1" 3# DENSITY COATED FIBERGLASS LINER.
3. IF THERE ARE MULTIPLE FURNACE PLENUMS IN AN AREA, PROVIDE DIVIDER PIECE FOR EACH PLENUM.

3 FURNACE PLENUM
SCALE: NONE

WALL ENGINEERING
PO BOX 1457, DURANT, OK 74702
OKLAHOMA CA #5413 EXP. JUNE 30, 2023

SUBMITTAL / REVISIONS:

DATE	BY	SUBMITTAL / REVISION
. . . . .	. . . . .	. . . . .

SHAWNEE MUNICIPAL AUTHORITY
WASTEWATER SYSTEM IMPROVEMENTS
SHAWNEE, OKLAHOMA

MECHANICAL DETAILS

PROJECT NO.
SHN–20–01
DATE
06/22
DRAWN BY:
CD
CHECKED BY:
BB
REVIEWED BY:
BB
SCALE:
AS SHOWN

BAR IS ONE INCH ON ORIGINAL DRAWING
0" 1"
IF NOT ONE INCH ON THIS SHEET, ADJUST SCALES ACCORDINGLY

SHEET
M9



BROWN ENGINEERS
501-448-0100

P:\PRODUCTION\PROJECTS\WALL ENGINEERING (WE)\WE-055 SHAWNEE NORTHSIDE WASTEWATER TREATMENT PLANT\DWG\M9.DWG
5/20/2022 1:46 PM

IDENTIFICATION, GENERAL

SYMBOL	DESCRIPTION
XXXX / ####	EQUIPMENT TAG
P-99	SHEET INTERFACE
	SEQUENCE NUMBER
	DRAWING TYPE
P-99 / FROM/TO XXXX	SHEET INTERFACE WITH PROCESS FLAG
	PROCESS

INSTRUMENT POWER SUPPLY

120 PSIG IA – POWER SUPPLY, TYPE AND LEVEL SHOWN, ABBREVIATIONS AS FOLLOWS:
AS – AIR SUPPLY
IA – INSTRUMENT AIR
PA – PLANT AIR
ES – ELECTRIC SUPPLY
GS – GAS SUPPLY
HS – HYDRAULIC SUPPLY
NS – NITROGEN SUPPLY
ST – STEAM SUPPLY
WS – WATER SUPPLY

PIPING LINE TYPES

LINE	DESCRIPTION
	PROCESS LINE – PRIMARY
	PROCESS LINE – SECONDARY
	PACKAGE BOUNDARY
	AREA/BUILDING BOUNDARY
	SHOWN ELSEWHERE

PIPING, MISCELLANEOUS

SYMBOL	DESCRIPTION
	SLOPE ARROW ARROW DIRECTION DOWN
ST	LINE HEAT TRACED AND INSULATED ST = STEAM TRACED ET = ELECTRIC TRACED
	OUTSIDE GRADE LEVEL

ACCESSORIES AND APPURTENANCES

SYMBOL	DESCRIPTION
	UNION
	PLUG
	BLIND FLANGE
	HOSE CONNECTION
	SPRAY NOZZLE
	DRAIN
	FLEXIBLE CONNECTION, GENERAL
	FLEXIBLE HOSE
	QUICK CONNECTOR
1"	THREADED TAP
	FILTER
	'Y' TYPE STRAINER
	STRAINER
	EXPANSION JOINT
	ANNULAR SEAL

VALVES

SYMBOL	DESCRIPTION
	CHECK VALVE
	GATE VALVE
	BUTTERFLY VALVE
	BALL VALVE
	PLUG VALVE
	NEEDLE VALVE
	ROTARY VALVE
	KNIFE GATE VALVE
	THREE WAY VALVE
	FOUR WAY VALVE
	GLOBE VALVE
	CHARACTERIZED OR VEE–BALL VALVE
	STOP CHECK VALVE
	DIAPHRAM VALVE
	PRESSURE CONTROL VALVE (SELF CONTAINED)
	PRESSURE RELIEF VALVE
	VACUUM–RELIEF VALVE

VALVE OPERATORS

SYMBOL	DESCRIPTION
	HAND OPERATOR
	HAND OPERATOR (LONG)
	CHAIN OPERATOR
F	FLOAT OPERATOR
	AIR DIAPHRAGM OPERATOR
	POSITIONER
S	SOLENOID OPERATOR
	CYLINDER OPERATOR
	PRESSURE BALANCED DIAPHRAM OPERATOR
M	MOTOR OPERATOR
D	DIGITAL OPERATOR
EP	ELECTRO–HYDRAULIC OPERATOR
	FAIL ARROWS INDICATE OPEN PORTS
	LIMIT SWITCH

PROCESS EQUIPMENT

SYMBOL	DESCRIPTION
M	ELECTRIC MOTOR
V	VARIABLE SPEED DRIVE
G	ELECTRIC GENERATOR
	HYDRAULIC MOTOR
	AIR MOTOR
	SHAFT
	COUPLING
	DYNAMIC PUMP
	DYNAMIC COMPRESSOR
	POSITIVE DISPLACEMENT PUMP
	POSITIVE DISPLACEMENT COMPRESSOR
	EDUCTOR/EJECTOR
	HEATER, GENERAL
	HEATER W/FAN (INDUCED DRAFT)
	HEATER W/FAN (FORCED DRAFT)
	HEAT EXCHANGER, GENERAL
	HYDRAULIC CYLINDER
	AIR CYLINDER

INSTRUMENT PRIMARY ELEMENTS

SYMBOL	DESCRIPTION
	THREADED TAP
	THERMOWELL
	SIGHT FLOW INDICATOR
	ROTAMETER
	FLOW ORIFICE
	FLOW ORIFICE IN QUICK CHANGE FITTING
	SINGLE PORT PITOT
	VENTURI TUBE
	AVERAGING PITOT STATION
	FLUME
	WEIR
	TURBINE ELEMENT
	POSITIVE DISPLACEMENT FLOWMETER
	VORTEX SENSOR
	TARGET ELEMENT
MASS	MASS FLOWMETER
	SONIC FLOWMETER
M	MAG. FLOWMETER
	pH ELECTRODE ASSEMBLY
SA	SURGE ARRESTOR

AUXILIARY INSTRUMENTS OR FUNCTIONS

SYMBOL	DESCRIPTION
	TEST POINT, TERMINAL BLOCK WITH SLIDING LINK AND MINI–BANANA SOCKETS
P	PURGE OR FLUSHING DEVICE
I	INTERLOCK LOGIC WITH REFERENCE
	DIAPHRAM SEAL
R	RESET FOR LATCH TYPE OPERATOR
	PANEL MOUNTED PATCHBOARD POINT
	PILOT LIGHT FOR PROCESS SIGNALS
	INSTRUMENTS SHARING COMMON HOUSING
+ – PS	LOOP POWER SUPPLY
pH	POWER OF HYDROGEN
TURB.	TURBIDITY

MEANING OF FUNCTIONAL INSTRUMENT IDENTIFICATION LETTERS

	FIRST LETTER		SUCCEEDING LETTERS		
	MEASURED OR INITIATING VARIABLE	MODIFIER	READOUT OR PASSIVE FUNCTION	OUTPUT FUNCTION	MODIFIER
A	ANALYSIS		ALARM		
B	BURNER FLAME		USER CHOICE	USER CHOICE	USER CHOICE
C	CONDUCTIVITY (ELECTRICAL)			CONTROL	
D	DENSITY (MASS) OR SPECIFIC GRAVITY	DIFFERENTIAL			
E	VOLTAGE (EMF)		PRIMARY ELEMENT		
F	FLOW RATE	RATIO(FRACTION)			
G	GAUGING(DIMENSIONAL)		GLASS		
H	HAND(MANUALLY INITIATED)				HIGH
I	CURRENT(ELECTRICAL)		INDICATE		
J	POWER	SCAN			
K	TIME OR TIME–SCHEDULE			CONTROL STATION	
L	LEVEL		LIGHT(PILOT)		LOW
M	MOISTURE OR HUMIDITY	MOMENTARY			MIDDLE OR INTERMEDIATE
N	USER CHOICE		USER CHOICE	USER CHOICE	USER CHOICE
O	USER CHOICE		ORIFICE(RESTRICTION)		
P	PRESSURE OR VACUUM		POINT(TEST POINT)		
Q	QUANTITY OR EVENT	INTEGRATE OR TOTALIZE			
R	RADIATION		RECORD OR PRINT		
S	SPEED OR FREQUENCY	SAFETY		SWITCH	
T	TEMPERATURE			TRANSMIT	
U	MULTIVARIABLE		MULTIFUNCTION	MULTIFUNC.	MULTIFUNCTION
V	VIBRATION OR MECHANICAL ANALYSIS			VALVE, DAMPER, OR LOUVER	
W	WEIGHT OR FORCE		WELL		
X	UNCLASSIFIED		UNCLASSIFIED	UNCLASSIFIED	UNCLASSIFIED
Y	EVENT, STATE OR PRESENCE			RELAY OR COMPUTE	
Z	POSITION			DRIVE, ACTUATE OR UNCLASSIFIED FINAL CONTROL ELEMENT	

JI SURGE ARRESTOR, SEE SPECIFICATIONS

INSTRUMENTS OR FUNCTIONS

KEY [SYMBOL] BLOCK TAG	PRIMARY LOCATION; OPERATOR ACCESSIBLE	AUXILIARY LOCATION; OPERATOR ACCESSIBLE	LOCATION NOT NORMALLY OPERATOR ACCESSIBLE	FIELD MOUNTED
DISCRETE INSTRUMENTS				
SHARED DISPLAY SHARED CONTROL				
COMPUTER FUNCTION				
PROGRAMMABLE LOGIC CONTROLLER				

INSTRUMENT LINE TYPES

LINE	DESCRIPTION
	PROCESS CONNECTION
	UNDEFINED SIGNAL
	PNEUMATIC SIGNAL
	ELECTRIC SIGNAL
	HYDRAULIC SIGNAL
	CAPILLARY OR FILLED TUBE
	ELECTROMAGNETIC OR SONIC SIGNAL (GUIDED)
	ELECTROMAGNETIC OR SONIC SIGNAL (UNGUIDED)
	INTERNAL SYSTEM LINK (SOFTWARE OR DATA LINK)
	MECHANICAL LINK
	PNEUMATIC BINARY (ON–OFF) SIGNAL
	ELECTRIC BINARY (ON–OFF) SIGNAL

SIGNAL CONDITIONERS

SYMBOL	DESCRIPTION	SYMBOL	DESCRIPTION
A/D	ANALOG TO DIGITAL	Σ	SUM
D/A	DIGITAL TO ANALOG	Δ	DIFFERENCE
I/P	CURRENT TO PRESSURE	√	SQUARE ROOT
P/I	PRESSURE TO CURRENT	f(x)	CHARACTERIZATION
F/I	FREQUENCY TO CURRENT	∫	INTEGRATION
I/I	CURRENT BOOST/ REPEATER		

I/O INTERFACE

(2)

DIGITAL SYSTEM I/O INTERFACE. DIRECTION OF TRIANGLE DENOTES WHETHER INPUT OR OUTPUT

NOTE:
QUANTITY OF INPUTS AND OUTPUTS IS DEPENDENT UPON THE NUMBER OF DEVICES OR PIECES OF EQUIPMENT THAT ARE BEING CONTROLLED AND/OR MONITORED. NUMBER IN PARENTHESES DENOTES QUANTITY OF MULTIPLE TYPICAL SIGNALS REPRESENTED.

FILLING DENOTES SIGNAL TYPE. THE FILLED TRIANGLE DENOTES AN ANALOG SIGNAL.

PROCESS NUMBERING

PMP–1 2 1 1
- INCREMENT
- TYPE
- TRAIN
- STRUCTURE

EQUIPMENT LINE TYPES

LINE	DESCRIPTION
	PROPOSED OR NEW EQUIPMENT
	EXISTING EQUIPMENT
	CONNECT NEW CABLE TO EXISTING CABLE ON TERMINAL BLOCK

WALL ENGINEERING
PO BOX 1457, DURANT, OK 74702
OKLAHOMA CA #5413 EXP. JUNE 30, 2023

SUBMITTAL / REVISIONS:

DATE	BY	SUBMITTAL / REVISION

SHAWNEE MUNICIPAL AUTHORITY
WASTEWATER SYSTEM IMPROVEMENTS
SHAWNEE, OKLAHOMA

PROCESS AND INSTRUMENTATION DIAGRAM
LEGEND AND ABBREVIATIONS

PROJECT NO.	SHN–20–01
DATE	06/22
DRAWN BY:	CD
CHECKED BY:	BB
REVIEWED BY:	BB
SCALE:	AS SHOWN

BAR IS ONE INCH ON ORIGINAL DRAWING
0" 1"
IF NOT ONE INCH ON THIS SHEET, ADJUST SCALES ACCORDINGLY

SHEET
P1

REGISTERED PROFESSIONAL ENGINEER
BRUCE BROWN
20995
OKLAHOMA
6-01-2022

BROWN ENGINEERS
501-448-0100

P:\PRODUCTION\PROJECTS\WALL ENGINEERING (WE)\WE–055 SHAWNEE NORTHSIDE WASTEWATER TREATMENT PLANT\DWG\PI1_LEGEND.DWG
5/19/2022 2:16 PM

P:\PRODUCTION\PROJECTS\WALL ENGINEERING (WE)\WE-055 SHAWNEE NORTHSIDE WASTEWATER TREATMENT PLANT\DWG\PI2_.DWG
6/3/2022 7:32 AM

CONTROL PANEL – RTU-A

OPERATOR INTERFACE/ CONTROL DEVICES

POWER SOURCE

FIELD

PCS

A 1211 ALARM
HS 1211 ACTION AM
YI 1211 STATUS OC
HS 1211 ACTION OC
YY 1211 DI OPENED
YY 1211 DI CLOSED
YY 1211 DI IN REMOTE
FY 1211 AI POSITION FEEDBACK
FY 1211 AO POSITION
CB 1211 480VAC–3P 15A/3P 1HP/F20
LINE 14C
FCV 1211 1HP/F20
1SL02
UY 0000 POWER MONITOR
FCV 1111 1HP/F20
1SL01
LINE 1

A 0000 POWER FAIL
DI 0000 FORCE CLOSE ONPOWER FAIL

A 1111 ALARM
HS 1111 ACTION AM
YI 1111 STATUS OC
HS 1111 ACTION OC
YY 1111 DI OPENED
YY 1111 DI CLOSED
YY 1111 DI IN REMOTE
FY 1111 AI POSITION FEEDBACK
FY 1111 AO POSITION
CB 1111 480VAC–3P 15A/3P 1HP/F20
FCV 1212 1HP/F20
1SG05
FCV 1112 1HP/F20
1SG01

A 1212 ALARM
HS 1212 ACTION AM
YI 1212 STATUS OC
HS 1212 ACTION OC
YY 1212 DI OPENED
YY 1212 DI CLOSED
YY 1212 DI IN REMOTE
FY 1212 AI POSITION FEEDBACK
FY 1212 AO POSITION
CB 1212 480VAC–3P 15A/3P 1HP/F20

A 1112 ALARM
HS 1112 ACTION AM
YI 1112 STATUS OC
HS 1112 ACTION OC
YY 1112 DI OPENED
YY 1112 DI CLOSED
YY 1112 DI IN REMOTE
FY 1112 AI POSITION FEEDBACK
FY 1112 AO POSITION
CB 1112 480VAC–3P 15A/3P 1HP/F20
P4 SCREEN #2
P3 SCREEN #1
FCV 3311 1HP/F20
3SG01
MANUAL SCREEN

A 3311 ALARM
HS 3311 ACTION AM
YI 3311 STATUS OC
HS 3311 ACTION OC
YY 3311 DI OPENED
YY 3311 DI CLOSED
YY 3311 DI IN REMOTE
FY 3311 AI POSITION FEEDBACK
FY 3311 AO POSITION
CB 3311 480VAC–3P 15A/3P 1HP/F20
P4 SCREEN #2
P3 SCREEN #1
FCV 2312 1HP/F20
3SG02

A 2312 ALARM
HS 2312 ACTION AM
YI 2312 STATUS OC
HS 2312 ACTION OC
YY 2312 DI OPENED
YY 2312 DI CLOSED
YY 2312 DI IN REMOTE
FY 2312 AI POSITION FEEDBACK
FY 2312 AO POSITION
CB 2312 480VAC–3P 15A/3P 1HP/F20
P6 GRIT #2
P5 GRIT #1
FCV 2313 1HP/F20
3SG03

A 2313 ALARM
HS 2313 ACTION AM
YI 2313 STATUS OC
HS 2313 ACTION OC
YY 2313 DI OPENED
YY 2313 DI CLOSED
YY 2313 DI IN REMOTE
FY 2313 AI POSITION FEEDBACK
FY 2313 AO POSITION
CB 2313 480VAC–3P 15A/3P 1HP/F20
P6 GRIT #2
P5 GRIT #1

FI 2221 NUM FLOW
FAH 2221 ALARM FLOW
FR 2221 TREND FLOW
FY 2221 AI FLOW
CB 2221 120VAC–1P 20A/1P 50VA/1F20N
FIT 2221 50VA/1F20N

FI 2321 NUM FLOW
FAH 2321 ALARM FLOW
FR 2321 TREND FLOW
FY 2321 AI FLOW
CB 2321 120VAC–1P 20A/1P 50VA/1F20N
FIT 2321 50VA/1F20N

FI 2121 NUM FLOW
FAH 2121 ALARM FLOW
FR 2121 TREND FLOW
FY 2121 AI FLOW
CB 2121 120VAC–1P 20A/1P 50VA/1F20N
FIT 2121 50VA/1F20N

P7 INFLUENT L.S.

WALL ENGINEERING
PO BOX 1457, DURANT, OK 74702
OKLAHOMA CA #5413 EXP. JUNE 30, 2023

SUBMITTAL / REVISIONS:

DATE	BY	SUBMITTAL / REVISION
.	.	.

SHAWNEE MUNICIPAL AUTHORITY
WASTEWATER SYSTEM IMPROVEMENTS
SHAWNEE, OKLAHOMA

PROCESS AND INSTRUMENTATION DIAGRAM

PROJECT NO.	SHN–20–01
DATE	06/22
DRAWN BY:	CD
CHECKED BY:	BB
REVIEWED BY:	BB
SCALE:	AS SHOWN

BAR IS ONE INCH ON ORIGINAL DRAWING
0" 1"
IF NOT ONE INCH ON THIS SHEET, ADJUST SCALES ACCORDINGLY

SHEET
P2

REGISTERED PROFESSIONAL ENGINEER
BRUCE W. BROWN
20995
OKLAHOMA
06-01-2022

BROWN ENGINEERS
501-448-0100

P:\PRODUCTION\PROJECTS\WALL ENGINEERING (WE)\WE-055 SHAWNEE NORTHSIDE WASTEWATER TREATMENT PLANT\DWG\PI3_.DWG
5/19/2022 2:20 PM

PCS

CONTROL PANEL – RTU-A

OPERATOR INTERFACE/ CONTROL DEVICES

POWER SOURCE

FIELD

KQI 1131 NUM SCREEN ETA ACTION SCREEN
HS 1131 ETA RESET
YI 1131 STATUS SCREEN RUNNING
YA 1131 SCREEN FAULT

KQI 1131 NUM SCREEN ETA ACTION SCREEN
HS 1131 ETA RESET
YI 1131 STATUS BRUSH RUNNING
YA 1131 BRUSH FAULT

KQI 1131 NUM SCREEN ETA ACTION SCREEN
HS 1131 ETA RESET
YI 1131 STATUS PRESS RUNNING
YA 1131 PRESS FAULT

YY 1131 DI BRUSH FAULT
YY 1131 DI BRUSH RUNNING
YY 1131 DI SCREEN FAULT
YY 1131 DI SCREEN RUNNING
YY 1131 DI PRESS FAULT
YY 1131 DI PRESS RUNNING

CB 1131 480VAC–3P 30A/3P

10HP/F30

VCP–1131
480VAC–3P
NEMA 4X
10HP/F30

TS 1131a MTR TEMP
TS 1131b AMB TEMP
LS 1131 HIGH LEVEL

480VA–3P MTR 1131b 1.5HP/F20
HS 1131a E-STOP
FV 1131a SCREW SPRAY
TS 1131c MTR TEMP

480VA–3P MTR 1131a 2HP/F20
HTR 1131a 120VA–1P .5KVA/1F20N

TS 1131d MTR TEMP
HS 1131b E-STOP
FV 1131b PRESS SPRAY
FV 1131c PRESS FLUSH

480VA–3P MTR 1131c 3HP/F20
HTR 1131b 120VA–1P .5KVA/1F20N

P2 H.W.

P2 H.W.

SCREEN #1

WALL ENGINEERING
PO BOX 1457, DURANT, OK 74702
OKLAHOMA CA #5413 EXP. JUNE 30, 2023

SUBMITTAL / REVISIONS:

DATE	BY	SUBMITTAL / REVISION
.	.	.
.	.	.
.	.	.
.	.	.
.	.	.
.	.	.
.	.	.
.	.	.

SHAWNEE MUNICIPAL AUTHORITY
WASTEWATER SYSTEM IMPROVEMENTS
SHAWNEE, OKLAHOMA

PROCESS AND INSTRUMENTATION DIAGRAM

PROJECT NO.
SHN–20–01
DATE
06/22
DRAWN BY:
CD
CHECKED BY:
BB
REVIEWED BY:
BB
SCALE:
AS SHOWN

BAR IS ONE INCH ON ORIGINAL DRAWING
0" 1"
IF NOT ONE INCH ON THIS SHEET, ADJUST SCALES ACCORDINGLY

SHEET
P3

REGISTERED PROFESSIONAL ENGINEER
BRUCE BROWN
20995
06-01-2022
OKLAHOMA

BROWN ENGINEERS
501-448-0100

P:\PRODUCTION\PROJECTS\WALL ENGINEERING (WE)\WE-055 SHAWNEE NORTHSIDE WASTEWATER TREATMENT PLANT\DWG\PI4_.DWG
5/19/2022 2:21 PM

PCS

CONTROL PANEL – RTU-A

OPERATOR INTERFACE/ CONTROL DEVICES

POWER SOURCE

FIELD INSTRUMENTS

KQI 1231 NUM SCREEN ETA ACTION SCREEN ETA RESET
HS 1231 ETA RESET
YI 1231 STATUS SCREEN RUNNING
YA 1231 SCREEN FAULT
KQI 1231 NUM SCREEN ETA ACTION SCREEN ETA RESET
HS 1231 ETA RESET
YI 1231 STATUS BRUSH RUNNING
YA 1231 BRUSH FAULT
KQI 1231 NUM SCREEN ETA ACTION SCREEN ETA RESET
HS 1231 ETA RESET
YI 1231 STATUS PRESS RUNNING
YA 1231 PRESS FAULT

YY 1231 DI BRUSH FAULT
YY 1231 DI BRUSH RUNNING
YY 1231 DI SCREEN FAULT
YY 1231 DI SCREEN RUNNING
YY 1231 DI PRESS FAULT
YY 1231 DI PRESS RUNNING

CB 1231 480VAC–3P 30A/3P
10HP/F30

VCP–1231
480VAC–3P
NEMA 4X
10HP/F30

TS 1231g MTR TEMP
TS 1231b AMB TEMP
LS 1231 HIGH LEVEL
HS 1231g E-STOP
480VA–3P MTR 1231b M 1.5HP/F20
FV 1231g SCREW SPRAY
480VA–3P MTR 1231a 2HP/F20
TS 1231c MTR TEMP
HTR 1231a 120VA–1P .5KVA/1F20N
TS 1231d MTR TEMP
HS 1231b E-STOP
FV 1231b PRESS SPRAY
FV 1231c PRESS FLUSH
480VA–3P MTR 1231c 3HP/F20
HTR 1231b 120VA–1P .5KVA/1F20N

P2 H.W.
P2 H.W.

SCREEN #2

WALL ENGINEERING
PO BOX 1457, DURANT, OK 74702
OKLAHOMA CA #5413 EXP. JUNE 30, 2023

SUBMITTAL / REVISIONS:

DATE	BY	SUBMITTAL / REVISION
.	.	.
.	.	.
.	.	.
.	.	.
.	.	.
.	.	.
.	.	.
.	.	.

SHAWNEE MUNICIPAL AUTHORITY
WASTEWATER SYSTEM IMPROVEMENTS
SHAWNEE, OKLAHOMA

PROCESS AND INSTRUMENTATION DIAGRAM

PROJECT NO.
SHN–20–01
DATE
06/22
DRAWN BY:
CD
CHECKED BY:
BB
REVIEWED BY:
BB
SCALE:
AS SHOWN

BAR IS ONE INCH ON ORIGINAL DRAWING
0" 1"
IF NOT ONE INCH ON THIS SHEET, ADJUST SCALES ACCORDINGLY

SHEET
P4

REGISTERED PROFESSIONAL ENGINEER
BRUCE BROWN
20995
06-01-2022
OKLAHOMA

BROWN ENGINEERS
501-448-0100

PCS

CONTROL PANEL – RTU–A

OPERATOR INTERFACE/ CONTROL DEVICES

POWER SOURCE

FIELD I

YA 2131 STATUS SCREW CONVEYOR ZERO SPEED

YI 2131 STATUS PADDLE DRIVE RUNNING

KQI 2131 NUM PADDLE DRIVE ETA

HS 2131 ACTION PADDLE DRIVE ETA RESET

YI 2131 STATUS SCREW CONVEYOR RUNNING

KQI 2131 NUM SCREW CONVEYOR ETA

HS 2131 ACTION SCREW CONVEYOR ETA RESET

KQI 2131 NUM GRIT PUMP ETA

HS 2131 ACTION GRIT PUMP ETA RESET

YI 2131 STATUS GRIT PUMP RUNNING

A 2131 ALARM GENERAL

YY 2131 DI GENERAL ALARM

YY 2131 DI GRIT PUMP RUNNING

YY 2131 DI SCREW CONVEYOR RUNNING

FY 2131 DI PADDLE DRIVE RUNNING

CB 2131 480VAC–3P 60A/3P

20HP/F60

VCP–2131
480VAC–3P
NEMA 4X
20HP/F60

HS 2131a HOA

TS 2131a HI TEMP

480VAC–3P MTR 2131a

1HP/F20

HS 2131b E–STOP

480VAC–3P MTR 2131b

15HP/F40

HS 2131c HOA

HS 2131d E–STOP

HS 2131e HOA

HS 2131f E–STOP

TS 2131b HI TEMP

ZS 2131 ZERO SPEED

JS 2131 TORQUE

MTR 2131c 480VAC–3P

1HP/F20

P2 H.W.

P2 H.W.

GRIT #1

P:\PRODUCTION\PROJECTS\WALL ENGINEERING (WE)\WE–055 SHAWNEE NORTHSIDE WASTEWATER TREATMENT PLANT\DWG\PI5_.DWG
5/19/2022 2:22 PM

WALL ENGINEERING
PO BOX 1457, DURANT, OK 74702
OKLAHOMA CA #5413 EXP. JUNE 30, 2023

SUBMITTAL / REVISIONS:

DATE	BY	SUBMITTAL / REVISION
.	.	.
.	.	.
.	.	.
.	.	.
.	.	.
.	.	.
.	.	.
.	.	.

SHAWNEE MUNICIPAL AUTHORITY
WASTEWATER SYSTEM IMPROVEMENTS
SHAWNEE, OKLAHOMA

PROCESS AND INSTRUMENTATION DIAGRAM

PROJECT NO.
SHN–20–01

DATE
06/22

DRAWN BY:
CD

CHECKED BY:
BB

REVIEWED BY:
BB

SCALE:
AS SHOWN

BAR IS ONE INCH ON ORIGINAL DRAWING
0" 1"
IF NOT ONE INCH ON THIS SHEET, ADJUST SCALES ACCORDINGLY

REGISTERED PROFESSIONAL ENGINEER
BRUCE BROWN
20995
OKLAHOMA
06-01-2022

BROWN ENGINEERS
501-448-0100

SHEET

P5

P:\PRODUCTION\PROJECTS\WALL ENGINEERING (WE)\WE-055 SHAWNEE NORTHSIDE WASTEWATER TREATMENT PLANT\DWG\PI6_.DWG
5/19/2022 2:22 PM

PCS

CONTROL PANEL – RTU-A

OPERATOR INTERFACE/ CONTROL DEVICES

POWER SOURCE

FIELD

YI 2232 STATUS SCREW CONVEYOR ZERO SPEED
YA 2232 STATUS PADDLE DRIVE RUNNING
KQI 2232 NUM PADDLE DRIVE ETA
HS 2232 ACTION PADDLE DRIVE ETA RESET
YI 2232 STATUS SCREW CONVEYOR RUNNING
KQI 2232 NUM SCREW CONVEYOR ETA
HS 2232 ACTION SCREW CONVEYOR ETA RESET
KQI 2232 NUM GRIT PUMP ETA
HS 2232 ACTION GRIT PUMP ETA RESET
YI 2232 STATUS GRIT PUMP RUNNING
A 2232 ALARM GENERAL

YY 2232 DI GENERAL ALARM
YY 2232 DI GRIT PUMP RUNNING
YY 1 2232 DI SCREW CONVEYOR RUNNING
FY 2232 DI PADDLE DRIVE RUNNING

CB 2232 480VAC–3P 60A/3P
20HP/F60

VCP– 2232
480VAC–3P
NEMA 4X
20HP/F60

480VAC–3P MTR 2232a 1HP/F20
HS 2232a HOA
TS 2232a HI TEMP
HS 2232b E-STOP

480VAC–3P MTR 2232b 15HP/F40
HS 2232c HOA
HS 2232d E-STOP

HS 2232e HOA
HS 2232f E-STOP
TS 2232b HI TEMP
ZS 2232 ZERO SPEED
JS 2232 TORQUE
MTR 2232c 480VAC–3P 1HP/F20

P2 H.W.

P2 H.W.

GRIT #2

WALL ENGINEERING
PO BOX 1457, DURANT, OK 74702
OKLAHOMA CA #5413 EXP. JUNE 30, 2023

SUBMITTAL / REVISIONS:

DATE	BY	SUBMITTAL / REVISION
.	.	.
.	.	.
.	.	.
.	.	.
.	.	.
.	.	.
.	.	.
.	.	.

SHAWNEE MUNICIPAL AUTHORITY
WASTEWATER SYSTEM IMPROVEMENTS
SHAWNEE, OKLAHOMA

PROCESS AND INSTRUMENTATION DIAGRAM

PROJECT NO.
SHN–20–01
DATE
06/22
DRAWN BY:
CD
CHECKED BY:
BB
REVIEWED BY:
BB
SCALE:
AS SHOWN

BAR IS ONE INCH ON ORIGINAL DRAWING
0" 1"
IF NOT ONE INCH ON THIS SHEET, ADJUST SCALES ACCORDINGLY

SHEET
P6

REGISTERED PROFESSIONAL ENGINEER
BRUCE BROWN
20995
06-01-2022
OKLAHOMA

BROWN ENGINEERS
501-448-0100

P:\PRODUCTION\PROJECTS\WALL ENGINEERING (WE)\WE-055 SHAWNEE NORTHSIDE WASTEWATER TREATMENT PLANT\DWG\PI7_.DWG
6/3/2022 7:39 AM

PCS

CONTROL PANEL – RTU-A

OPERATOR INTERFACE/ CONTROL DEVICES

POWER SOURCE

FIELD

A 4081 ALARM
YI 4031 STATUS RUNNING
A 4031 ALARM
YI 4031 STATUS OVERTEMP
A 4031 ALARM
YI 4031 STATUS SEAL FAIL
A 4011 ALARM
YI 4011 STATUS OC
HS 4011 ACTION AM
HS 4011 ACTION OC
FI 4021 NUM FLOW
FAH 4021 ALARM FLOW
FR 4021 TREND FLOW
A 4031 ALARM
YI 4031 STATUS SEAL FAIL
A 4031 ALARM
YI 4031 STATUS OVERTEMP
YI 4031 STATUS RUNNING
LAH 4031 ALARM HIGH
LIR 4031 LEVEL
A 4012 ALARM
YI 4012 STATUS OC
HS 4012 ACTION AM
HS 4012 ACTION OC
FI 4022 NUM FLOW
FAH 4022 ALARM FLOW
FR 4022 TREND FLOW

YY 4011 DI OPENED
YY 4011 DI CLOSED
YY 4011 DI IN REMOTE
FY 4011 AI POSITION FEEDBACK
FY 4011 AO POSITION
YY 4012 DI OPENED
YY 4012 DI CLOSED
YY 4012 DI IN REMOTE
FY 4012 AI POSITION FEEDBACK
FY 4012 AO POSITION

YY 4081 DI GAS
YY 4031 DI PUMP 1 RUNNING
YY 4031 DI PUMP 1 OVERTEMP
YY 4031 DI PUMP 1 SEAL FAIL
FY 4021 AI FLOW
YY 4031 DI PUMP 2 SEAL FAIL
YY 4031 DI PUMP 2 OVERTEMP
YY 4031 DI PUMP 2 RUNNING
LY 4031 AI LEVEL
FY 4022 AI FLOW

CB 4081 120VAC–1P 20A/1P — 50VA/1F20N
CB 4041 480VAC–3P 200A/3P — 100HP/F200
CB 4011 480VAC–3P 15A/3P — 1HP/F20
CB 4021 120VAC–1P 20A/1P — 50VA/1F20N
CB 4031 120VAC–1P 20A/1P — 1.5KVA/1F20N
CB 4042 480VAC–3P 200A/3P — 100HP/F200
CB 4031a 120VAC–1P 20A/1P — 50VA/1F20N
CB 4012 480VAC–3P 15A/3P — 1HP/F20
CB 4022 120VAC–1P 20A/1P — 50VA/1F20N

AAH 4081 GAS 50VA/1F20N

VCP– 4031
120VAC–1P
NEMA 4X
1.5KVA/1F20N
INFLUENT PUMP CONTROL PANEL

LIT 4031a 50VA/1F20N

VFD– 4041
480VAC–3P
NEMA 3R
100HP/F200
DI – RUNNING
AI – SPEED FB
DI – READY
DO – START
AO – SPEED SP
DI – FAIL

VFD– 4042
480VAC–3P
NEMA 3R
100HP/F200
DI – RUNNING
AI – SPEED FB
DI – READY
DO – START
AO – SPEED SP
DI – FAIL

TS 4041 OVER TEMP
TB 4041 120VAC–1P "CL1, DIV 1"
MS 4041 SEAL FAIL
P2
M
MTR 4041 480VAC–3P 75HP/V. CABLE
FCV 4011 1HP/F20
FIT 4021 50VA/1F20N

TS 4042 OVER TEMP
TB 4042 120VAC–1P "CL1, DIV 1"
MS 4042 SEAL FAIL
480VAC–3P MTR 4042 75HP/V. CABLE
FCV 4012 1HP/F20
FIT 4022 50VA/1F20N

INFLUENT LIFT STATION

CONTINUED NEXT SHEET

WALL ENGINEERING
PO BOX 1457, DURANT, OK 74702
OKLAHOMA CA #5413 EXP. JUNE 30, 2023

SUBMITTAL / REVISIONS:

DATE	BY	SUBMITTAL / REVISION

SHAWNEE MUNICIPAL AUTHORITY
WASTEWATER SYSTEM IMPROVEMENTS
SHAWNEE, OKLAHOMA

PROCESS AND INSTRUMENTATION DIAGRAM

PROJECT NO.
SHN–20–01
DATE
06/22
DRAWN BY:
CD
CHECKED BY:
BB
REVIEWED BY:
BB
SCALE:
AS SHOWN

BAR IS ONE INCH ON ORIGINAL DRAWING
0" 1"
IF NOT ONE INCH ON THIS SHEET, ADJUST SCALES ACCORDINGLY

SHEET
P7

REGISTERED PROFESSIONAL ENGINEER
BRUCE BROWN
20995
OKLAHOMA
06-01-2022

BROWN ENGINEERS
501-448-0100

P:\PRODUCTION\PROJECTS\WALL ENGINEERING (WE)\WE-055 SHAWNEE NORTHSIDE WASTEWATER TREATMENT PLANT\DWG\PI8_.DWG
6/3/2022 7:44 AM

PCS

CONTROL PANEL – RTU-A

OPERATOR INTERFACE/ CONTROL DEVICES

POWER SOURCE

FIELD

A 4082 ALARM
YI 4031 STATUS RUNNING
A 4031 ALARM
YI 4031 STATUS OVERTEMP
A 4031 ALARM
YI 4031 STATUS SEAL FAIL
A 4013 ALARM
YI 4013 STATUS OC
HS 4013 ACTION AM
HS 4013 ACTION OC
FI 4023 NUM FLOW
FAH 4023 ALARM FLOW
FR 4023 TREND FLOW
A 4031 ALARM
YI 4031 STATUS SEAL FAIL
A 4031 ALARM
YI 4031 STATUS OVERTEMP
YI 4031 STATUS RUNNING
A 4014 ALARM
YI 4014 STATUS OC
HS 4014 ACTION AM
HS 4014 ACTION OC
FI 4024 NUM FLOW
FAH 4024 ALARM FLOW
FR 4024 TREND FLOW

YY 4082 DI GAS
YY 4031 DI PUMP 3 RUNNING
YY 4031 DI PUMP 3 OVERTEMP
YY 4031 DI PUMP 3 SEAL FAIL
YY 4013 DI OPENED
YY 4013 DI CLOSED
YY 4013 DI IN REMOTE
FY 4013 AI POSITION FEEDBACK
FY 4013 AO POSITION
FY 4023 AI FLOW
YY 4031 DI PUMP 4 SEAL FAIL
YY 4031 DI PUMP 4 OVERTEMP
YY 4031 DI PUMP 4 RUNNING
YY 4014 DI OPENED
YY 4014 DI CLOSED
YY 4014 DI IN REMOTE
FY 4014 AI POSITION FEEDBACK
FY 4014 AO POSITION
FY 4024 AI FLOW

CB 4082 120VAC–1P 20A/1P 50VA/1F20N
CB 4043 480VAC–3P 200A/3P 100HP/F200
CB 4013 480VAC–3P 15A/3P 1HP/F20
CB 4023 120VAC–1P 20A/1P 50VA/1F20N
CB 4044 480VAC–3P 200A/3P 100HP/F200
CB 4014 480VAC–3P 15A/3P 1HP/F20
CB 4024 120VAC–1P 20A/1P 50VA/1F20N

AAH 4082 GAS 50VA/1F20N

REFER TO VCP– 4031
INFLUENT PUMP CONTROL PANEL

DI – RUNNING
AI – SPEED FB
DI – READY
DO – START
AO – SPEED SP
DI – FAIL

VFD– 4043
480VAC–3P
NEMA 3R
100HP/F200

VFD– 4044
480VAC–3P
NEMA 3R
100HP/F200

TS 4043 OVER TEMP
MS 4043 SEAL FAIL
TB 4043 120VAC–1P "CL1, DIV 1"
MTR 4043 480VAC–3P 75HP/V. CABLE
FCV 4013 1HP/F20
FIT 4023 50VA/1F20N

TS 4044 OVER TEMP
MS 4044 SEAL FAIL
TB 4044 120VAC–1P "CL1, DIV 1"
MTR 4044 480VAC–3P 75HP/V. CABLE
FCV 4014 1HP/F20
FIT 4024 50VA/1F20N

CONTINUED PREVIOUS SHEET

P9
PRE EQ BASIN

INFLUENT LIFT STATION

WALL ENGINEERING
PO BOX 1457, DURANT, OK 74702
OKLAHOMA CA #5413 EXP. JUNE 30, 2023

SUBMITTAL / REVISIONS:

DATE	BY	SUBMITTAL / REVISION
.	.	.

SHAWNEE MUNICIPAL AUTHORITY
WASTEWATER SYSTEM IMPROVEMENTS
SHAWNEE, OKLAHOMA

PROCESS AND INSTRUMENTATION DIAGRAM

PROJECT NO.
SHN–20–01
DATE
06/22
DRAWN BY:
CD
CHECKED BY:
BB
REVIEWED BY:
BB
SCALE:
AS SHOWN

BAR IS ONE INCH ON ORIGINAL DRAWING
0" 1"
IF NOT ONE INCH ON THIS SHEET, ADJUST SCALES ACCORDINGLY

SHEET
P8

BRUCE BROWN 20995 OKLAHOMA REGISTERED PROFESSIONAL ENGINEER 06-01-2022
BROWN ENGINEERS 501-448-0100

P:\PRODUCTION\PROJECTS\WALL ENGINEERING (WE)\WE-055 SHAWNEE NORTHSIDE WASTEWATER TREATMENT PLANT\DWG\PI9_.DWG
6/3/2022 7:43 AM

PCS

CONTROL PANEL – RTU-B

OPERATOR INTERFACE/ CONTROL DEVICES

POWER SOURCE

FIELD INSTRUMENTS

A 8051 ALARM
HS 8051 ACTION AM
A 8052 ALARM
HS 8052 ACTION AM
YI 8051 STATUS OC
HS 8051 ACTION OC
YI 8052 STATUS OC
HS 8052 ACTION OC

YI 8011 STATUS READY
KQI 8011 NUM ETA
YI 8011 STATUS RUNNING
HS 8011 ACTION RESET ETM
A 8011 ALARM FAILED
HS 8011 ACTION HOA

YI 8012 STATUS READY
KQI 8012 NUM ETA
YI 8012 STATUS RUNNING
HS 8012 ACTION RESET ETM
A 8012 ALARM FAILED
HS 8012 ACTION HOA

YY 8051 DI OPENED
YY 8051 DI CLOSED
YY 8051 DI IN REMOTE
FY 8051 AI POSITION FEEDBACK
FY 8051 AO POSITION

YY 8052 DI OPENED
YY 8052 DI CLOSED
YY 8052 DI IN REMOTE
FY 8052 AI POSITION FEEDBACK
FY 8052 AO POSITION

YY 8011 DI RUNNING
YY 8011 DO RUN
YY 8011 DI READY

YY 8012 DI RUNNING
YY 8012 DO RUN
YY 8012 DI READY

CB 8051 480VAC–3P 15A/3P 1HP/F20
CB 8052 480VAC–3P 15A/3P 1HP/F20
CB 8011 480VAC–3P 25A/3P 6HP/F25
CB 8012 480VAC–3P 25A/3P 6HP/F25

FVNR–8011
480VAC–3P
NEMA SIZE 1
NEMA 4X
6HP/F20

FVNR–8012
480VAC–3P
NEMA SIZE 1
NEMA 4X
6HP/F20

FCV 8051 1HP/F20
FCV 8052 1HP/F20

TS 8011
MS 8011
TS 8012
MS 8012

MTR 8011 480VAC–3P 6HP/F25
MTR 8012 480VAC–3P 6HP/F25

P8
INFLUENT P.S.

CONTINUED NEXT SHEET

WALL ENGINEERING
PO BOX 1457, DURANT, OK 74702
OKLAHOMA CA #5413 EXP. JUNE 30, 2023

SUBMITTAL / REVISIONS:

DATE	BY	SUBMITTAL / REVISION
.	.	.
.	.	.
.	.	.
.	.	.
.	.	.
.	.	.
.	.	.
.	.	.

SHAWNEE MUNICIPAL AUTHORITY
WASTEWATER SYSTEM IMPROVEMENTS
SHAWNEE, OKLAHOMA

PROCESS AND INSTRUMENTATION DIAGRAM

PROJECT NO.
SHN–20–01
DATE
06/22
DRAWN BY:
CD
CHECKED BY:
BB
REVIEWED BY:
BB
SCALE:
AS SHOWN

BAR IS ONE INCH ON ORIGINAL DRAWING
0" 1"
IF NOT ONE INCH ON THIS SHEET, ADJUST SCALES ACCORDINGLY

SHEET
P9

REGISTERED PROFESSIONAL ENGINEER
BRUCE BROWN
20995
06-01-2022
OKLAHOMA

BROWN ENGINEERS
501-448-0100

PCS

CONTROL PANEL – RTU–B

OPERATOR INTERFACE/ CONTROL DEVICES

POWER SOURCE

FIELD

YI 8031 STATUS RUNNING
A 8031 ALARM
YI 8031 STATUS OVERTEMP
A 8031 ALARM
YI 8031 STATUS SEAL FAIL
A 9011 ALARM
YI 9011 STATUS OC
HS 9011 ACTION AM
HS 9011 ACTION OC
FI 9021 NUM FLOW
FAH 9021 ALARM FLOW
FR 9021 TREND FLOW
A 8031 ALARM
YI 8031 STATUS SEAL FAIL
A 8031 ALARM
YI 8031 STATUS OVERTEMP
YI 8031 STATUS RUNNING
LAH 8031 ALARM HIGH
LIR 8031 LEVEL
A 9012 ALARM
YI 9012 STATUS OC
HS 9012 ACTION AM
HS 9012 ACTION OC
FI 9022 NUM FLOW
FAH 9022 ALARM FLOW
FR 9022 TREND FLOW

YY 8031 DI PUMP 1 RUNNING
YY 8031 DI PUMP 1 OVERTEMP
YY 8031 DI PUMP 1 SEAL FAIL
9011 361 DI OPENED
YY 9011 DI CLOSED
YY 9011 DI IN REMOTE
FY 9011 AI POSITION FEEDBACK
FY 9011 AO POSITION
FY 9021 AI FLOW
YY 8031 DI PUMP 2 SEAL FAIL
YY 8031 DI PUMP 2 OVERTEMP
YY 8031 DI PUMP 2 RUNNING
LY 8031 AI LEVEL
YY 9012 DI OPENED
YY 9012 DI CLOSED
YY 9012 DI IN REMOTE
FY 9012 AI POSITION FEEDBACK
FY 9012 AO POSITION
FY 9022 AI FLOW

CB 8041 480VAC–3P 100A/3P 50HP/F100
CB 9011 480VAC–3P 15A/3P 1HP/F20
CB 9021 120VAC–1P 20A/1P 50VA/1F20N
CB 8031 120VAC–1P 20A/1P 1.5KVA/1F20N
CB 8042 480VAC–3P 100A/3P 50HP/F100
CB 8031a 120VAC–1P 20A/1P 50VA/1F20N
CB 9012 480VAC–3P 15A/3P 1HP/F20
CB 9022 120VAC–1P 20A/1P 50VA/1F20N

VCP– 8031
120VAC–1P
NEMA 4X
1.5KVA/1F20N
PRE EQ PUMP CONTROL PANEL

LIT 8031c

DI – RUNNING
AI – SPEED FB
DI – READY
DO – START
AO – SPEED SP
DI – FAIL

VFD– 8041
480VAC–3P
NEMA 3R
50HP/F100

VFD– 8042
480VAC–3P
NEMA 3R
50HP/F100

TB 8041 120VAC–1P NEMA 4X
TS 8041 OVER TEMP
MS 8041 SEAL FAIL
MTR 8041 480VAC–3P 40HP/V. CABLE
FCV 9011 1HP/F20
FIT 9021 50VA/1F20N

TB 8042 120VAC–1P NEMA 4X
TS 8042 OVER TEMP
MS 8042 SEAL FAIL
MTR 8042 480VAC–3P 40HP/V. CABLE
FCV 9012 1HP/F20
FIT 9022 50VA/1F20N

CONTINUED FROM PREVIOUS SHEET

PRE EQ LIFT STATION

CONTINUED NEXT SHEET

P:\PRODUCTION\PROJECTS\WALL ENGINEERING (WE)\WE–055 SHAWNEE NORTHSIDE WASTEWATER TREATMENT PLANT\DWG\PI10_.DWG
6/3/2022 7:46 AM

WALL ENGINEERING
PO BOX 1457, DURANT, OK 74702
OKLAHOMA CA #5413 EXP. JUNE 30, 2023

SUBMITTAL / REVISIONS:

DATE	BY	SUBMITTAL / REVISION
.	.	.

SHAWNEE MUNICIPAL AUTHORITY
WASTEWATER SYSTEM IMPROVEMENTS
SHAWNEE, OKLAHOMA

PROCESS AND INSTRUMENTATION DIAGRAM

PROJECT NO.
SHN–20–01
DATE
06/22
DRAWN BY:
CD
CHECKED BY:
BB
REVIEWED BY:
BB
SCALE:
AS SHOWN

BAR IS ONE INCH ON ORIGINAL DRAWING
0' 1'
IF NOT ONE INCH ON THIS SHEET, ADJUST SCALES ACCORDINGLY

SHEET
P10

REGISTERED PROFESSIONAL ENGINEER
BRUCE BROWN
20995
OKLAHOMA
06-01-2022

BROWN ENGINEERS
501-448-0100

PCS

CONTROL PANEL – RTU–B

OPERATOR INTERFACE/ CONTROL DEVICES

POWER SOURCE

FIELD

YI 8031 STATUS RUNNING
A 8031 ALARM
YI 8031 STATUS OVERTEMP
A 8031 ALARM
YI 8031 STATUS SEAL FAIL
A 9013 ALARM
YI 9013 STATUS OC
HS 9013 ACTION AM
HS 9013 ACTION OC
FI 9023 NUM FLOW
FAH 9023 ALARM FLOW
FR 9023 TREND FLOW
A 8031 ALARM
YI 8031 STATUS SEAL FAIL
A 8031 ALARM
YI 8031 STATUS OVERTEMP
YI 8031 STATUS RUNNING
A 9014 ALARM
YI 9014 STATUS OC
HS 9014 ACTION AM
HS 9014 ACTION OC
FI 9024 NUM FLOW
FAH 9024 ALARM FLOW
FR 9024 TREND FLOW

YY 9013 DI OPENED
YY 9013 DI CLOSED
YY 9013 DI IN REMOTE
FY 9013 AI POSITION FEEDBACK
FY 9013 AO POSITION
YY 9014 DI OPENED
YY 9014 DI CLOSED
YY 9014 DI IN REMOTE
FY 9014 AI POSITION FEEDBACK
FY 9014 AO POSITION

YY 8031 DI PUMP 3 RUNNING
YY 8031 DI PUMP 3 OVERTEMP
YY 8031 DI PUMP 3 SEAL FAIL
FY 9023 AI FLOW
YY 8031 DI PUMP 4 SEAL FAIL
YY 8031 DI PUMP 4 OVERTEMP
YY 8031 DI PUMP 4 RUNNING
FY 9024 AI FLOW

CB 8043 480VAC–3P 100A/3P 50HP/F100
CB 9013 480VAC–3P 15A/3P 1HP/F20
CB 9023 120VAC–1P 20A/1P 50VA/1F20N
CB 8044 480VAC–3P 100A/3P 50HP/F100
CB 9014 480VAC–3P 15A/3P 1HP/F20
CB 9024 120VAC–1P 20A/1P 50VA/1F20N

REFER TO VCP–8031

PRE EQ PUMP CONTROL PANEL

DI – RUNNING
AI – SPEED FB
DI – READY
DO – START
AO – SPEED SP
DI – FAIL

VFD–8043
480VAC–3P
NEMA 3R
50HP/F100

VFD–8044
480VAC–3P
NEMA 3R
50HP/F100

TS 8043 OVER TEMP
TB 8043 120VAC–1P NEMA 4X
MS 8043 SEAL FAIL
MTR 8043 480VAC–3P 40HP/V. CABLE
FCV 9013 1HP/F20
FIT 9023 50VA/1F20N

TS 8044 OVER TEMP
TB 8044 120VAC–1P NEMA 4X
MS 8044 SEAL FAIL
MTR 8044 480VAC–3P 40HP/V. CABLE
FCV 9014 1HP/F20
FIT 9024 50VA/1F20N

CONTINUED PREVIOUS SHEET

P13 SBR
P12 SBR
P12 SBR

PRE EQ LIFT STATION

P:\PRODUCTION\PROJECTS\WALL ENGINEERING (WE)\WE–055 SHAWNEE NORTHSIDE WASTEWATER TREATMENT PLANT\DWG\PI11_.DWG
6/3/2022 7:49 AM

WALL ENGINEERING
PO BOX 1457, DURANT, OK 74702
OKLAHOMA CA #5413 EXP. JUNE 30, 2023

SUBMITTAL / REVISIONS:

DATE	BY	SUBMITTAL / REVISION
.	.	.

SHAWNEE MUNICIPAL AUTHORITY
WASTEWATER SYSTEM IMPROVEMENTS
SHAWNEE, OKLAHOMA

PROCESS AND INSTRUMENTATION DIAGRAM

PROJECT NO.
SHN–20–01
DATE
06/22
DRAWN BY:
CD
CHECKED BY:
BB
REVIEWED BY:
BB
SCALE:
AS SHOWN

BAR IS ONE INCH ON ORIGINAL DRAWING
0" 1"
IF NOT ONE INCH ON THIS SHEET, ADJUST SCALES ACCORDINGLY

SHEET
P11

BRUCE BROWN 20995 OKLAHOMA REGISTERED PROFESSIONAL ENGINEER 06-01-2022

BROWN ENGINEERS 501-448-0100

P:\PRODUCTION\PROJECTS\WALL ENGINEERING (WE)\WE-055 SHAWNEE NORTHSIDE WASTEWATER TREATMENT PLANT\DWG\PI12_.DWG
5/19/2022 2:35 PM

PCS

CONTROL PANEL

OPERATOR INTERFACE/ CONTROL DEVICES

POWER SOURCE

FIELD

LIR 1071 LEVEL
AIR 1081 TSS
AIR 1082 DO
A 1011 ALARM
YI 1011 STATUS OC
HS 1011 ACTION AM
HS 1011 ACTION OC
YI 1041 STATUS READY
YI 1041 STATUS RUNNING
A 1041 ALARM FAILED
KQI 1041 NUM ETA
HS 1041 ACTION RESET ETM
HS 1041 ACTION HOA
A 1012 ALARM
YI 1012 STATUS OC
HS 1012 ACTION AM
HS 1012 ACTION OC
A 1013 ALARM
YI 1013 STATUS OC
HS 1013 ACTION AM
HS 1013 ACTION OC
A 1014 ALARM
YI 1014 STATUS OC
HS 1014 ACTION AM
HS 1014 ACTION OC
LIR 1072 LEVEL
AIR 1084 TSS
AIR 1083 DO
YI 1042 STATUS READY
YI 1042 STATUS RUNNING
A 1042 ALARM FAILED
KQI 1042 NUM ETA
HS 1042 ACTION RESET ETM
HS 1042 ACTION HOA
A 1015 ALARM
YI 1015 STATUS OC
HS 1015 ACTION AM
HS 1015 ACTION OC
A 1016 ALARM
YI 1016 STATUS OC
HS 1016 ACTION AM
HS 1016 ACTION OC

CB 1011 480VAC-3P 15A/3P 1HP/F20
CB 1041 480VAC-3P 125A/3P 75HP/F125
CB 1071 120VAC-1P 20A/1P 1.5KVA/1F20N
CB 1082 120VAC-1P 20A/1P 1.5KVA/1F20N
CB 1081 120VAC-1P 20A/1P 1.5KVA/1F20N
CB 1012 480VAC-3P 15A/3P 1HP/F20
CB 1013 480VAC-3P 15A/3P 1HP/F20
CB 1031 120VAC-1P 20A/1P 1.5KVA/1F20N
CB 1014 480VAC-3P 15A/3P 1HP/F20
CB 1042 480VAC-3P 125A/3P 75HP/F125
CB 1072 120VAC-1P 20A/1P 1.5KVA/1F20N
CB 1084 120VAC-1P 20A/1P 1.5KVA/1F20N
CB 1083 120VAC-1P 20A/1P 1.5KVA/1F20N
CB 1015 480VAC-3P 15A/3P 1HP/F20
CB 1016 480VAC-3P 15A/3P 1HP/F20

FVNR-1041
480VAC-3P
NEMA SIZE 4
NEMA 4X
75HP/F125

VCP-1031
120VAC-1P
1.5KVA/1F20N
SBR CONTROL PANEL

FVNR-1042
480VAC-3P
NEMA SIZE 4
NEMA 4X
75HP/F125

TB 1031 NEMA 4X

LIT 1071
AIT 1081 DO 50VA/1F20N
AIT 1082 TSS 50VA/1F20N
LIT 1072
AIT 1083 DO 50VA/1F20N
AIT 1084 TSS 50VA/1F20N

FCV 1011 1HP/F20
LS 1061 HI LEVEL
FCV 1012 1HP/F20
FCV 1013 1HP/F20
FCV 1014 1HP/F20
LS 1062 HI LEVEL
FCV 1015 1HP/F20
FCV 1016 1HP/F20

P11 PRE EQ BASIN
P17 POST EQ BASIN
P14 SLUDGE PUMPS

TS 1042
MS 1042
480VAC-3P MTR 1041 75HP/V. CABLE
480VAC-3P MTR 1042 75HP/V. CABLE

SBR #1
SBR #2

WALL ENGINEERING
PO BOX 1457, DURANT, OK 74702
OKLAHOMA CA #5413 EXP. JUNE 30, 2023

SUBMITTAL / REVISIONS:

DATE	BY	SUBMITAL / REVISION
.	.	.
.	.	.
.	.	.
.	.	.
.	.	.
.	.	.
.	.	.
.	.	.

SHAWNEE MUNICIPAL AUTHORITY
WASTEWATER SYSTEM IMPROVEMENTS
SHAWNEE, OKLAHOMA

PROCESS AND INSTRUMENTATION DIAGRAM

PROJECT NO.
SHN-20-01
DATE
06/22
DRAWN BY:
CD
CHECKED BY:
BB
REVIEWED BY:
BB
SCALE:
AS SHOWN

BAR IS ONE INCH ON ORIGINAL DRAWING
0' 1'
IF NOT ONE INCH ON THIS SHEET, ADJUST SCALES ACCORDINGLY

SHEET
P12

REGISTERED PROFESSIONAL ENGINEER
BRUCE BROWN
20995
06-01-2022
OKLAHOMA
BROWN ENGINEERS
501-448-0100

PCS

LIR 1073 LEVEL
AIR 1086 TSS
AIR 1085 DO
A 1017 ALARM
YI 1017 STATUS OC
HS 1017 ACTION AM
HS 1017 ACTION OC
YI 1043 STATUS READY
YI 1043 STATUS RUNNING
A 1043 ALARM FAILED
KQI 1043 NUM ETA
HS 1043 ACTION RESET ETM
HS 1043 ACTION HOA
A 1018 ALARM
YI 1018 STATUS OC
HS 1018 ACTION AM
HS 1018 ACTION OC
A 1019 ALARM
YI 1019 STATUS OC
HS 1019 ACTION AM
HS 1019 ACTION OC

CONTROL PANEL

OPERATOR INTERFACE/ CONTROL DEVICES

POWER SOURCE

CB 1017 480VAC–3P 15A/3P 1HP/F20
CB 1043 480VAC–3P 125A/3P 75HP/F125
CB 1073 120VAC–1P 20A/1P 50VA/1F20N
CB 1086 120VAC–1P 20A/1P 50VA/1F20N
CB 1085 120VAC–1P 20A/1P 50VA/1F20N
CB 1018 480VAC–3P 15A/3P 1HP/F20
CB 1019 480VAC–3P 15A/3P 1HP/F20

FIELD

FVNR–1043
480VAC–3P
NEMA SIZE 4
NEMA 4X
75HP/F125

REFER TO TB–1031

LIT 1073 50VA/1F20N
AIT 1086 TSS 50VA/1F20N
AIT 1085 DO 50VA/1F20N

FCV 1017 1HP/F20
LS 1063 HI LEVEL
FCV 1018 1HP/F20
FCV 1019 1HP/F20

PRE EQ BASIN

TS 1043
MS 1043
480VAC–3P MTR 1043 75HP/V. CABLE

P17 POST EQ BASIN
P14 SLUDGE PUMPS

SBR #3

WALL ENGINEERING
PO BOX 1457, DURANT, OK 74702
OKLAHOMA CA #5413 EXP. JUNE 30, 2023

SUBMITTAL / REVISIONS:

DATE	BY	SUBMITTAL / REVISION
.	.	.
.	.	.
.	.	.
.	.	.
.	.	.
.	.	.
.	.	.
.	.	.

SHAWNEE MUNICIPAL AUTHORITY
WASTEWATER SYSTEM IMPROVEMENTS
SHAWNEE, OKLAHOMA

PROCESS AND INSTRUMENTATION DIAGRAM

PROJECT NO.
SHN–20–01
DATE
06/22
DRAWN BY:
CD
CHECKED BY:
BB
REVIEWED BY:
BB
SCALE:
AS SHOWN

BAR IS ONE INCH ON ORIGINAL DRAWING
0' 1'
IF NOT ONE INCH ON THIS SHEET, ADJUST SCALES ACCORDINGLY

SHEET
P13

REGISTERED PROFESSIONAL ENGINEER
BRUCE BROWN
20995
OKLAHOMA
06-01-2022

BROWN ENGINEERS
501-448-0100

P:\PRODUCTION\PROJECTS\WALL ENGINEERING (WE)\WE–055 SHAWNEE NORTHSIDE WASTEWATER TREATMENT PLANT\DWG\PI13_.DWG
5/19/2022 2:36 PM

PCS

CONTROL PANEL

OPERATOR INTERFACE/ CONTROL DEVICES

POWER SOURCE

FIELD INSTRUMENTS

YI 1741 STATUS READY
YI 1741 STATUS RUNNING
A 1741 ALARM FAILED

KQI 1741 STATUS READY
HS 1741 STATUS RUNNING
HS 1741 ALARM FAILED

YI 1742 STATUS READY
YI 1742 STATUS RUNNING
A 1742 ALARM FAILED

KQI 1742 STATUS READY
HS 1742 STATUS RUNNING
HS 1742 ALARM FAILED

FI 1721 NUM FLOW
FAH 1721 ALARM FLOW
FR 1721 TREND FLOW

CB 1731 480VAC–3P 60A/3P
20HP/F60

CB 1721 120VAC–1P 20A/1P
50VA/1520N

REFER TO TB–1031

VCP–1731
480VAC–3P
NEMA 4X
20HP/F60

FIT 1721 50VA/1F20N

M

P15 DIGESTER

P16 DIGESTER

SBR WASTE

WASTE SLUDGE PUMPS

WALL ENGINEERING
PO BOX 1457, DURANT, OK 74702
OKLAHOMA CA #5413 EXP. JUNE 30, 2023

SUBMITTAL / REVISIONS:

DATE	BY	SUBMITTAL / REVISION
.	.	.
.	.	.
.	.	.
.	.	.
.	.	.
.	.	.
.	.	.
.	.	.

SHAWNEE MUNICIPAL AUTHORITY
WASTEWATER SYSTEM IMPROVEMENTS
SHAWNEE, OKLAHOMA

PROCESS AND INSTRUMENTATION DIAGRAM

PROJECT NO.
SHN–20–01
DATE
06/22
DRAWN BY:
CD
CHECKED BY:
BB
REVIEWED BY:
BB
SCALE:
AS SHOWN

BAR IS ONE INCH ON ORIGINAL DRAWING
0" 1"
IF NOT ONE INCH ON THIS SHEET, ADJUST SCALES ACCORDINGLY

SHEET
P14

REGISTERED PROFESSIONAL ENGINEER
BRUCE BROWN
20995
06-01-2022
OKLAHOMA

BROWN ENGINEERS
501-448-0100

P:\PRODUCTION\PROJECTS\WALL ENGINEERING (WE)\WE–055 SHAWNEE NORTHSIDE WASTEWATER TREATMENT PLANT\DWG\PI14_.DWG
5/19/2022 2:37 PM

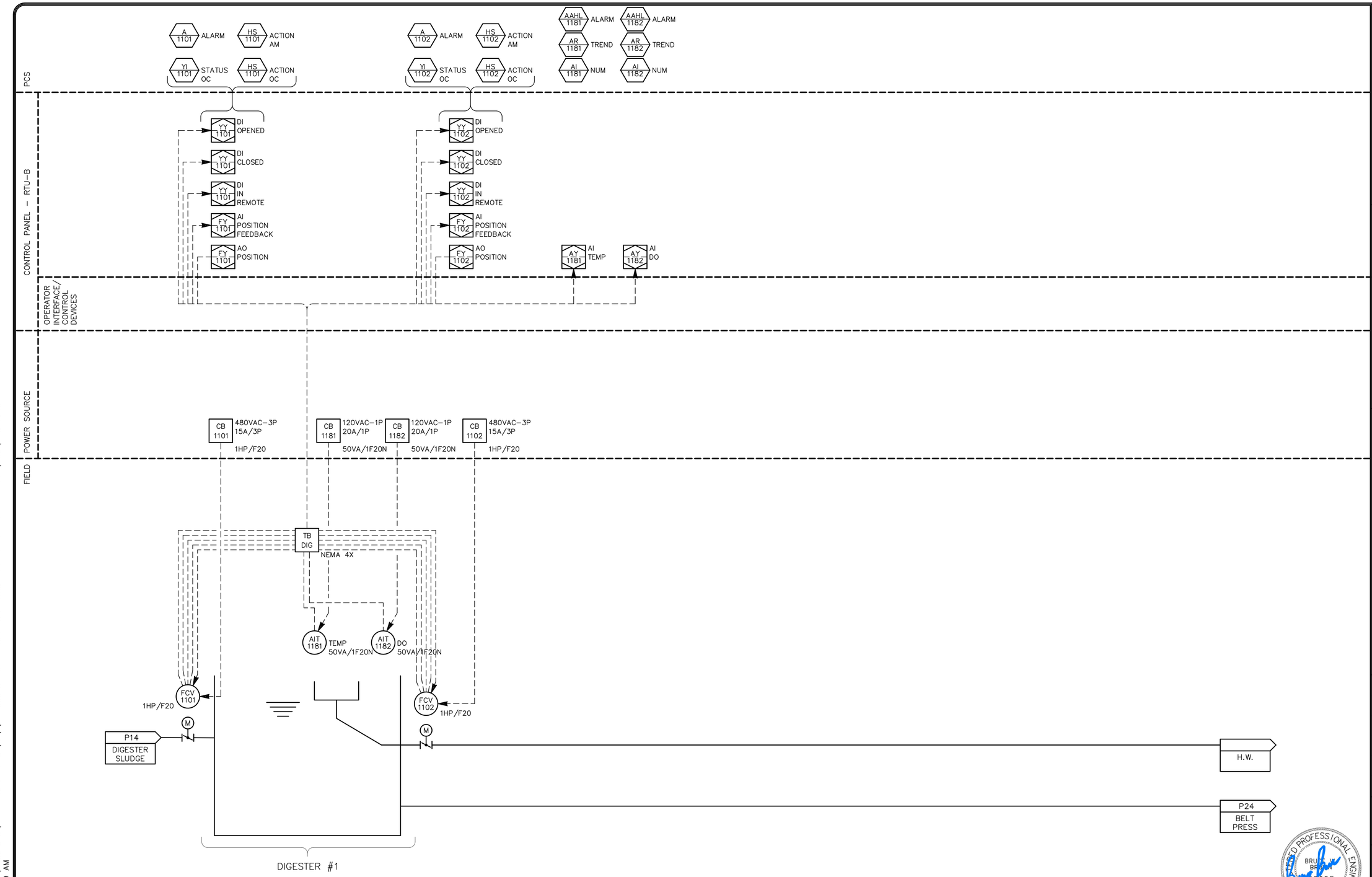

WALL ENGINEERING
PO BOX 1457, DURANT, OK 74702
OKLAHOMA CA #5413 EXP. JUNE 30, 2023

SUBMITTAL / REVISIONS:

DATE	BY	SUBMITTAL / REVISION
.	.	.

SHAWNEE MUNICIPAL AUTHORITY
WASTEWATER SYSTEM IMPROVEMENTS
SHAWNEE, OKLAHOMA

PROCESS AND INSTRUMENTATION DIAGRAM

PROJECT NO.
SHN–20–01
DATE
06/22
DRAWN BY:
CD
CHECKED BY:
BB
REVIEWED BY:
BB
SCALE:
AS SHOWN

BAR IS ONE INCH ON ORIGINAL DRAWING
0" 1"
IF NOT ONE INCH ON THIS SHEET, ADJUST SCALES ACCORDINGLY

SHEET
P15

REGISTERED PROFESSIONAL ENGINEER
BRUCE BROWN
20995
06-01-2022
OKLAHOMA

BROWN ENGINEERS
501-448-0100

P:\PRODUCTION\PROJECTS\WALL ENGINEERING (WE)\WE–055 SHAWNEE NORTHSIDE WASTEWATER TREATMENT PLANT\DWG\PI15_.DWG
6/3/2022 8:09 AM

PCS

CONTROL PANEL – RTU–B

OPERATOR INTERFACE/ CONTROL DEVICES

POWER SOURCE

FIELD

A 1103 ALARM
HS 1103 ACTION AM
YI 1103 STATUS OC
HS 1103 ACTION OC

A 1104 ALARM
HS 1104 ACTION AM
YI 1104 STATUS OC
HS 1104 ACTION OC

AAHL 1103 ALARM
AR 1103 TREND
AI 1103 NUM

AAHL 1104 ALARM
AR 1104 TREND
AI 1104 NUM

YY 1103 DI OPENED
YY 1103 DI CLOSED
YY 1103 DI IN REMOTE
FY 1103 AI POSITION FEEDBACK
FY 1103 AO POSITION

YY 1104 DI OPENED
YY 1104 DI CLOSED
YY 1104 DI IN REMOTE
FY 1104 AI POSITION FEEDBACK
FY 1104 AO POSITION

AY 1103 AI TEMP
AY 1104 AI DO

CB 1103 480VAC–3P 15A/3P 1HP/F20
CB 1183 120VAC–1P 20A/1P 50VA/1F20N
CB 1184 120VAC–1P 20A/1P 50VA/1F20N
CB 1104 480VAC–3P 15A/3P 1HP/F20

REFER TO – TB–DIG

AIT 1183 TEMP 50VA/1F20N
AIT 1184 DO 50VA/1F20N

FCV 1103 1HP/F20
FCV 1104 1HP/F20

P14 DIGESTER SLUDGE

H.W.

P24 BELT PRESS

DIGESTER #2

P:\PRODUCTION\PROJECTS\WALL ENGINEERING (WE)\WE–055 SHAWNEE NORTHSIDE WASTEWATER TREATMENT PLANT\DWG\PI16_.DWG
6/3/2022 8:11 AM

WALL ENGINEERING
PO BOX 1457, DURANT, OK 74702
OKLAHOMA CA #5413 EXP. JUNE 30, 2023

SUBMITTAL / REVISIONS:

DATE	BY	SUBMITTAL / REVISION
.	.	.
.	.	.
.	.	.
.	.	.
.	.	.
.	.	.
.	.	.
.	.	.

SHAWNEE MUNICIPAL AUTHORITY
WASTEWATER SYSTEM IMPROVEMENTS
SHAWNEE, OKLAHOMA

PROCESS AND INSTRUMENTATION DIAGRAM

PROJECT NO.
SHN–20–01
DATE
06/22
DRAWN BY:
CD
CHECKED BY:
BB
REVIEWED BY:
BB
SCALE:
AS SHOWN

BAR IS ONE INCH ON ORIGINAL DRAWING
0" 1"
IF NOT ONE INCH ON THIS SHEET, ADJUST SCALES ACCORDINGLY

REGISTERED PROFESSIONAL ENGINEER
BRUCE BROWN
20995
06-01-2022
OKLAHOMA

BROWN ENGINEERS
501-448-0100

SHEET
P16

PCS

CONTROL PANEL – RTU–C

OPERATOR INTERFACE/ CONTROL DEVICES

POWER SOURCE

FIELD

A 1512 ALARM
HS 1512 ACTION AM
YI 1512 STATUS OC
HS 1512 ACTION OC
A 1511 ALARM
HS 1511 ACTION AM
YI 1511 STATUS OC
HS 1511 ACTION OC
A 1611 ALARM
HS 1611 ACTION AM
YI 1611 STATUS OC
HS 1611 ACTION OC
YI 1641 STATUS READY
HS 1641 ACTION RESET ETM
YI 1641 STATUS RUNNING
SI 1641 NUM SPEED
QS 1641 SP SPEED
KQI 1641 NUM ETA
A 1641 ALARM FAILED
HS 1641 ACTION AM
YI 1642 STATUS READY
HS 1642 ACTION RESET ETM
YI 1642 STATUS RUNNING
SI 1642 NUM SPEED
QS 1642 SP SPEED
KQI 1642 NUM ETA
A 1642 ALARM FAILED
HS 1642 ACTION AM
PAHL 1600
PIR 1600
FR 2321a TREND FLOW
FI 2321a NUM FLOW
FAH 2321a ALARM FLOW

YY 1512 DI OPENED
YY 1512 DI CLOSED
YY 1512 DI IN REMOTE
FY 1512 AI POSITION FEEDBACK
FY 1512 AO POSITION
YY 1511 DI OPENED
YY 1511 DI CLOSED
YY 1511 DI IN REMOTE
FY 1511 AI POSITION FEEDBACK
FY 1511 AO POSITION
FY 1531 AO EFFLUENT FLOW
YY 1611 DI OPENED
YY 1611 DI CLOSED
YY 1611 DI IN REMOTE
FY 1611 AI POSITION FEEDBACK
FY 1611 AO POSITION
YY 1641 DI READY
SY 1641 AI SPEED FEEDBACK
YY 1641 DI RUNNING
YY 1641 DO START
SY 1641 AO SPEED SETPOINT
YY 1641 DI FAIL
YY 1642 DI READY
SY 1642 AI SPEED FEEDBACK
YY 1642 DI RUNNING
YY 1642 DO START
SY 1642 AO SPEED SETPOINT
YY 1642 DI FAIL
PY 1600 AI PRESSURE
FY 2321a AI FLOW

CB 1512 480VAC–3P 15A/3P 1HP/F20
CB 1511 480VAC–3P 15A/3P 1HP/F20
CB HSC 480VAC–3P 20A/3P 2.5KVA/F20
CB 1531 480VAC–3P 100A/3P 45KVA/F100
CB SCC 120VAC–1P 20A/1P 1.5KVA/1F20N
CB 1561 120VAC–1P 20A/1P 0.5KVA/1F20N
CB 1611 480VAC–3P 15A/3P 1HP/F20
CB 1641 480VAC–3P 90A/3P 50HP/F100
CB 1642 480VAC–3P 90A/3P 50HP/F100
CB 2321a 120VAC–1P 20A/1P 50VA/1F20N

UV HSC 480VAC–3P 2.5KVA/F20
VCP–1531 120VAC–1P NEMA 4X 45KVA/F100
UV SCC 120VAC–1P 1.5KVA/1F20N

DI – RUNNING
AI – SPEED_FB
DI – READY
DO – START
AO – SPEED_SP
DI – FAIL

VFD–1641 480VAC–3P NEMA 3R 50HP/F100
VFD–1642 480VAC–3P NEMA 3R 50HP/F100

U 1531 MODBUS
RT 1531a UV
RT 1531b UV
RT 1531c UV
RT 1531d UV
ZS 1531a IN PLACE
ZS 1531b IN PLACE
ZS 1531c IN PLACE
ZS 1531d IN PLACE
LS 1561 LOW LEVEL 0.5KVA/1F20N

FCV 1512 1HP/F20
FCV 1511 1HP/F20
FCV 1611 1HP/F20
15SL01
15SL02
15SL03

SBR #1
SBR #2
SBR #3

UV SYSTEM

480VAC–3P MTR 1641 40HP/F90
480VAC–3P MTR 1642 40HP/F90

PIT 1600
P25 BELT PRESS
FIT 2321a 50VA/1F20N
P18 EFFLUENT L.S.

POST EQ BASIN
NON–POTABLE

P:\PRODUCTION\PROJECTS\WALL ENGINEERING (WE)\WE–055 SHAWNEE NORTHSIDE WASTEWATER TREATMENT PLANT\DWG\PI17_.DWG
6/3/2022 8:15 AM

WALL ENGINEERING
PO BOX 1457, DURANT, OK 74702
OKLAHOMA CA #5413 EXP. JUNE 30, 2023

SUBMITTAL / REVISIONS:

DATE	BY	SUBMITTAL / REVISION
.	.	.

SHAWNEE MUNICIPAL AUTHORITY
WASTEWATER SYSTEM IMPROVEMENTS
SHAWNEE, OKLAHOMA

PROCESS AND INSTRUMENTATION DIAGRAM

PROJECT NO.
SHN–20–01
DATE
06/22
DRAWN BY:
CD
CHECKED BY:
BB
REVIEWED BY:
BB
SCALE:
AS SHOWN

BAR IS ONE INCH ON ORIGINAL DRAWING
0" 1"
IF NOT ONE INCH ON THIS SHEET, ADJUST SCALES ACCORDINGLY

SHEET
P17

REGISTERED PROFESSIONAL ENGINEER
BRUCE BROWN
20995
06-01-2022
OKLAHOMA
BROWN ENGINEERS
501-448-0100

P:\PRODUCTION\PROJECTS\WALL ENGINEERING (WE)\WE-055 SHAWNEE NORTHSIDE WASTEWATER TREATMENT PLANT\DWG\PI18_.DWG
6/3/2022 8:22 AM

PCS

CONTROL PANEL – RTU-D

OPERATOR INTERFACE/ CONTROL DEVICES

POWER SOURCE

FIELD

- YI 2431 STATUS RUNNING
- A 2431 ALARM
- YI 2431 STATUS OVERTEMP
- A 2431 ALARM
- YI 2431 STATUS SEAL FAIL
- A 2511 ALARM
- YI 2511 STATUS OC
- HS 2511 ACTION AM
- HS 2511 ACTION OC
- A 2431 ALARM
- YI 2431 STATUS SEAL FAIL
- A 2431 ALARM
- YI 2431 STATUS OVERTEMP
- YI 2431 STATUS RUNNING
- A 2512 ALARM
- YI 2512 STATUS OC
- HS 2512 ACTION AM
- HS 2512 ACTION OC
- A 2431 ALARM
- YI 2431 STATUS SEAL FAIL
- A 2431 ALARM
- YI 2431 STATUS OVERTEMP
- YI 2431 STATUS RUNNING
- A 2513 ALARM
- YI 2513 STATUS OC
- HS 2513 ACTION AM
- HS 2513 ACTION OC
- FI 2521 NUM FLOW
- FAH 2521 ALARM FLOW
- FR 2521 TREND FLOW

- YY 2431 DI PUMP 1 RUNNING
- YY 2431 DI PUMP 1 OVERTEMP
- YY 2431 DI PUMP 1 SEAL FAIL
- YY 2511 DI OPENED
- YY 2511 DI CLOSED
- YY 2511 DI IN REMOTE
- FY 2511 AI POSITION FEEDBACK
- FY 2511 AO POSITION
- YY 2431 DI PUMP 2 SEAL FAIL
- YY 2431 DI PUMP 2 OVERTEMP
- YY 2431 DI PUMP 2 RUNNING
- YY 2512 DI OPENED
- YY 2512 DI CLOSED
- YY 2512 DI IN REMOTE
- FY 2512 AI POSITION FEEDBACK
- FY 2512 AO POSITION
- YY 2431 DI PUMP 3 SEAL FAIL
- YY 2431 DI PUMP 3 OVERTEMP
- YY 2431 DI PUMP 3 RUNNING
- YY 2513 DI OPENED
- YY 2513 DI CLOSED
- YY 2513 DI IN REMOTE
- FY 2513 AI POSITION FEEDBACK
- FY 2513 AO POSITION
- FY 2521 AI EFFLUENT FLOW

- CB 2441 480VAC–3P 200A/3P — 100HP/F200
- CB 2511 480VAC–3P 15A/3P — 1HP/F20
- CB 2442 480VAC–3P 200A/3P — 100HP/F200
- CB 2431 120VAC–1P 20A/1P — 1.5HP/1F20N
- CB 2512 480VAC–3P 15A/3P — 1HP/F20
- CB 2443 480VAC–3P 200A/3P — 100HP/F200
- CB 2431a 120VAC–1P 20A/1P — 50VA/1F20N
- CB 2513 480VAC–3P 15A/3P — 1HP/F20
- CB 2521 120VAC–1P 20A/1P — 50VA/1F20

VCP–2431
120VAC–1P
NEMA 4X
1.5KVA/1F20N

EFFLUENT PUMP CONTROL PANEL

DI – RUNNING
AI – SPEED FB
DI – READY
DO – START
AO – SPEED SP
DI – FAIL

VFD–2441
480VAC–3P
NEMA 3R
100HP/F200

VFD–2442
480VAC–3P
NEMA 3R
100HP/F200

VFD–2443
480VAC–3P
NEMA 3R
100HP/F200

LIT 2431a 50VA/1F20

TS 2441 OVER TEMP
TB 2441 NEMA 4X
MS 2441 SEAL FAIL
MTR 2441 480VAC–3P
75HP/V. CABLE
FCV 2511 1HP/F20

TS 2442 OVER TEMP
TB 2442 NEMA 4X
MS 2442 SEAL FAIL
480VAC–3P MTR 2442
75HP/V. CABLE
FCV 2512 1HP/F20

TS 2443 OVER TEMP
TB 2443 NEMA 4X
MS 2443 SEAL FAIL
480VAC–3P MTR 2443
75HP/V. CABLE
FCV 2513 1HP/F20

FIT 2521 50VA/1F20

P17 UV

EFFLUENT LIFT STATION

WALL ENGINEERING
PO BOX 1457, DURANT, OK 74702
OKLAHOMA CA #5413 EXP. JUNE 30, 2023

SUBMITTAL / REVISIONS:

DATE	BY	SUBMITTAL / REVISION
.	.	.

SHAWNEE MUNICIPAL AUTHORITY
WASTEWATER SYSTEM IMPROVEMENTS
SHAWNEE, OKLAHOMA

PROCESS AND INSTRUMENTATION DIAGRAM

PROJECT NO.	SHN–20–01
DATE	06/22
DRAWN BY:	CD
CHECKED BY:	BB
REVIEWED BY:	BB
SCALE:	AS SHOWN

BAR IS ONE INCH ON ORIGINAL DRAWING
0' 1'
IF NOT ONE INCH ON THIS SHEET, ADJUST SCALES ACCORDINGLY

SHEET

P18

REGISTERED PROFESSIONAL ENGINEER
BRUCE BROWN
20995
OKLAHOMA
06-01-2022

BROWN ENGINEERS
501-448-0100

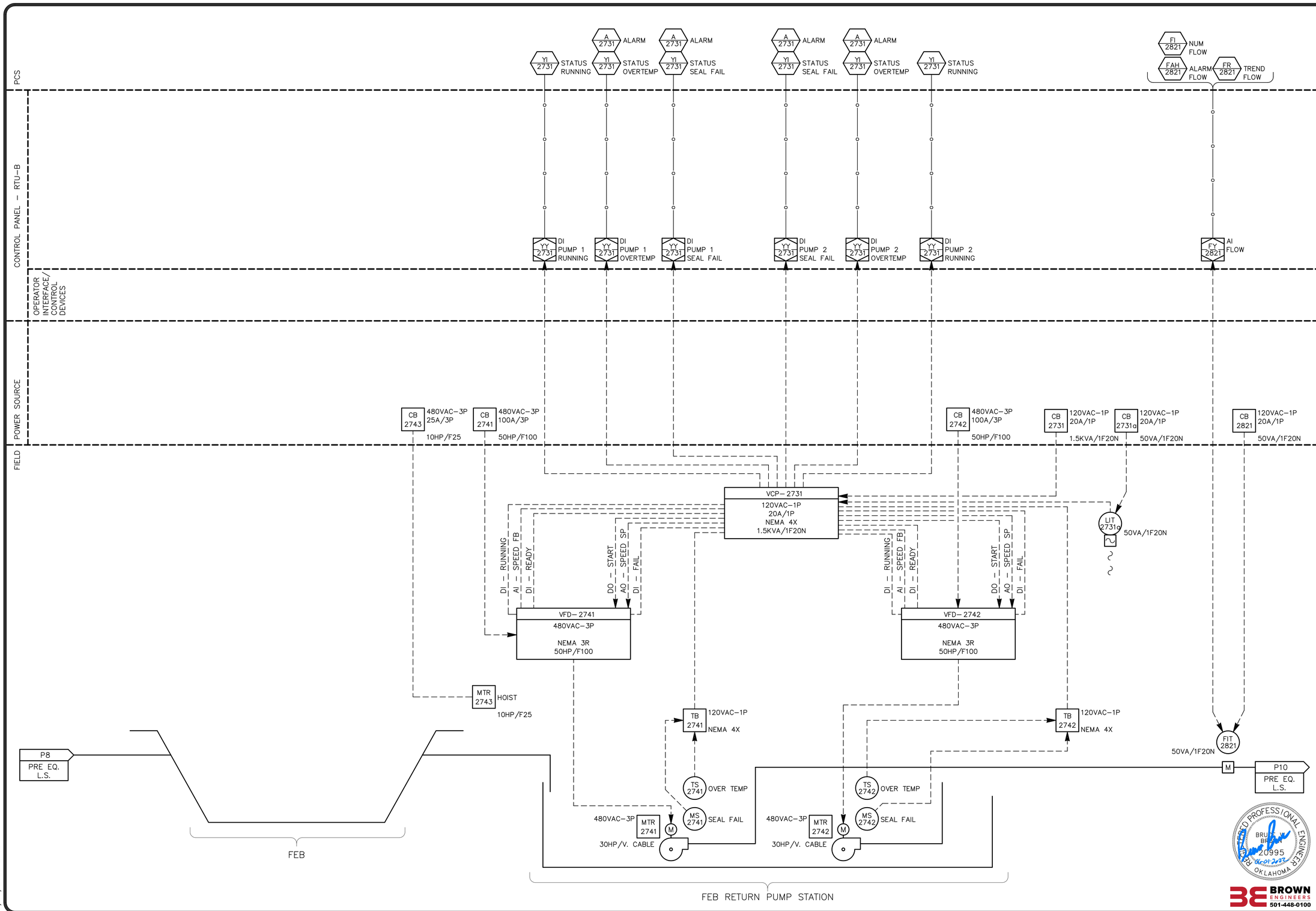

WALL ENGINEERING
PO BOX 1457, DURANT, OK 74702
OKLAHOMA CA #5413 EXP. JUNE 30, 2023

SUBMITTAL / REVISIONS:

DATE	BY	SUBMITTAL / REVISION

SHAWNEE MUNICIPAL AUTHORITY
WASTEWATER SYSTEM IMPROVEMENTS
SHAWNEE, OKLAHOMA

PROCESS AND INSTRUMENTATION DIAGRAM

PROJECT NO. SHN–20–01
DATE 06/22
DRAWN BY: CD
CHECKED BY: BB
REVIEWED BY: BB
SCALE: AS SHOWN

BAR IS ONE INCH ON ORIGINAL DRAWING
0' 1'
IF NOT ONE INCH ON THIS SHEET, ADJUST SCALES ACCORDINGLY

SHEET
P19

P:\PRODUCTION\PROJECTS\WALL ENGINEERING (WE)\WE–055 SHAWNEE NORTHSIDE WASTEWATER TREATMENT PLANT\DWG\PI19_.DWG
5/19/2022 2:42 PM

PCS

CONTROL PANEL

OPERATOR INTERFACE/ CONTROL DEVICES

POWER SOURCE

FIELD

YI 1341 STATUS READY
YI 1341 STATUS RUNNING
KQI 1341 NUM ETA
HS 1341 ACTION RESET ETM
A 1341 ALARM FAILED
HS 1341 ACTION AM

YI 1342 STATUS READY
YI 1342 STATUS RUNNING
KQI 1342 NUM ETA
HS 1342 ACTION RESET ETM
A 1342 ALARM FAILED
HS 1342 ACTION AM

A 1312 ALARM
YI 1312 STATUS OC
HS 1312 ACTION AM
HS 1312 ACTION OC

A 1311 ALARM
YI 1311 STATUS OC
HS 1311 ACTION AM
HS 1311 ACTION OC

A 1313 ALARM
YI 1313 STATUS OC
HS 1313 ACTION AM
HS 1313 ACTION OC

A 1314 ALARM
YI 1314 STATUS OC
HS 1314 ACTION AM
HS 1314 ACTION OC

CB 1341b 480VAC–3P 350A/3P 200HP/F350
CB 1341 480VAC–3P 350A/3P 200HP/F350
CB 1342b 480VAC–3P 350A/3P 200HP/F350
CB 1342 480VAC–3P 350A/3P 200HP/F350
CB 1312 480VAC–3P 15A/3P 1HP/F20
CB 1311 480VAC–3P 15A/3P 1HP/F20
CB 1313 480VAC–3P 15A/3P 1HP/F20
CB 1314 480VAC–3P 15A/3P 1HP/F20

SBR CONTROL PANEL
REFER TO VCP–1031

TB BLOW NEMA 4X

DI – RUNNING
DI – REMOTE
RESET
TEMP HIGH
D/P HIGH
DO – START
DI – FAIL
ENCLOSURE TEMP HIGH
MOTOR TEMP HIGH
SPEED COMMAND
SPEED INDICATION

LCP–1341
480VAC–3P
NEMA 12
200HP/F350

LCP–1342
480VAC–3P
NEMA 12
200HP/F350

TSHb 1341
PDSH 1341
MTR 1341b
480VAC–3P MTR 1341 200HP/F350
TS 1341
PSH 1341
TSHa 1341

TSHb 1342
PDSH 1342
MTR 1342b
480VAC–3P MTR 1342 200HP/F350
TS 1342
PSH 1342
TSHa 1342

FCV 1312 1HP/F20
FCV 1311 1HP/F20
FCV 1313 1HP/F20
FCV 1314 1HP/F20

P21
PROCESS
PROCESS

BLOWER SYSTEM

P:\PRODUCTION\PROJECTS\WALL ENGINEERING (WE)\WE–055 SHAWNEE NORTHSIDE WASTEWATER TREATMENT PLANT\DWG\PI20_.DWG
5/20/2022 3:48 PM

WALL ENGINEERING
PO BOX 1457, DURANT, OK 74702
OKLAHOMA CA #5413 EXP. JUNE 30, 2023

SUBMITTAL / REVISIONS:

DATE	BY	SUBMITTAL / REVISION

SHAWNEE MUNICIPAL AUTHORITY
WASTEWATER SYSTEM IMPROVEMENTS
SHAWNEE, OKLAHOMA

PROCESS AND INSTRUMENTATION DIAGRAM

PROJECT NO. SHN–20–01
DATE 06/22
DRAWN BY: CD
CHECKED BY: BB
REVIEWED BY: BB
SCALE: AS SHOWN

BAR IS ONE INCH ON ORIGINAL DRAWING
0' 1'
IF NOT ONE INCH ON THIS SHEET, ADJUST SCALES ACCORDINGLY

SHEET
P20

REGISTERED PROFESSIONAL ENGINEER
BRUCE BROWN
20995
06-01-2022
OKLAHOMA

BROWN ENGINEERS
501-448-0100

PCS

CONTROL PANEL

OPERATOR INTERFACE/ CONTROL DEVICES

POWER SOURCE

FIELD

YI 1343 STATUS READY
YI 1343 STATUS RUNNING
KQI 1343 NUM ETA
HS 1343 ACTION RESET ETM
A 1343 ALARM FAILED
HS 1343 ACTION AM

YI 1345 STATUS READY
YI 1345 STATUS RUNNING
KQI 1345 NUM ETA
HS 1345 ACTION RESET ETM
A 1345 ALARM FAILED
HS 1345 ACTION AM

A 1317 ALARM
YI 1317 STATUS OC
HS 1317 ACTION AM
HS 1317 ACTION OC

A 1316 ALARM
YI 1316 STATUS OC
HS 1316 ACTION AM
HS 1316 ACTION OC

A 1315 ALARM
YI 1315 STATUS OC
HS 1315 ACTION AM
HS 1315 ACTION OC

A 1318 ALARM
YI 1318 STATUS OC
HS 1318 ACTION AM
HS 1318 ACTION OC

A 1319 ALARM
YI 1319 STATUS OC
HS 1319 ACTION AM
HS 1319 ACTION OC

CB 1341b 480VAC–3P 350A/3P 200HP/F350
CB 1343 480VAC–3P 250A/3P 150HP/F250
CB 1345b 480VAC–3P 350A/3P 200HP/F350
CB 1345 480VAC–3P 250A/3P 150HP/F250
CB 1317 480VAC–3P 15A/3P 1HP/F20
CB 1316 480VAC–3P 15A/3P 1HP/F20
CB 1315 480VAC–3P 15A/3P 1HP/F20
CB 1318 480VAC–3P 15A/3P 1HP/F20
CB 1319 480VAC–3P 15A/3P 1HP/F20

DI – RUNNING
DI – REMOTE
RESET
TEMP HIGH
D/P HIGH
DO – START
DI – FAIL
ENCLOSURE TEMP HIGH
MOTOR TEMP HIGH
SPEED COMMAND
SPEED INDICATION

LCP–1343
480VAC–3P
NEMA 12
150HP/F250

LCP–1345
480VAC–3P
NEMA 12
150HP/F250

REFER TO TB–BLOW

TSHb 1343
PDSH 1343
MTR 1343b
480VAC–3P
MTR 1343
150HP/F250
TS 1343
PSH 1343
TSHa 1343

TSHb 1345
PDSH 1345
MTR 1345b
480VAC–3P
MTR 1345
150HP/F250
TS 1345
PSH 1345
TSHa 1345

FCV 1317 1HP/F20
FCV 1316 1HP/F20
FCV 1315 1HP/F20
FCV 1318 1HP/F20
FCV 1319 1HP/F20

P22
P22

PROCESS

P20

BLOWER SYSTEM

P:\PRODUCTION\PROJECTS\WALL ENGINEERING (WE)\WE–055 SHAWNEE NORTHSIDE WASTEWATER TREATMENT PLANT\DWG\PI21_.DWG
5/19/2022 5:01 PM

WALL ENGINEERING
PO BOX 1457, DURANT, OK 74702
OKLAHOMA CA #5413 EXP. JUNE 30, 2023

SUBMITTAL / REVISIONS:

DATE	BY	SUBMITTAL / REVISION
.	.	.
.	.	.
.	.	.
.	.	.
.	.	.
.	.	.
.	.	.
.	.	.

SHAWNEE MUNICIPAL AUTHORITY
WASTEWATER SYSTEM IMPROVEMENTS
SHAWNEE, OKLAHOMA

PROCESS AND INSTRUMENTATION DIAGRAM

PROJECT NO.
SHN–20–01
DATE
06/22
DRAWN BY:
CD
CHECKED BY:
BB
REVIEWED BY:
BB
SCALE:
AS SHOWN

BAR IS ONE INCH ON ORIGINAL DRAWING
0' 1'
IF NOT ONE INCH ON THIS SHEET, ADJUST SCALES ACCORDINGLY

SHEET
P21

REGISTERED PROFESSIONAL ENGINEER
BRUCE BROWN
20995
06-01-2022
OKLAHOMA

BROWN ENGINEERS
501-448-0100

PCS

CONTROL PANEL

OPERATOR INTERFACE/ CONTROL DEVICES

POWER SOURCE

FIELD

YI 1344 STATUS READY
YI 1344 STATUS RUNNING
KQI 1344 NUM ETA
HS 1344 ACTION RESET ETM
A 1344 ALARM FAILED
HS 1344 ACTION AM

YI 1346 STATUS READY
YI 1346 STATUS RUNNING
KQI 1346 NUM ETA
HS 1346 ACTION RESET ETM
A 1346 ALARM FAILED
HS 1346 ACTION AM

A 1321 ALARM
YI 1321 STATUS OC
HS 1321 ACTION AM
HS 1321 ACTION OC

A 1320 ALARM
YI 1320 STATUS OC
HS 1320 ACTION AM
HS 1320 ACTION OC

A 1323 ALARM
YI 1323 STATUS OC
HS 1323 ACTION AM
HS 1323 ACTION OC

A 1322 ALARM
YI 1322 STATUS OC
HS 1322 ACTION AM
HS 1322 ACTION OC

CB 1344b 480VAC–3P 350A/3P 200HP/F350
CB 1344 480VAC–3P 250A/3P 150HP/F250
CB 1345b 480VAC–3P 350A/3P 200HP/F350
CB 1346 480VAC–3P 250A/3P 150HP/F250
CB 1321 480VAC–3P 15A/3P 1HP/F20
CB 1320 480VAC–3P 15A/3P 1HP/F20
CB 1323 480VAC–3P 15A/3P 1HP/F20
CB 1322 480VAC–3P 15A/3P 1HP/F20

DI – RUNNING
DI – REMOTE
RESET
TEMP HIGH
D/P HIGH
DO – START
DI – FAIL
ENCLOSURE TEMP HIGH
MOTOR TEMP HIGH
SPEED COMMAND
SPEED INDICATION

LCP–1344
480VAC–3P
NEMA 12
150HP/F250

LCP–1346
480VAC–3P
NEMA 12
150HP/F250

REFER TO TB–BLOW

FCV 1321 1HP/F20
FCV 1320 1HP/F20
FCV 1323 1HP/F20
FCV 1322 1HP/F20

PROCESS
PROCESS

P22
P21

TSHb 1344
PDSH 1344
MTR 1344b
480VAC–3P
MTR 1344
150HP/F250
TS 1344
PSH 1344
TSHa 1344

TSHb 1346
PDSH 1346
MTR 1346b
480VAC–3P
MTR 1346
150HP/F250
TS 1346
PSH 1346
TSHa 1346

BLOWER SYSTEM

P:\PRODUCTION\PROJECTS\WALL ENGINEERING (WE)\WE–055 SHAWNEE NORTHSIDE WASTEWATER TREATMENT PLANT\DWG\PI22__.DWG
5/19/2022 5:00 PM

WALL ENGINEERING
PO BOX 1457, DURANT, OK 74702
OKLAHOMA CA #5413 EXP. JUNE 30, 2023

SUBMITTAL / REVISIONS:

DATE	BY	SUBMITTAL / REVISION
.	.	.
.	.	.
.	.	.
.	.	.
.	.	.
.	.	.
.	.	.
.	.	.

SHAWNEE MUNICIPAL AUTHORITY
WASTEWATER SYSTEM IMPROVEMENTS
SHAWNEE, OKLAHOMA

PROCESS AND INSTRUMENTATION DIAGRAM

PROJECT NO.
SHN–20–01
DATE
06/22
DRAWN BY:
CD
CHECKED BY:
BB
REVIEWED BY:
BB
SCALE:
AS SHOWN

BAR IS ONE INCH ON ORIGINAL DRAWING
0' 1'
IF NOT ONE INCH ON THIS SHEET, ADJUST SCALES ACCORDINGLY

SHEET
P22

REGISTERED PROFESSIONAL ENGINEER
BRUCE BROWN
20995
06-01-2022
OKLAHOMA

BROWN ENGINEERS
501-448-0100

PCS

A 2213 ALARM
HS 2213 ACTION AM
FI 2221 NUM FLOW
FAH 2221 ALARM FLOW
YI 2213 STATUS OC
HS 2213 ACTION OC
FR 2221 TREND FLOW
A 2211 ALARM
HS 2211 ACTION AM
YI 2211 STATUS OC
HS 2211 ACTION OC
A 2214 ALARM
HS 2214 ACTION AM
YI 2214 STATUS OC
HS 2214 ACTION OC
YI 2241 STATUS READY
HS 2241 ACTION RESET ETM
YI 2241 STATUS RUNNING
SI 2241 NUM SPEED
QS 2241 SP SPEED
KQI 2241 NUM ETA
A 2241 ALARM FAILED
HS 2241 ACTION AM
YI 2242 STATUS READY
HS 2242 ACTION RESET ETM
YI 2242 STATUS RUNNING
SI 2242 NUM SPEED
QS 2242 SP SPEED
KQI 2242 NUM ETA
A 2242 ALARM FAILED
HS 2242 ACTION AM
A 2215 ALARM
HS 2215 ACTION AM
YI 2215 STATUS OC
HS 2215 ACTION OC
A 2216 ALARM
HS 2216 ACTION AM
YI 2216 STATUS OC
HS 2216 ACTION OC
FI 2222 NUM FLOW
FAH 2222 ALARM FLOW
FR 2222 TREND FLOW
A 2212 ALARM
HS 2212 ACTION AM
YI 2212 STATUS OC
HS 2212 ACTION OC

CONTROL PANEL – RTU–E

YY 2213 DI OPENED
YY 2213 DI CLOSED
YY 2213 DI IN REMOTE
FY 2213 AI POSITION FEEDBACK
FY 2213 AO POSITION
YY 2211 DI OPENED
YY 2211 DI CLOSED
YY 2211 DI IN REMOTE
FY 2211 AI POSITION FEEDBACK
FY 2211 AO POSITION
YY 2214 DI OPENED
YY 2214 DI CLOSED
YY 2214 DI IN REMOTE
FY 2214 AI POSITION FEEDBACK
FY 2214 AO POSITION
YY 2215 DI OPENED
YY 2215 DI CLOSED
YY 2215 DI IN REMOTE
FY 2215 AI POSITION FEEDBACK
FY 2215 AO POSITION
YY 2216 DI OPENED
YY 2216 DI CLOSED
YY 2216 DI IN REMOTE
FY 2216 AI POSITION FEEDBACK
FY 2216 AO POSITION
YY 2212 DI OPENED
YY 2212 DI CLOSED
YY 2212 DI IN REMOTE
FY 2212 AI POSITION FEEDBACK
FY 2212 AO POSITION

OPERATOR INTERFACE/ CONTROL DEVICES

POWER SOURCE

CB 2213 480VAC–3P 15A/3P 1HP/F20
CB 2241 480VAC–3P 30A/3P 10HP/F30
CB 2211 480VAC–3P 15A/3P 1HP/F20
CB 2214 120VAC–1P 15A/3P 1HP/F20
CB 2221 120VAC–1P 20A/1P 50VA/1F20N
CB 2215 480VAC–3P 15A/3P 1HP/F20
CB 2242 480VAC–3P 30A/3P 10HP/F30
CB 2216 480VAC–3P 15A/3P 1HP/F20
CB 2212 480VAC–3P 15A/3P 1HP/F20
CB 2222 120VAC–1P 20A/1P 50VA/1F20N

FIELD

REFER TO VCP–1831/1832

BELT PRESS CONTROL PANEL

DI – RUNNING
AI – SPEED FB
DI – REMOTE
DO – START
AO – SPEED SP
DI – FAIL

VFD–2241
480VAC–3P
NEMA 3R
10HP/F30

VFD–2242
480VAC–3P
NEMA 3R
10HP/F30

FCV 2213 1HP/F20
FCV 2211 1HP/F20
FCV 2214 1HP/F20
FIT 2221 50VA/1F20N
BELT PRESS #1
FCV 2216 1HP/F20
FCV 2215 1HP/F20
FCV 2212 1HP/F20
FIT 2222 50VA/1F20N
BELT PRESS #2

P15 DIGESTER
P16 DIGESTER
480VAC–3P 7.5HP/F20 MTR 2241
480VAC–3P 7.5HP/F20 MTR 2242

SLUDGE FEED PUMPS

WALL ENGINEERING
PO BOX 1457, DURANT, OK 74702
OKLAHOMA CA #5413 EXP. JUNE 30, 2023

SUBMITTAL / REVISIONS:

DATE	BY	SUBMITTAL / REVISION
.	.	.

SHAWNEE MUNICIPAL AUTHORITY
WASTEWATER SYSTEM IMPROVEMENTS
SHAWNEE, OKLAHOMA

PROCESS AND INSTRUMENTATION DIAGRAM

PROJECT NO.
SHN–20–01
DATE
06/22
DRAWN BY:
CD
CHECKED BY:
BB
REVIEWED BY:
BB
SCALE:
AS SHOWN

BAR IS ONE INCH ON ORIGINAL DRAWING
0' 1'
IF NOT ONE INCH ON THIS SHEET, ADJUST SCALES ACCORDINGLY

SHEET
P23

REGISTERED PROFESSIONAL ENGINEER
BRUCE BROWN
20995
06-01-2022
OKLAHOMA

BROWN ENGINEERS
501-448-0100

P:\PRODUCTION\PROJECTS\WALL ENGINEERING (WE)\WE–055 SHAWNEE NORTHSIDE WASTEWATER TREATMENT PLANT\DWG\PI23_.DWG
6/3/2022 8:37 AM

P:\PRODUCTION\PROJECTS\WALL ENGINEERING (WE)\WE-055 SHAWNEE NORTHSIDE WASTEWATER TREATMENT PLANT\DWG\PI24_.DWG
5/20/2022 7:40 AM

PCS

CONTROL PANEL

OPERATOR INTERFACE/ CONTROL DEVICES

POWER SOURCE

FIELD

SI 2141 NUM SPEED

QS 2141 SP SPEED

YI 2141 STATUS RUNNING

KOI 2141 NUM ETA

HS 2141 ACTION RESET ETM

SI 2142 NUM SPEED

QS 2142 SP SPEED

YI 2142 STATUS RUNNING

KOI 2142 NUM ETA

HS 2142 ACTION RESET ETM

CB 2141 120VAC–1P 20A/1P

50VA/1F20N

CB 2142 120VAC–1P 20A/1P

50VA/1F20N

REFER TO VCP–1831/1832

BELT PRESS CONTROL PANEL

SPEED
SPEED FB
START
RUNNING
FAIL
REMOTE

SIC 2141

50VA/1F20N

MAN. STROKE

M

POLYMER TOTE

POLYMER TOTE

SPEED
SPEED FB
START
RUNNING
FAIL
REMOTE

SIC 2142

50VA/1F20N

MAN. STROKE

M

WALL ENGINEERING
PO BOX 1457, DURANT, OK 74702
OKLAHOMA CA #5413 EXP. JUNE 30, 2023

SUBMITTAL / REVISIONS:

DATE	BY	SUBMITTAL / REVISION
.	.	.
.	.	.
.	.	.
.	.	.
.	.	.
.	.	.
.	.	.
.	.	.

SHAWNEE MUNICIPAL AUTHORITY
WASTEWATER SYSTEM IMPROVEMENTS
SHAWNEE, OKLAHOMA

PROCESS AND INSTRUMENTATION DIAGRAM

PROJECT NO.
SHN–20–01

DATE
06/22

DRAWN BY:
CD

CHECKED BY:
BB

REVIEWED BY:
BB

SCALE:
AS SHOWN

BAR IS ONE INCH ON ORIGINAL DRAWING
0" 1"
IF NOT ONE INCH ON THIS SHEET, ADJUST SCALES ACCORDINGLY

SHEET

P24

REGISTERED PROFESSIONAL ENGINEER
BRUCE BROWN
20995
06-01-2022
OKLAHOMA

BROWN ENGINEERS
501-448-0100

P:\PRODUCTION\PROJECTS\WALL ENGINEERING (WE)\WE-055 SHAWNEE NORTHSIDE WASTEWATER TREATMENT PLANT\DWG\PI25_.DWG
5/20/2022 7:47 AM

PCS

CONTROL PANEL RTU-E

OPERATOR INTERFACE/ CONTROL DEVICES

POWER SOURCE

FIELD

QS 1831 SP SPEED
QS 1831 SP SPEED
SI 1831 NUM SPEED
YA 1831 ALARM FAILED
HS 1831 ACTION RESET ETM
YI 1831 STATUS RUNNING
KQI 1831 NUM ETA

SY 1831 AO BELT PRESS SPEED
SY 1831 AI BELT PRESS SPEED
YY 1831 DI BELT PRESS ALARM
YY 1831 DI BELT PRESS RUNNING

QS 1832 SP SPEED
QS 1832 SP SPEED
SI 1832 NUM SPEED
YA 1832 ALARM FAILED
HS 1832 ACTION RESET ETM
YI 1832 STATUS RUNNING
KQI 1832 NUM ETA

SY 1832 AO BELT PRESS SPEED
SY 1832 AI BELT PRESS SPEED
YY 1832 DI BELT PRESS ALARM
YY 1832 DI BELT PRESS RUNNING

HS 1845 ACTION RESET ETM
YI 1845 STATUS RUNNING
KQI 1845 NUM ETA

YY 1845 DI CONVEYOR RUNNING

CB 1802 480VAC-3P 20A/3P 1HP/F20
CB 1801 480VAC-3P 20A/3P 1HP/F20
CB 1831 480VAC-3P 20A/3P 12KVA/F20
CB 1832 480VAC-3P 20A/3P 12KVA/F20
CB 1845 480VAC-3P 25A/3P 10HP/F25

VCP-1831
480VAC-3P
NEMA 4X
12KVA/F20

VCP-1832
480VAC-3P
NEMA 4X
12KVA/F20

FVNR-1845
480VAC-3P
NEMA SIZE 1
NEMA 4X
10HP/F25

FCV 1801 1HP/F20
FCV 1802 1HP/F20

P17 NON POT

P23 SLUDGE PUMPS

MTR 1841 480VAC-3P 5HP/F20
MTR 1842 480VAC-3P 2HP/F20
MTR 1843 480VAC-3P 5HP/F20
MTR 1844 480VAC-3P 2HP/F20
MTR 1845 480VAC-3P 10HP/F25

JB 1831
JB 1832

HS 1845 E-STOP

BELT PRESS #1
BELT PRESS #2
CONVEYOR

WALL ENGINEERING
PO BOX 1457, DURANT, OK 74702
OKLAHOMA CA #5413 EXP. JUNE 30, 2023

SUBMITTAL / REVISIONS:

DATE	BY	SUBMITTAL / REVISION

SHAWNEE MUNICIPAL AUTHORITY
WASTEWATER SYSTEM IMPROVEMENTS
SHAWNEE, OKLAHOMA

PROCESS AND INSTRUMENTATION DIAGRAM

PROJECT NO. SHN-20-01
DATE 06/22
DRAWN BY: CD
CHECKED BY: BB
REVIEWED BY: BB
SCALE: AS SHOWN

BAR IS ONE INCH ON ORIGINAL DRAWING
0' 1'
IF NOT ONE INCH ON THIS SHEET, ADJUST SCALES ACCORDINGLY

REGISTERED PROFESSIONAL ENGINEER BRUCE BROWN 20995 OKLAHOMA 06-01-2022

BROWN ENGINEERS 501-448-0100

SHEET
P25

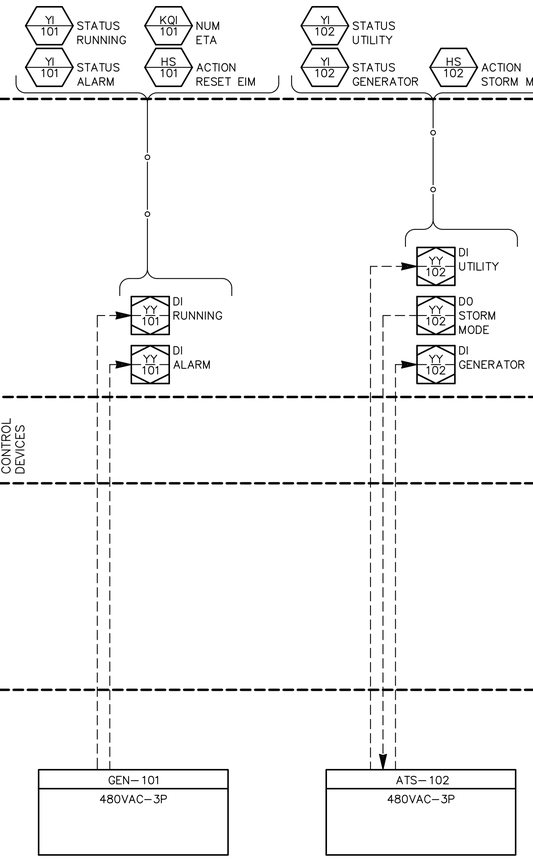

WALL ENGINEERING
PO BOX 1457, DURANT, OK 74702
OKLAHOMA CA #5413 EXP. JUNE 30, 2023

SUBMITTAL / REVISIONS:

DATE	BY	SUBMITTAL / REVISION
.	.	.
.	.	.
.	.	.
.	.	.
.	.	.
.	.	.
.	.	.

SHAWNEE MUNICIPAL AUTHORITY
WASTEWATER SYSTEM IMPROVEMENTS
SHAWNEE, OKLAHOMA

PROCESS AND INSTRUMENTATION DIAGRAM

PROJECT NO.
SHN-20-01

DATE
06/22

DRAWN BY:
CD

CHECKED BY:
BB

REVIEWED BY:
BB

SCALE:
AS SHOWN

BAR IS ONE INCH ON ORIGINAL DRAWING
0" 1"
IF NOT ONE INCH ON THIS SHEET, ADJUST SCALES ACCORDINGLY

SHEET
P26

BROWN ENGINEERS
501-448-0100

P:\PRODUCTION\PROJECTS\WALL ENGINEERING (WE)\WE-055 SHAWNEE NORTHSIDE WASTEWATER TREATMENT PLANT\DWG\P126_.DWG
5/20/2022 7:48 AM

PLUMBING LEGEND

ABBREVIATION OR SYMBOL	DESCRIPTION
DCW	DOMESTIC COLD WATER
DHW	DOMESTIC HOT WATER
DHWC	DOMESTIC HOT WATER RETURN
SS	SANITARY SEWER
GW	SANITARY - GREASE WASTE
AW	SANITARY - ACID WASTE
SD	STORM DRAIN
	VENT
G	NATURAL GAS
CD	CONDENSATE DRAIN

VALVING

BFV BFV	BUTTERFLY VALVE (lever operator)
BFV BFV	BUTTERFLY VALVE (wheel operator)
GV GV	GATE VALVE
CHK CHK	CHECK VALVE
GB GB	GLOBE VALVE
ST ST	STRAINER (Y-TYPE)
BV BV	BALL VALVE

* NOT ALL SYMBOLS MAY APPLY TO THIS PROJECT

ABBREVIATION OR SYMBOL	DESCRIPTION
	FLEXIBLE PIPING
	EXISTING PIPING TO REMAIN (refer to line designation)
	EXISTING TO BE REMOVED (back to point indicated)
	CONNECT TO EXISTING
	BELOW GRADE PIPING (fine dash)

THREADED WATER & GAS PIPING

	PIPE DOWN
	PIPE UP
	THREADED TEE DOWN
	THREADED TEE UP
	BRANCH - BOTTOM OF PIPE
	BRANCH - TOP OF PIPE
	90 DEGREE ELBOW
	45 DEGREE ELBOW
	TEE
	UNION

ABBREVIATION OR SYMBOL	DESCRIPTION
FFE AFF AFG	FINISH FLOOR ELEVATION ABOVE FINISH FLOOR ABOVE FINISH GRADE
	PIPE PENETRATION (through floor/wall/etc)
	DCW ROUGH-IN
	DHW ROUGH-IN

LONG RADIUS SEWER & VENT PIPING

	PIPE DOWN
	PIPE UP
	PIPE WYE DOWN
	PIPE WYE UP
	BRANCH - BOTTOM OF PIPE
	BRANCH - TOP OF PIPE
	ELBOW
	45 DEGREE ELBOW
	WYE WITH EIGHTH BEND
	UNION

PLUMBING GENERAL NOTES:

1. ALL PLUMBING WORK SHALL COMPLY WITH ALL LOCAL CODES, AUTHORITIES HAVING JURISDICTION, DRAWINGS AND SPECIFICATIONS. IF DISCREPANCIES ARE FOUND – THE MOST STRINGENT REQUIREMENT SHALL GOVERN WORK.
2. ALL DRAWINGS ARE DIAGRAMMATIC AND INDICATE THE GENERAL ARRANGEMENTS OR GEOMETRIC RELATIONSHIPS OF EQUIPMENT AND SERVICES. THEY ARE NOT INTENDED TO SPECIFY OR SHOW EVERY OFFSET, FITTING, OR COMPONENT. CONTRACTOR SHALL NOT SCALE DRAWINGS. EQUIPMENT SCHEDULES SHALL TAKE PRECEDENCE OVER CONFLICTING DRAWING INFORMATION. DRAWINGS SPECIFIC TO THIS DISCIPLINE DO NOT LIMIT THE RESPONSIBILITY OF WORK REQUIRED BY CONTRACT DOCUMENTS. REFER TO COMPLETE PROJECT DOCUMENTS FOR COORDINATION WITH OTHER DISCIPLINES.
3. EXCEPT WHERE MODIFIED BY SPECIFIC NOTATION TO THE CONTRARY, IT SHALL BE UNDERSTOOD THAT THE INDICATION AND/OR DESCRIPTION OF ANY ITEM IN THE DRAWINGS OR SPECIFICATIONS CARRIES WITH IT THE INSTRUCTION TO PROVIDE THE ITEM, REGARDLESS OF WHETHER OR NOT THIS INSTRUCTION IS EXPLICITLY STATED AS PART OF THE INDICATION OR DESCRIPTION.
4. REFER TO PLUMBING SCHEDULES AND SPECIFICATIONS FOR BASIS OF DESIGN, ACCEPTABLE MANUFACTURERS, AND MODELS OF PLUMBING FIXTURES AND EQUIPMENT.
5. PROVIDE CLEANOUTS IN ALL SANITARY LINES, WHETHER SHOWN OR NOT, AT INTERVALS NOT TO EXCEED 100' AND AT EACH CHANGE IN DIRECTION GREATER THAN 45 DEGREES.
6. PROVIDE A TWO–WAY CLEANOUT AT THE JUNCTION OF ALL BUILDING DRAINS AND BUILDING SEWERS.
7. REFER TO SPECIFICATIONS FOR INSULATION REQUIREMENTS.
8. ALL SANITARY LINES 2 1/2" AND SMALLER SHALL HAVE A MINIMUM SLOPE OF 1/4" PER FOOT. ALL SANITARY LINES 3" AND LARGER SHALL HAVE A MINIMUM SLOPE OF 1/8" PER FOOT. VERIFY EXISTING SANITARY LINE ELEVATIONS AND COORDINATE INSTALLATION TO ASSURE PROPER FLOW.
9. SEAL ALL PIPE PENETRATIONS THROUGH WALLS, ROOF, AND FLOOR AIR AND WATER TIGHT.
10. ALL FLOOR DRAINS SHALL HAVE DEEP SEAL TRAPS, 4" DEEP SEAL MINIMUM UNLESS NOTED OTHERWISE. PROVIDE A TRAP GUARD EQUAL TO PROSET OR SURE SEAL SIZED ACCORDING TO MANUFACTURER'S RECOMMENDATIONS FOR ALL FLOOR DRAINS.
11. ALL PIPE DROPS FROM CEILING PLENUM TO BELOW FLOOR SHALL BE MADE IN FURR–OUTS AT COLUMNS, IN WEBB OF BEAMS AT COLUMNS, OR IN WALLS UNLESS SHOWN OTHERWISE.
12. ALL EXPOSED OR ACCESSIBLE P–TRAPS SHALL BE CHROME PLATED AND PROVIDED WITH BOTTOM CLEANOUT PLUGS. ALL EXPOSED PLUMBING TRIM SHALL BE CHROME PLATED.
13. PROVIDE TIGHT–FITTED MOLDED PLASTIC INSULATION AT ALL EXPOSED WATER AND DRAIN PIPING FOR ADA FIXTURES PER ANSI A117.1 AND ADA REQUIREMENTS. FINISH SHALL BE WHITE.
14. ALL DOMESTIC WATER SHALL BE ROUTED ABOVE CEILING. ALL DOMESTIC WATER ROUTED IN EXTERIOR WALLS SHALL BE INSTALLED ON CONDITIONED SIDE OF ROOM INSULATION.
15. MAINTAIN A MINIMUM OF 10 ' BETWEEN ALL HVAC FRESH AIR INTAKES AND PLUMBING VENTS. COORDINATE WITH MECHANICAL BEFORE INSTALLATION OF VTRs.
16. CONTRACTOR SHALL VISIT SITE AND VERIFY CONDITIONS PRIOR TO BIDDING.
17. CONTRACTOR SHALL VERIFY EXACT LOCATIONS OF UTILITIES AND INVERTS PRIOR TO ROUTING SERVICES. CONTRACTOR SHALL COORDINATE ALL SANITARY SEWER, FIRE, GAS AND DOMESTIC WATER LINES WITH CIVIL DRAWINGS. SEE CIVIL DRAWINGS FOR CONTINUATION OF ALL UTILITY LINES.
18. CONTRACTOR SHALL PAY ALL UTILITY FEES AND CHARGES IN THE CONTRACT.
19. PROVIDE ALL FITTINGS, TRANSITIONS, COUPLINGS, ADAPTORS, UNIONS, AND OTHER ACCESSORIES NEEDED TO COMPLETE CONNECTIONS AND PROVIDE FOR PROPER OPERATION OF PLUMBING FIXTURES AND PLUMBING EQUIPMENT.
20. FIRE STOP ALL PIPE PENETRATIONS THROUGH RATED WALLS. REFER TO SPECIFICATIONS.
21. PIPING SHALL NOT BE ROUTED OVER ELECTRICAL ROOMS, COMPUTER ROOMS, ELECTRICAL PANELS, OR ELECTRICAL EQUIPMENT UNLESS OTHERWISE NOTED.
22. PROVIDE LEAD–FREE PRESSURE REDUCING VALVE AT DOMESTIC ENTRANCE TO PROVIDE ADEQUATE PRESSURE AT ALL OUTLETS IN ACCORDANCE WITH THE SYSTEM REQUIREMENTS.
23. EACH FIXTURE GROUP OR BATTERY OF FIXTURES SHALL BE PROVIDED WITH A SHUTOFF VALVE IN THE DOMESTIC HOT AND COLD WATER SUPPLY LINES ABOVE CEILING. VALVES SHALL BE ACCESSIBLE FROM ROOM BELOW.
24. PAINT EXPOSED PIPING AND PIPE INSULATION. COORDINATE WITH OWNER FOR FINAL COLOR.
25. ALL UNDER FLOOR WATER PIPING SHALL BE PROVIDED WITH A POLYETHYLENE SLEEVE. EXTEND SLEEVE UP THROUGH FLOOR SLAB AND SEAL AIR AND WATER TIGHT.
26. PIPING THROUGH FOUNDATION WALLS AND FOOTINGS SHALL BE SLEEVED AS PER STRUCTURAL DETAILS.
27. ALL PIPE CONNECTIONS BETWEEN DISSIMILAR METALS SHALL BE MADE THROUGH DIELECTRIC UNIONS.
28. ALL PLUMBING COMPONENTS WITH ELECTRICAL REQUIREMENTS SHALL BE INSTALLED WITH THE ELECTRICAL INFRASTRUCTURE NECESSARY TO PROVIDE A FULLY FUNCTIONING SYSTEM. IF NOT SPECIFICALLY SHOWN ON ELECTRICAL SCHEDULE, PLUMBING FIXTURES REQUIRING ELECTRICAL SERVICE SHALL BE FED FROM BREAKER OF ADEQUATE CAPACITY.
29. REFER TO PLUMBING SPECIFICATIONS FOR PIPE MATERIAL AND INSULATION REQUIREMENTS.
30. EXACT LOCATION OF ALL EQUIPMENT AND PIPING SHALL BE COORDINATED WITH OTHER TRADES. CEILING MOUNTED SPRINKLER AND LIGHTING SHALL TAKE PRECEDENCE OVER CEILING MOUNTED MECHANICAL REQUIREMENTS.
31. PROVIDE FABRICATED EXPANSION LOOP OR MANUFACTURED EXPANSION DEVICE ON ALL PIPING SYSTEMS CROSSING BUILDING EXPANSION JOINTS.

PLUMBING -- FIXTURE SCHEDULE

TAG	DESCRIPTION	MANUFACTURER	MODEL	ACCESSORIES	FAUCETS & FITTINGS	STOPS	TRAPS	MOUNTING	BRANCH CONNECTIONS DCW	BRANCH CONNECTIONS DHW	BRANCH CONNECTIONS SS	REMARKS
COTG	CLEAN OUT TO GRADE	ZURN	Z1400	-	-	-	-	AT GRADE	0"	0"	4"	SHALL BE PROVIDED WITH HEAVY DUTY TOP.
EYEWASH	WALL-MOUNT EYEWASH	BRADLEY	S19224SC	EEMAX AP036480 EE (WATER HEATER)	-	-	-	WALL	1 1/4"	0"	1 1/4"	SEE CIVIL PLANS FOR WATER SUPPLY AND DRAINS FOR EYEWASH.
FCO	FLOOR CLEANOUT	ZURN	ZN1400	-	-	-	-	FLOOR	0"	0"	4"	MATCH SIZE TO SANITARY LINE SERVED.
FD1	FLOOR DRAIN - 5" STRAINER	ZURN	Z415BZ-DP	PROSET TRAP GUARD	-	-	CAST IRON	FLOOR	0"	0"	2"	
FD2	FLOOR DRAIN - 6" STRAINER	ZURN	ZS415-6BS	PROSET TRAP GUARD	STAINLESS STEEL STRAINER	-	CAST IRON	FLOOR	0"	0"	2"	
HB1	EXPOSED SILL HYDRANT	PRIER	P-166	-	-	BALL VALVE	-	WALL	3/4"	0"	0"	HYDRANT SHALL BE WALL-MOUNTED, EXPOSED, ANTI-SIPHON, WITH WHEEL HANDLE
HB2	WALL HYDRANT - FROST PROOF	PRIER	C144	-	-	BALL VALVE	-	WALL	3/4"	3/4"	0"	HYDRANT SHALL BE EXPOSED, FREEZE-PROOF, ANTI-SIPHON, WITH WHEEL HANDLE.
P1	WATER CLOSET - ADA HEIGHT	ZURN	Z5665	-	Z6000AV-WS1	INTEGRAL	INTEGRAL	FLOOR	1"	0"	4"	SEAT SHALL HAVE CHECK HINGE WITH STAINLESS STEEL HARDWARE.
P2	WALL MOUNT LAVATORY	ZURN	Z5310	-	Z82200-XL-21M	-	-	WALL	1/2"	1/2"	2"	
P3	KITCHEN SINK - DOUBLE COMPARTMENT	JUST MFG.	DL-2233-A-GR-M	BADGER 5XP GARBAGE DISPOSAL	J-902 (FAUCET W/SPRAYER)	MCGUIRE COMMERCIAL	MCGUIRE COMMERCIAL	COUNTER	1/2"	1/2"	2"	
P4	KITCHEN SINK - DOUBLE COMPARTMENT	JUST MFG.	DL-2233-A-GR-M	-	ZURN Z831C4-XL	MCGUIRE COMMERCIAL	MCGUIRE COMMERCIAL	COUNTER	1/2"	1/2"	2"	
P5	MOP SINK	STERN WILLIAMS	SB900	MOP HANGER; HOSE AND HOSE BRACKET; STAINLESS STEEL SPLASH GUARD; GRID DRAIN	SERVICE FAUCET	INTEGRAL	CAST IRON	FLOOR	1/2"	1/2"	3"	
P6	SHOWER - BUILT UP	CHICAGO FAUCETS	SH-TP1-01-000	24" WALL MOUNT SLIDE BAR	SH-TP1-00-021 HAND SPRAYER	INTEGRAL	-	WALL	1/2"	1/2"	2"	SHALL BE ADA COMPLIANT. PROVIDE WITH THERMOSTATIC MIXING VALVE.

1 ALL FIXTURES SHALL BE INSTALLED AS PER MANUFACTURER'S RECOMMENDATION.
2 CONTRACTOR IS RESPONSIBLE FOR COORDINATING FAUCET SPACING AND STYLE WITH MOUNTING HOLES IN FIXTURE.
3 ALL FIXTURES WITH HOT WATER FEEDS SHALL BE PROVIDED WITH THERMOSTATIC MIXING VALVE INSTALLED AS PER MANUFACTURER'S RECOMMENDATION.
4 CONTRACTOR SHALL INSTALL ALL PLUMBING FIXTURES IN COMPLIANCE WITH ALL APPLICABLE CODES AND ALL AUTHORITIES HAVING JURISDICTION.

PLUMBING -- EQUIPMENT SCHEDULE

TAG	MARK	DESCRIPTION	MANUFACTURER	MODEL	MOUNTING	TANK VOLUME	BRANCH CONNECTIONS DCW	BRANCH CONNECTIONS DHW	DESIGN EWT	WH SETPOINT	TANKLESS DESIGN FLOW RATE	ELECTRICAL DATA VOLTAGE	ELECTRICAL DATA PHASE	ELECTRICAL DATA WATTAGE	REMARKS
EWH	1	THREE PHASE COMMERCIAL ELECTRIC TANKLESS WATER HEATER	EEMAX	AP036480	WALL	0 gal	1/2"	1/2"	50 °F	80 °F	3 GPM	480 V	3	36.0 kW	WATER HEATER SHALL BE FACTORY SET FOR EMERGENCY EYE/FACE WASH SERVICE. PROVIDE WITH NEMA 4X ENCLOSURE AND DISCHARGE THERMOMETER.
WH	1	COMMERCIAL ELECTRIC TANK WATER HEATER	A.O. SMITH	DRE-80	HOUSEKEEPING PAD	80 gal	1"	1"	50 °F	120 °F	0 GPM	480 V	3	12.3 kW	REFER TO WATER HEATER DETAIL.

WALL ENGINEERING
PO BOX 1457, DURANT, OK 74702
OKLAHOMA CA #5413 EXP. JUNE 30, 2023

SUBMITTAL / REVISIONS:

DATE	BY	SUBMITTAL / REVISION

SHAWNEE MUNICIPAL AUTHORITY
WASTEWATER SYSTEM IMPROVEMENTS
SHAWNEE, OKLAHOMA

PLUMBING
LEGEND AND NOTES

PROJECT NO.
SHN–20–01
DATE
06/22
DRAWN BY:
CD
CHECKED BY:
BB
REVIEWED BY:
BB
SCALE:
AS SHOWN

BAR IS ONE INCH ON ORIGINAL DRAWING
0" 1"
IF NOT ONE INCH ON THIS SHEET, ADJUST SCALES ACCORDINGLY

SHEET
PL1

MELANIE C. RICHARDSON
No. 31780
LICENSED PROFESSIONAL ENGINEER
OKLAHOMA
5-17-22
BROWN ENGINEERS
501-448-0100

P:\PRODUCTION\PROJECTS\WALL ENGINEERING (WE)\WE–055 SHAWNEE NORTHSIDE WASTEWATER TREATMENT PLANT\DWG\PL1.DWG
5/20/2022 2:29 PM

PLUMBING -- FIXTURE CONNECTION Ø

TAG	DESCRIPTION	BRANCH CONNECTIONS		
		DCW	DHW	SS
COTG	CLEAN OUT TO GRADE	0"	0"	4"
EYEWASH	WALL-MOUNT EYEWASH	1 1/4"	0"	1 1/4"
FCO	FLOOR CLEANOUT	0"	0"	4"
FD1	FLOOR DRAIN - 5" STRAINER	0"	0"	2"
FD2	FLOOR DRAIN - 6" STRAINER	0"	0"	2"
HB1	EXPOSED SILL HYDRANT	3/4"	0"	0"
HB2	WALL HYDRANT - FROST PROOF	3/4"	3/4"	0"
P1	WATER CLOSET - ADA HEIGHT	1"	0"	4"
P2	WALL MOUNT LAVATORY	1/2"	1/2"	2"
P3	KITCHEN SINK - DOUBLE COMPARTMENT	1/2"	1/2"	2"
P4	KITCHEN SINK - DOUBLE COMPARTMENT	1/2"	1/2"	2"
P5	MOP SINK	1/2"	1/2"	3"
P6	SHOWER - BUILT UP	1/2"	1/2"	2"

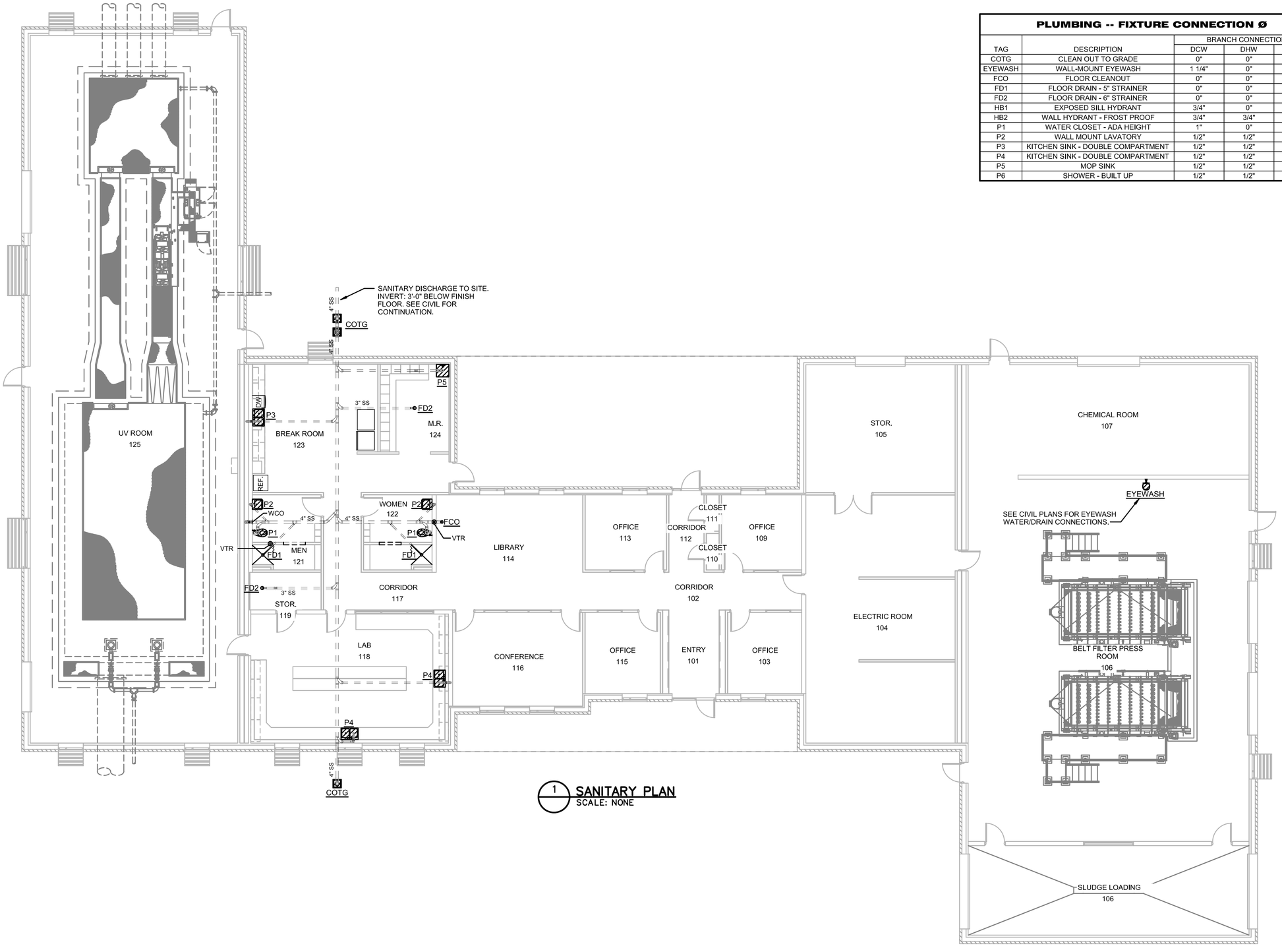

1 SANITARY PLAN
SCALE: NONE

WALL ENGINEERING
PO BOX 1457, DURANT, OK 74702
OKLAHOMA CA #5413 EXP. JUNE 30, 2023

SUBMITTAL / REVISIONS:

DATE	BY	SUBMITTAL / REVISION
.	.	.
.	.	.
.	.	.
.	.	.
.	.	.
.	.	.
.	.	.

SHAWNEE MUNICIPAL AUTHORITY
WASTEWATER SYSTEM IMPROVEMENTS
SHAWNEE, OKLAHOMA

PLUMBING
SANITARY PLAN

PROJECT NO.	SHN–20–01
DATE	06/22
DRAWN BY:	CD
CHECKED BY:	BB
REVIEWED BY:	BB
SCALE:	AS SHOWN

BAR IS ONE INCH ON ORIGINAL DRAWING
0' 1'
IF NOT ONE INCH ON THIS SHEET, ADJUST SCALES ACCORDINGLY

SHEET
PL2

MELANIE C. RICHARDSON
No. 31764
OKLAHOMA
BROWN ENGINEERS
501-448-0100

P:\PRODUCTION\PROJECTS\WALL ENGINEERING (WE)\WE-055 SHAWNEE NORTHSIDE WASTEWATER TREATMENT PLANT\DWG\PL2.DWG
6/3/2022 8:57 AM

DOMESTIC WATER GENERAL NOTES:

1. PROVIDE LEAD–FREE ISOLATION VALVE FOR EACH RESTROOM MAIN AND EACH BRANCH MAIN SERVING A BATTERY OF FIXTURES.
2. PERMANENTLY LABEL ALL VALVES TO INDICATED AREA THAT VALVE SERVES.
3. PROVIDE WATER HAMMER ARRESTOR AT END OF ALL DCW AND DHW BRANCH LINES BEFORE LAST FIXTURE. REFER TO DETAILS FOR WATER HAMMER ARRESTOR SCHEDULE.
4. ROUTE ALL DOMESTIC WATER LINES IN ADMIN/LAB SPACES CONCEALED ABOVE CEILING. WHERE DOMESTIC WATER LINES MUST BE ROUTED EXPOSED, PAINT EXPOSED PIPE AND COORDINATE WITH ARCHITECT FOR COLOR.

 # KEYED NOTES:

1. RPZAs FOR FILTER PRESS SYSTEM AND DOMESTIC WATER SYSTEM AT THIS LOCATION. REFER TO CIVIL FOR SPECIFICATION OF RPZA SERVING FILTER PRESS WATER SYSTEM.
2. UTILITY WASH STATION. REFER TO CIVIL FOR SPECIFICATION AND DETAILING OF ALL WATER PIPING IN CHEMICAL ROOM AND FILTER PRESS ROOM NOT EXPLICITLY NOTED AS IN PLUMBING SCOPE.
3. ROUTE DOMESTIC WATER PIPING FROM RPZA HIGH AT PERIMETER AROUND CHEMICAL ROOM. COORDINATE LOCATION WITH CHEMICAL ROOM WATER SUPPLY PIPING. ALL PIPING WITHIN CHEMICAL ROOM AND BELT PRESS ROOM SHALL BE STAINLESS STEEL.
4. SLEEVE WATER PIPING ACROSS ELECTRICAL ROOM. SLEEVE SHALL BE HIGH AND TIGHT TO STRUCTURE AND LABELED ON EXTERIOR. FIRE CAULK BETWEEN SLEEVE AND PIPING AT BELT PRESS WALL TO MATCH WALL FIRE RATING.

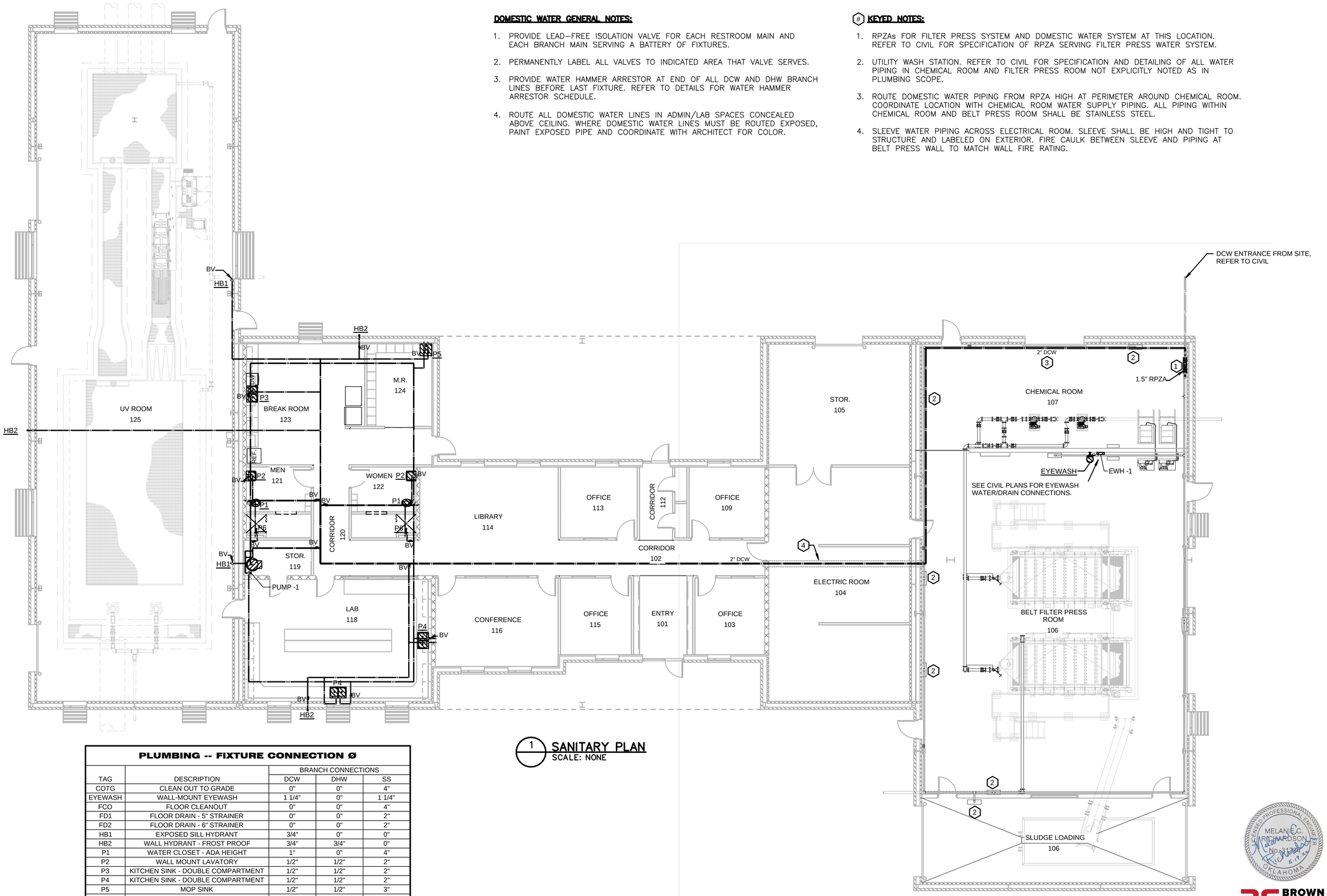

1 SANITARY PLAN
SCALE: NONE

PLUMBING -- FIXTURE CONNECTION Ø

TAG	DESCRIPTION	BRANCH CONNECTIONS DCW	DHW	SS
COTG	CLEAN OUT TO GRADE	0"	0"	4"
EYEWASH	WALL-MOUNT EYEWASH	1 1/4"	0"	1 1/4"
FCO	FLOOR CLEANOUT	0"	0"	4"
FD1	FLOOR DRAIN - 5" STRAINER	0"	0"	2"
FD2	FLOOR DRAIN - 6" STRAINER	0"	0"	2"
HB1	EXPOSED SILL HYDRANT	3/4"	0"	0"
HB2	WALL HYDRANT - FROST PROOF	3/4"	3/4"	0"
P1	WATER CLOSET - ADA HEIGHT	1"	0"	4"
P2	WALL MOUNT LAVATORY	1/2"	1/2"	2"
P3	KITCHEN SINK - DOUBLE COMPARTMENT	1/2"	1/2"	2"
P4	KITCHEN SINK - DOUBLE COMPARTMENT	1/2"	1/2"	2"
P5	MOP SINK	1/2"	1/2"	3"
P6	SHOWER - BUILT UP	1/2"	1/2"	2"

WALL ENGINEERING
PO BOX 1457, DURANT, OK 74702
OKLAHOMA CA #5413 EXP. JUNE 30, 2023

SUBMITTAL / REVISIONS:

DATE	BY	SUBMITTAL / REVISION

SHAWNEE MUNICIPAL AUTHORITY
WASTEWATER SYSTEM IMPROVEMENTS
SHAWNEE, OKLAHOMA

PLUMBING
SANITARY PLAN

PROJECT NO. SHN–20–01
DATE 06/22
DRAWN BY: CD
CHECKED BY: BB
REVIEWED BY: BB
SCALE: AS SHOWN

BAR IS ONE INCH ON ORIGINAL DRAWING
0' 1'
IF NOT ONE INCH ON THIS SHEET, ADJUST SCALES ACCORDINGLY

SHEET
PL3

BROWN ENGINEERS 501-448-0100

P:\PRODUCTION\PROJECTS\WALL ENGINEERING (WE)\WE–055 SHAWNEE NORTHSIDE WASTEWATER TREATMENT PLANT\DWG\PL3.DWG
6/3/2022 1:11 PM

PLUMBING -- FIXTURE CONNECTION Ø				
		BRANCH CONNECTIONS		
TAG	DESCRIPTION	DCW	DHW	SS
COTG	CLEAN OUT TO GRADE	0"	0"	4"
EYEWASH	WALL-MOUNT EYEWASH	1 1/4"	0"	1 1/4"
FCO	FLOOR CLEANOUT	0"	0"	4"
FD1	FLOOR DRAIN - 5" STRAINER	0"	0"	2"
FD2	FLOOR DRAIN - 6" STRAINER	0"	0"	2"
HB1	EXPOSED SILL HYDRANT	3/4"	0"	0"
HB2	WALL HYDRANT - FROST PROOF	3/4"	3/4"	0"
P1	WATER CLOSET - ADA HEIGHT	1"	0"	4"
P2	WALL MOUNT LAVATORY	1/2"	1/2"	2"
P3	KITCHEN SINK - DOUBLE COMPARTMENT	1/2"	1/2"	2"
P4	KITCHEN SINK - DOUBLE COMPARTMENT	1/2"	1/2"	2"
P5	MOP SINK	1/2"	1/2"	3"
P6	SHOWER - BUILT UP	1/2"	1/2"	2"

SANITARY WASTE AND VENT RISER GENERAL NOTES:

1. SANITARY RISERS ARE DIAGRAMMATIC. RISERS INDICATE GENERAL PIPE ROUTES AND SIZES FOR SYSTEM. CONTRACTOR SHALL PROVIDE ALL NECESSARY OFFSETS TO PROVIDE A FULLY FUNCTIONING SYSTEM.
2. SOME P-TRAPS FOR FIXTURES ARE NOT SHOWN FOR CLARITY OF RISER. ALL PLUMBING FIXTURES WITH SANITARY CONNECTIONS SHALL BE PROVIDED WITH EITHER INTEGRAL OR ANCILLARY P-TRAPS.
3. CONTRACTOR SHALL INSTALL ALL PLUMBING FIXTURES IN ACCORDANCE WITH ALL APPLICABLE CODES AND AUTHORITIES HAVING JURISDICTION.
4. CLOSELY COORDINATE ALL VTR ROOF PENETRATIONS WITH ABOVE CEILING DUCTWORK AND STRUCTURE. COORDINATE WITH ARCHITECT FOR FINAL LOCATION.

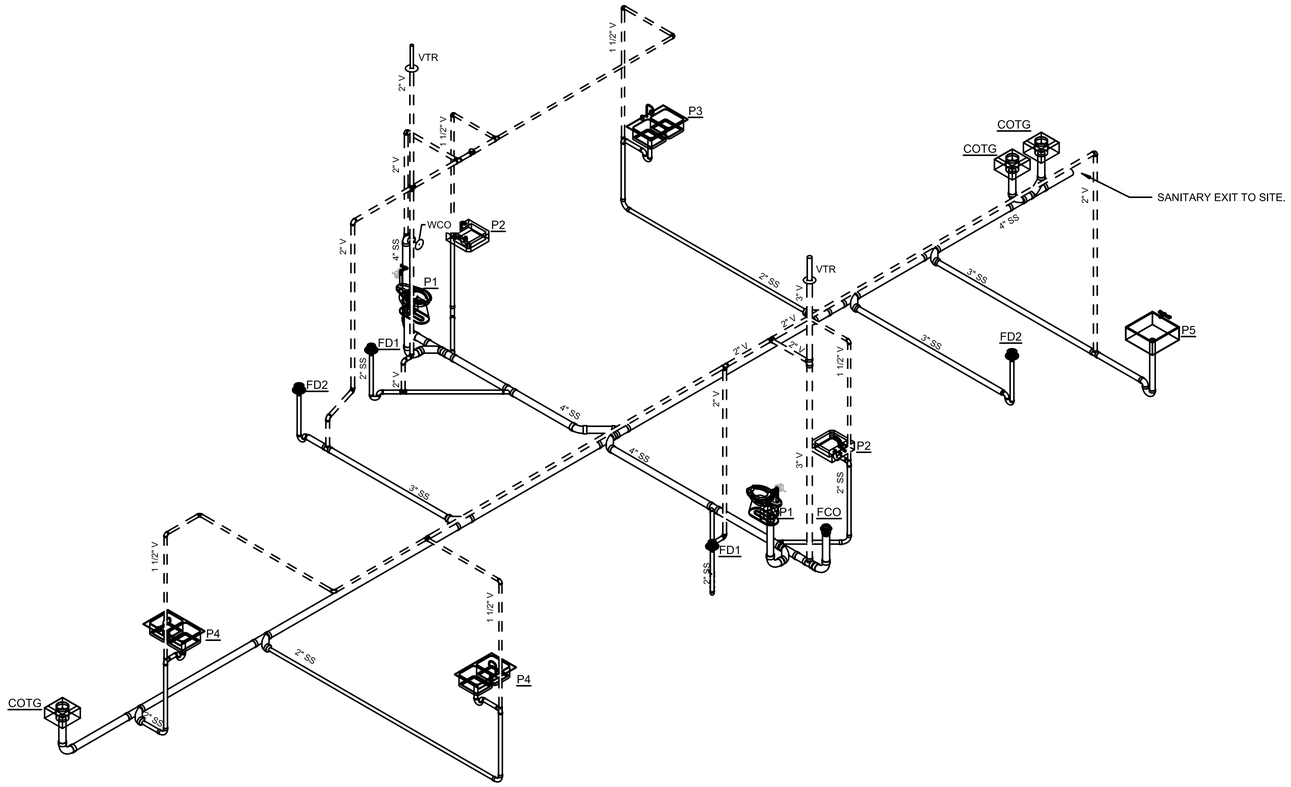

1 SANITARY WASTE AND VENT RISER
SCALE: NONE

WALL ENGINEERING
PO BOX 1457, DURANT, OK 74702
OKLAHOMA CA #5413 EXP. JUNE 30, 2023

SUBMITTAL / REVISIONS:

DATE	BY	SUBMITTAL / REVISION
.	.	.

SHAWNEE MUNICIPAL AUTHORITY
WASTEWATER SYSTEM IMPROVEMENTS
SHAWNEE, OKLAHOMA

PLUMBING
SANITARY WASTE AND VENT RISER

PROJECT NO.	SHN-20-01
DATE	06/22
DRAWN BY:	CD
CHECKED BY:	BB
REVIEWED BY:	BB
SCALE:	AS SHOWN

BAR IS ONE INCH ON ORIGINAL DRAWING
0' 1'
IF NOT ONE INCH ON THIS SHEET, ADJUST SCALES ACCORDINGLY



BROWN ENGINEERS
501-448-0100

SHEET

PL4

P:\PRODUCTION\PROJECTS\WALL ENGINEERING (WE)\WE-055 SHAWNEE NORTHSIDE WASTEWATER TREATMENT PLANT\DWG\PL4.DWG
6/3/2022 10:22 AM

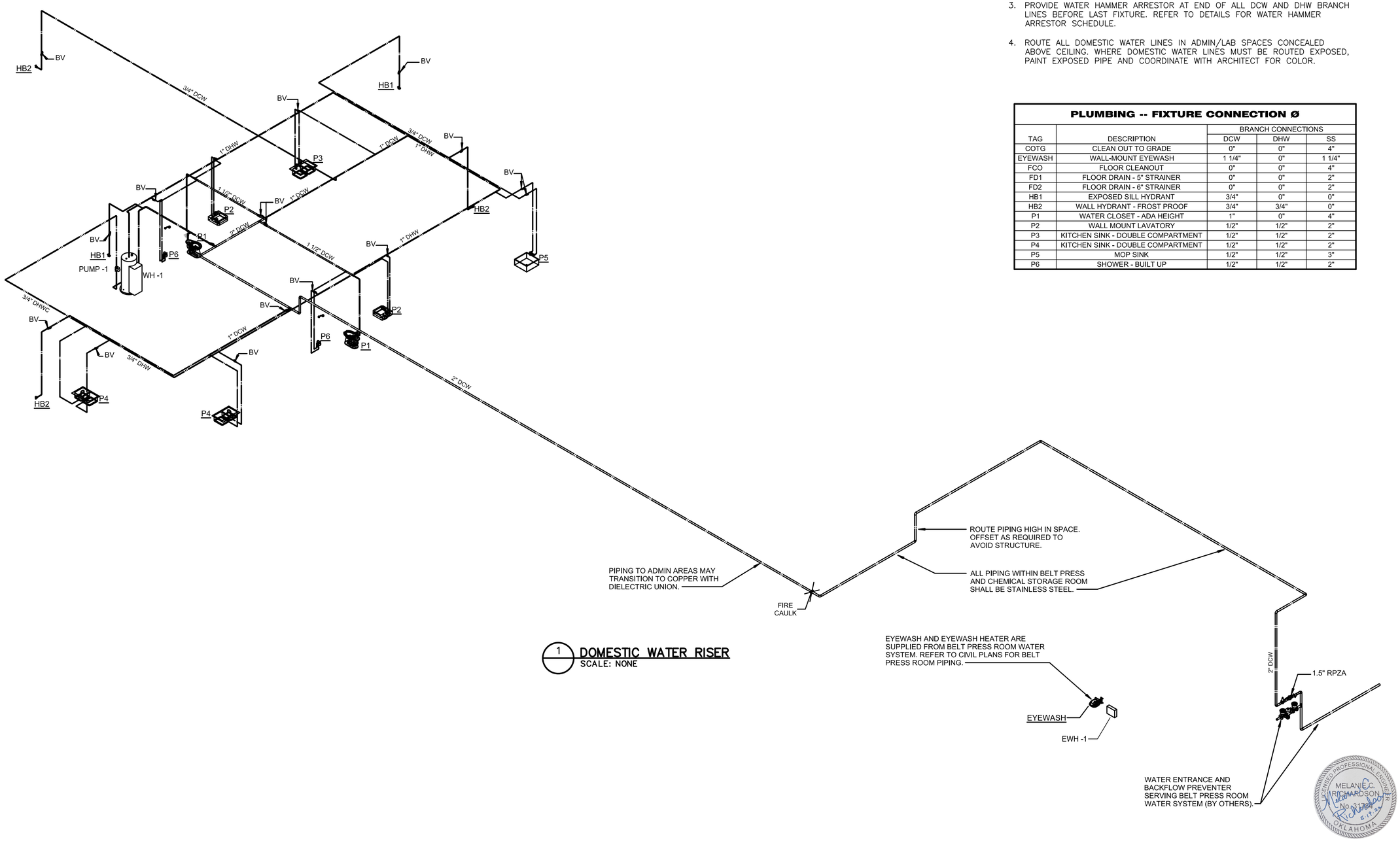

1 DOMESTIC WATER RISER
SCALE: NONE

DOMESTIC WATER GENERAL NOTES:

1. PROVIDE LEAD–FREE ISOLATION VALVE FOR EACH RESTROOM MAIN AND EACH BRANCH MAIN SERVING A BATTERY OF FIXTURES.
2. PERMANENTLY LABEL ALL VALVES TO INDICATED AREA THAT VALVE SERVES.
3. PROVIDE WATER HAMMER ARRESTOR AT END OF ALL DCW AND DHW BRANCH LINES BEFORE LAST FIXTURE. REFER TO DETAILS FOR WATER HAMMER ARRESTOR SCHEDULE.
4. ROUTE ALL DOMESTIC WATER LINES IN ADMIN/LAB SPACES CONCEALED ABOVE CEILING. WHERE DOMESTIC WATER LINES MUST BE ROUTED EXPOSED, PAINT EXPOSED PIPE AND COORDINATE WITH ARCHITECT FOR COLOR.

PLUMBING -- FIXTURE CONNECTION Ø

TAG	DESCRIPTION	BRANCH CONNECTIONS		
		DCW	DHW	SS
COTG	CLEAN OUT TO GRADE	0"	0"	4"
EYEWASH	WALL-MOUNT EYEWASH	1 1/4"	0"	1 1/4"
FCO	FLOOR CLEANOUT	0"	0"	4"
FD1	FLOOR DRAIN - 5" STRAINER	0"	0"	2"
FD2	FLOOR DRAIN - 6" STRAINER	0"	0"	2"
HB1	EXPOSED SILL HYDRANT	3/4"	0"	0"
HB2	WALL HYDRANT - FROST PROOF	3/4"	3/4"	0"
P1	WATER CLOSET - ADA HEIGHT	1"	0"	4"
P2	WALL MOUNT LAVATORY	1/2"	1/2"	2"
P3	KITCHEN SINK - DOUBLE COMPARTMENT	1/2"	1/2"	2"
P4	KITCHEN SINK - DOUBLE COMPARTMENT	1/2"	1/2"	2"
P5	MOP SINK	1/2"	1/2"	3"
P6	SHOWER - BUILT UP	1/2"	1/2"	2"

WALL ENGINEERING
PO BOX 1457, DURANT, OK 74702
OKLAHOMA CA #5413 EXP. JUNE 30, 2023

SUBMITTAL / REVISIONS:

DATE	BY	SUBMITTAL / REVISION

SHAWNEE MUNICIPAL AUTHORITY
WASTEWATER SYSTEM IMPROVEMENTS
SHAWNEE, OKLAHOMA

PLUMBING
DOMESTIC WATER RISER

PROJECT NO. SHN–20–01
DATE 06/22
DRAWN BY: CD
CHECKED BY: BB
REVIEWED BY: BB
SCALE: AS SHOWN

BAR IS ONE INCH ON ORIGINAL DRAWING
0' 1'
IF NOT ONE INCH ON THIS SHEET, ADJUST SCALES ACCORDINGLY

SHEET
PL5

BROWN ENGINEERS
501-448-0100

LICENSED PROFESSIONAL ENGINEER
MELANIE C. RICHARDSON
No. 31734
OKLAHOMA

P:\PRODUCTION\PROJECTS\WALL ENGINEERING (WE)\WE–055 SHAWNEE NORTHSIDE WASTEWATER TREATMENT PLANT\DWG\PL5.DWG
5/20/2022 2:40 PM

GENERAL NOTE WHERE POSSIBLE, OFFSET COTG FITTINGS AWAY FROM BUILDING PERIMETER TO AVOID SIDEWALKS. ALL DCOTG LOCATIONS SHALL BE ACCESSIBLE FOR USE.

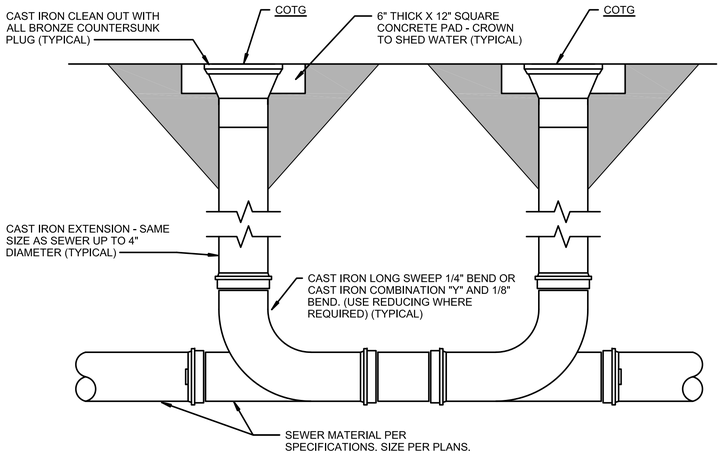

1 DOUBLE CLEANOUT TO GRADE
SCALE: NONE

COMBINED DOUBLE CLEANOUT FITTING OPTION.

MATCH DCOTG STYLE SHOWN ON PLANS

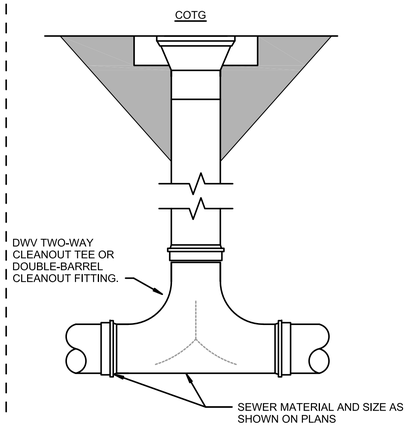

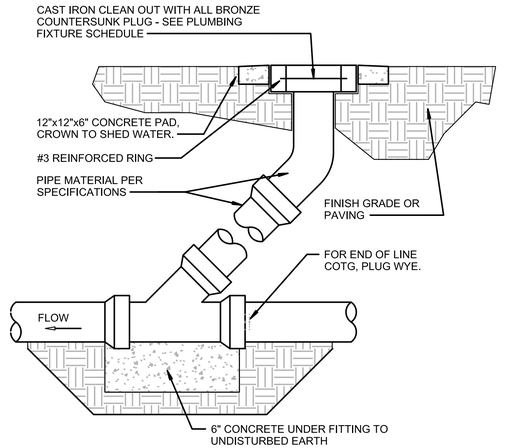

2 CLEANOUT TO GRADE
SCALE: NONE

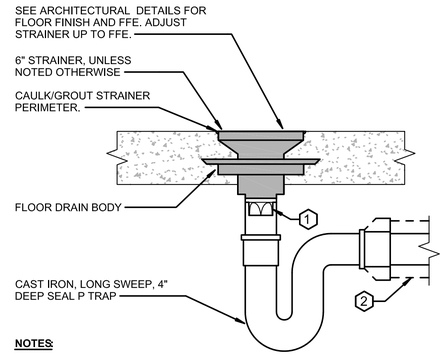

NOTES

1. PROVIDE TRAP SEAL PROTECTION DEVICE.
2. FOR COMBINATION WASTE AND VENT, UPSIZE PIPE BY TWO NOMINAL SIZES.

3 FLOOR DRAIN
SCALE: NONE

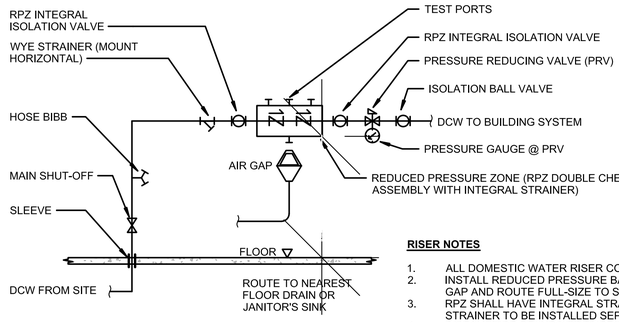

RPZ SIZE	MAKE	MODEL
1/4" - 2"	WATTS	ULF009QTS
2 1/2" - 3"	WATTS	LF009QT-FDA
4" - 10"	WATTS	LF909OSYS-FDA

RISER NOTES

1. ALL DOMESTIC WATER RISER COMPONENTS SHALL BE LEAD-FREE.
2. INSTALL REDUCED PRESSURE BACKFLOW PREVENTER WITH MANUFACTURER'S AIR GAP AND ROUTE FULL-SIZE TO SANITARY.
3. RPZ SHALL HAVE INTEGRAL STRAINER UNLESS SPATIAL CONSTRAINTS REQUIRE STRAINER TO BE INSTALLED SEPARATELY.
4. INSTALL PIPE STANDS TO SUPPORT THE COMPONENTS. DO NOT SUPPORT ASSEMBLIES FROM PIPING. INSTALL BEARING PLATES ON CONCRETE FLOOR UNDEF EACH SUPPORT.
5. COORDINATE FINAL LOCATION OF DOMESTIC RISER WITH ALL OTHER SYSTEMS AND EQUIPMENT IN ASSOCIATED ROOM. RISER SHALL NOT INTERFERE WITH OR IMPEDE OPERATIONS OF OTHER SYSTEMS OR FACILITY PERSONNEL.
6. INSTALL ALL VALVES SO THAT VALVE HANDLES ARE NOT IMPEDED IN ANY MANNER AND ARE EASILY OPERATED FROM INTERIOR OF ROOM.

PRV NOTES

1. IF INCOMING PRESSURE IS 70PSI OR GREATER, PROVIDE PRV EQUAL TO WATTS LF223 FOR 2 1/2" AND BELOW. PRV SHALL BE EQUAL TO WATTS LFN223B FOR 3".
2. SIZE PRV PER PLANS OR MATCH RPZ SIZE, DO NOT SIZE BASED ON DISTRIBUTION PIPE SIZE.
3. ENGINEER SHALL BE INFORMED IF INCOMING PRESSURE AT BUILDING IS 150PSI OR GREATER.

4 RPZ DOMESTIC WATER RISER
SCALE: NONE

KEYED NOTES

1. TAP HOT WATER SUPPLY AT SINK FOR DISHWASHER. PROVIDE BRASS INLINE ISOLATION VALVE FOR DISHWASHER SUPPLY LINE.
2. ROUTE DISHWASHER DRAIN THROUGH HIGH LOOP SECURED TO BOTTOM OF COUNTERTOP WITH NON-METALLIC FASTENER OR CONNECT TO SINK-TOP AIR GAP FITTING BEFORE CONNECTING TO SINK DRAIN.
3. CONNECT DISHWASHER DRAIN TO GARBAGE DISPOSAL INLET PORT. FOR SINKS WITHOUT GARBAGE DISPOSAL, CONNECT DRAIN TO WYE FITTING IN VERTICAL PIPE UPSTREAM OF P-TRAP. TRIM DISHWASHER DRAIN HOSE TO ELIMINATE EXCESS LENGTH. DRAIN SHALL BE SLOPED TO DRAIN DOWNSTREAM OF HIGH LOOP OR AIR GAP.

5 RESIDENTIAL STYLE DISHWASHER PLUMBING
SCALE: NONE

HAMMER ARRESTOR SCHEDULE		
SUPPLY BRANCH SIZE	PDI HAMMER ARRESTOR SIZE	FIXTURE UNITS
1/2" - 1"	A	1-11
1-1/4"	B	12-32
1-1/2"	C	33-60
2"	D	61-113
2-1/2"	E	114-154
3"	F	155-330

COMMON PUBLIC FIXTURE GROUPS		
PLUMBING GROUP FIXTURES	C.W.F.U.	
	FLUSH TANK	FLUSH VALVE
1 TLT, 1 LAV	6.5	11.5
2 TLT, 2 LAV	13.5	23
1 TLT, 1 UR, 1 LAV	13	18
3 TLT, 3 LAV	19.5	34.5
2 TLT, 1 UR, 3 LAV	19.5	29.5
4 TLT, 4 LAV	26	46

NOTES

1. ALL BATHROOM GROUPS SHALL INCLUDE A MINIMUM OF ONE DCW ARRESTOR AND ONE DHW ARRESTOR SIZED PER HAMMER ARRESTOR SCHEDULE. ADDITIONAL ARRESTORS SHALL BE INSTALLED WHERE INDICATED.
2. ARRESTORS SHALL BE P.D.I.-WH201 APPROVED AND CERTIFIED.
3. ARRESTORS SHALL HAVE WROUGHT COPPER SHELL WITH THREADED CONNECTIONS ANI HYDRO-PNEUMATIC AIR CUSHION.
4. PROVIDE ACCESS TO ARRESTORS.
5. FURNISH AND INSTALL WITH ISOLATION VALVES INDEPENDENT OF ASSEMBLY.

6 WATER HAMMER ARRESTOR SCHEDULE
SCALE: NONE

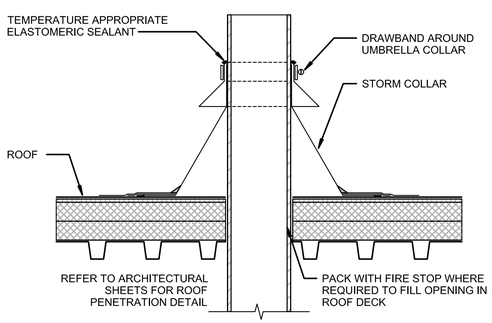

NOTES

1. VENT ABOVE ROOF SHALL BE PAINTED TO MATCH ROOF. COORDINATE WITH ARCHITECT.
2. IF ARCHITECTURAL PIPE PENETRATION DETAIL IS AVAILABLE, IT SHALL SUPERCEDE THIS DETAIL.

6 VENT THROUGH ROOF
SCALE: NONE

WALL ENGINEERING
PO BOX 1457, DURANT, OK 74702
OKLAHOMA CA #5413 EXP. JUNE 30, 2023

SUBMITTAL / REVISIONS:

DATE	BY	SUBMITTAL / REVISION
. . . . .	. . . . .	. . . . .

SHAWNEE MUNICIPAL AUTHORITY
WASTEWATER SYSTEM IMPROVEMENTS
SHAWNEE, OKLAHOMA

PLUMBING DETAILS

PROJECT NO.
SHN–20–01

DATE
06/22

DRAWN BY:
CD

CHECKED BY:
BB

REVIEWED BY:
BB

SCALE:
AS SHOWN

BAR IS ONE INCH ON ORIGINAL DRAWING
0" 1"
IF NOT ONE INCH ON THIS SHEET, ADJUST SCALES ACCORDINGLY

SHEET
PL6

MELANIE C. RICHARDSON
No. 21821
REGISTERED PROFESSIONAL ENGINEER
OKLAHOMA
BROWN ENGINEERS
501-448-0100

P:\PRODUCTION\PROJECTS\WALL ENGINEERING (WE)\WE-055 SHAWNEE NORTHSIDE WASTEWATER TREATMENT PLANT\DWG\PL6.DWG
5/20/2022 2:41 PM

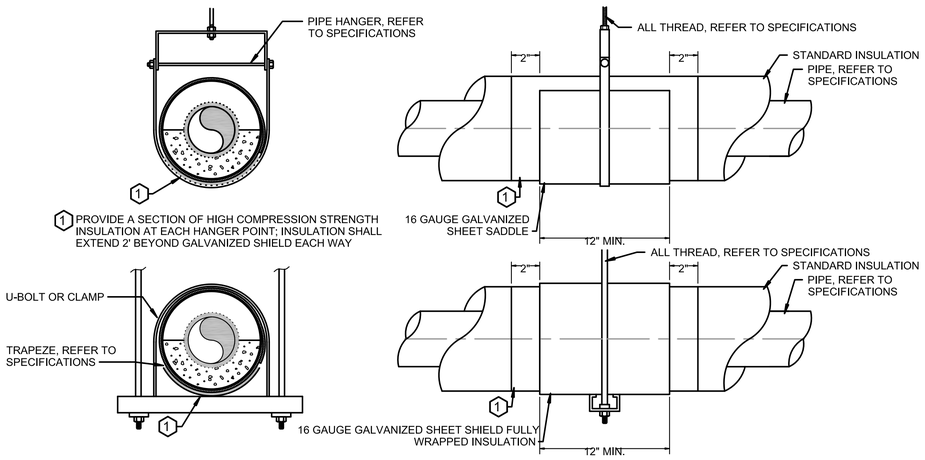

1 **INSULATED PIPE HANGER**
SCALE: NONE

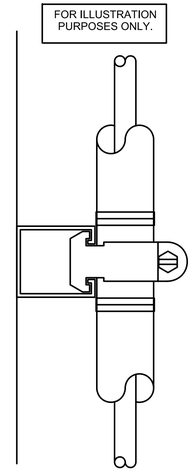

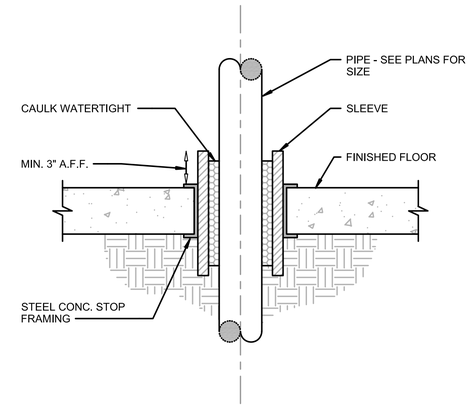

2 **FLOOR ON GRADE PENETRATION**
SCALE: NONE

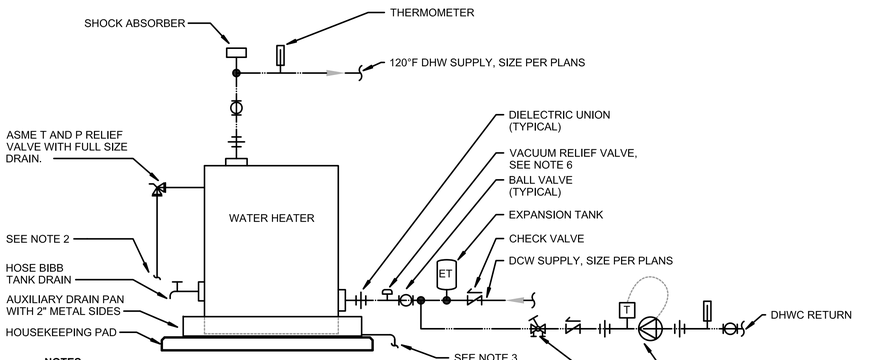

NOTES:

1. PROVIDE THERMAL EXPANSION TANK ON COLD WATER INLET. SIZE PER MANUFACTURER'S RECOMMENDATION.
2. T & P RELIEF VALVE SHALL DISCHARGE FULL SIZE TO SANITARY. T&P DISCHARGE SHALL NOT CAUSE A THREAT TO OR INTERFERE WITH FACILITY OPERATIONS, FACILITY ITSELF, EQUIPMENT OR PERSONNEL. THE DISCHARGE PIPE SHALL NOT HAVE ANY TRAPPED SECTIONS.
3. PAN DRAIN SHALL EXTEND FULL SIZE TO SANITARY.
4. T & P RELIEF VALVE AND DRAIN PAN DISCHARGE SHALL CONFORM TO ALL LOCAL CODES AND AUTHORITIES HAVING JURISDICTION.
5. FOR SUSPENDED WATER HEATERS, PROVIDE PRE-MANUFACTURED PLATFORM EQUAL TO 'HOLD-RITE'. PLATFORM SHALL BE RATED FOR FULL WEIGHT OF WATER HEATER AND ACCESSORIES WHEN FILLED. PROVIDE SECONDARY SEISMIC STRAP AROUND WATER HEATER AND SECURED TO STRUCTURE.
6. PROVIDE BOTTOM FED WATER HEATERS WITH VACUUM RELIEF VALVE WHICH MEETS ANSI Z21.22.
7. SET PUMP TIMER SO THAT RECIRCULATION PUMP OPERATES ONLY DURING OCCUPIED HOURS.

3 **WATER HEATER – SINGLE TEMP. W/RECIRC**
SCALE: NONE

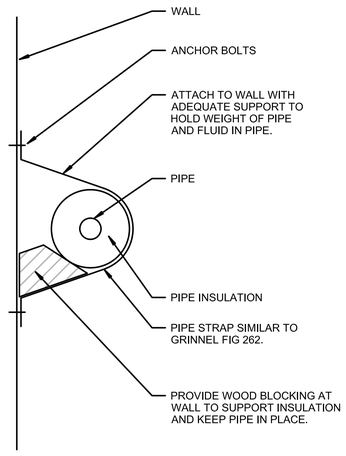

USE WHEN SPACE AGAINST WALL IS TOO LIMITED FOR UNI-STRUT TYPE WALL HANGERS.

4 **PIPING SUPPORT**
SCALE: NONE

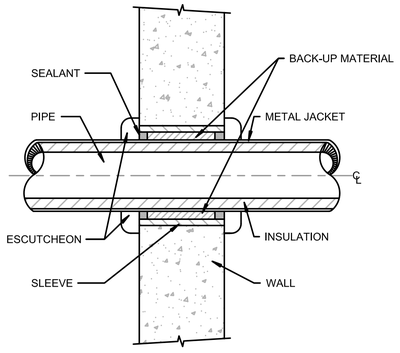

5 **PIPE SLEEVE THROUGH WALL**
SCALE: NONE

WALL ENGINEERING
PO BOX 1457, DURANT, OK 74702
OKLAHOMA CA #5413 EXP. JUNE 30, 2023

SUBMITTAL / REVISIONS:

DATE	BY	SUBMITTAL / REVISION
. . . . .	. . .	. . . . .

SHAWNEE MUNICIPAL AUTHORITY
WASTEWATER SYSTEM IMPROVEMENTS
SHAWNEE, OKLAHOMA

PLUMBING DETAILS

PROJECT NO.
SHN–20–01
DATE
06/22
DRAWN BY:
CD
CHECKED BY:
BB
REVIEWED BY:
BB
SCALE:
AS SHOWN

BAR IS ONE INCH ON ORIGINAL DRAWING
0" 1"
IF NOT ONE INCH ON THIS SHEET, ADJUST SCALES ACCORDINGLY

SHEET
PL7



BROWN ENGINEERS
501-448-0100

P:\PRODUCTION\PROJECTS\WALL ENGINEERING (WE)\WE-055 SHAWNEE NORTHSIDE WASTEWATER TREATMENT PLANT\DWG\PL7.DWG
6/3/2022 9:01 AM

ABBREVIATIONS:

ABV..... ABOVE
AFF..... ABOVE FINISH FLOOR
AC..... ACOUSTICAL
ACT..... ACOUSTICAL CEILING TILE
ASASS..... ADA SHOWER SEAT
ADD..... ADDENDUM
ADDL..... ADDITIONAL
ADH..... ADHESIVE
ADJ..... ADJUSTABLE
ADMIN..... ADMINISTRATION
A/C..... AIR CONDITIONING
AHU..... AIR HANDLING UNIT
AL..... ALUMINUM
ALUM..... ALUMINUM
ALT..... ALTERNATE
ANCH..... ANCHOR
AB..... ANCHOR BOLT
ANG..... ANGLE
ANOD..... ANODIZED
APPROX... APPROXIMATE
ARCH..... ARCHITECT, ARCHITECTURAL
A/E..... ARCHITECT-ENGINEER
AD..... AREA DRAIN
ASB..... ASBESTOS
ASP..... ASPHALT
ASSY..... ASSEMBLY
AUTO..... AUTOMATIC

BCS..... BABY CHANGING STATION
BD..... BOARD
BDRM..... BEDROOM
BEL..... BELOW
BK..... BRICK
BKT..... BRACKET
BL..... BUILDING LINE
BLDG..... BUILDING
BLK..... BLOCK, BLOCKING
BM..... BEAM
BNCHMK... BENCH MARK
BO..... BY OWNER
BOD..... BOTTOM OF DECK
BOM..... BOTTOM OF MULLION
BOT..... BOTTOM
BP..... BRICK PAVER
BR..... BACKER ROD
BS..... BATH STATION PULL CORD
BSMT..... BASEMENT
BT..... BENT
BVL..... BEVELED

CAB..... CABINET
CO2..... CARBON DIOXIDE
CPT..... CARPET
CO..... CASED OPENING
CSG..... CASING
CI..... CAST IRON
CLG..... CEILING
CHPTP..... CLG HUNG PLASTIC TLT PARTITION
CSS..... CEILING SUPPORT SYSTEM
CEM..... CEMENT
CTR..... CENTER
CL..... CENTER LINE
C/C..... CENTER TO CENTER
CER..... CERAMIC
CT..... CERAMIC TILE
CR ..... CHAIR RAIL
CHKBD..... CHALK BOARD
BLK..... BLOCK, BLOCKING
BM..... BEAM
BNCHMK... BENCH MARK
BO..... BY OWNER
BOD..... BOTTOM OF DECK
BOM..... BOTTOM OF MULLION
BOT..... BOTTOM
BP..... BRICK PAVER
BR..... BACKER ROD
BS..... BATH STATION PULL CORD
BSMT..... BASEMENT
BT..... BENT

CAB..... CABINET
CO2..... CARBON DIOXIDE
CPT..... CARPET
CO..... CASED OPENING
CSG..... CASING
CI..... CAST IRON
CLG..... CEILING
CHPTP..... CLG HUNG PLASTIC TLT PARTITION
CSS..... CEILING SUPPORT SYSTEM
CEM..... CEMENT
CTR..... CENTER
CL..... CENTER LINE
C/C..... CENTER TO CENTER
CER..... CERAMIC
CT..... CERAMIC TILE
CR ..... CHAIR RAIL
CHKBD..... CHALK BOARD
BLK..... BLOCK, BLOCKING
BM..... BEAM
BNCHMK... BENCH MARK
BO..... BY OWNER
BOD..... BOTTOM OF DECK
BOM..... BOTTOM OF MULLION
BOT..... BOTTOM
BP..... BRICK PAVER
BR..... BACKER ROD
BS..... BATH STATION PULL CORD
BSMT..... BASEMENT
BT..... BENT

CAB..... CABINET
CO2..... CARBON DIOXIDE
CPT..... CARPET
CO..... CASED OPENING
CSG..... CASING
CI..... CAST IRON
CLG..... CEILING
CHPTP..... CLG HUNG PLASTIC TLT PARTITION
CSS..... CEILING SUPPORT SYSTEM
CEM..... CEMENT
CTR..... CENTER
CL..... CENTER LINE
C/C..... CENTER TO CENTER
CER..... CERAMIC
CT..... CERAMIC TILE
CR ..... CHAIR RAIL
CHKBD..... CHALK BOARD
BLK..... BLOCK, BLOCKING
BM..... BEAM
BNCHMK... BENCH MARK
BO..... BY OWNER
BOD..... BOTTOM OF DECK
BOM..... BOTTOM OF MULLION
BOT..... BOTTOM
BP..... BRICK PAVER
BR..... BACKER ROD
BS..... BATH STATION PULL CORD
BSMT..... BASEMENT
BT..... BENT

CAB..... CABINET
CO2..... CARBON DIOXIDE
CPT..... CARPET
CO..... CASED OPENING
CSG..... CASING
CI..... CAST IRON
CLG..... CEILING
CHPTP..... CLG HUNG PLASTIC TLT PARTITION
CSS..... CEILING SUPPORT SYSTEM
CEM..... CEMENT
CTR..... CENTER
CL..... CENTER LINE
C/C..... CENTER TO CENTER
CER..... CERAMIC
CT..... CERAMIC TILE
CR ..... CHAIR RAIL
CHKBD..... CHALK BOARD
BLK..... BLOCK, BLOCKING
BM..... BEAM
BNCHMK... BENCH MARK
BO..... BY OWNER
BOD..... BOTTOM OF DECK
BOM..... BOTTOM OF MULLION
BOT..... BOTTOM
BP..... BRICK PAVER
BR..... BACKER ROD
BS..... BATH STATION PULL CORD
BSMT..... BASEMENT
BT..... BENT

CAB..... CABINET
CO2..... CARBON DIOXIDE
CPT..... CARPET
CO..... CASED OPENING
CSG..... CASING
CI..... CAST IRON
CLG..... CEILING
CHPTP..... CLG HUNG PLASTIC TLT PARTITION
CSS..... CEILING SUPPORT SYSTEM
CEM..... CEMENT
CTR..... CENTER
CL..... CENTER LINE
C/C..... CENTER TO CENTER
CER..... CERAMIC
CT..... CERAMIC TILE
CR ..... CHAIR RAIL
CHKBD..... CHALK BOARD
BLK..... BLOCK, BLOCKING
BM..... BEAM
BNCHMK... BENCH MARK
BO..... BY OWNER
BOD..... BOTTOM OF DECK
BOM..... BOTTOM OF MULLION
BOT..... BOTTOM
BP..... BRICK PAVER
BR..... BACKER ROD
BS..... BATH STATION PULL CORD
BSMT..... BASEMENT
BT..... BENT

SYMBOLS

1.1 — KEY NOTE

MATERIAL OR COLOR CHANGE

? — WINDOW NUMBER

? — PARTITION TYPE

S100 — SIGNAGE NUMBER (STARTING WITH "S")

? ? A.F.F. — CEILING TYPE AND HEIGHT

? ? — ROOM NAME AND NUMBER

? — REVISION INDICATION AND KEY

LEVEL AND ELEVATION INDICATION

DRAWING KEY, INDICATION AND SCALE

N — PLAN NORTH ARROW

? ? — SECTION KEY

? — EXTERIOR ELEVATION

? ? ? ? ? — INTERIOR ELEVATION

? ? ? ? — DETAIL SECTION KEY

DETAIL PLAN KEY

XXX — NEW DOOR AND NUMBER

XXX — EXISTING DOOR AND NUMBER

(CMU) CONCRETE MASONARY UNIT

GYPSUM BOARD PARTITION.

EXISTING PARTITION

DEMOLISHED PARTITION.

GRID LINE

CENTER LINE

SMOKE BARRIER

1 HOUR

2 HOUR

MATERIALS

CONCRETE

CONCRETE MASONRY UNIT

BRICK

GYPSUM, PLASTER, MORTAR

EARTH

AGGREGATE BASE

STEEL

ALUMINUM

RIGID INSULATION

INSULATION BATT

BLOCKING

BLOCKING - SHIM

PLYWOOD

WOOD

Project Number PRINT DATE: 6/22/2022 5:10:32 PM

BKL ENGINEERS | ARCHITECTS
C.A. 0049 (ARCH) RENEWAL
DATE: 06-30-23
C.A. 262 (PE) RENEWAL
DATE: 06-30-22

Shawnee Northside WWTP

Enter address here

PROJECT NO.: Project Number
SUBMITTAL:
ISSUE DATE: Issue Date

PROJ. MANAGER: Checker
DESIGNED BY: GENERAL
DRAWN BY: DRW

REVISIONS:

No.	Description	Date

PRELIMINARY

THIS DOCUMENT IS PRELIMINARY IN NATURE AND IS NOT A FINAL, SIGNED AND SEALED DOCUMENT

SHEET OF

ABBREVIATIONS AND SYMBOLS

XG1-02

GENERAL

G1. SCOPE
THE NOTES ON THIS SHEET AND THE STANDARD STRUCTURAL DETAILS ARE GENERAL AND APPLY TO THE ENTIRE PROJECT WHETHER SPECIFICALLY CALLED OUT OR NOT, EXCEPT WHERE THERE ARE SPECIFIC INDICATIONS TO THE CONTRARY ON STRUCTURAL SHEETS. IF THERE ARE QUESTIONS, THEY SHALL BE SUBMITTED TO THE STRUCTURAL ENGINEER AND ANSWERED IN WRITING PRIOR TO CONSTRUCTION.

G2. APPLICABLE SPECIFICATIONS AND CODES
A. INTERNATIONAL BUILDING CODE (IBC) 2012 WITH APPLICABLE EDITIONS OF THE CODE REFERENCED STANDARDS.
B. ACI 350-{01},{06}
C. ASCE 7-16
D. AISC 14th EDITION
E. LOCAL JURISDICTION AMENDMENTS

G3. DESIGN CRITERIA
1. APPLIES TO ALL STRUCTURES
A. DEAD LOAD:
1. ACTUAL TRIBUTARY STRUCTURE WEIGHT
2. SUPERIMPOSED DEAD LOAD:
B. LIVE LOAD:

1. ELEVATED FLOORS:	40 PSF
2. WALKWAYS, STAIRS, GRATING:	100 PSF
3. SLAB ON GRADE:	250 PSF
4. ROOF:	20 PSF (NOT REDUCIBLE)

C. WIND:
1. BASIC WIND SPEED: 120 MPH
2. EXPOSURE: C
3. RISK CATEGORY: III
4. ALL STRUCTURES ARE ENCLOSED EXCEPT AS FOLLOWS: OVERHEAD CRANE
D. SNOW LOAD:
1. GROUND SNOW LOAD = 10 PSF

G4. GEOTECH
THE FOLLOWING NON-CONTRACTUAL GEOTECHNICAL REPORT DEVELOPED FOR THIS PROJECT AND IS THE BASIS OF THIS STRUCTURAL DESIGN:
CONTRACTOR IS TO READ AND BECOME FAMILIAR WITH THE GEOTECHNICAL REPORT.
GEOTECHNICAL FIRM NAME: HINDERLIGHTER GEOTECHNICAL ENGINEERING
ADDRESS: 4071 NW 3rd St., OKLAHOMA CITY, OK
PROJECT NUMBER: WE-20-03
REPORT DATE: JUNE 2020
ALLOWABLE [NET] SOIL BEARING = 2000 / 5000 PSF
PRIOR TO REACHING THE EXCAVATIONS DEPTHS OF 15 FEET TO 50 FEET, EXCAVATIONS ARE EXPECTED TO ENCOUNTER HARD SHALEY CLAYS, WEATHERED SHALE AND/OR WEATHERED SANDSTONE. BEDROCK REFLECTING AN SPT "N" VALUE OF 50 BLOWS PER 4 INCHES OR MORE OF PENETRATION CAN BE SUCCESSFULLY REMOVED USING EXCAVATION EQUIPMENT OUTFITTED WITH ROCK-RIPPING TEETH. BEDROCK DISPLAYING N-VALUES OF 50 BLOWS PER 3 INCHES OR LESS OF PENETRATION COULD REQUIRE PNEUMATIC HAMMERS OR BLASTING FOR REMOVAL.

G5. SAFETY
SAFETY AND STRUCTURE STABILITY DURING CONSTRUCTION ARE THE SOLE RESPONSIBILITY OF THE CONTRACTOR. STRUCTURES HAVE BEEN DESIGNED TO RESIST THE DESIGN LIVE LOADS ONLY AS A COMPLETED STRUCTURE.

G6. OPENINGS
OPENINGS FOR PIPES, DUCTS, CONDUITS, ETC. ARE NOT ALL SHOWN ON THE STRUCTURAL DRAWINGS. COORDINATE AND PROVIDE OPENINGS AS REQUIRED TO ACCOMMODATE ALL WORK SHOWN OR SPECIFIED IN THE CONTRACT DOCUMENTS AND OTHERWISE REQUIRED FOR THE FURNISHING OF A FUNCTIONALLY COMPLETE PROJECT. REINFORCE AROUND OPENINGS PER STANDARD STRUCTURAL DETAILS UNLESS OTHERWISE SHOWN.

G7. STANDARD DETAILS
THE STANDARD DETAILS DEPICT TYPICAL DETAILING TO BE USED ON THIS PROJECT. IF CONDITIONS ARE NOT EXPLICITLY SHOWN ON THE DRAWINGS THEY SHALL BE MADE SIMILAR TO THE STANDARD DETAILS. OBTAIN APPROVAL OF ENGINEER IN WRITING FOR SIMILAR CONDITIONS PRIOR TO CONSTRUCTION.

G8. THE CONTRACTOR SHALL FIELD VERIFY ALL DIMENSIONS AND ELEVATIONS OF EXISTING CONSTRUCTION AS REQUIRED TO COORDINATE NEW CONSTRUCTION. SUBMIT REQUIRED CHANGES FOR APPROVAL.

G9. CONTRACTOR TO SUBMIT FOR REVIEW ALL EQUIPMENT SIZES, OPERATING WEIGHTS, VIBRATION FORCES, SUPPORT LOCATIONS, ALONG WITH ANY FLOOR OPENINGS, NOTCHES, AND RECESSES REQUIRED BY SUCH EQUIPMENT. CONCRETE SUPPORT PADS AND/OR FRAMING REQUIRED TO SUPPORT SAID EQUIPMENT SHALL NOT BE FABRICATED AND PLACED UNTIL THE CONCRETE SUPPORT PADS AND/OR FRAMING IS APPROVED TO SUPPORT THE EQUIPMENT.

G10 SPECIAL INSPECTIONS
SPECIAL INSPECTIONS ARE REQUIRED IN ACCORDANCE WITH CHAPTER 1 AND CHAPTER 17 OF THE CONTRACTOR SHALL PROVIDE FOR FULL ACCESS TO THE WORK BY THE SPECIAL INSPECTOR & SHALL PROVIDE FOR THESE INSPECTIONS IN HIS CONSTRUCTION SCHEDULE IN ACCORDANCE WITH THE SPECIFICATIONS. A SPECIAL INSPECTION PLAN WILL BE SUBMITTED UNDER SEPARATE COVER WITH THE PERMIT APPLICATION.

G11 UNLESS SPECIFICALLY NOTED, THERE ARE NOT PROVISIONS MADE FOR FUTURE FLOORS, ROOFS, OR OTHER LOADS.

CONCRETE

C1. DESIGN STRENGTHS: (28 DAY COMPRESSIVE STRENGTH)

NORMAL WEIGHT CONCRETE FILL, UTILITY ENCASEMENT CONCRETE:	3000 PSI
NORMAL WEIGHT CONCRETE TOPPING:	4000 PSI
NORMAL WEIGHT CONCRETE INTEGRAL WEARING COURSE:	6000 PSI
NORMAL WEIGHT CONCRETE W/ POWER TROWEL FINISH:	4000 PSI
NORMAL WEIGHT WATER-BEARING CONCRETE:	4500 PSI

C2. CONCRETE COVER
UNLESS OTHERWISE NOTED, PROVIDE CONCRETE COVER FOR REINFORCING AS FOLLOWS:

CONCRETE DEPOSITED AGAINST EARTH:	3"
ALL OTHER:	2"

SEE DRAWINGS FOR EXCEPTIONS

C3. SEE SPECIFICATIONS FOR REINFORCING PLACEMENT REQUIREMENTS.

C4. REFER TO OTHER DISCIPLINE DRAWINGS PRIOR TO CONSTRUCTION FOR EMBEDDED ITEMS AND PENETRATIONS NOT SHOWN ON STRUCTURAL DRAWINGS. AS REQUIRED TO ACCOMMODATE ALL WORK SHOWN OR SPECIFIED IN THE CONTRACT DOCUMENTS AND OTHERWISE REQUIRED FOR THE FURNISHING OF A FUNCTIONALLY COMPLETE PROJECT. REINFORCE AROUND OPENINGS PER STANDARD STRUCTURAL DETAILS UNLESS OTHERWISE SHOWN.

C5. PROVIDE 3/4" CHAMFERS AT ALL EXPOSED EDGES {AND 1/2" CHAMFERS AT JOINTS AS SHOWN.} NOT ALL CHAMFERS MAY BE SHOWN ON DRAWINGS.

C6. FIELD ADJUST REINFORCING AT OPENINGS AND EMBEDDED ITEMS AS INDICATED.

C7. ANCHOR BOLTS NOT SPECIFIED BY ENGINEER SHALL BE DESIGNED AND CERTIFIED BY A REGISTERED PROFESSIONAL ENGINEER, RETAINED BY THE CONTRACTOR, IN ACCORDANCE WITH APPLICABLE PROJECT AND CODE REQUIREMENTS. SUBMIT AS A SHOP DRAWING FOR REVIEW AND APPROVAL BY THE ENGINEER. COORDINATE LOCATION, SIZE AND EMBEDMENT PRIOR TO CASTING CONCRETE.

C8. CONTINUOUS WATERSTOP SHALL BE INSTALLED IN JOINTS SUBJECT TO STATIC WATER PRESSURE AND IN LOCATIONS SHOWN ON THE DRAWINGS.

C9. ABSOLUTELY NO WELDING OF REINFORCING BARS OR TORCHING TO BEND REINFORCING BARS SHALL BE ALLOWED WITHOUT SPECIFIC APPROVAL FROM THE STRUCTURAL ENGINEER.

C10. CONTRACTOR SHALL SUBMIT A CONCRETE PLACEMENT PLAN IDENTIFYING JOINT TYPES, JOINT LOCATIONS AND CONCRETE PLACEMENT SEQUENCE.

C11. ALL CAST IN PLACE AND POST-INSTALLED ANCHORS INDICATED IN THE STRUCTURAL DOCUMENTS SHALL COMPLY WITH APPENDIX D OF ACI 318 AND CHAPTER 19 OF THE IBC. ALL EXPANSION AND ADHESIVE ANCHORS SHALL HAVE THE ICC REPORT SHOWING EQUIVALENT LOAD CAPACITY. SUBMIT AND INSTALL PER THE ICC EVALUATION REPORT.

C12. PROVIDE ACI STANDARD HOOKS WHERE INDICATED ON DRAWINGS.

C13. FORMED CONSTRUCTION JOINTS SHALL BE KEYED. CONSTRUCTION JOINTS AT UNFORMED SURFACE SHALL BE ROUGHENED.

C14. A MINIMUM OF 48 HOURS SHALL ELAPSE BETWEEN PLACEMENT OF ADJACENT CONCRETE CONSTRUCTION AT JOINTS WHERE PLACEMENT IS INTERRUPTED.

C15. SEE SPECIFICATIONS FOR REQUIREMENTS RELATED TO MASS CONCRETE, INCLUDING MIX DESIGN, JOINING AND TEMPERATURE CONTROL.

C16. ALL CONCRETE SHALL BE WSI CURED FOR A MINIMUM 7 DAYS. SEE SPECIFICATIONS.

C17. UNLESS OTHERWISE NOTED, LAPS FOR REINFORCING SHALL BE 40 BAR DIAMETERS OR 1'-8" WHICHEVER IS GREATER.

C18. ALL GROUTED AREAS OVER 8" THICK SHALL BE REINFORCED WITH WELDED WIER MESH, 6x6-W2.0xW2.0 MATTS AT 8'-0" CIRS MAX.

MASONRY

M1. DESIGN STRENGTHS:
F'm= 1500 PSI
Fy= 60,000 PSI

M2. GROUT FOR FILLING MASONRY CAVITIES TO BE COARSE GROUT UNO, MAXIMUM COARSE AGGREGATE SIZE IS 3/8 INCH.

M3. GROUT POURS SHALL NOT EXCEED 4 FEET IN HEIGHT UNLESS CLEANOUTS ARE PROVIDED IN THE BOTTOM COURSE OF THE CELL(S) TO BE GROUTED, AND WRITTEN PERMISSION IS OBTAINED FOR HIGH LIFT GROUTING.

M4. RESTRICTED BAR ANCHORAGE:
IN CASES WHERE REINFORCING BARS CANNOT BE EXTENDED AS FAR AS REQUIRED, THE BARS SHALL EXTEND AS FAR AS POSSIBLE AND END IN STANDARD HOOK. SHOW ON SHOP DRAWINGS AND HIGHLIGHT WITH A BOX TO BRING TO ENGINEER'S ATTENTION.

M5. ANCHOR BOLTS:
ALL EXPANSION AND ADHESIVE ANCHORS SHALL HAVE THE ICC REPORT SHOWING EQUIVALENT LOAD CAPACITY. SUBMIT AND INSTALL PER THE ICC EVALUATION REPORT.

M6. IF BOND BEAMS AT INTERSECTING WALLS ARE SHOWN ON THE DRAWINGS TO MEET AT DIFFERENT ELEVATIONS, EXTEND REINFORCING OF BOTH BOND BEAMS AROUND INTERSECTING CORNER NOT LESS THAN 4 FEET IN EACH DIRECTION.

M7. LINTEL BLOCKS SHALL NOT BE USED AS BOND BEAM BLOCKS EXCEPT AT OPENINGS WHERE BOND BEAMS AND LINTELS COINCIDE.

STEEL

S1. DESIGN STRENGTHS:

WIDE FLANGE AND TEES:	Fy=50 KSI
PIPES:	Fy=35 KSI
STAINLESS STEEL	Fy=33 KSI
HSS SECTIONS	Fy=46 KSI
ALL OTHER PLATES AND SHAPES:	Fy=36 KSI

S2. DIMENSIONS:
TO CENTERLINES OF COLUMNS AND BEAMS, TOP SURFACES OF BEAMS AND TUBES AND BACKS OF CHANNELS AND ANGLES UNO.

S3. ELEVATIONS:
TOP OF STEEL REFERS TO TOP SURFACE OF MEMBER OR FLANGE UNO.

S4. WHEN FILLET WELD SIZE IS NOT INDICATED, PROVIDE MAXIMUM WELD SIZE BASED ON MATERIAL THICKNESS IN ACCORDANCE WITH AISC SPECIFICATIONS.

S5. ALL BOLTED STRUCTURAL CONNECTIONS ARE BEARING TYPE CONNECTIONS UNLESS OTHERWISE SPECIFIED TO BE SLIP-CRITICAL. PROVIDE LOAD INDICATING WASHERS AT SLIP-CRITICAL CONNECTIONS.

S6. CONFORM TO AISC 360, STEEL CONSTRUCTION MANUAL AND AISC 341, SEISMIC DESIGN MANUAL.

S7. ALL STEEL BEAMS SHALL RECEIVE STANDARD CAMBER PER THE SPECIFICATIONS UNLESS NOTED OTHERWISE ON THE PLANS. BEAMS REQUIRING SPECIAL CAMBER ARE DENOTED ON THE BEAMS SHOWN ON THE FRAMING PLANS. EXAMPLE: (+1/2") INDICATES ½".

S8. WELD ALL STRUCTURAL STEEL CONNECTIONS OR BOLT WITH ASTM A325-N BOLTS. BEAM CONNECTIONS SHALL BE EQUIVALENT TO "FRAMED BEAM CONNECTIONS" (AISC). WELDING SHALL CONFORM TO AWS "WELDING IN BUILDING CONSTRUCTION".

ALUMINUM

A1. STRUCTURAL ALUMINUM YIELD STRENGTHS
STRUCTURAL ALUMINUM: Fy=35 KSI
STRUCTURAL ALUMINUM IS ALLOY 6061-T6 UNO

A2. DIMENSIONS:
TO CENTERLINES OF COLUMNS AND BEAMS, TOP SURFACES OF BEAMS AND TUBES AND BACKS OF CHANNELS AND ANGLES UNO.

A3. ELEVATIONS:
TOP OF ALUMINUM REFERS TO TOP SURFACE OR FLANGE OF MEMBER UNO.

A4. WHEN FILLET WELD SIZE IS NOT INDICATED, PROVIDE MAXIMUM WELD SIZE FOR THE MATERIAL THICKNESS IN ACCORDANCE WITH THE LATEST EDITION OF THE "ALUMINUM DESIGN MANUAL" BY THE ALUMINUM ASSOCIATION.

A5. ALUMINUM IN CONTACT WITH DISSIMILAR MATERIALS OR CONCRETE:
CONTACT SURFACES SHALL BE PROVIDED WITH GALVANIC SEPARATION PER SPECIFICATIONS.

A6. ALUMINUM GRATING:
5.1 SIZE: 2" x 3/16" BEARING BARS AT 1 3/16" ON CENTER, UNO.
5.2 CLIPS AND BOLTS: STAINLESS STEEL, UNO.
5.3 OPENINGS THROUGH GRATING: REINFORCED AND BANDED AS REQUIRED TO MAINTAIN 200 PSF SUPERIMPOSED LIVE LOAD CAPACITY.
5.4 REQUIRED LIVE LOAD CAPACITY 200 PSF, W/ MAX DEFLECTION OF 1/4" WHEN SUPPORTING 100 PSF LIVE LOAD.

A7. ALL OPENINGS AND EDGES OF ALUMINUM GRATING SHALL BE SANDED.

A8. TO FACILITATE PIPE PLACEMENT, ALL CHECKERED PLATE SURROUNDING PIPE SHALL BE SUPPLIED IN TWO PIECES WITH STIFFENERS FOR ATTACHMENT.

PLAN NOTES

P1. SEE PROCESS/MECHANICAL DOCUMENTS FOR ALL PIPE SIZES, LOCATIONS AND PENETRATION DETAILS. SEE PROCESS/MECHANICAL DRAWINGS FOR FLOOR DRAIN LOCATIONS AND DETAILS.

P2. SEE PROCESS/MECHANICAL DRAWINGS FOR EQUIPMENT DETAILS. INCLUDING CONCRETE PAD LOCATIONS AND DIMENSIONS. SEE STRUCTURAL DETAILS FOR CONCRETE DETAILS.

P3. SEE PROCESS/ARCHITECTURAL FOR CONCRETE OPENING DIMENSIONS AND LOCATIONS. INCLUDING LOUVERS AND OTHER WALL PENETRATIONS.

P4. SEE CIVIL DRAWINGS FOR ALL EXTERIOR PAVING AND EARTHWORK.

P5. ALL GRATING AND WALKWAY PLATFORM FRAMING SHALL BE ALUMINUM EXCEPT IN LOCATIONS NOTED IN THE MEMBRANE BUILDING WHERE GRATING AND PLATFORM FRAMING IS FRP. GRATING DEPTH SHALL BE 2" UNLESS OTHERWISE NOTED.

P6. ALL PLATFORM FRAMING AND GRATING, FRAMING CONNECTIONS, AND CONNECTIONS TO CONCRETE SHALL BE PER STANDARD DETAILS.

P7. REFER PROCESS/MECHANICAL DRAWING FOR ALL GUARDRAIL LOCATIONS. REFER STANDARD DETAILS FOR GUARDRAIL DETAILS.

1 STRUCTURAL NOTES
12" = 1'-0"



WALL ENGINEERING
PO BOX 1457, DURANT, OK 74702
OKLAHOMA CA #5413 EXP. JUNE 30, 2023

SUBMITTAL / REVISIONS:

BY	DATE	SUBMITTAL/REVISION

SHAWNEE MUNICIPAL AUTHORITY
WASTEWATER SYSTEM IMPROVEMENTS
SHAWNEE, OKLAHOMA

GENERAL STRUCTURAL NOTES

PROJECT NO.
Project Number

DATE
Issue Date

DRAWN BY:
Author

CHECKED BY:
Designer

REVIEWED BY:
Checker

SCALE:

BAR IS ONE INCH ON ORIGINAL DRAWING
0" 1"
IF NOT ONE INCH ON THIS SHEET, ADJUST SCALES ACCORDINGLY

SHEET

G-S1

Project Number PRINT DATE: 6/22/2022 5:09:54 PM

MINIMUM LAP SPLICE LENGTHS f'c = 4000 psi					
BAR	* MIN BAR SPACING	LAPS FOR BARS SPACED GREATER THAN MIN BAR SPACING		LAPS FOR BARS SPACED CLOSER THAN MIN BAR SPACING	
		VERTICAL	OTHER	VERTICAL	OTHER
#3	3"	1'-4"	1'-6"	1'-4"	1'-6"
#4	3"	1'-7"	2'-0"	1'-8"	2'-2"
#5	3"	1'-11"	2'-6"	2'-7"	3'-4"
#6	4"	2'-4"	3'-0"	3'-8"	4'-9"
#7	4"	3'-6"	4'-6"	4'-11"	6'-5"
#8	4"	4'-7"	5'-11"	6'-6"	8'-6"
#9	4 1/2"	5'-9"	7'-6"	8'-3"	10'-9"
#10	5"	7'-4"	9'-6"	10'-6"	13'-7"
#11	5 5/8"	9'-0"	11'-8"	12'-10"	16'-8"

LAP SPLICE LEGEND:

LAP SPLICE

LOCATION WHERE NUMBER OF BARS CHANGES

NOTES:

1. ALL REBAR SPLICE LENGTHS SHALL BE AS SHOWN UNDER HEADING "VERTICAL" EXCEPT IF SPLICED BARS ARE HORIZONTAL BARS WITH 12" OR MORE CONCRETE BELOW. THEN SPLICE LENGTH SHALL BE AS SHOWN UNDER HEADING "OTHER".
2. *AT SPLICES THE BAR SPACING IS THE CENTER TO CENTER DISTANCE BETWEEN ADJACENT REBAR.
3. ALL SPLICES SHALL BE CONTACT SPLICES AND WIRED TOGETHER.
4. NO WELDED OR MECH SPLICES ARE PERMITTED UNLESS INDICATED OTHERWISE.
5. UNLESS OTHERWISE SHOWN, SPLICES FOR BOTTOM REINF BARS IN BEAM AND SLABS SHALL BE CENTERED OVER THE SUPPORTS. SPLICES FOR TOP REINFORCING BARS SHALL BE LOCATED ON THE CENTERLINE OF SPAN.

1 CONCRETE REINFORCING LAP SPLICE SCHEDULE
12" = 1'-0"

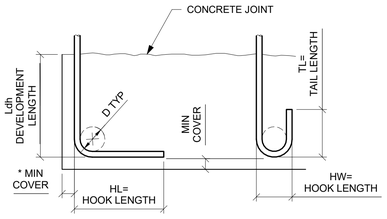

90 DEG STD HOOK 180 DEG STD HOOK

BAR SIZE GRADE 60	HL	HW	TL	D	f'c=4.0 OR 4.5 KSI
					Ldh *
#3	6"	3"	3"	2 1/4"	6"
#4	8"	4"	4 1/2"	3"	7"
#5	10"	5"	5"	3 3/4"	9"
#6	1'-0"	6"	6"	4 1/2"	10"
#7	1'-2"	7"	7"	5 1/4"	12"
#8	1'-4"	8"	8"	6"	14"
#9	1'-7"	11 3/4"	10 1/2"	9 1/2"	15"
#10	1'-10"	1'-1 1/4"	11 1/2"	10 3/4"	17"
#11	2'-0"	1'-2 3/4"	1'-1"	12"	19"

* COMPLYING WITH MINIMUM COVER REQUIREMENTS OF ACI 318, 12.5.3. OTHERWISE Ldh MUST BE RE-CALCULATED.

3 REINFORCING HOOK SCHEDULE
12" = 1'-0"

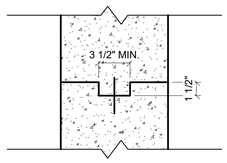

5 STD. KEYED CONSTRUCTION JOINT W/ WATERSTOP
1 1/2" = 1'-0"

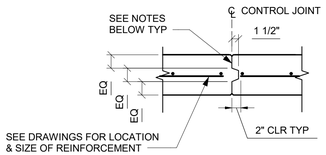

NON-WATER BEARING WALL OR SLAB LESS THAN 10" THICK

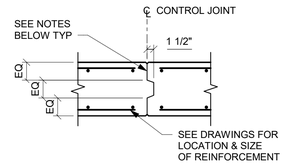

NON-WATER BEARING SLAB OR WALL 10" THICK OR GREATER

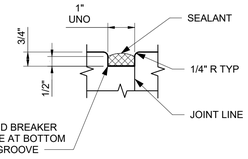

SEALANT DETAIL

NOTES:

1. COAT CONCRETE JOINT SURFACES WITH BOND BREAKER COMPOUND.
2. FOR WALLS, FORM ALL JOINT EDGES AT 1/2" CHAMFER.
3. FOR SLABS, EDGE TOP OF EXPOSED SLAB JOINT AT 1/4" RADIUS.
4. FOR UNDERSIDE OF EXPOSED SLABS, FORM JOINT EDGES AT 1/2" CHAMFER.

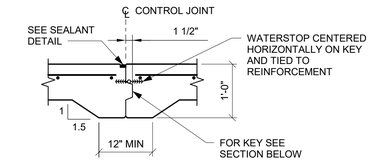

WATER BEARING SLAB LESS THAN 12" THICK

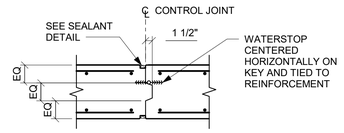

PROVIDE SINGLE REINF MAT FOR WALLS WHEN THICKNESS IS LESS THAN 10". REINFORCING AS SPECIFIED

WATER BEARING SLAB OR WALL

2 CONTROL JOINT (CJ)
3/4" = 1'-0"

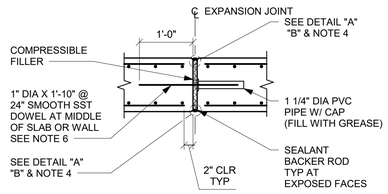

NON-WATER BEARING SLAB OR WALL

NOTES:

1. FOR WALLS, FORM ALL JOINT EDGES AT 1/2" CHAMFER.
2. FOR UNDER SIDE OF EXPOSED SLABS, FORM JOINT EDGES AT 1/2" CHAMFER.
3. FOR SLABS, PROVIDE 1/4" RADIUS TOOLED EDGES AT TOP SURFACE.
4. USE DETAIL "B" AT UNDERSIDE OF SLABS ON GRADE ONLY. USE DETAIL "A" AT ALL OTHER LOCATIONS.
5. "W" = 1" WIDE UNLESS OTHERWISE INDICATED ON THE DRAWINGS.
6. SMOOTH DOWEL AND PVC ASSEMBLY AT EXPANSION JOINTS SHALL USE GREENSTREAK "SPEED DOWEL" NO. PSD12/#7TX (BASE CODE PSD/#7BX).

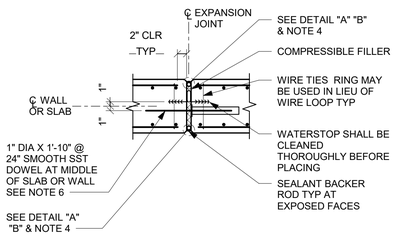

WATER BEARING SLAB OR WALL

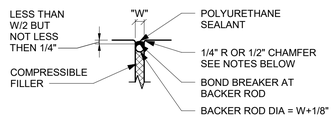

DETAIL "A" EXPOSED FACE

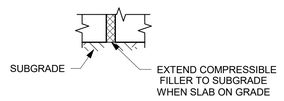

DETAIL "B" SOIL SIDE

4 CONCRETE EXPANSION JOINTS WITH SEALANT (EJ)
3/4" = 1'-0"

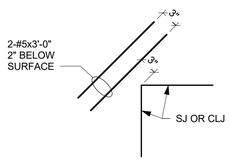

RE-ENTRANT CORNER

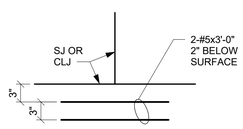

DISCONTINUOUS JOINT INTERSECTION

6 ADDITIONAL SLAB REINFORCING
1" = 1'-0"

WALL ENGINEERING
PO BOX 1457, DURANT, OK 74702
OKLAHOMA CA #5413 EXP. JUNE 30, 2023

SUBMITTAL / REVISIONS:

BY	DATE	SUBMITTAL/REVISION

SHAWNEE MUNICIPAL AUTHORITY
WASTEWATER SYSTEM IMPROVEMENTS
SHAWNEE, OKLAHOMA

GENERAL STRUCTURAL STANDARD DETAILS I

PROJECT NO.
Project Number

DATE
Issue Date

DRAWN BY:
Author

CHECKED BY:
Designer

REVIEWED BY:
Checker

SCALE:

BAR IS ONE INCH ON ORIGINAL DRAWING
0 1"
IF NOT ONE INCH ON THIS SHEET, ADJUST SCALES ACCORDINGLY

SHEET

G-S2

REGISTERED PROFESSIONAL ENGINEER
Stacy Lee Wall
18558
OKLAHOMA

Project Number PRINT DATE: 6/22/2022 5:09:55 PM

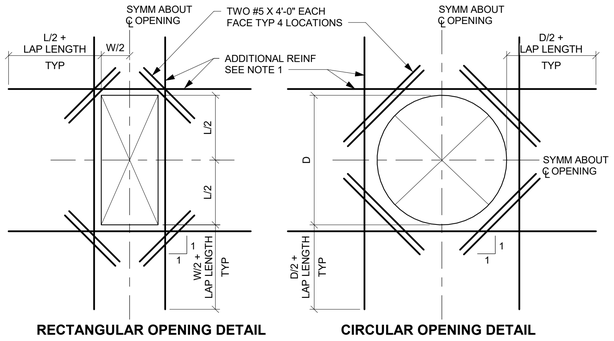

RECTANGULAR OPENING DETAIL

CIRCULAR OPENING DETAIL

NOTES:

1. PROVIDE ADDITIONAL REINFORCING THE SAME SIZE AS DISCONTINUOUS REINFORCEMENT AT OPENING. QUANTITY OF REINFORCING IN EACH DIRECTION SHALL BE EQUAL TO OR ONE GREATER THAN THE NUMBER OF DISCONTINUOUS BARS. PLACE 1/2 OF ADDITIONAL REINFORCING BARS EACH SIDE OF OPENING, PLACE ADDITIONAL REINFORCEMENT AT 3" OC (TYPICAL BOTH DIRECTIONS AND ALL LAYERS OF REINFORCEMENT). START FIRST BAR 2" CLEAR TO OPENING.
2. EXTEND ADDITIONAL REINFORCING BEYOND EDGE OF OPENING AS SHOWN ABOVE. ADDITIONAL BARS MAY TERMINATE AT THE END OF THE WALL WITH A STANDARD HOOK WHERE THE LENGTH OF THE WALL WILL NOT PERMIT BARS TO EXTEND AS SHOWN ABOVE.
3. TYPICAL WALL OR SLAB REINFORCING NOT SHOWN FOR CLARITY. TERMINATE TYPICAL REINFORCING 2" CLEAR TO OPENING.
4. OPENINGS 12" OR LESS IN SLABS AND WALLS, NO EXTRA REBARS ARE REQUIRED UNLESS SHOWN OTHERWISE. TYPICAL REINFORCING SHALL BE RESPACED (NOT CUT) TO ALLOW FOR OPENINGS TO BE MADE.
5. UNLESS SHOWN OTHERWISE ON DRAWINGS, PROVIDE EXTRA REINFORCING AROUND OPENINGS AS SHOWN AND INDICATED ABOVE.
6. PROVIDE ADDITIONAL DOWELS PER NOTE 1 ABOVE FOR ALL OPENINGS NEAR THE FLOOR SLAB, BASE SLAB, OR CORNERS.

1 EXTRA REINFORCING AROUND OPENINGS

12" = 1'-0"

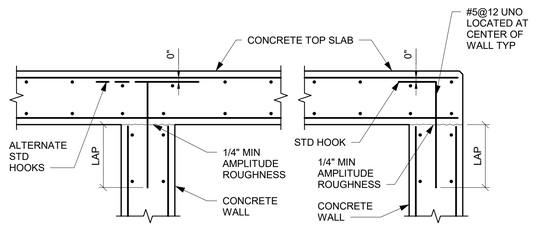

NOTE:

1. ALL HOOKS SHALL BE STD 90 DEGREE HOOKS.

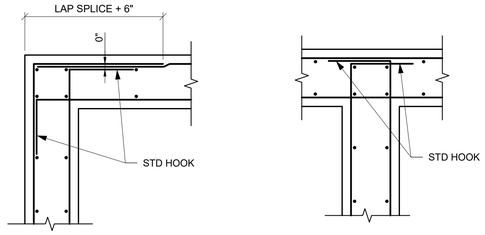

NOTES:

1. ALL HOOKS SHALL BE STD 90 DEGREE HOOKS.
2. SEE DRAWINGS FOR ADDITIONAL HORIZONTAL BARS. STAGGER BETWEEN TYPICAL REINF SPACING, EXTEND TO 1/5 OF DISTANCE TO NEAREST ADJACENT WALL IN EACH DIRECTION, UNO.
3. OPTIONAL LAP LOCATION. APPLIES TO BOTH DOUBLE AND SINGLE LAYER CONDITIONS TYP.

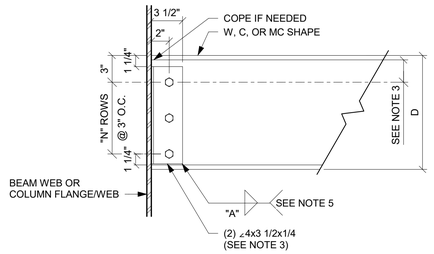

STANDARD BOLTED CONNECTION SCHEDULE		
NOMINAL BEAM SIZE "D"	NUMBER OF BOLT ROWS	WELD SIZE
W8	"N"	3/16"
W10	2	3/16"
W12	2	3/16"
W14	3	3/16"
W16	3	1/4"
W18	3	1/4"
W21	4	1/4"
W24	4	1/4"
W27	4	1/4"
W30	5	5/16"
W33	5	5/16"
W36	6	5/16"
	6	

NOTES:

1. ALL BOLTS SHALL BE 3/4" DIA. A325-N UNLESS NOTED OTHERWISE.
2. PROVIDE MINIMUM NUMBER OF BOLT ROWS "N" SHOWN AS THE TYPICAL CONNECTION. INCREASE NUMBER OF ROWS AND/OR BOLT DIA. IF INDICATED ON PLANS.
3. MINIMUM DISTANCE FROM CENTER LINE OF TOP BOLT TO A COPE SHALL BE 1 1/2". WHERE DEEP COPES ARE REQUIRED INCREASE DISTANCE FROM TOP OF BEAM TO CENTER LINE OF TOP BOLT.
4. USE STANDARD OR SHORT HORIZONTAL SLOTTED HOLES AS REQUIRED.
5. WELD DOUBLE ANGLES TO BEAM WEB IN LIEU OF BOLTING AT CONTRACTORS OPTION.

2 TYPICAL BEAM CONNECTION

1 1/2" = 1'-0"

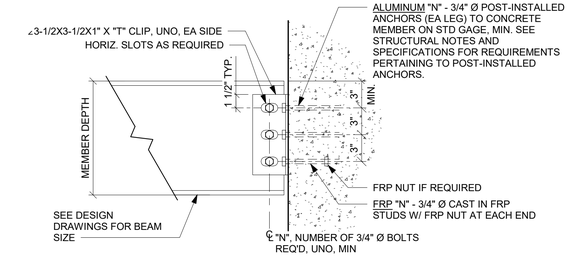

MEMBER DEPTH	"N"	"T" (3)
4", 6"	1	1/4"
8" THRU 10"	2	1/4"
12" THRU 16"	3	5/16"
18" THRU 24"	5	5/16"
27" THRU 30"	8	5/16"

NOTE:
DOUBLE-SIDE CONNECTIONS SHALL BE REQUIRED EXCEPT WHERE SPECIFICALLY SHOWN OR PERMITTED TO BE SINGLE-SIDED. CONNECTION ANGLES SHALL BE 1/8" (MIN) GREATER IN THICKNESS THAN WEB OF CONNECTED MEMBER FOR SINGLE SIDE CONNECTIONS.

3 HINGED TOP SLAB

3/4" = 1'-0"

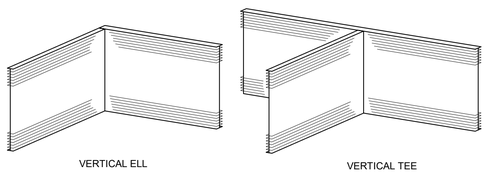

NOTES:

1. BULB TYPE WATERSTOPS SHALL BE HANDLED SIMILAR TO AS SHOWN WITH BULB JOINTSMITERED FOR FULL CONTINUITY OF HOLLOW BULB.
2. ONLY STRAIGHT BUTT JOINT WELDS ARE ALLOWED IN THE FIELD.

4 WALL REINFORCEMENT AT CORNERS & INTERSECTIONS

3/4" = 1'-0"

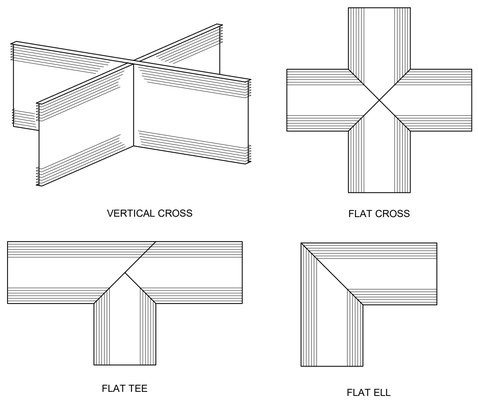

5 BEAM TO CONCRETE CONNECTION

1 1/2" = 1'-0"

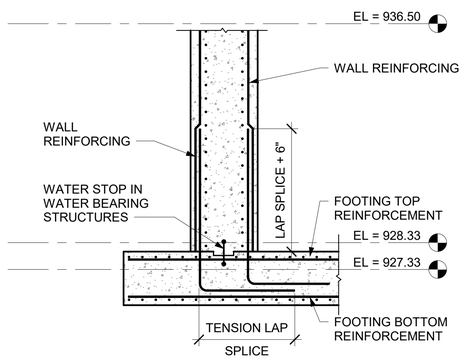

6 SHOP FABRICATED WATERSTOP

3/4" = 1'-0"

7 WALL-FOOTING INTERSCTION

3/8" = 1'-0"



WALL ENGINEERING
PO BOX 1457, DURANT OK 74702
OKLAHOMA CA #5413 EXP. JUNE 30, 2023

SUBMITTAL / REVISIONS:

DATE	BY	SUBMITTAL/REVISION

SHAWNEE MUNICIPAL AUTHORITY
WASTEWATER SYSTEM IMPROVEMENTS
SHAWNEE, OKLAHOMA

GENERAL STRUCTURAL STANDARD DETAILS II

PROJECT NO.	Project Number
DATE	Issue Date
DRAWN BY:	Author
CHECKED BY:	Designer
REVIEWED BY:	Checker
SCALE:	

BAR IS ONE INCH ON ORIGINAL DRAWING
0" 1"
IF NOT ONE INCH ON THIS SHEET, ADJUST SCALES ACCORDINGLY

SHEET

G-S3

Project Number PRINT DATE: 6/22/2022 5:09:57 PM

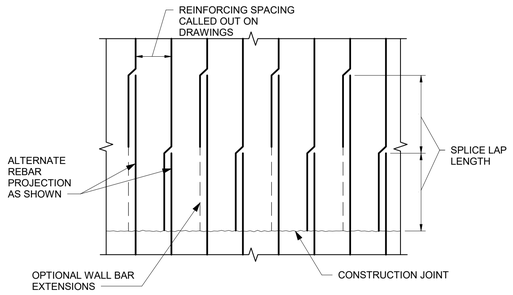

1 STAGGERED REINFORCING AT CONSTRUCTION JOINT
12" = 1'-0"

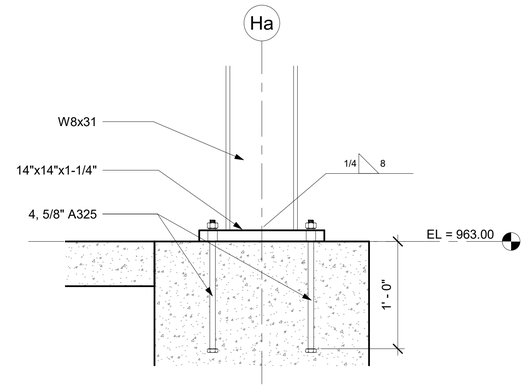

6 RAIL CRANE FRAME - BASEPLATE DETAIL
1 1/2" = 1'-0"

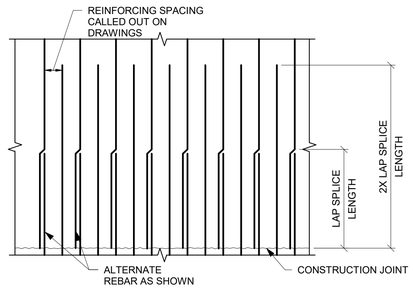

2 WALL VERTICAL REINFORCING AT CONSTRUCTION JOINT
12" = 1'-0"

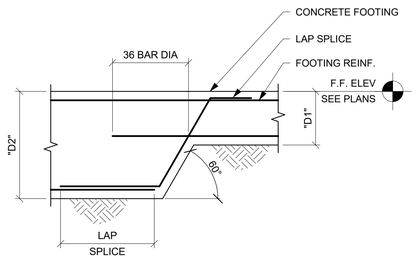

NOTE:

1. FOR FTG EL, DEPTH AND REINF, SEE PLANS AND TYP FTG DET.

3 TYPICAL BOTTOM STEP FOOTING
3/4" = 1'-0"

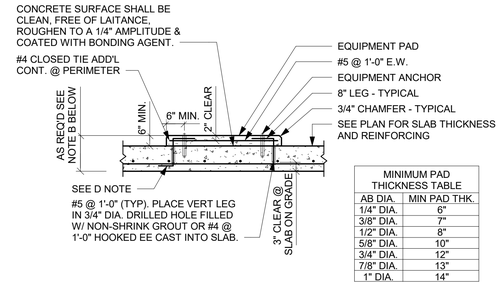

MINIMUM PAD THICKNESS TABLE	
AB DIA.	MIN PAD THK.
1/4" DIA.	6"
3/8" DIA.	7"
1/2" DIA.	8"
5/8" DIA.	10"
3/4" DIA.	12"
7/8" DIA.	13"
1" DIA.	14"

NOTES:

A. PROVIDE ABOVE PAD UNDER ALL ELECTRICAL AND MECHANICAL EQUIPMENT SUPPORTED ON STRUCTURAL SLABS. ALSO PROVIDE FOR EQUIPMENT WEGHING LESS THAN 5000 POUNDS WHICH ARE SUPPORTED ON GRADE OR WHERE SPECIFICALLY NOTED ON PLANS.
B. PAD THICKNESS SHALL BE THE LARGER OF 6" OR MINIMUM PAD THICKNESS FROM TABLE. PROVIDE AN ADDITIONAL LAYER OF #5 @ 1'-0" EACH WAY WITH 1-1/2" CLEAR TOP AND BOTTOM FOR EACH 4" ADDITIONAL PAD THICKNESS EXCEEDING THE 6" MIN. THICKNESS.
C. THIS DETAIL SHOULD BE USED FOR PADS UP TO 14" HIGH. ANCHOR SIZES TO FOLLOW THE RECOMMENDATION OF THE EQUIPMENT MANUFACTURERE, IF NO SIZES ARE GIVEN, USE SIZES SHOWN ON THE DETAIL.
D. FOR EQUIPMENT BASES ON NEW SLABS PROVIDE #5 DOWELS HAVING TWO HOOKED ENDS AT 1'-0" CENTERS AROUND PERIMETER OF EQUIPMENT BASE, UNLESS APPROVED OTHERWISE.
E. BEFORE EQUIPMENT SUPPORT PADS ARE CAST, THE PAD SIZES AND REINFORCING SHALL BE APPROVED BY THE ENGINEER AS BEING CAPABLE OF SUPPORTING EQUIPMENT TO BE PLACED THEREON. EQUIPMENT BASE DIMENSIONS SHALL BE THE LARGER OF:
   a. AS DETERMINED BY THE EQUIPMENT MANUFACTURER OR
   b. AS INDICATED ON THE DRAWINGS. CONTRACTOR SHALL COORDINATE EQUIPMENT PADS WITH EQUIPMENT SUPPLIED. THE SIZE, NUMBER, TYPE, LOCATION, AND THREAD PROJECTION OF THE ANCHORS SHALL BE AS DETERMINED BY THE EQUIPMENT MANUFACTURER. SUBMIT DATA TO ENGINEER FOR RECORD PURPOSES ONLY. ANCHORS SHALL BE HELD IN POSITION WITH A TEMPLATE WHILE EQUIPMENT PAD IS CAST.

5 EQUIPMENT SUPPORT PAD DETAIL - TYPICAL
1/2" = 1'-0"



WALL ENGINEERING
PO BOX 1457, DURANT, OK 74702
OKLAHOMA CA #5413 EXP. JUNE 30, 2023

SUBMITTAL / REVISIONS:
BY — SUBMITTAL/REVISION
DATE

SHAWNEE MUNICIPAL AUTHORITY
WASTEWATER SYSTEM IMPROVEMENTS
SHAWNEE, OKLAHOMA

GENERAL STRUCTURAL STANDARD DETAILS III

PROJECT NO.
Project Number

DATE
Issue Date

DRAWN BY:
Author

CHECKED BY:
Designer

REVIEWED BY:
Checker

SCALE:

BAR IS ONE INCH ON ORIGINAL DRAWING
0" 1"
IF NOT ONE INCH ON THIS SHEET, ADJUST SCALES ACCORDINGLY

SHEET

G-S4

Project Number PRINT DATE: 6/22/2022 5:09:58 PM

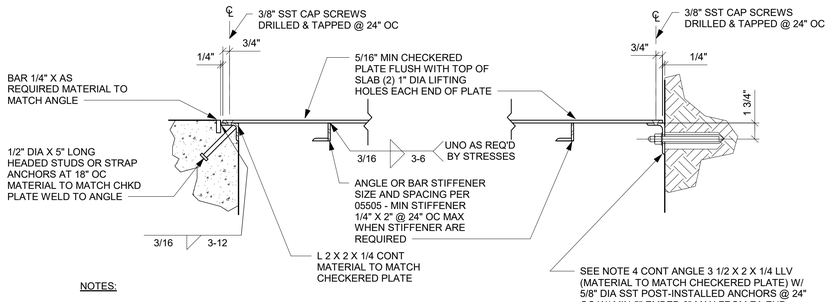

NOTES:

1. CHECKERED PLATE SIZE TO BE DETERMINED BY CONTRACT DOCUMENTS.
2. FIELD DRILL HOLES FOR SCREWS AT CONTRACTORS OPTION.
3. PROVIDE DISSIMILAR MATERIAL PROTECTION FOR ALUMINUM IN CONTACT WITH CONCRETE PER SPECIFICATION.
4. ONLY TO BE USED AT CONTINUOUS WALL ABOVE CHECKERED PLATE OR AT PRE-EXISTING CONCRETE CONSTRUCTION.

1 CHECKERED PLATE SUPPORT
1 1/2" = 1'-0"

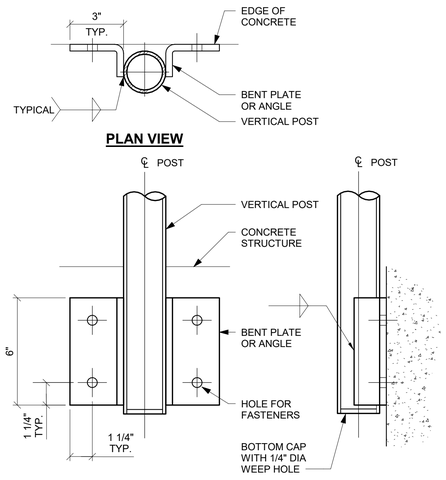

NOTE:

1. TOEBOARD NOT SHOWN.

4 GUARDRAIL POST DETAIL @ CONCRETE
3" = 1'-0"

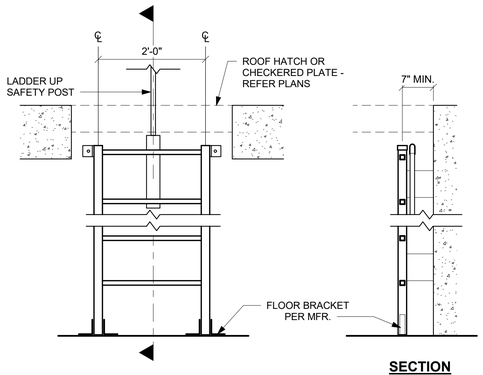

3 FLOOR SUPPORTED ALUMINUM LADDER
3/4" = 1'-0"

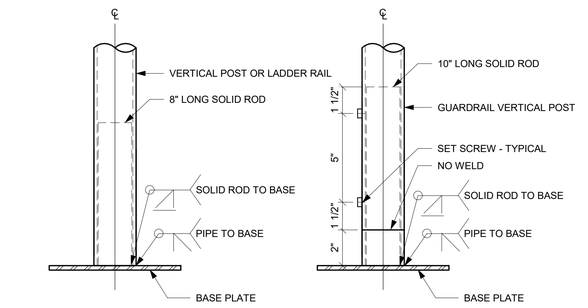

NOTE:

1. TOEBOARD NOT SHOWN.

6 GUARDRAIL POST & BASE PLATE
3" = 1'-0"

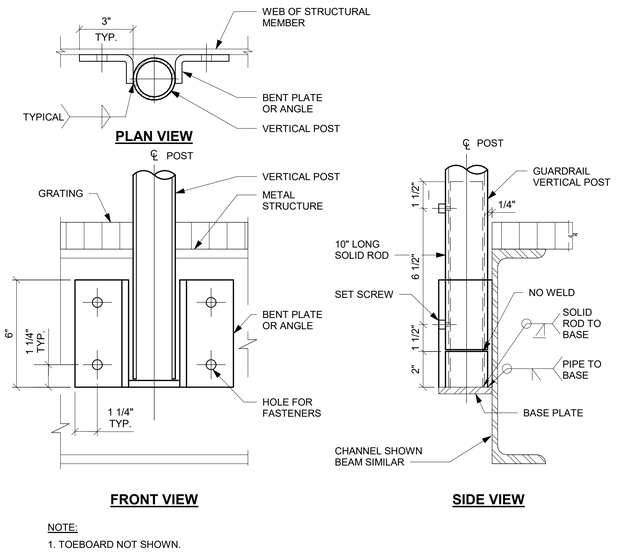

NOTE:

1. TOEBOARD NOT SHOWN.

5 REMOVABLE GUARDRAIL POST @ ALUM. PLATFORM
3" = 1'-0"

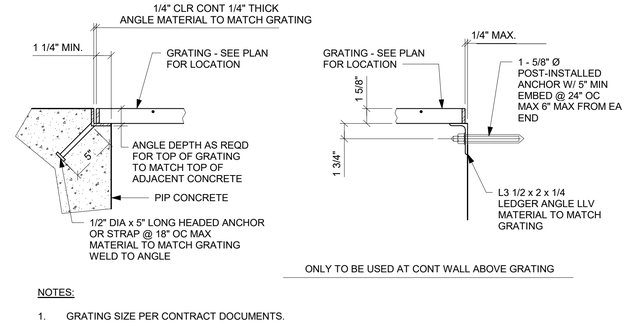

ONLY TO BE USED AT CONT WALL ABOVE GRATING

NOTES:

1. GRATING SIZE PER CONTRACT DOCUMENTS.
2. ALL ENDS AND OPENINGS SHALL BE BANDED, SEE SPECIFICATION.
3. ATTACH GRATING TO ALL SUPPORT ANGLES WITH BOLTED CLIPS, SPACED AT 2'-0" MAX CENTERS.
4. PROVIDE DISSIMILAR MATERIAL PROTECTION FOR ALUMINUM IN CONTACT WITH CONCRETE PER SPECIFICATION.

2 GRATING AND SUPPORT DETAIL
1 1/2" = 1'-0"



WALL ENGINEERING
PO BOX 1457, DURANT, OK 74702
OKLAHOMA CA #5413 EXP. JUNE 30, 2023

SUBMITTAL / REVISIONS:

BY	DATE	SUBMITTAL/REVISION

SHAWNEE MUNICIPAL AUTHORITY
WASTEWATER SYSTEM IMPROVEMENTS
SHAWNEE, OKLAHOMA

GENERAL STRUCTURAL STANDARD DETAILS IV

PROJECT NO.
Project Number

DATE
Issue Date

DRAWN BY:
Author

CHECKED BY:
Designer

REVIEWED BY:
Checker

SCALE:

BAR IS ONE INCH ON ORIGINAL DRAWING
0" 1"
IF NOT ONE INCH ON THIS SHEET, ADJUST SCALES ACCORDINGLY

SHEET

G-S5

Project Number PRINT DATE: 6/22/2022 5:09:59 PM

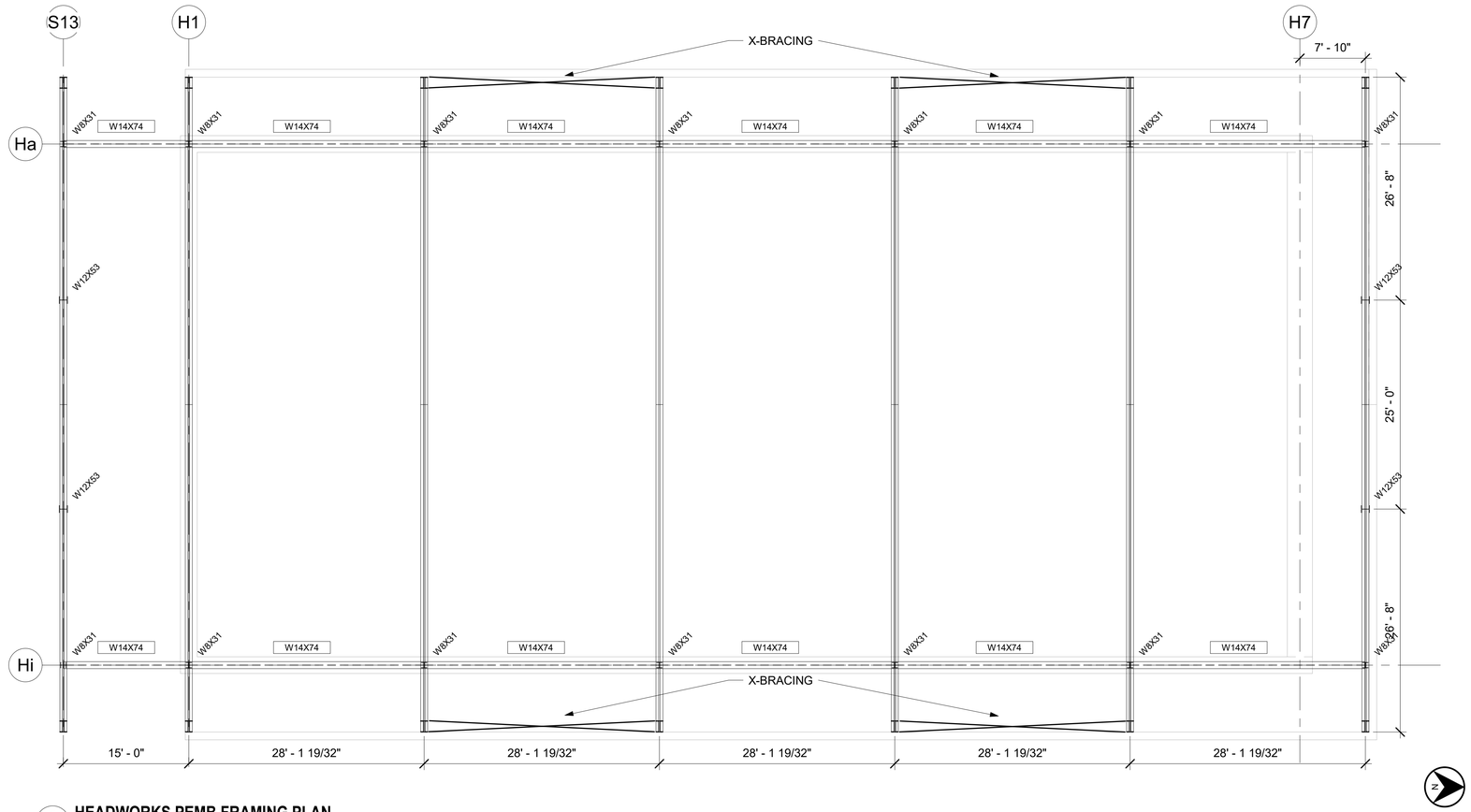

1 **HEADWORKS PEMB FRAMING PLAN**
1/8" = 1'-0"

WALL ENGINEERING
PO BOX 1457, DURANT, OK 74702
OKLAHOMA CA #5413 EXP. JUNE 30, 2023

SUBMITTAL / REVISIONS:

DATE	BY	SUBMITTAL/REVISION

SHAWNEE MUNICIPAL AUTHORITY
WASTEWATER SYSTEM IMPROVEMENTS
SHAWNEE, OKLAHOMA

HEADWORKS FRAMING PLAN

PROJECT NO.
Project Number

DATE
Issue Date

DRAWN BY:
Author

CHECKED BY:
Designer

REVIEWED BY:
Checker

SCALE:

BAR IS ONE INCH ON ORIGINAL DRAWING
0' 1'
IF NOT ONE INCH ON THIS SHEET, ADJUST SCALES ACCORDINGLY

SHEET

HW-S1

Project Number PRINT DATE: 6/22/2022 5:09:59 PM

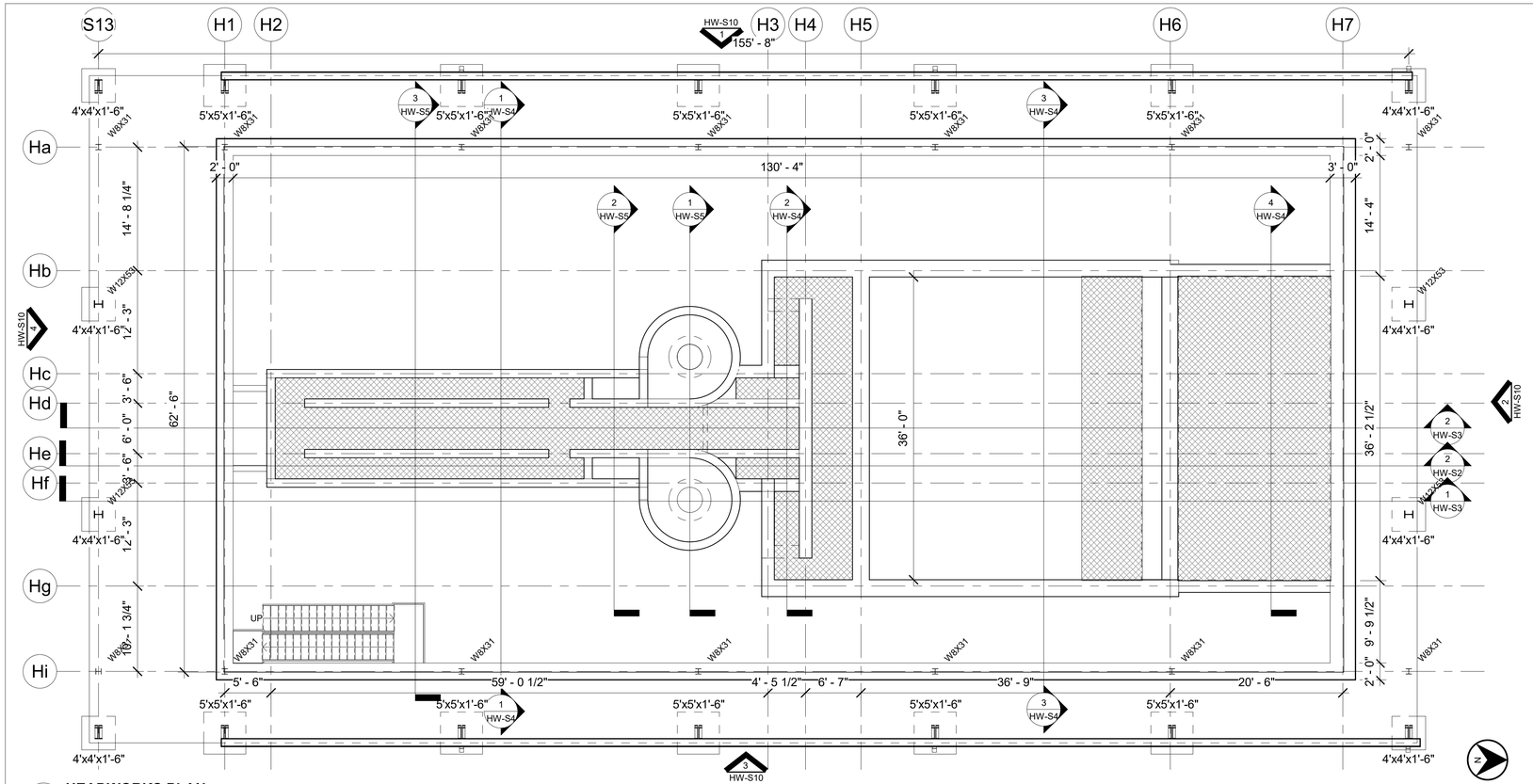

1 HEADWORKS PLAN

1/8" = 1'-0"

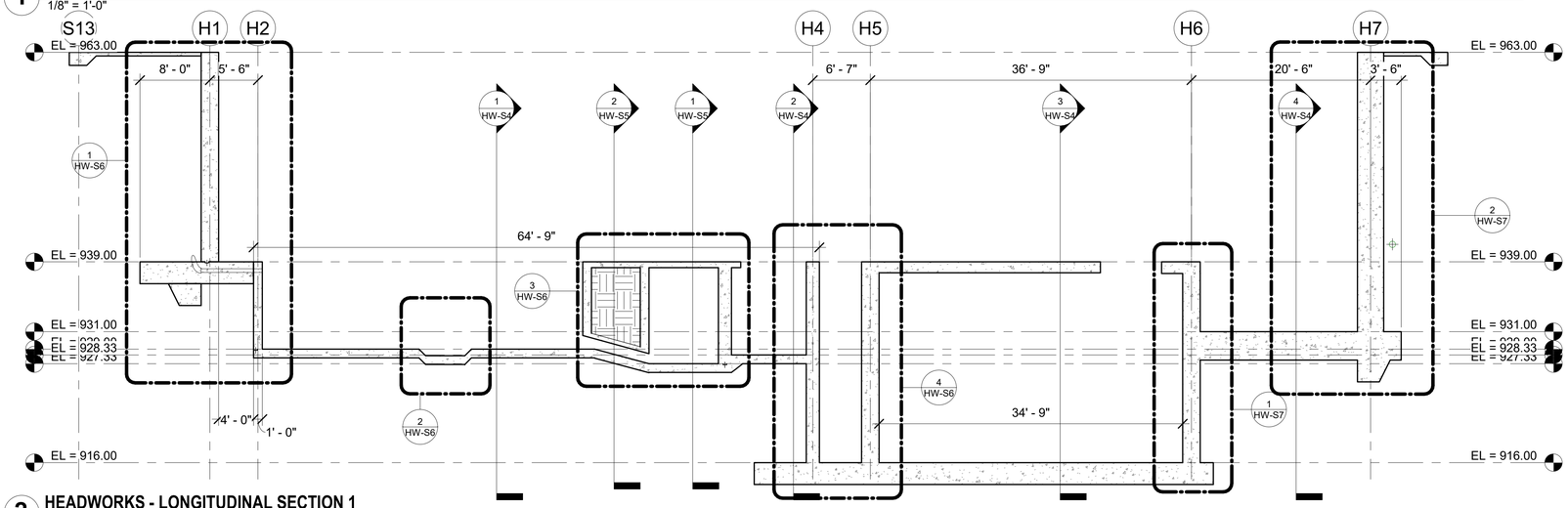

2 HEADWORKS - LONGITUDINAL SECTION 1

1/8" = 1'-0"

Project Number PRINT DATE: 6/22/2022 5:10:01 PM

WALL ENGINEERING
PO BOX 1457, DURANT OK 74702
OKLAHOMA CA #5413 EXP. JUNE 30, 2023

SUBMITTAL / REVISIONS:
DATE | BY | SUBMITTAL/REVISION

SHAWNEE MUNICIPAL AUTHORITY
WASTEWATER SYSTEM IMPROVEMENTS
SHAWNEE, OKLAHOMA

HEADWORKS PLAN & SECTION

PROJECT NO.
Project Number

DATE
Issue Date

DRAWN BY:
Author

CHECKED BY:
ARCHITECTURAL

REVIEWED BY:
Checker

SCALE:

BAR IS ONE INCH ON ORIGINAL DRAWING
0" 1"
IF NOT ONE INCH ON THIS SHEET, ADJUST SCALES ACCORDINGLY

SHEET

HW-S2

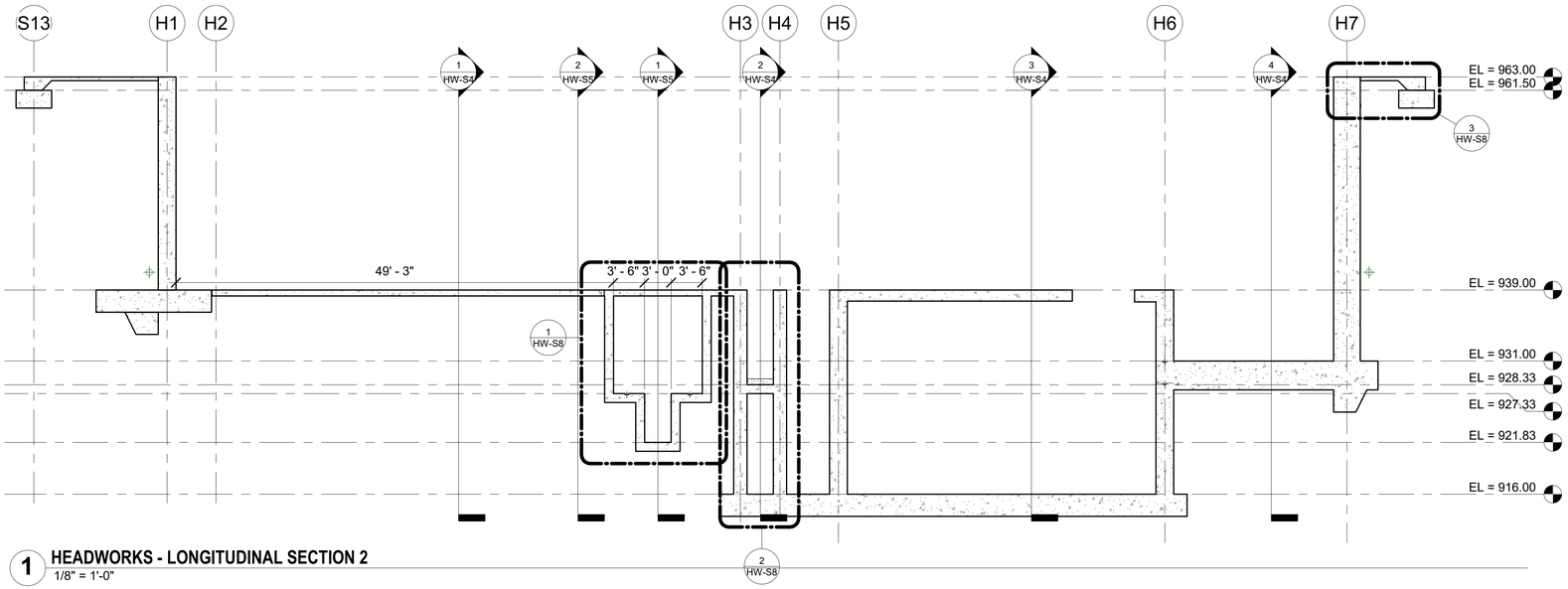

1 **HEADWORKS - LONGITUDINAL SECTION 2**
1/8" = 1'-0"

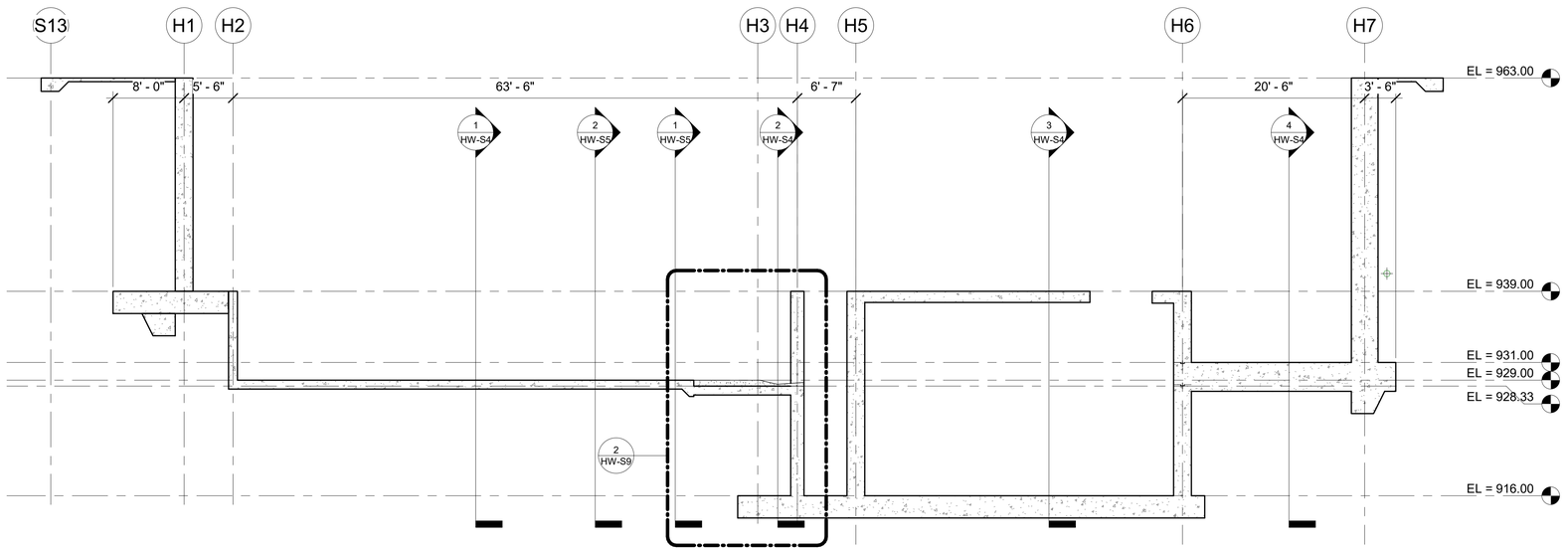

2 **HEADWORKS - LONGITUDINAL SECTION 3**
1/8" = 1'-0"

WALL ENGINEERING
PO BOX 1457, DURANT OK 74702
OKLAHOMA CA #5413 EXP. JUNE 30, 2023

SUBMITTAL / REVISIONS:
DATE | BY | SUBMITTAL/REVISION

SHAWNEE MUNICIPAL AUTHORITY
WASTEWATER SYSTEM IMPROVEMENTS
SHAWNEE, OKLAHOMA

HEADWORKS BUILDING SECTIONS

PROJECT NO.
Project Number

DATE
Issue Date

DRAWN BY:
Author

CHECKED BY:
Designer

REVIEWED BY:
Checker

SCALE:

BAR IS ONE INCH ON ORIGINAL DRAWING
0" 1"
IF NOT ONE INCH ON THIS SHEET, ADJUST SCALES ACCORDINGLY

SHEET

HW-S3

Project Number PRINT DATE: 6/22/2022 5:10:02 PM

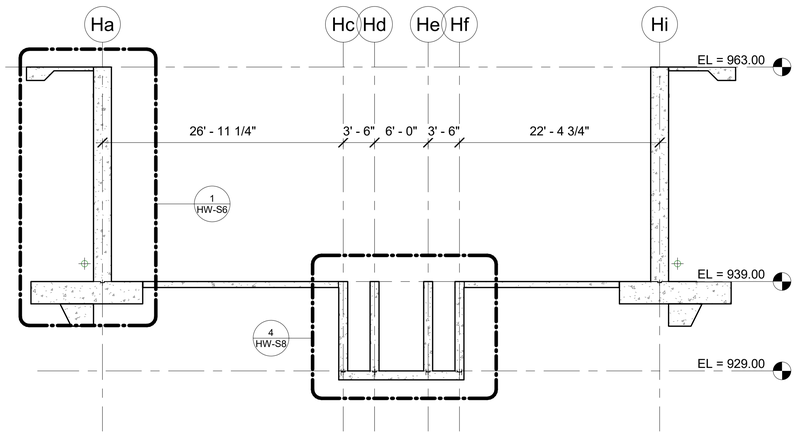

1 HEADWORKS - TRANSVERSE SECTION 1
1/8" = 1'-0"

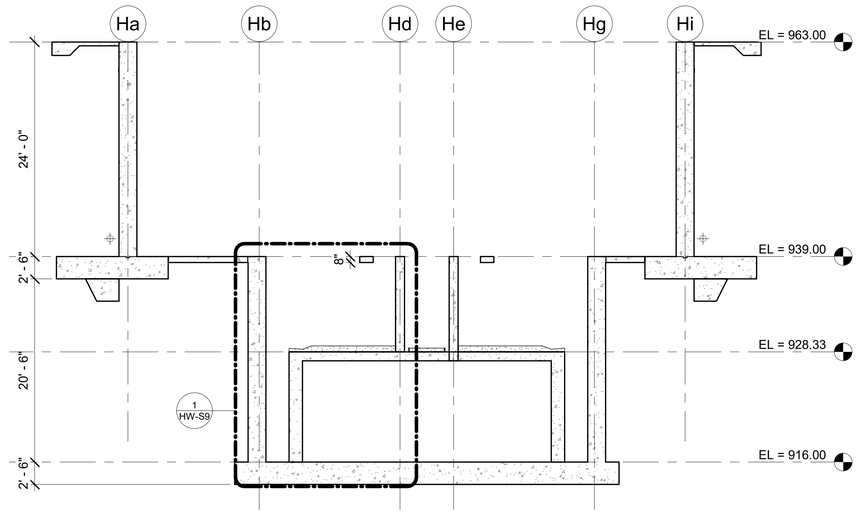

2 HEADWORKS - TRANSVERSE SECTION 2
1/8" = 1'-0"

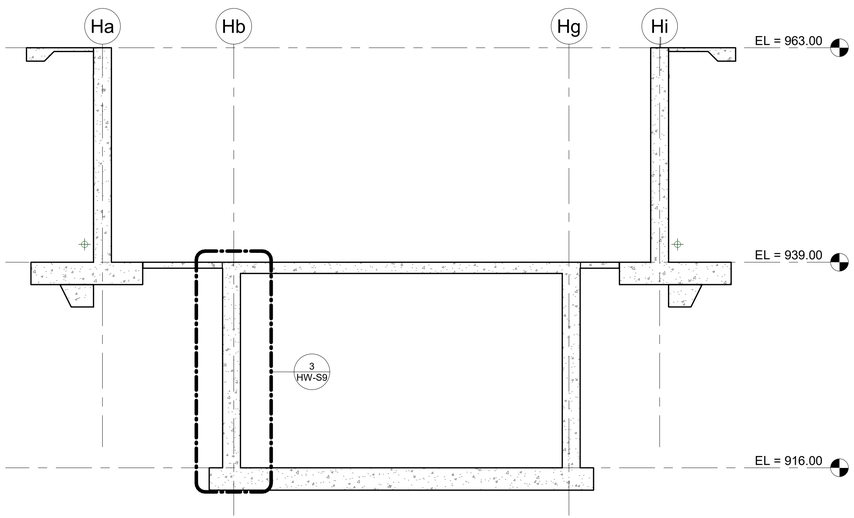

3 HEADWORKS - TRANSVERSE SECTION 3
1/8" = 1'-0"

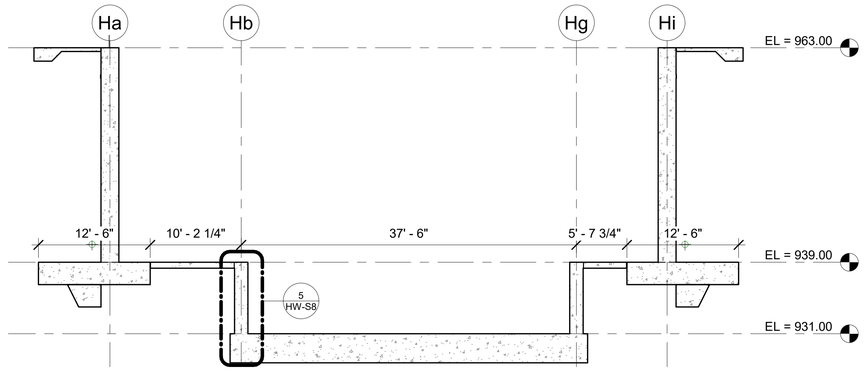

4 HEADWORKS - TRANSVERSE SECTION 4
1/8" = 1'-0"

WALL ENGINEERING
PO BOX 1457, DURANT OK 74702
OKLAHOMA CA #5413 EXP. JUNE 30, 2023

SUBMITTAL / REVISIONS:
DATE | BY | SUBMITTAL/REVISION

SHAWNEE MUNICIPAL AUTHORITY
WASTEWATER SYSTEM IMPROVEMENTS
SHAWNEE, OKLAHOMA

HEADWORKS BUILDING SECTIONS

PROJECT NO.
Project Number
DATE
Issue Date
DRAWN BY:
Author
CHECKED BY:
Designer
REVIEWED BY:
Checker
SCALE:

BAR IS ONE INCH ON ORIGINAL DRAWING
0" 1"
IF NOT ONE INCH ON THIS SHEET, ADJUST SCALES ACCORDINGLY

SHEET
HW-S4

Project Number PRINT DATE: 6/22/2022 5:10:03 PM

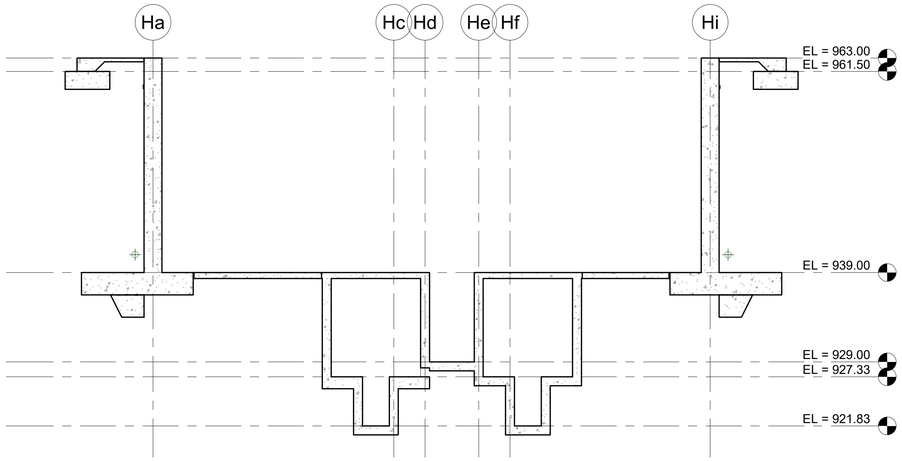

1 HEADWORKS - TRANSVERSE SECTION 5
1/8" = 1'-0"

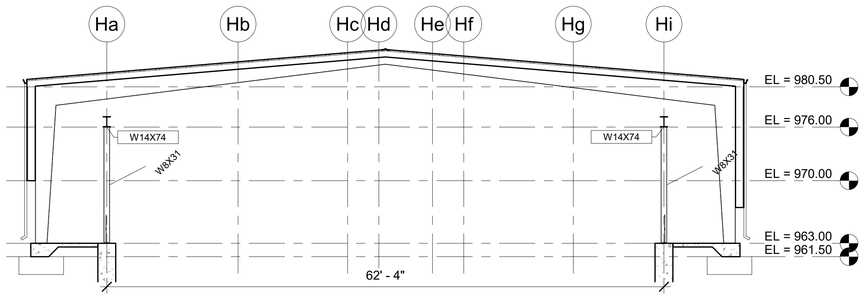

3 HEADWORKS PEMB - TRANSVERSE SECTION 7
1/8" = 1'-0"

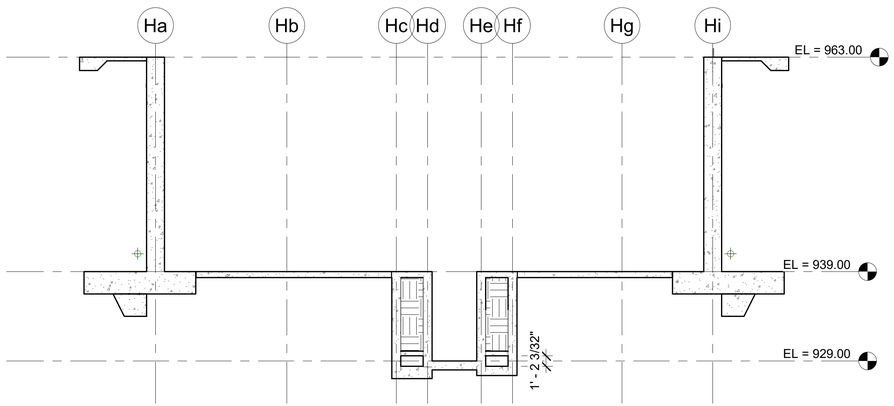

2 HEADWORKS - TRANSVERSE SECTION 6
1/8" = 1'-0"



WALL ENGINEERING
PO BOX 1457, DURANT, OK 74702
OKLAHOMA CA #5413 EXP. JUNE 30, 2023

SUBMITTAL / REVISIONS:

DATE	BY	SUBMITTAL/REVISION

SHAWNEE MUNICIPAL AUTHORITY
WASTEWATER SYSTEM IMPROVEMENTS
SHAWNEE, OKLAHOMA

HEADWORKS BUILDING SECTIONS

PROJECT NO.
Project Number

DATE
Issue Date

DRAWN BY:
Author

CHECKED BY:
Designer

REVIEWED BY:
Checker

SCALE:

BAR IS ONE INCH ON ORIGINAL DRAWING
0' 1'
IF NOT ONE INCH ON THIS SHEET, ADJUST SCALES ACCORDINGLY

SHEET

HW-S5

Project Number PRINT DATE: 6/22/2022 5:10:04 PM

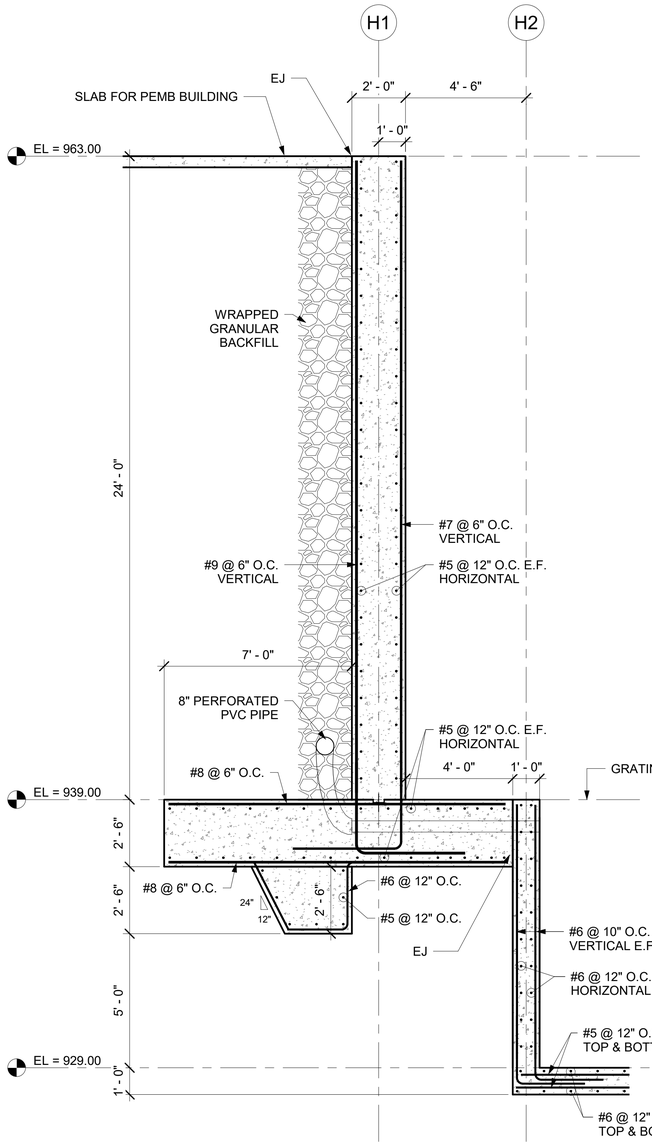

1 HEADWORKS - GRIDLINE H1 AND H2
3/8" = 1'-0"

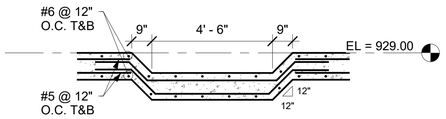

2 HEADWORKS - SECTION AT SLAB
3/8" = 1'-0"

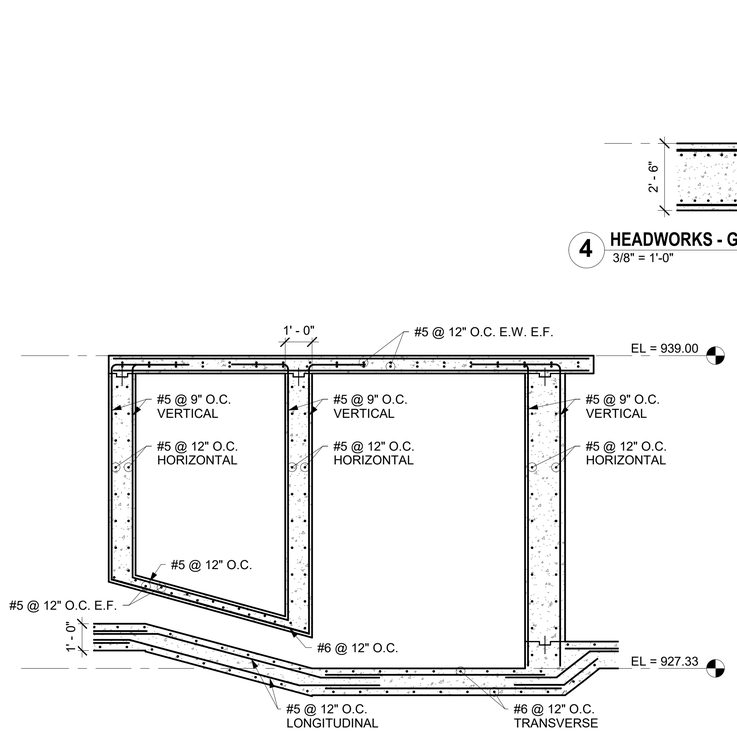

3 HEADWORKS - SECTION AT GRIT CHAMBER
3/8" = 1'-0"

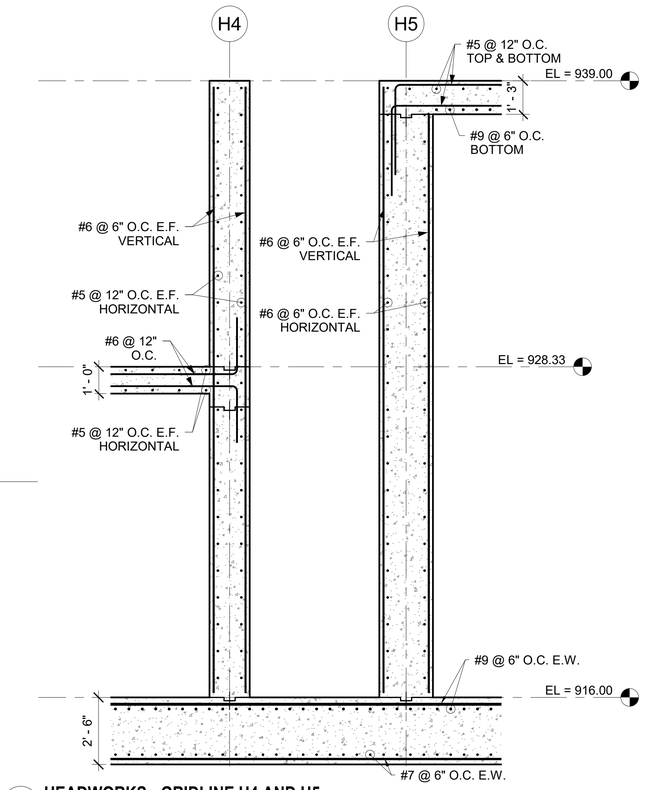

4 HEADWORKS - GRIDLINE H4 AND H5
3/8" = 1'-0"

Project Number PRINT DATE: 6/22/2022 5:10:07 PM

WALL ENGINEERING
PO BOX 1457, DURANT, OK 74702
OKLAHOMA CA #5413 EXP. JUNE 30, 2023

SUBMITTAL / REVISIONS:

DATE	BY	SUBMITTAL/REVISION

SHAWNEE MUNICIPAL AUTHORITY
WASTEWATER SYSTEM IMPROVEMENTS
SHAWNEE, OKLAHOMA

HEADWORKS WALL SECTIONS

PROJECT NO.	Project Number
DATE	Issue Date
DRAWN BY:	Author
CHECKED BY:	Designer
REVIEWED BY:	Checker
SCALE:	

BAR IS ONE INCH ON ORIGINAL DRAWING
0" 1"
IF NOT ONE INCH ON THIS SHEET, ADJUST SCALES ACCORDINGLY

SHEET

HW-S6



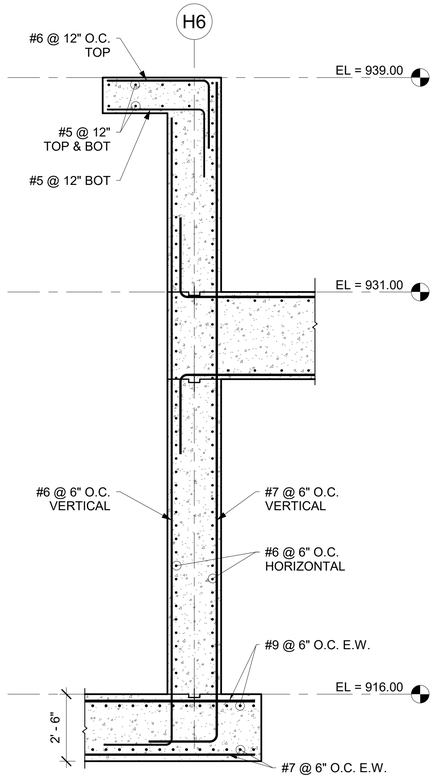

1 HEADWORKS - GRIDLINE H6
3/8" = 1'-0"

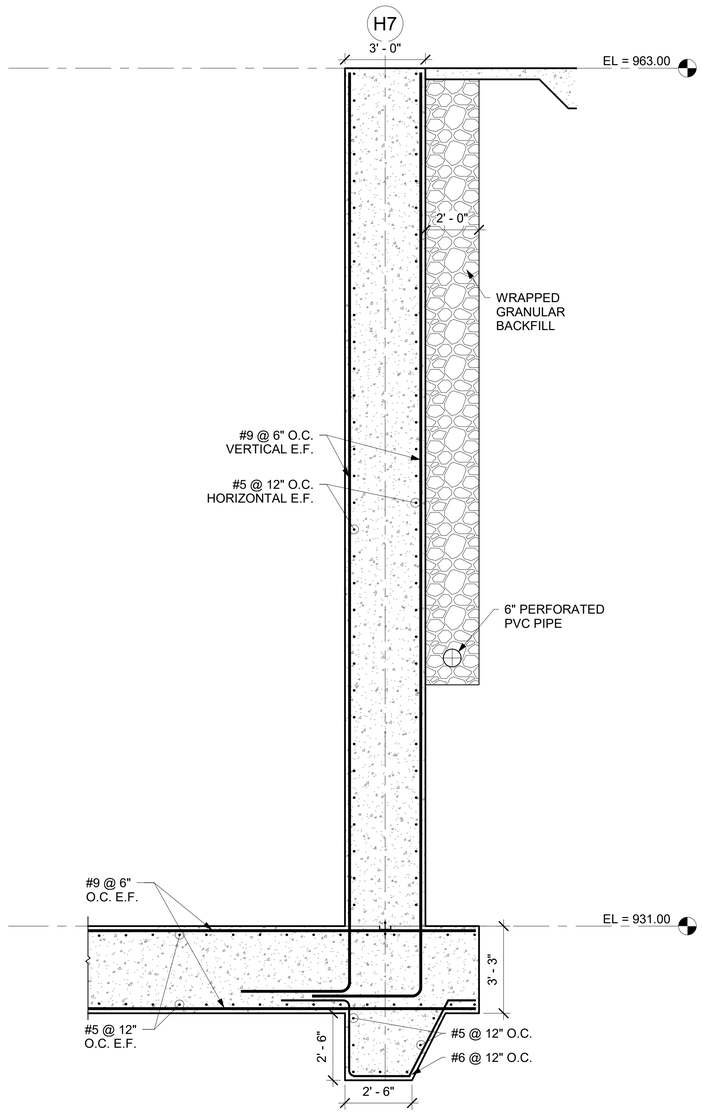

2 HEADWORKS - GRIDLINE H7
3/8" = 1'-0"

Project Number PRINT DATE: 6/22/2022 5:10:09 PM

WALL ENGINEERING
PO BOX 1457, DURANT, OK 74702
OKLAHOMA CA #5413 EXP. JUNE 30, 2023

SUBMITTAL / REVISIONS:

DATE	BY	SUBMITTAL/REVISION

SHAWNEE MUNICIPAL AUTHORITY
WASTEWATER SYSTEM IMPROVEMENTS
SHAWNEE, OKLAHOMA

HEADWORKS WALL SECTIONS

PROJECT NO.
Project Number

DATE
Issue Date

DRAWN BY:
Author

CHECKED BY:
Designer

REVIEWED BY:
Checker

SCALE:

BAR IS ONE INCH ON ORIGINAL DRAWING
0" 1"
IF NOT ONE INCH ON THIS SHEET, ADJUST SCALES ACCORDINGLY

SHEET

HW-S7



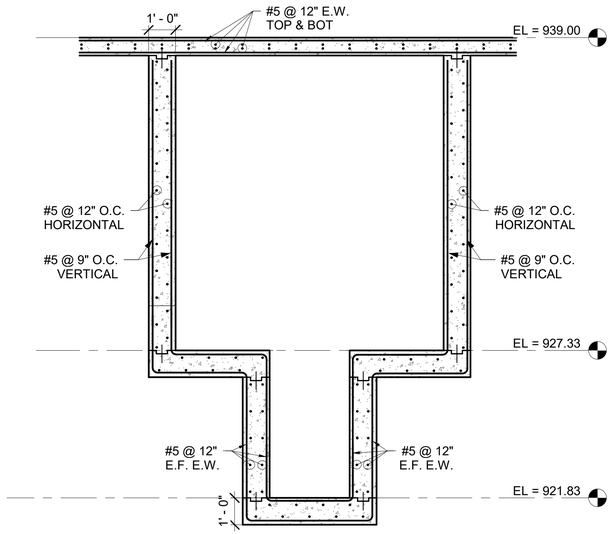

1 HEADWORKS - LONGITUDINAL SECTION 2 - Callout 1
3/8" = 1'-0"

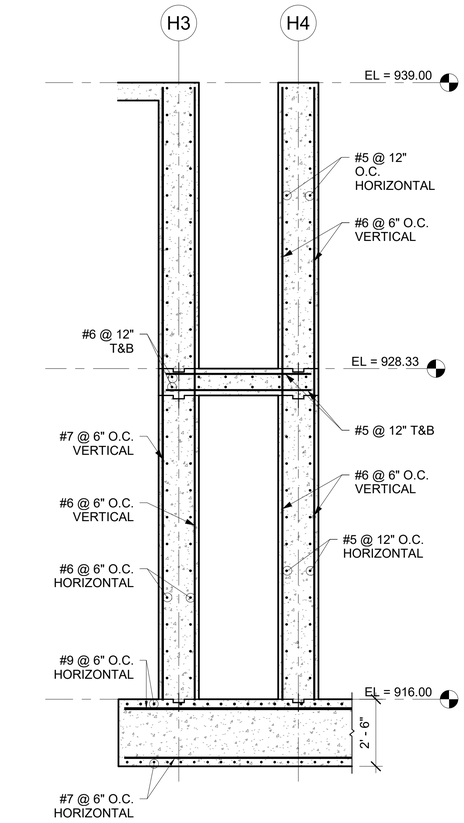

2 HEADWORKS - GRIDLINE H3 & H4-1
3/8" = 1'-0"

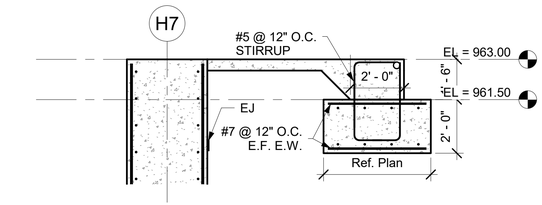

3 HEADWORKS - GRIDLINE H7-1
3/8" = 1'-0"

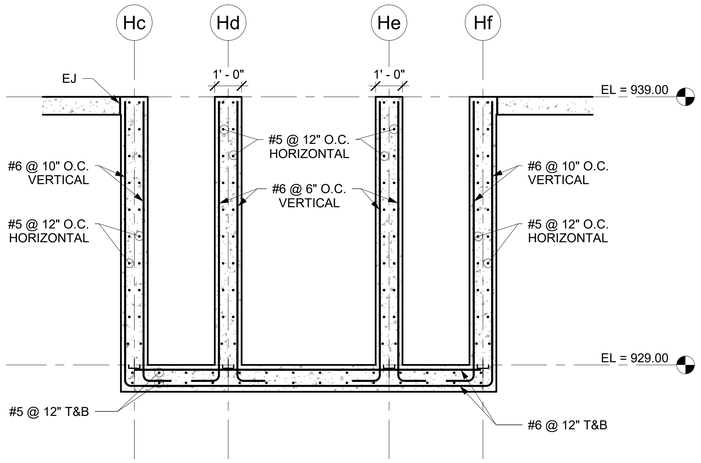

4 HEADWORKS - GRIDLINE Hc - Hf
3/8" = 1'-0"

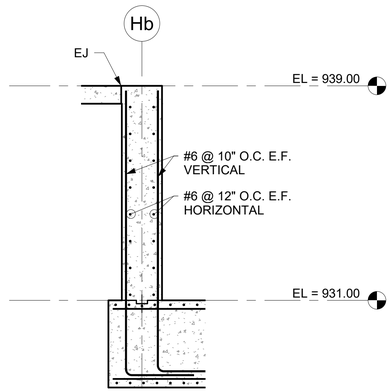

5 HEADWORKS - GRIDLINE Hb-2
3/8" = 1'-0"

WALL ENGINEERING
PO BOX 1457, DURANT, OK 74702
OKLAHOMA CA #5413 EXP. JUNE 30, 2023

SUBMITTAL / REVISIONS:
BY | DATE | SUBMITTAL/REVISION

SHAWNEE MUNICIPAL AUTHORITY
WASTEWATER SYSTEM IMPROVEMENTS
SHAWNEE, OKLAHOMA

HEADWORKS WALL SECTIONS

PROJECT NO.
Project Number
DATE
Issue Date
DRAWN BY:
Author
CHECKED BY:
Designer
REVIEWED BY:
Checker
SCALE:

BAR IS ONE INCH ON ORIGINAL DRAWING
0" 1"
IF NOT ONE INCH ON THIS SHEET, ADJUST SCALES ACCORDINGLY

SHEET
HW-S8



Project Number PRINT DATE: 6/22/2022 5:10:12 PM

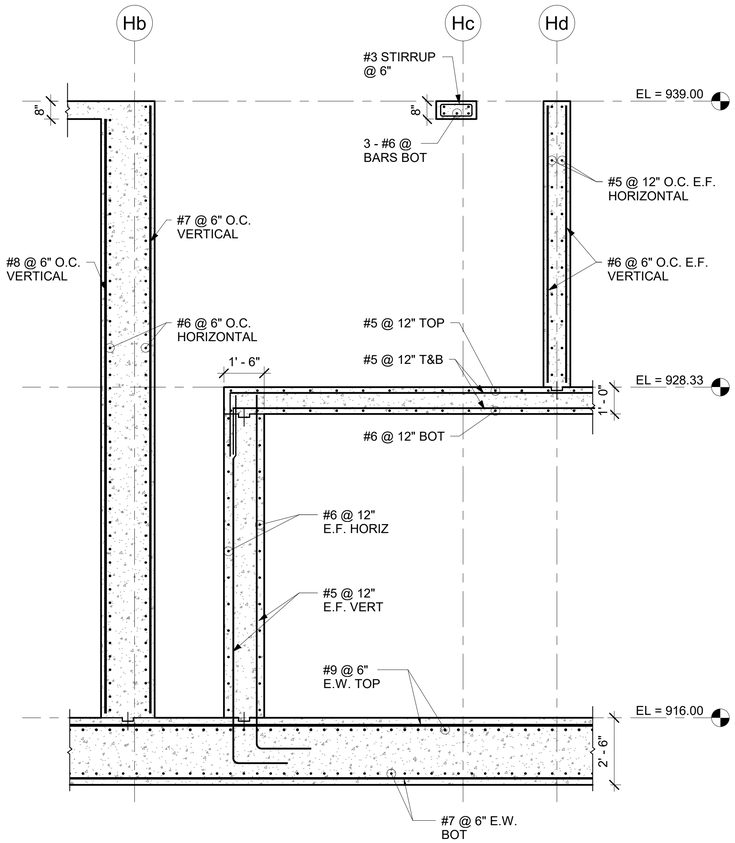

1 HEADWORKS - GRIDLINE Hb TO Hd
3/8" = 1'-0"

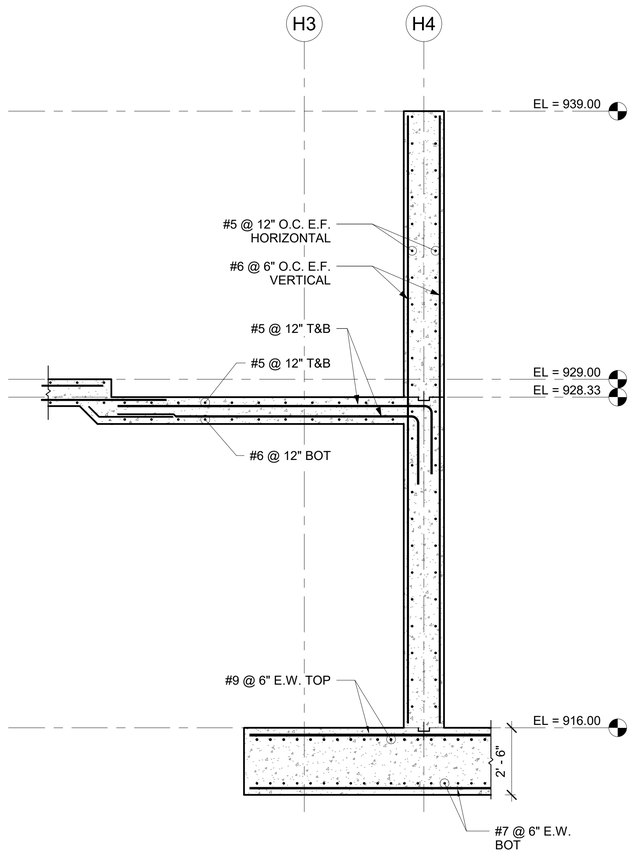

2 HEADWORKS - GRIDLINE H3 & H4
3/8" = 1'-0"

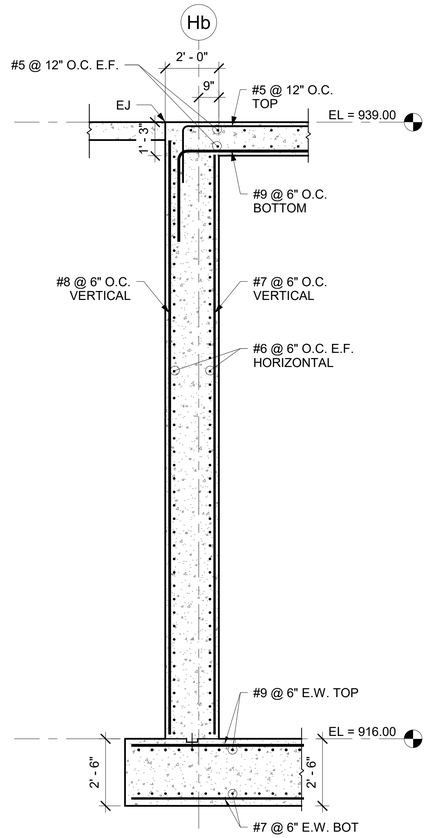

3 HEADWORKS - GRIDLINE Hb FROM H3 TO H6
3/8" = 1'-0"

Project Number PRINT DATE: 6/22/2022 5:10:14 PM

WALL ENGINEERING
PO BOX 1457, DURANT, OK 74702
OKLAHOMA CA #5413 EXP. JUNE 30, 2023

SUBMITTAL / REVISIONS:

DATE	BY	SUBMITTAL/REVISION

SHAWNEE MUNICIPAL AUTHORITY
WASTEWATER SYSTEM IMPROVEMENTS
SHAWNEE, OKLAHOMA

HEADWORKS WALL SECTIONS

PROJECT NO.
Project Number

DATE
Issue Date

DRAWN BY:
Author

CHECKED BY:
Designer

REVIEWED BY:
Checker

SCALE:

BAR IS ONE INCH ON ORIGINAL DRAWING
0' 1'
IF NOT ONE INCH ON THIS SHEET, ADJUST SCALES ACCORDINGLY

SHEET

HW-S9

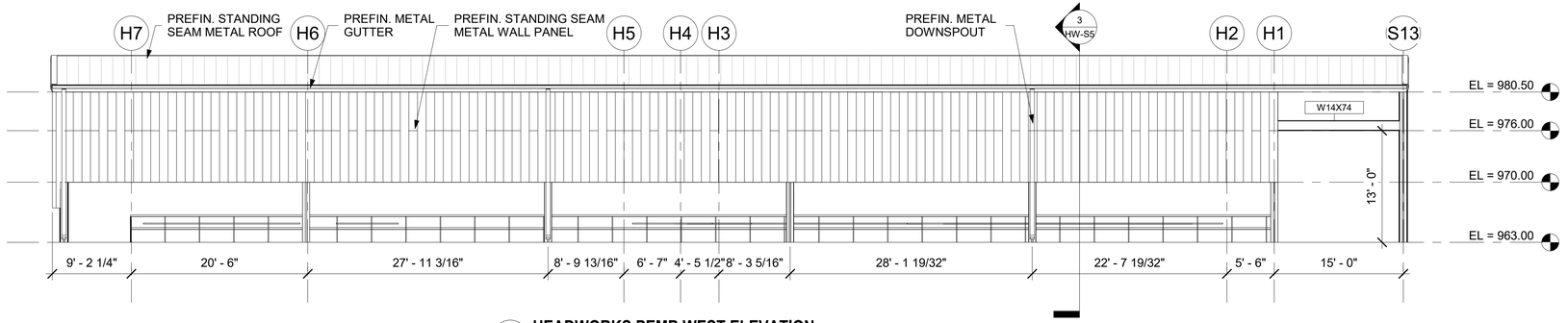

1 HEADWORKS PEMB WEST ELEVATION
1/8" = 1'-0"

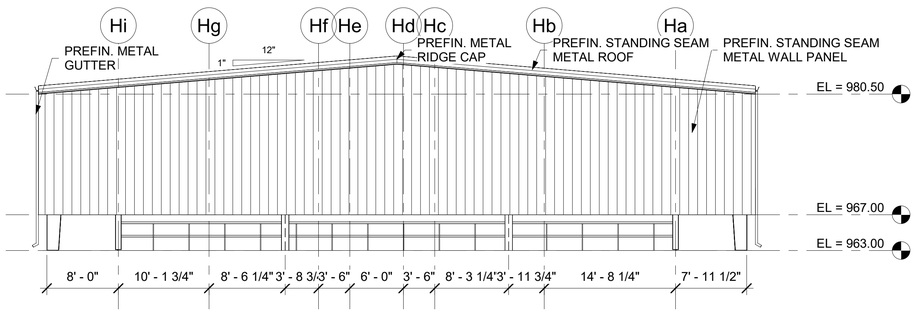

2 HEADWORKS PEMB NORTH ELEVATION
1/8" = 1'-0"

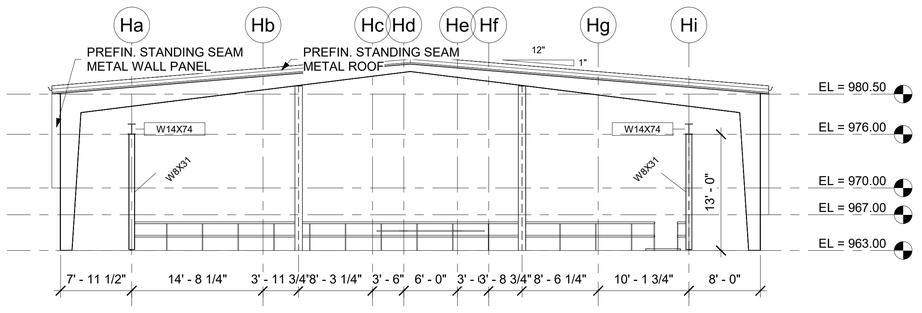

4 HEADWORKS PEMB SOUTH ELEVATION
1/8" = 1'-0"

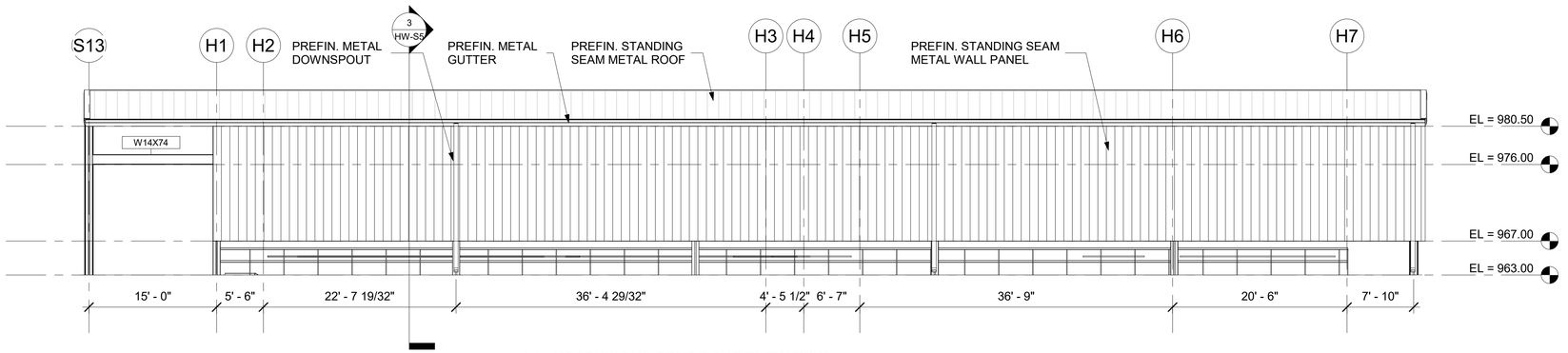

3 HEADWORKS PEMB EAST ELEVATION
1/8" = 1'-0"

WALL ENGINEERING
PO BOX 1457, DURANT, OK 74702
OKLAHOMA CA #5413 EXP. JUNE 30, 2023

SUBMITTAL / REVISIONS:		
DATE	BY	SUBMITTAL/REVISION

SHAWNEE MUNICIPAL AUTHORITY
WASTEWATER SYSTEM IMPROVEMENTS
SHAWNEE, OKLAHOMA

HEADWORKS ELEVATIONS

PROJECT NO.	Project Number
DATE	Issue Date
DRAWN BY:	Author
CHECKED BY:	Designer
REVIEWED BY:	Checker
SCALE:	

BAR IS ONE INCH ON ORIGINAL DRAWING
0" 1"
IF NOT ONE INCH ON THIS SHEET, ADJUST SCALES ACCORDINGLY

SHEET

HW-S10

REGISTERED PROFESSIONAL ENGINEER
Stacy Lee Wall
18558
OKLAHOMA

Project Number PRINT DATE: 6/22/2022 5:10:15 PM

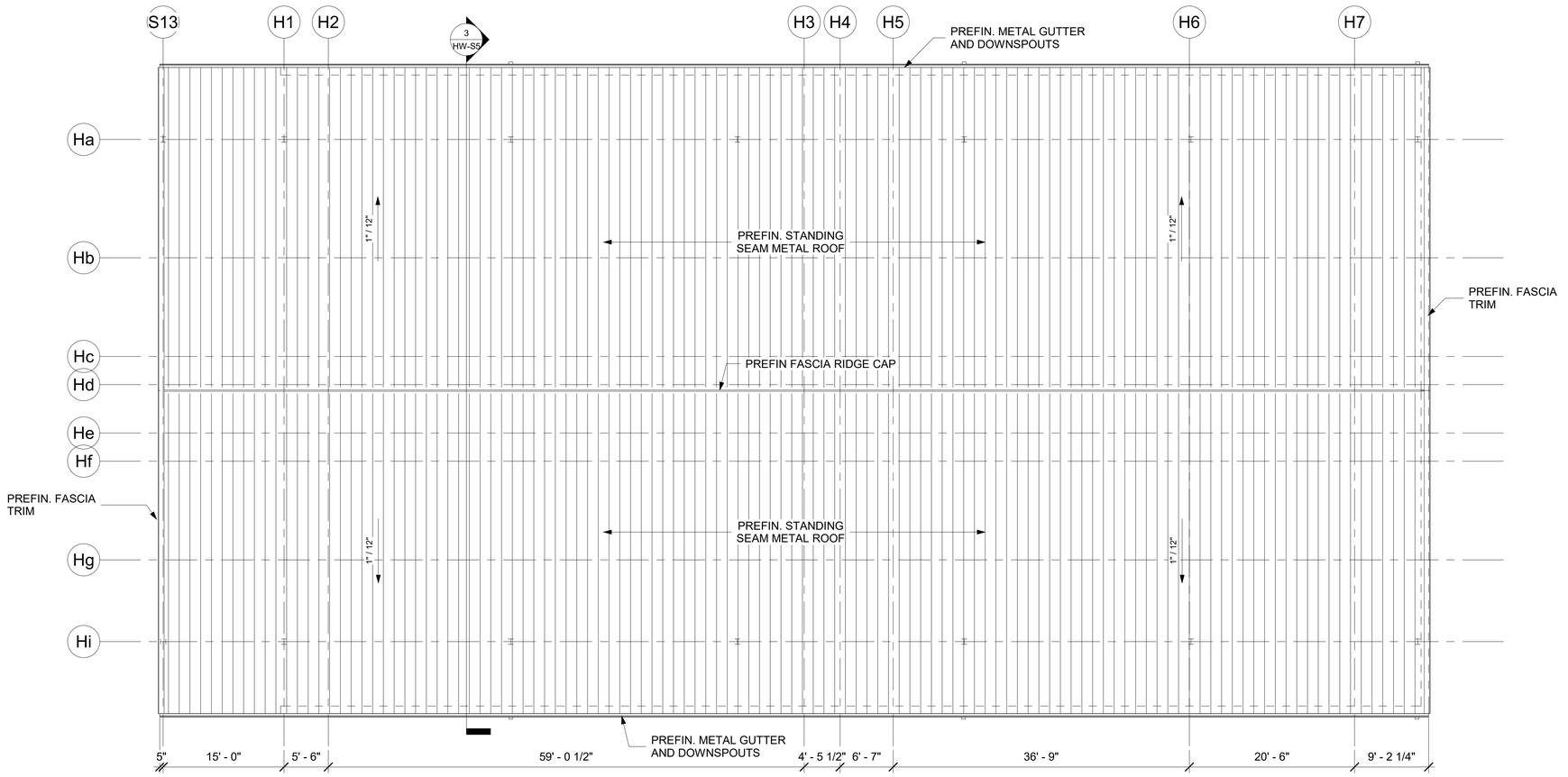

1 HEADWORKS PEMB ROOF PLAN
1/8" = 1'-0"

WALL ENGINEERING
PO BOX 1457, DURANT, OK 74702
OKLAHOMA CA #5413 EXP. JUNE 30, 2023

SUBMITTAL / REVISIONS:
BY
DATE
SUBMITTAL/REVISION

SHAWNEE MUNICIPAL AUTHORITY
WASTEWATER SYSTEM IMPROVEMENTS
SHAWNEE, OKLAHOMA

HEADWORKS ROOF PLAN

PROJECT NO.
Project Number

DATE
Issue Date

DRAWN BY:
Author

CHECKED BY:
Designer

REVIEWED BY:
Checker

SCALE:

BAR IS ONE INCH ON ORIGINAL DRAWING
0" 1"
IF NOT ONE INCH ON THIS SHEET, ADJUST SCALES ACCORDINGLY

SHEET

HW-S11

REGISTERED PROFESSIONAL ENGINEER
Stacy Wall
13558
OKLAHOMA

Project Number PRINT DATE: 6/22/2022 5:10:15 PM

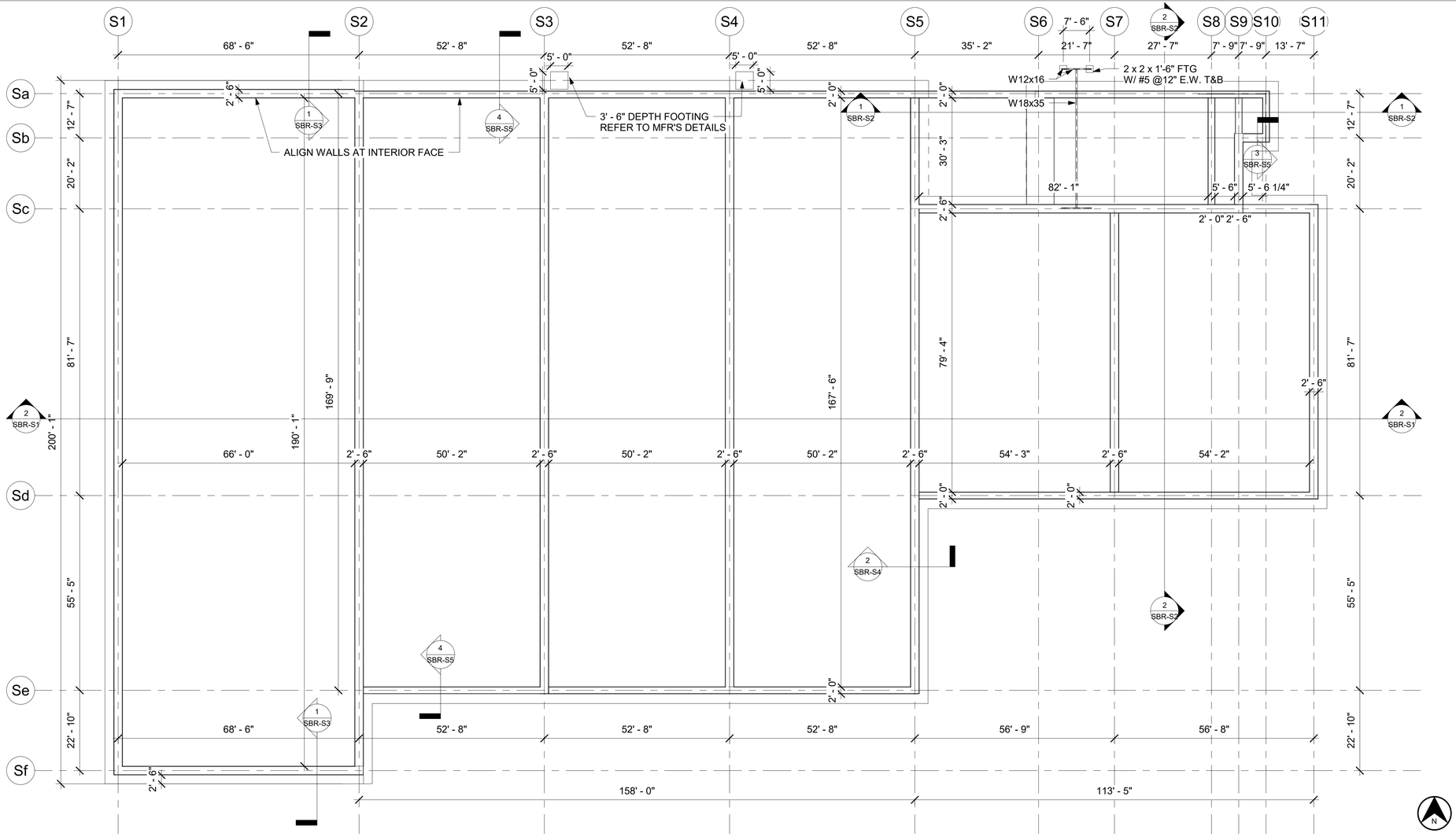

1 SBR PLAN
1/16" = 1'-0"

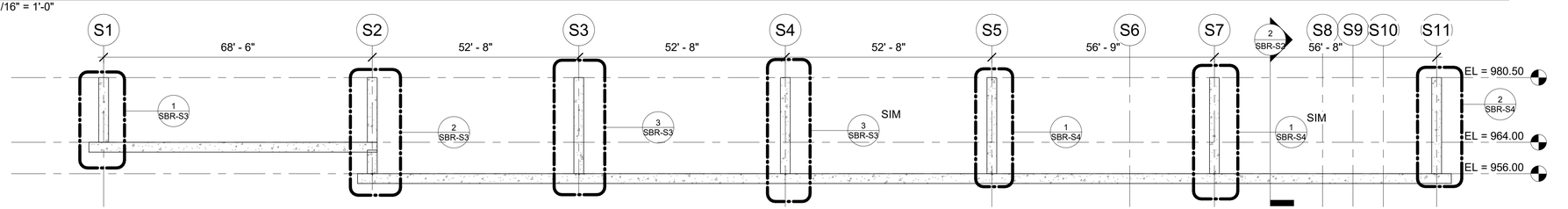

2 SBR-LONGITUDINAL SECTION
1/16" = 1'-0"

WALL ENGINEERING
PO BOX 1457, DURANT OK 74702
OKLAHOMA CA #5413 EXP. JUNE 30, 2023

SUBMITTAL / REVISIONS:

BY	DATE	SUBMITTAL/REVISION

SHAWNEE MUNICIPAL AUTHORITY
WASTEWATER SYSTEM IMPROVEMENTS
SHAWNEE, OKLAHOMA

SEQUENCING BATCH REACTOR FLOOR PLAN

PROJECT NO.	Project Number
DATE	Issue Date
DRAWN BY:	Author
CHECKED BY:	ARCHITECTURAL
REVIEWED BY:	Checker
SCALE:	

BAR IS ONE INCH ON ORIGINAL DRAWING
0" 1"
IF NOT ONE INCH ON THIS SHEET, ADJUST SCALES ACCORDINGLY

SHEET

SBR-S1

Project Number PRINT DATE: 6/22/2022 5:10:18 PM

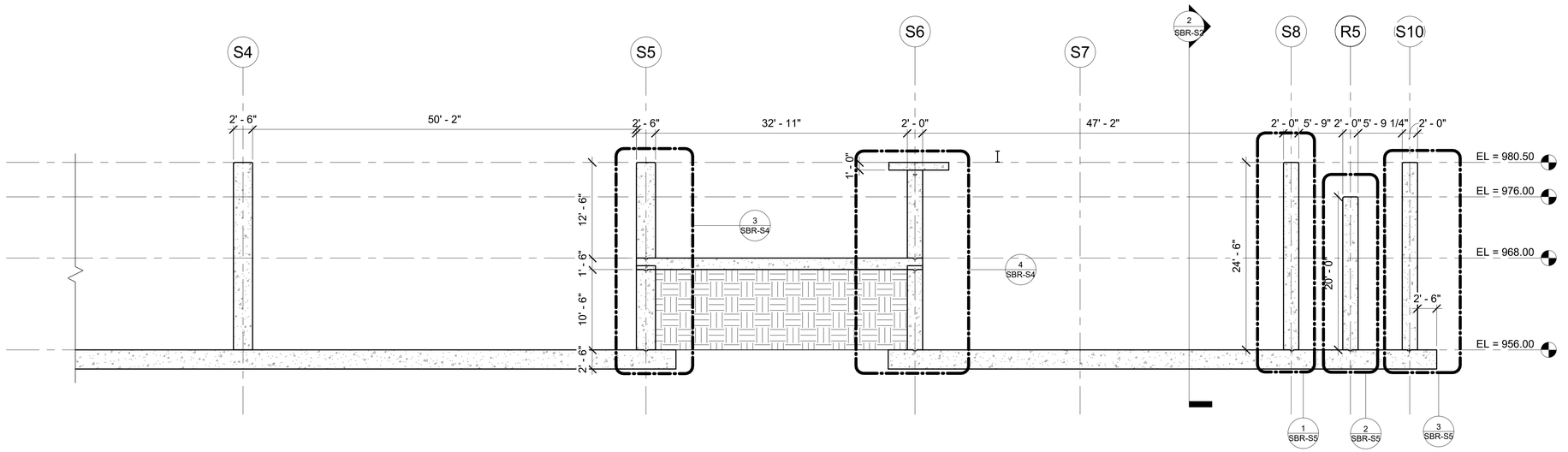

1 SBR-PARTIAL LONGITUDINAL SECTION
1/8" = 1'-0"

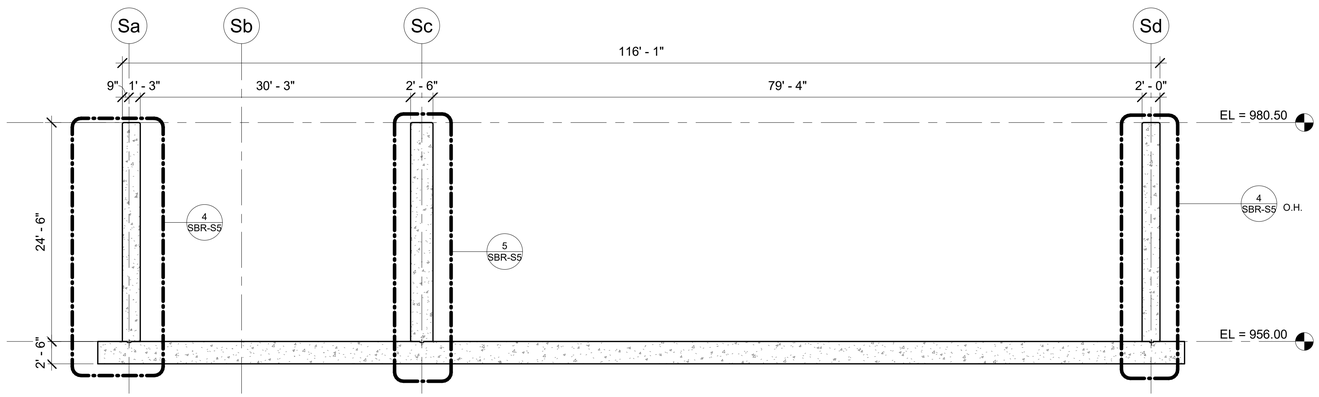

2 SBR-TRANSVERSE SECTION
1/8" = 1'-0"

Project Number PRINT DATE: 6/22/2022 5:10:19 PM

WALL ENGINEERING
PO BOX 1457, DURANT, OK 74702
OKLAHOMA CA #5413 EXP. JUNE 30, 2023

SUBMITTAL / REVISIONS:

DATE	BY	SUBMITTAL/REVISION

SHAWNEE MUNICIPAL AUTHORITY
WASTEWATER SYSTEM IMPROVEMENTS
SHAWNEE, OKLAHOMA

SEQUENCING BATCH REACTOR SECTIONS

PROJECT NO.
Project Number

DATE
Issue Date

DRAWN BY:
Author

CHECKED BY:
ARCHITECTURAL

REVIEWED BY:
Checker

SCALE:

BAR IS ONE INCH ON ORIGINAL DRAWING
0' 1'
IF NOT ONE INCH ON THIS SHEET, ADJUST SCALES ACCORDINGLY

SHEET

SBR-S2

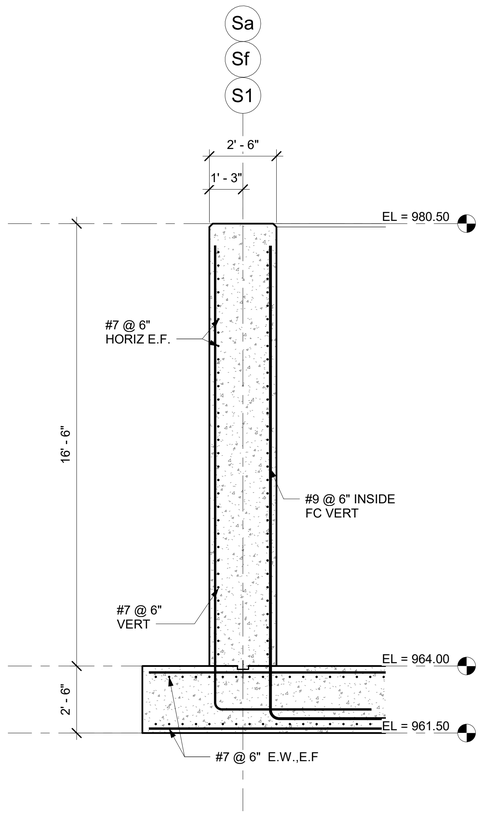

1 **SBR-GRIDLINE S1**
3/8" = 1'-0"

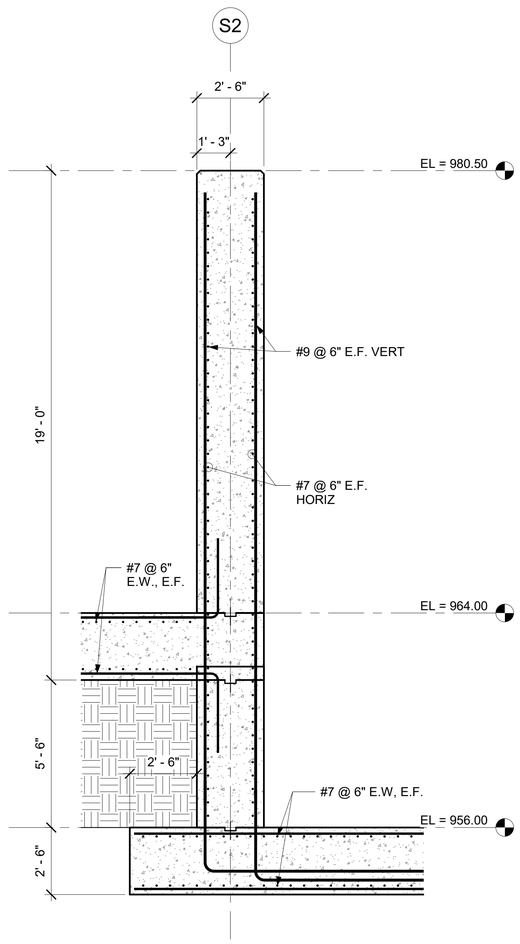

2 **SBR-GRIDLINE S2**
3/8" = 1'-0"

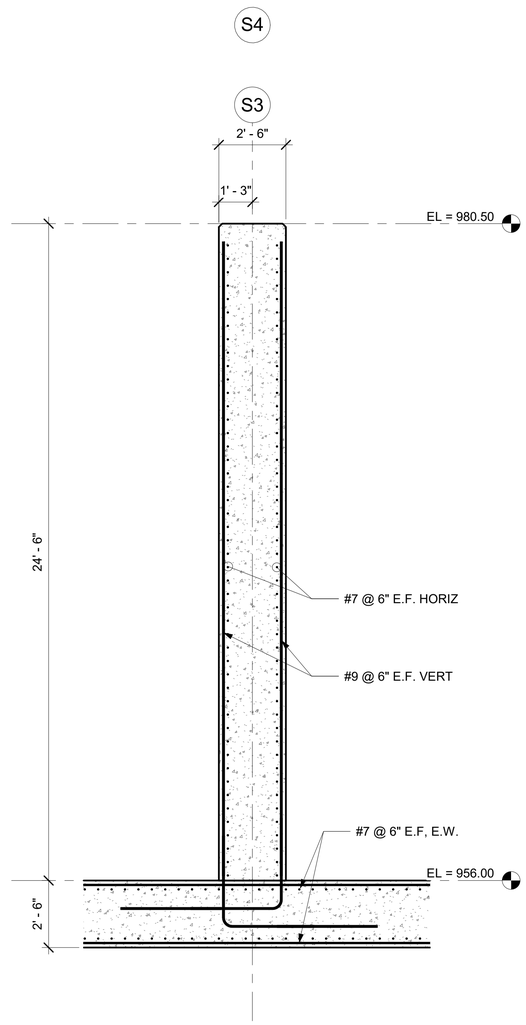

3 **SBR-GRIDLINE S3 & S4**
3/8" = 1'-0"

WALL ENGINEERING
PO BOX 1457, DURANT, OK 74702
OKLAHOMA CA #5413 EXP. JUNE 30, 2023

SUBMITTAL / REVISIONS:

DATE	BY	SUBMITTAL/REVISION

SHAWNEE MUNICIPAL AUTHORITY
WASTEWATER SYSTEM IMPROVEMENTS
SHAWNEE, OKLAHOMA

SEQUENCING BATCH REACTOR WALL SECTIONS

PROJECT NO.	Project Number
DATE	Issue Date
DRAWN BY:	Author
CHECKED BY:	ARCHITECTURAL
REVIEWED BY:	Checker
SCALE:	

BAR IS ONE INCH ON ORIGINAL DRAWING
0" 1"
IF NOT ONE INCH ON THIS SHEET, ADJUST SCALES ACCORDINGLY

SHEET

SBR-S3



Project Number PRINT DATE: 6/22/2022 5:10:21 PM

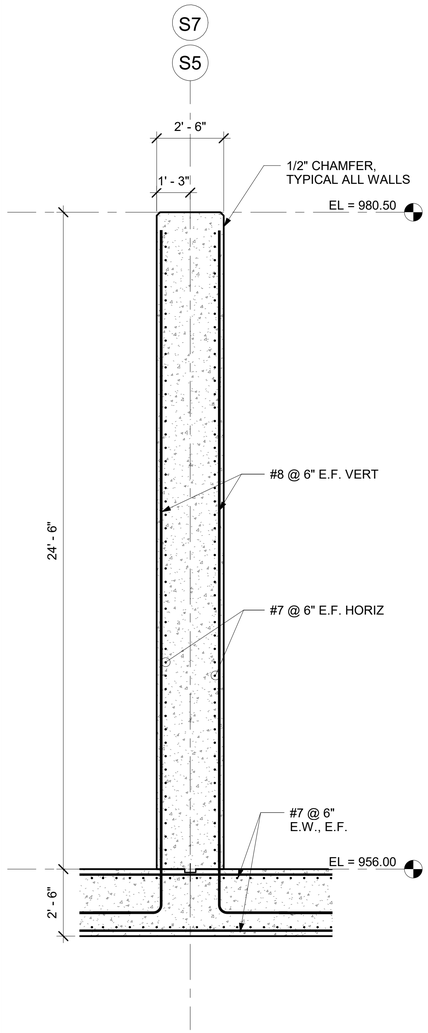

1 **SBR-GRIDLINE S5 & S7**
3/8" = 1'-0"

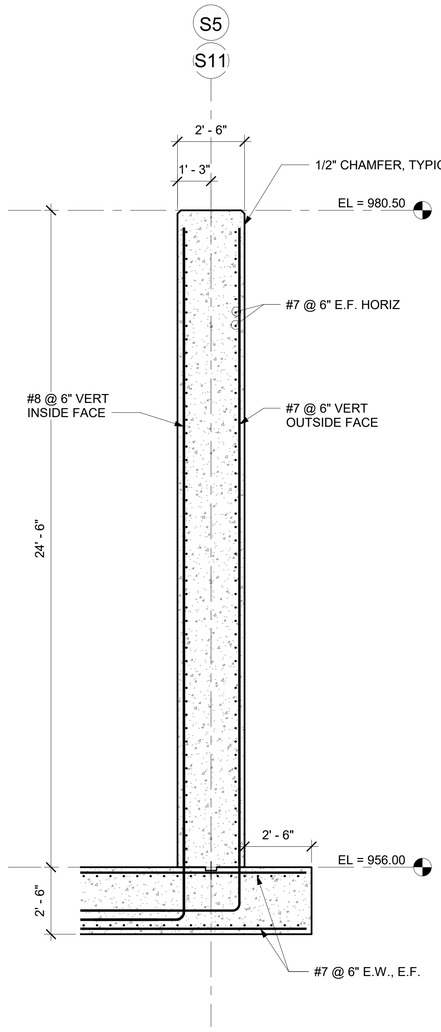

2 **SBR-GRIDLINE S11 &S5**
3/8" = 1'-0"

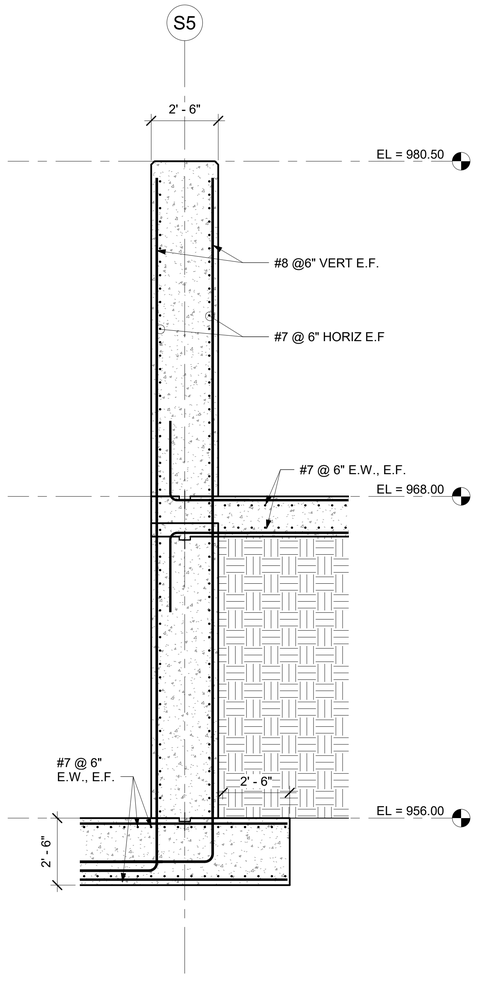

3 **SBR-GRIDLINE S5 -**
3/8" = 1'-0"

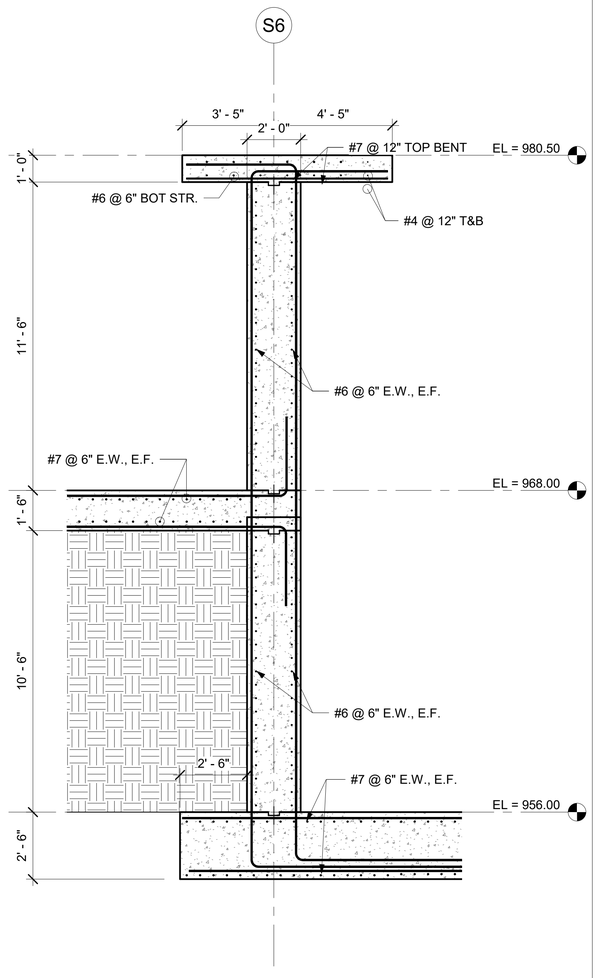

4 **SBR-GRIDLINE S6 -**
3/8" = 1'-0"

WALL ENGINEERING
PO BOX 1457, DURANT, OK 74702
OKLAHOMA CA #5413 EXP. JUNE 30, 2023

SUBMITTAL / REVISIONS:
BY | DATE | SUBMITTAL/REVISION

SHAWNEE MUNICIPAL AUTHORITY
WASTEWATER SYSTEM IMPROVEMENTS
SHAWNEE, OKLAHOMA

SEQUENCING BATCH REACTOR WALL SECTIONS

PROJECT NO.
Project Number

DATE
Issue Date

DRAWN BY:
Author

CHECKED BY:
ARCHITECTURAL

REVIEWED BY:
Checker

SCALE:

BAR IS ONE INCH ON ORIGINAL DRAWING
0" 1"
IF NOT ONE INCH ON THIS SHEET, ADJUST SCALES ACCORDINGLY

SHEET

SBR-S4

REGISTERED PROFESSIONAL ENGINEER
Stacy A. Long
19658
OKLAHOMA

Project Number PRINT DATE: 6/22/2022 5:10:23 PM

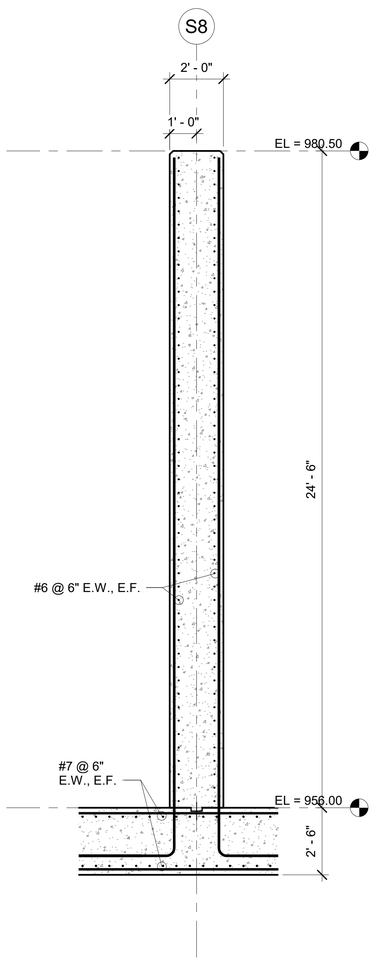

1 SBR-GRIDLINE S8
3/8" = 1'-0"

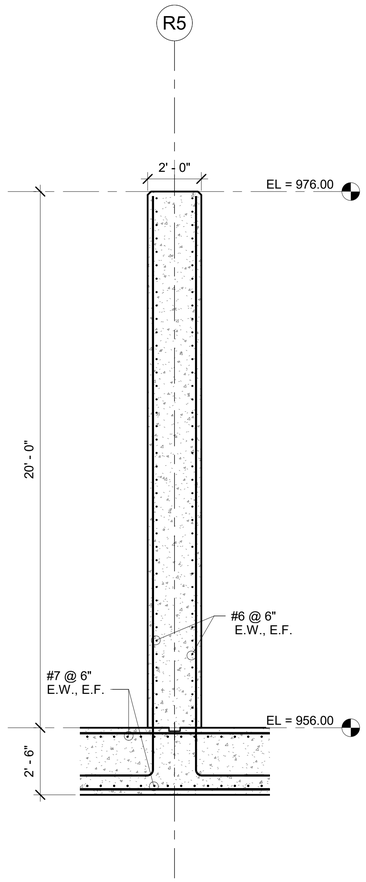

2 SBR-GRIDLINE S9
3/8" = 1'-0"

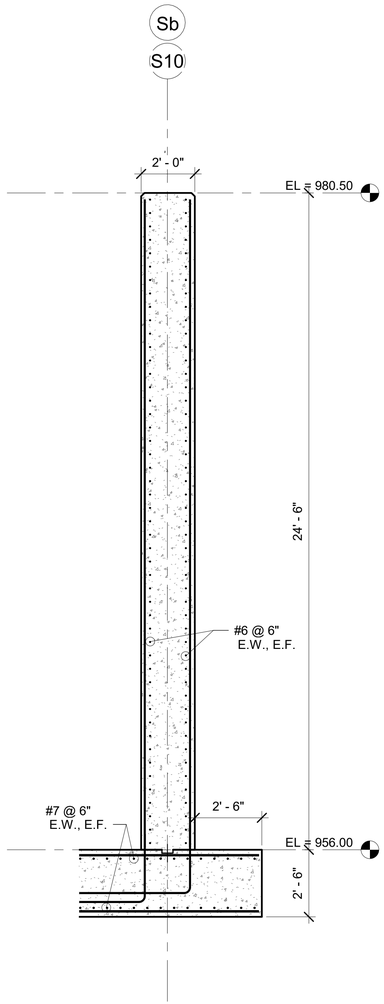

3 SBR-GRIDLINE S10 & Sb
3/8" = 1'-0"

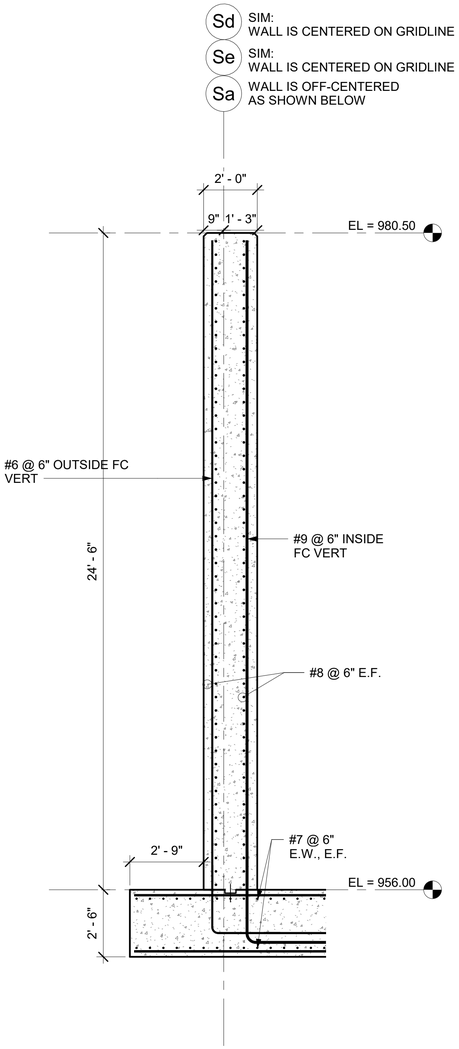

4 SBR-GRIDLINE Sa & Sd (O.H.)
3/8" = 1'-0"

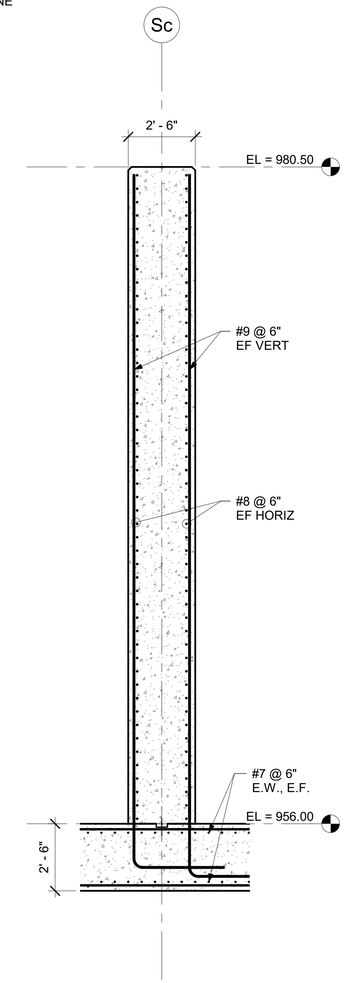

5 SBR-GRIDLINE Sc
3/8" = 1'-0"

WALL ENGINEERING
PO BOX 1457, DURANT, OK 74702
OKLAHOMA CA #5413 EXP. JUNE 30, 2023

SUBMITTAL / REVISIONS:

DATE	BY	SUBMITTAL/REVISION

SHAWNEE MUNICIPAL AUTHORITY
WASTEWATER SYSTEM IMPROVEMENTS
SHAWNEE, OKLAHOMA

SEQUENCING BATCH REACTOR WALL SECTIONS

PROJECT NO.
Project Number

DATE
Issue Date

DRAWN BY:
Author

CHECKED BY:
ARCHITECTURAL

REVIEWED BY:
Checker

SCALE:

BAR IS ONE INCH ON ORIGINAL DRAWING
0" 1"
IF NOT ONE INCH ON THIS SHEET, ADJUST SCALES ACCORDINGLY

SHEET

SBR-S5

REGISTERED PROFESSIONAL ENGINEER
Stacy A. Loyd
16558
OKLAHOMA

Project Number PRINT DATE: 6/22/2022 5:10:25 PM

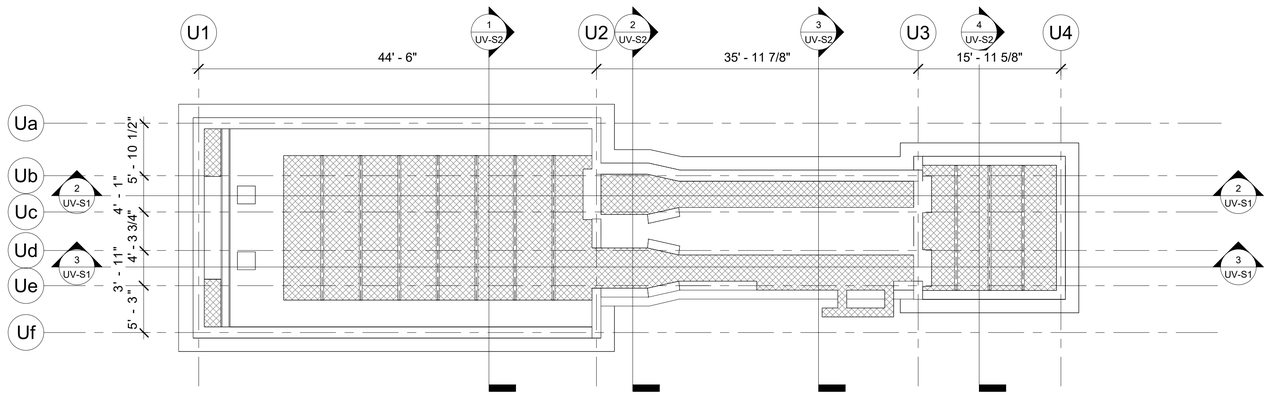

1 UV DISINFECTION PLAN
1/8" = 1'-0"

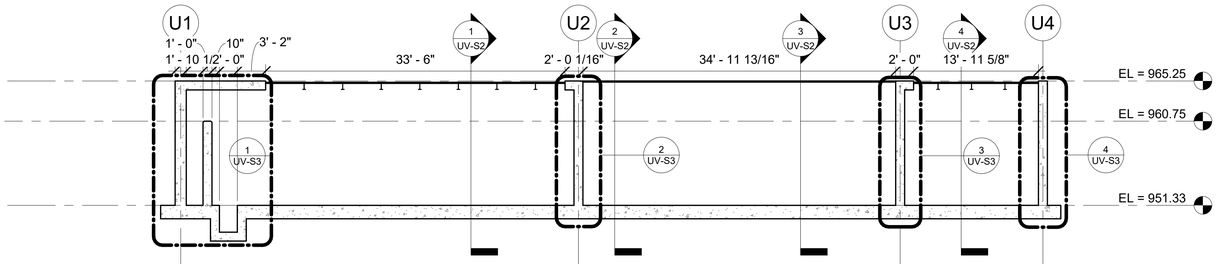

2 UV - LONGITUDINAL SECTION
1/8" = 1'-0"

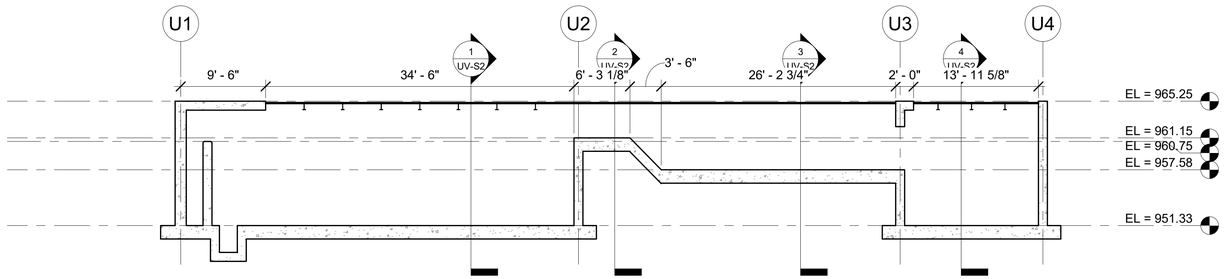

3 UV - LONGITUDINAL SECTION 2
1/8" = 1'-0"

WALL ENGINEERING
PO BOX 1457, DURANT OK 74702
OKLAHOMA CA #5413 EXP. JUNE 30, 2023

SUBMITTAL / REVISIONS:
DATE | BY | SUBMITTAL/REVISION

SHAWNEE MUNICIPAL AUTHORITY
WASTEWATER SYSTEM IMPROVEMENTS
SHAWNEE, OKLAHOMA

UV DISINFECTION PLAN AND SECTION

PROJECT NO.
Project Number

DATE
Issue Date

DRAWN BY:
Author

CHECKED BY:
Designer

REVIEWED BY:
Checker

SCALE:

BAR IS ONE INCH ON ORIGINAL DRAWING
0" 1"
IF NOT ONE INCH ON THIS SHEET, ADJUST SCALES ACCORDINGLY

SHEET

UV-S1



Project Number PRINT DATE: 6/22/2022 5:10:27 PM

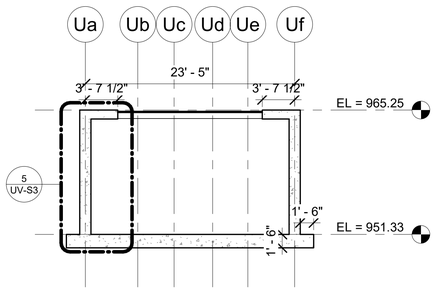

1 UV - TRANSVERSE SECTION 2
1/8" = 1'-0"

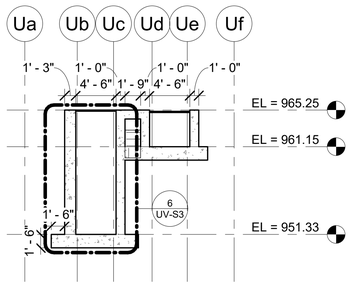

2 UV - TRANSVERSE SECTION 3
1/8" = 1'-0"

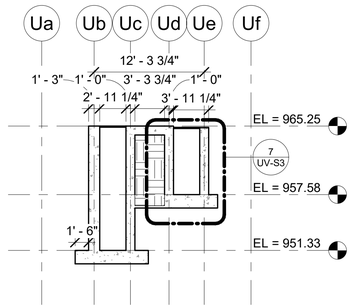

3 UV - TRANSVERSE SECTION
1/8" = 1'-0"

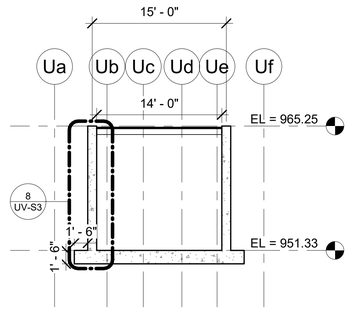

4 UV - TRANSVERSE SECTION 4
1/8" = 1'-0"



Project Number PRINT DATE: 6/22/2022 5:10:28 PM

WALL ENGINEERING
PO BOX 1457, DURANT, OK 74702
OKLAHOMA CA #5413 EXP. JUNE 30, 2023

SUBMITTAL / REVISIONS:
DATE | BY | SUBMITTAL/REVISION

SHAWNEE MUNICIPAL AUTHORITY
WASTEWATER SYSTEM IMPROVEMENTS
SHAWNEE, OKLAHOMA

UV DISINFECTION TRANSVERSE SECTIONS

PROJECT NO.
Project Number

DATE
Issue Date

DRAWN BY:
Author

CHECKED BY:
Designer

REVIEWED BY:
Checker

SCALE:

BAR IS ONE INCH ON ORIGINAL DRAWING
0" 1"
IF NOT ONE INCH ON THIS SHEET, ADJUST SCALES ACCORDINGLY

SHEET

UV-S2

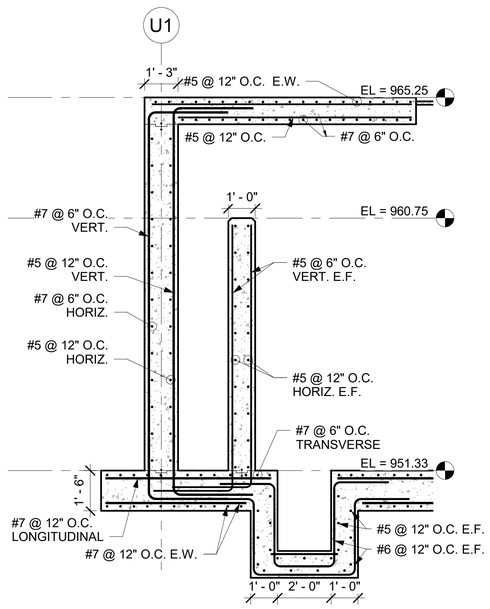

1 UV - GRIDLINE U1
3/8" = 1'-0"

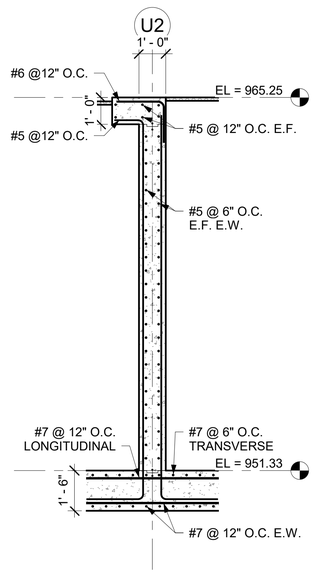

2 UV - GRIDLINE U2
3/8" = 1'-0"

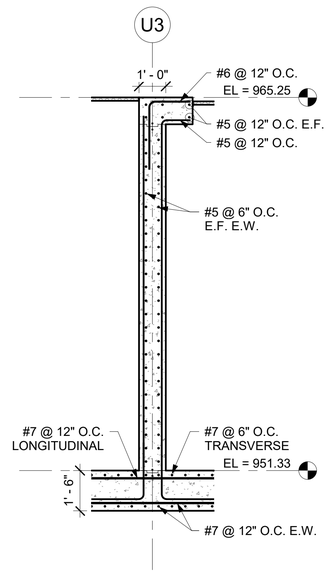

3 UV - GRIDLINE U3
3/8" = 1'-0"

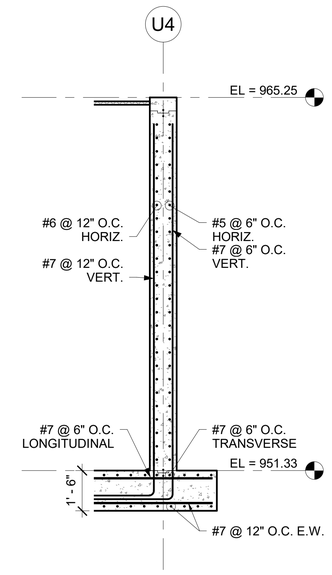

4 UV - GRIDLINE U4
3/8" = 1'-0"

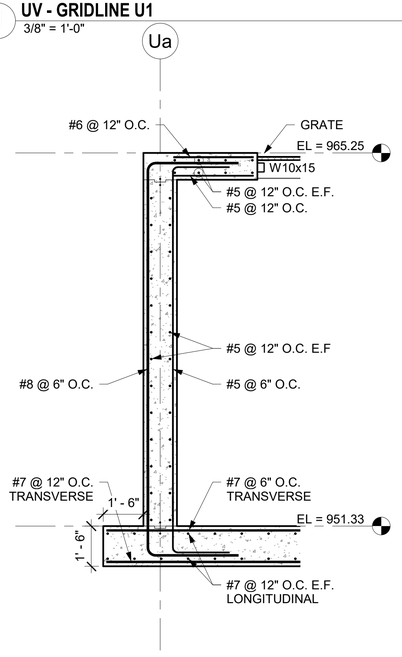

5 UV - GRIDLINE Ua
3/8" = 1'-0"

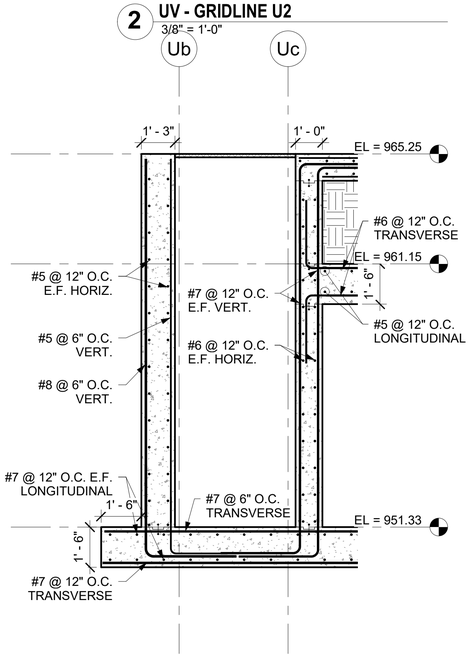

6 UV - GRIDLINE Ub & Uc
3/8" = 1'-0"

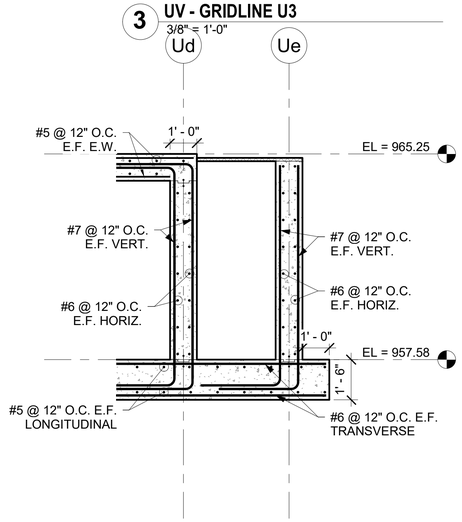

7 UV - GRIDLINE Ud & Ue
3/8" = 1'-0"

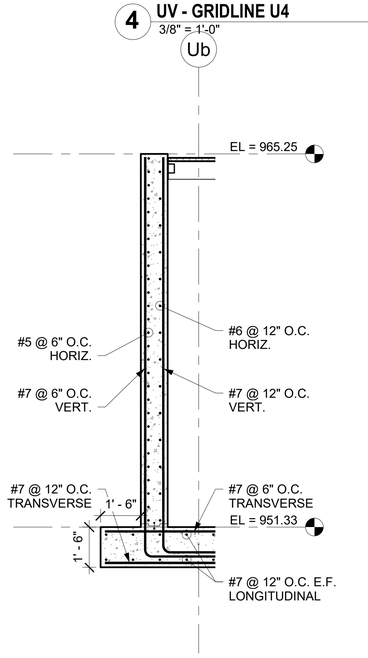

8 UV - GRIDLINE Ub
3/8" = 1'-0"

WALL ENGINEERING
PO BOX 1457, DURANT, OK 74702
OKLAHOMA CA #5413 EXP. JUNE 30, 2023

SUBMITTAL / REVISIONS:	
DATE	BY
	SUBMITTAL/REVISION

SHAWNEE MUNICIPAL AUTHORITY
WASTEWATER SYSTEM IMPROVEMENTS
SHAWNEE, OKLAHOMA

UV DISINFECTION WALL SECTIONS

PROJECT NO. Project Number
DATE Issue Date
DRAWN BY: Author
CHECKED BY: Designer
REVIEWED BY: Checker
SCALE:

BAR IS ONE INCH ON ORIGINAL DRAWING
0" 1"
IF NOT ONE INCH ON THIS SHEET, ADJUST SCALES ACCORDINGLY

SHEET

UV-S3



Project Number PRINT DATE: 6/22/2022 5:10:30 PM

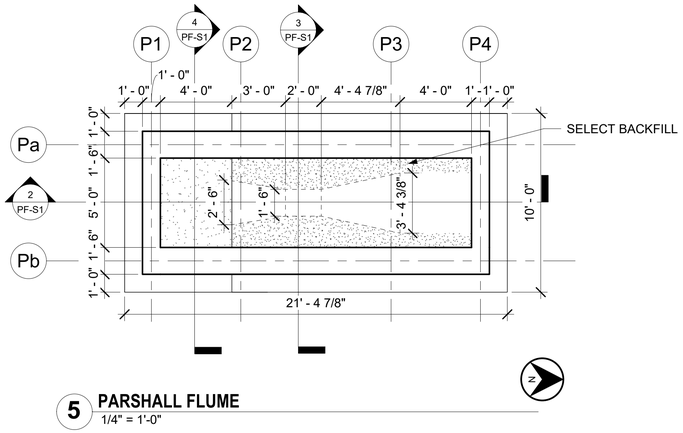

5 PARSHALL FLUME

1/4" = 1'-0"

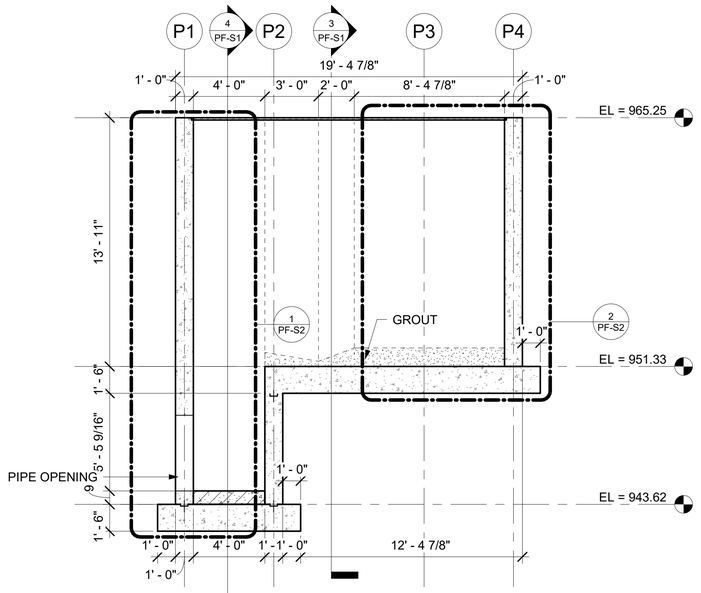

2 PF - LONGITUDINAL SECTION

1/4" = 1'-0"

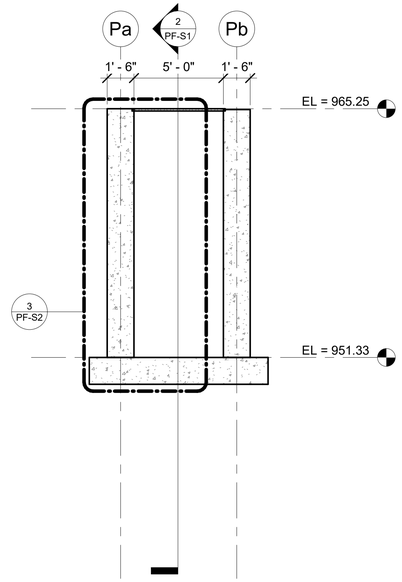

3 PF - TRANSVERSE SECTION

1/4" = 1'-0"

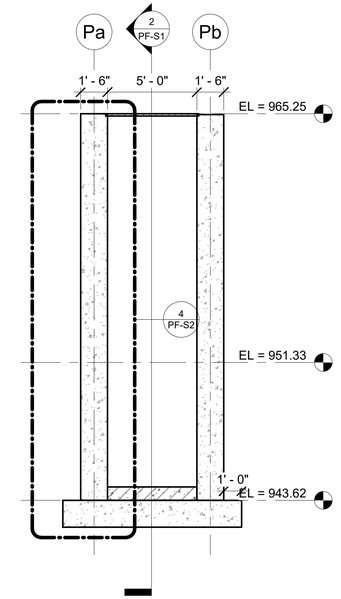

4 PF - TRANSVERSE SECTION 2

1/4" = 1'-0"



WALL ENGINEERING

PO BOX 1457, DURANT, OK 74702
OKLAHOMA CA #5413 EXP. JUNE 30, 2023

SUBMITTAL / REVISIONS:

BY	DATE	SUBMITTAL/REVISION

SHAWNEE MUNICIPAL AUTHORITY
WASTEWATER SYSTEM IMPROVEMENTS
SHAWNEE, OKLAHOMA

PARSHALL FLUME FLOOR PLAN

PROJECT NO.
Project Number

DATE
Issue Date

DRAWN BY:
Author

CHECKED BY:
Designer

REVIEWED BY:
Checker

SCALE:

BAR IS ONE INCH ON ORIGINAL DRAWING
0' 1'
IF NOT ONE INCH ON THIS SHEET, ADJUST SCALES ACCORDINGLY

SHEET

PF-S1

Project Number PRINT DATE: 6/22/2022 5:10:16 PM

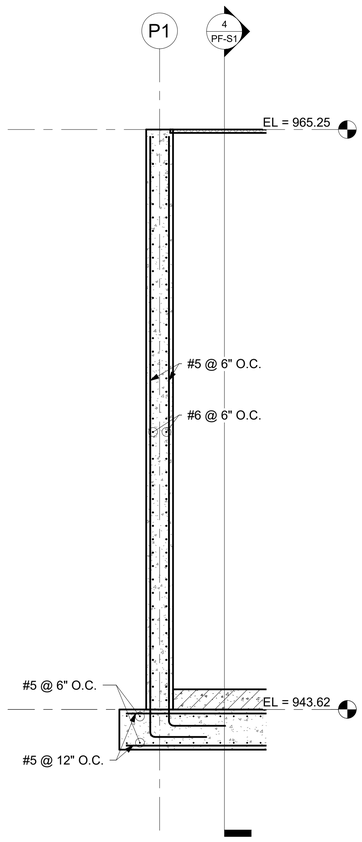

1 **PF - BETWEEN GRIDLINE P1 & P2**
3/8" = 1'-0"

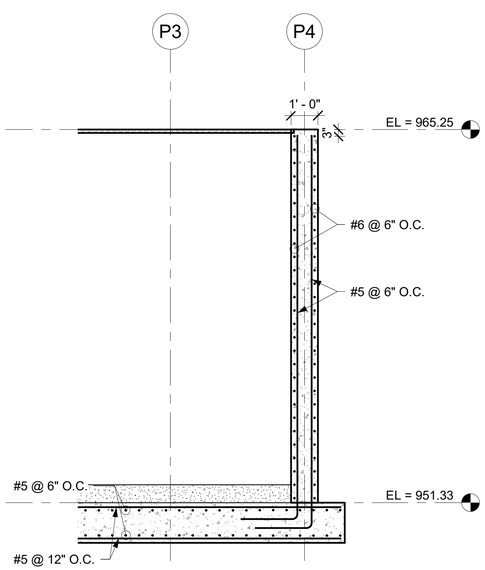

2 **PF - BETWEEN GRIDLINE P3 & P4**
3/8" = 1'-0"

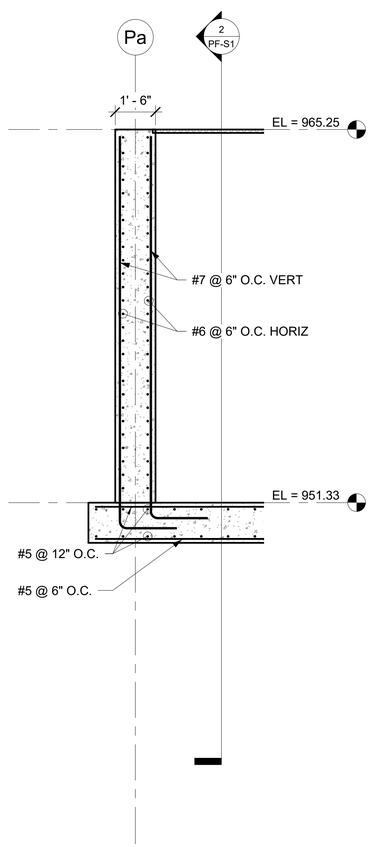

3 **PF - BETWEEN GRIDELINE Pa & Pb**
3/8" = 1'-0"

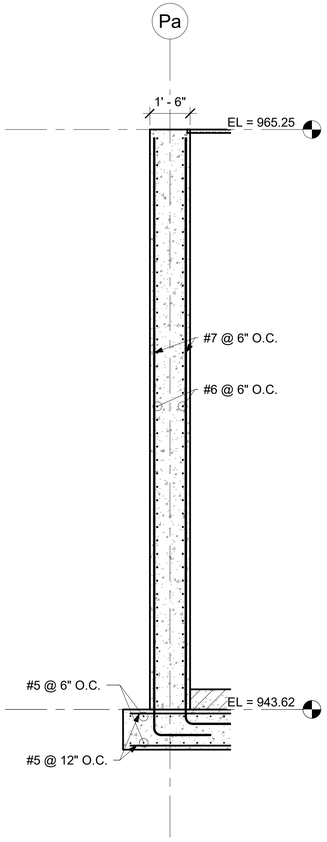

4 **PF - BETWEEN GRIDELINE Pa & Pb 2**
3/8" = 1'-0"

WALL ENGINEERING
PO BOX 1457, DURANT, OK 74702
OKLAHOMA CA #5413 EXP. JUNE 30, 2023

SUBMITTAL / REVISIONS:
DATE | BY | SUBMITTAL/REVISION

SHAWNEE MUNICIPAL AUTHORITY
WASTEWATER SYSTEM IMPROVEMENTS
SHAWNEE, OKLAHOMA

PARSHALL FLUME WALL SECTION

PROJECT NO.
Project Number

DATE
Issue Date

DRAWN BY:
Author

CHECKED BY:
Designer

REVIEWED BY:
Checker

SCALE:

BAR IS ONE INCH ON ORIGINAL DRAWING
0" 1"
IF NOT ONE INCH ON THIS SHEET, ADJUST SCALES ACCORDINGLY

SHEET

PF-S2

Project Number PRINT DATE: 6/22/2022 5:10:17 PM

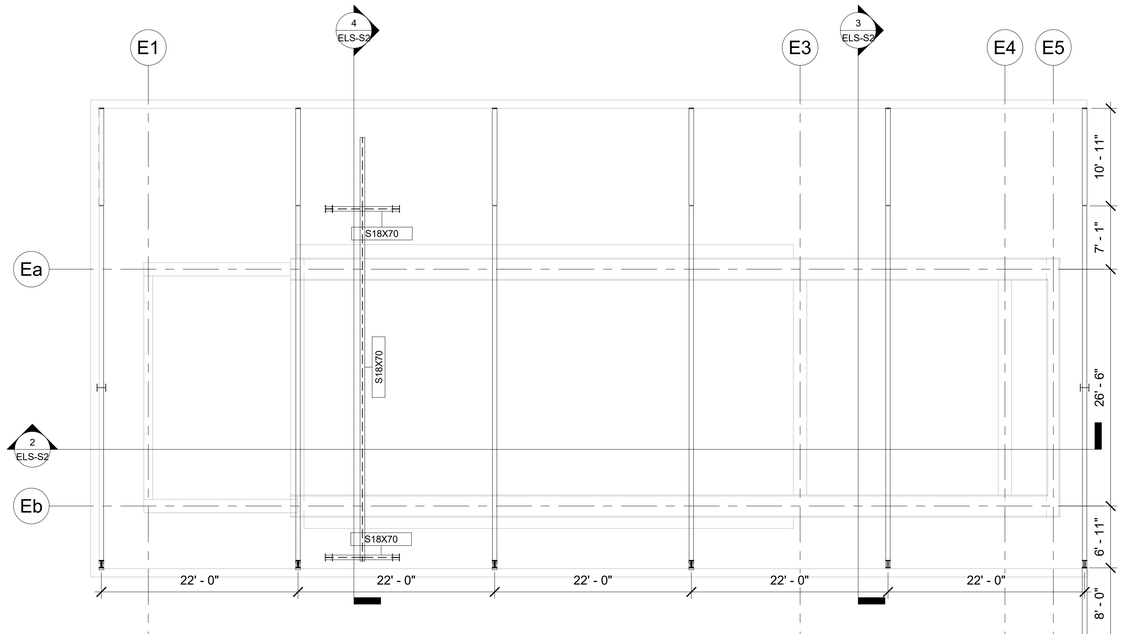

2 EFFLUENT LIFT STATION PEMB FRAMING PLAN

1/8" = 1'-0"

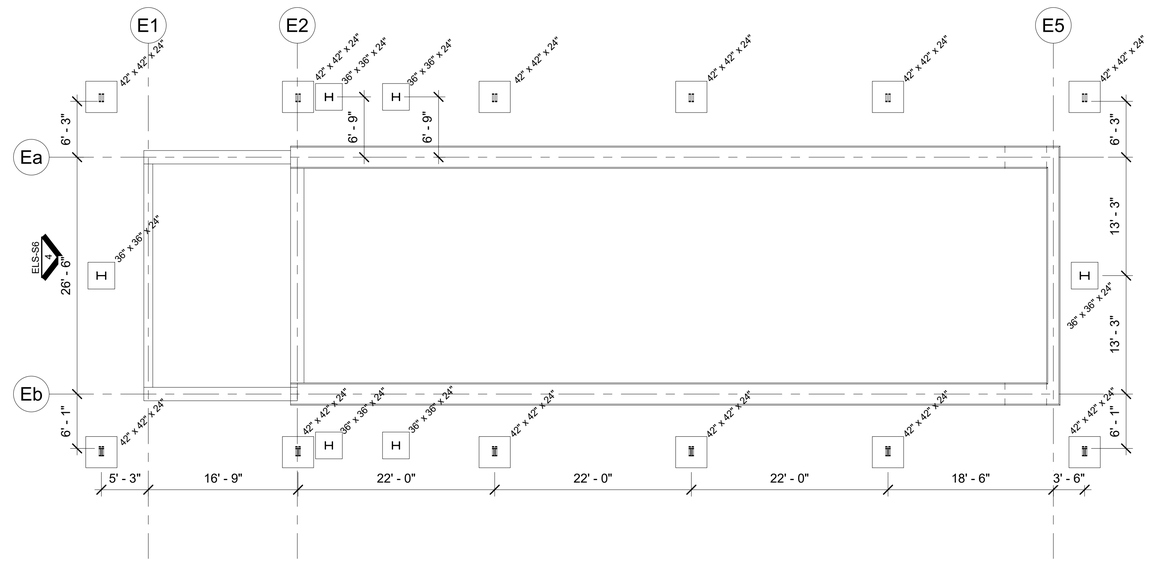

1 EFFLUENT LIFT STATION PEMB FOUNDATION PLAN

1/8" = 1'-0"

WALL ENGINEERING
PO BOX 1457, DURANT, OK 74702
OKLAHOMA CA #5413 EXP. JUNE 30, 2023

SUBMITTAL / REVISIONS:

DATE	BY	SUBMITTAL/REVISION

SHAWNEE MUNICIPAL AUTHORITY
WASTEWATER SYSTEM IMPROVEMENTS
SHAWNEE, OKLAHOMA

EFFLUENT LIFT STATION - FOUNDATION & FRAMING PLAN

PROJECT NO.	Project Number
DATE	Issue Date
DRAWN BY:	Author
CHECKED BY:	Designer
REVIEWED BY:	Checker
SCALE:	

BAR IS ONE INCH ON ORIGINAL DRAWING
0" 1"
IF NOT ONE INCH ON THIS SHEET, ADJUST SCALES ACCORDINGLY

SHEET

ELS-S1

REGISTERED PROFESSIONAL ENGINEER
Stacy Lee Wall
18558
OKLAHOMA

Project Number PRINT DATE: 6/23/2022 9:15:39 AM

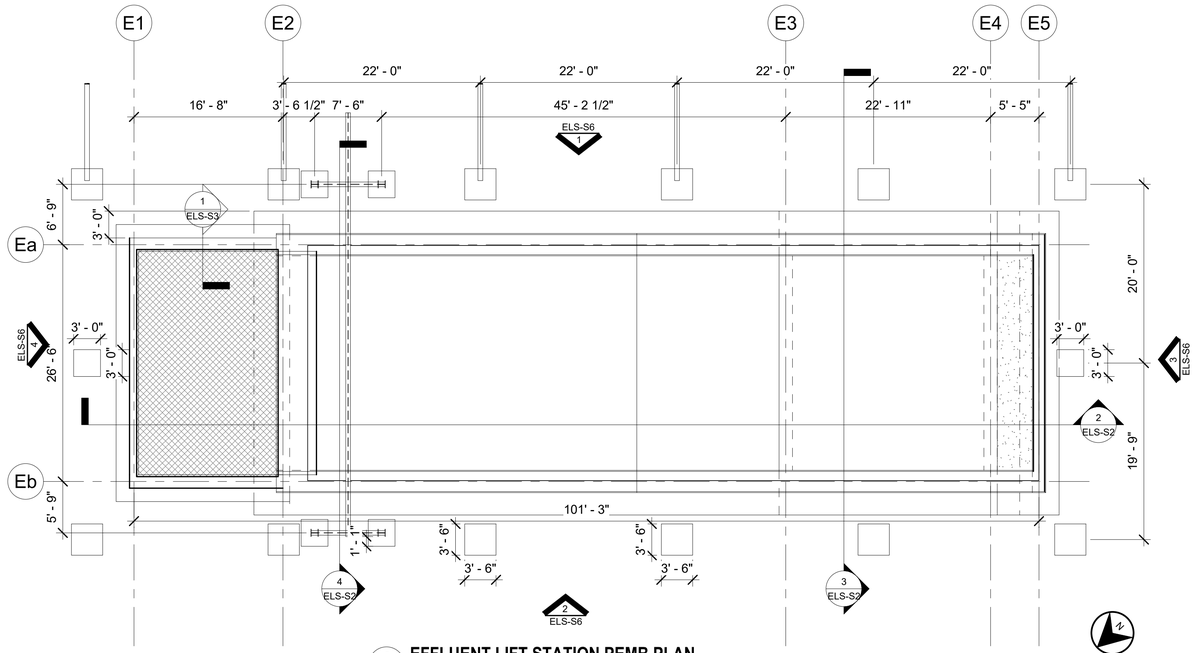

1 EFFLUENT LIFT STATION PEMB PLAN
1/8" = 1'-0"

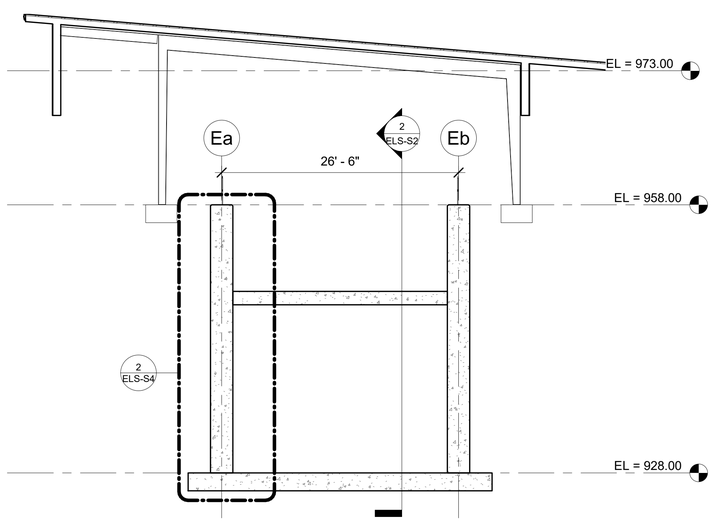

3 EFFLUENT LIFT STATION PEMB TRANSVERSE SECTION
1/8" = 1'-0"

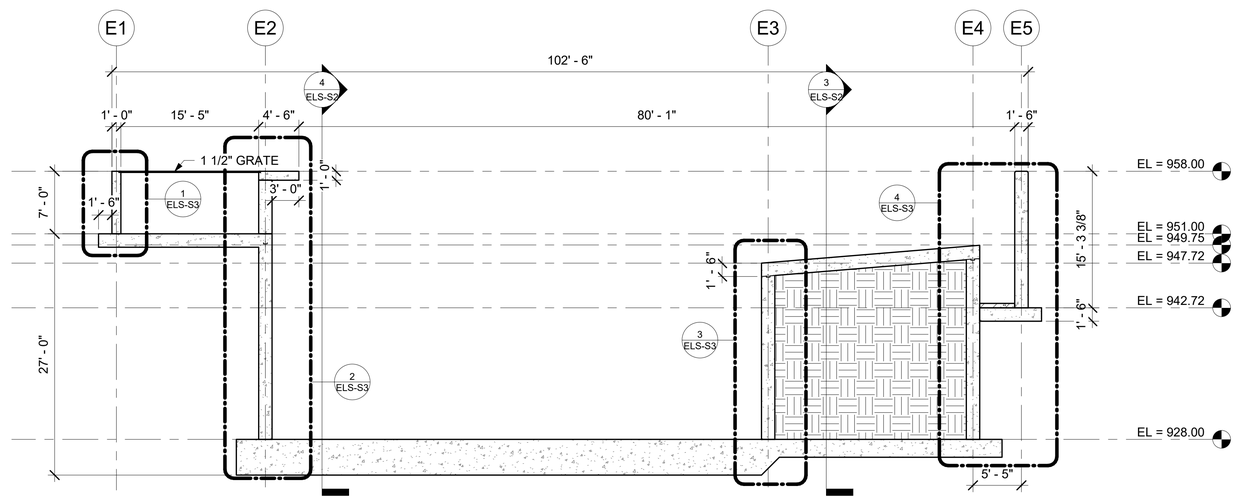

2 EFFLUENT LIFT STATION PEMB LONGITUDINAL SECTION
1/8" = 1'-0"

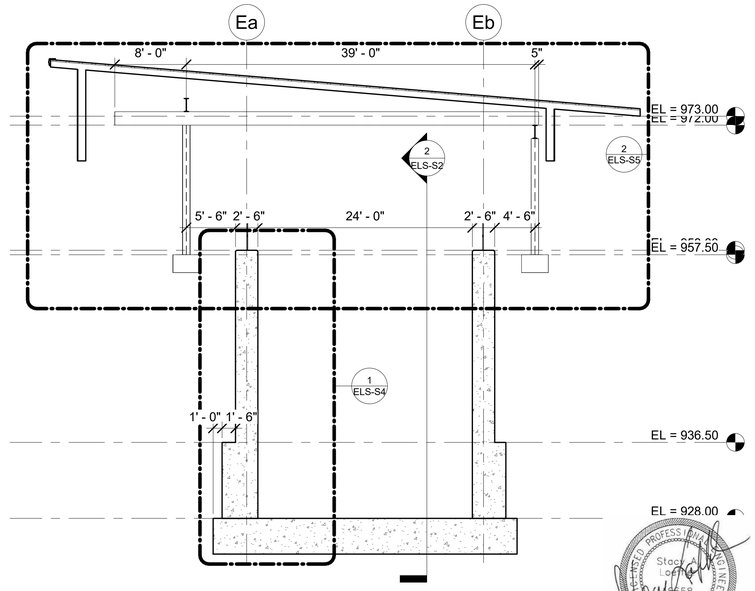

4 EFFLUENT LIFT STATION PEMB TRANSVERSE SECTION
1/8" = 1'-0"

Project Number PRINT DATE: 6/23/2022 9:15:40 AM

WALL ENGINEERING
PO BOX 1457, DURANT OK 74702
OKLAHOMA CA #5413 EXP. JUNE 30, 2023

SUBMITTAL / REVISIONS:
DATE | BY | SUBMITTAL/REVISION

SHAWNEE MUNICIPAL AUTHORITY
WASTEWATER SYSTEM IMPROVEMENTS
SHAWNEE, OKLAHOMA

EFFLUENT LIFT STATION - PLAN & SECTIONS

PROJECT NO.
Project Number

DATE
Issue Date

DRAWN BY:
Author

CHECKED BY:
STACY LOEFLER

REVIEWED BY:
Checker

SCALE:

BAR IS ONE INCH ON ORIGINAL DRAWING
0" 1"
IF NOT ONE INCH ON THIS SHEET, ADJUST SCALES ACCORDINGLY

SHEET

ELS-S2

REGISTERED PROFESSIONAL ENGINEER
Stacy Loefler
18558
OKLAHOMA

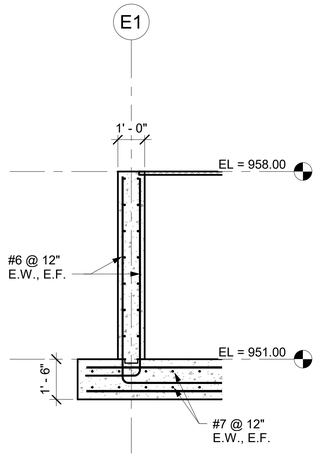

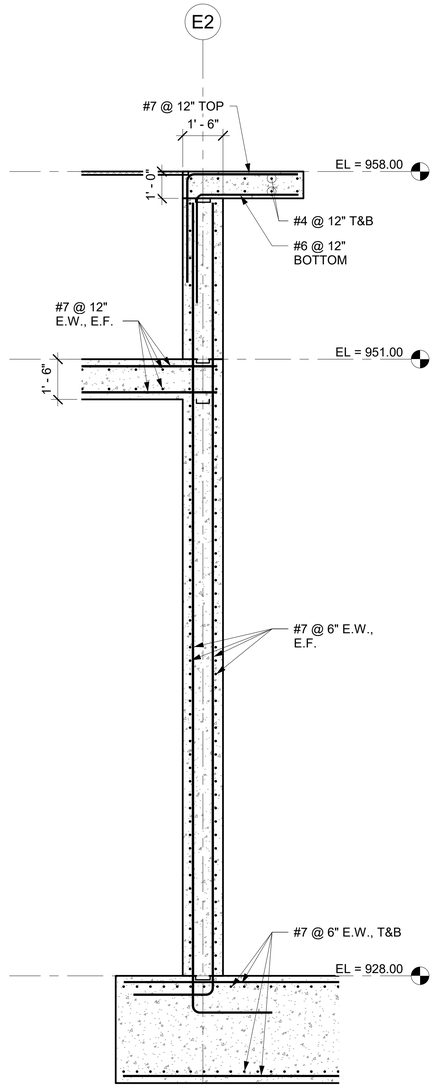

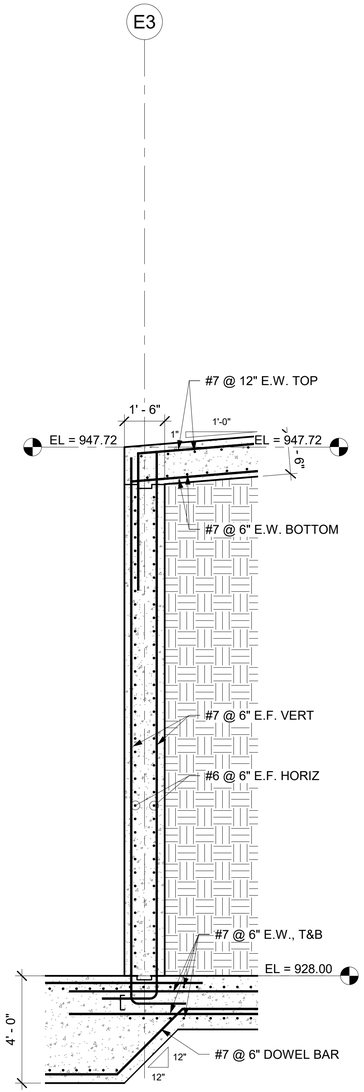

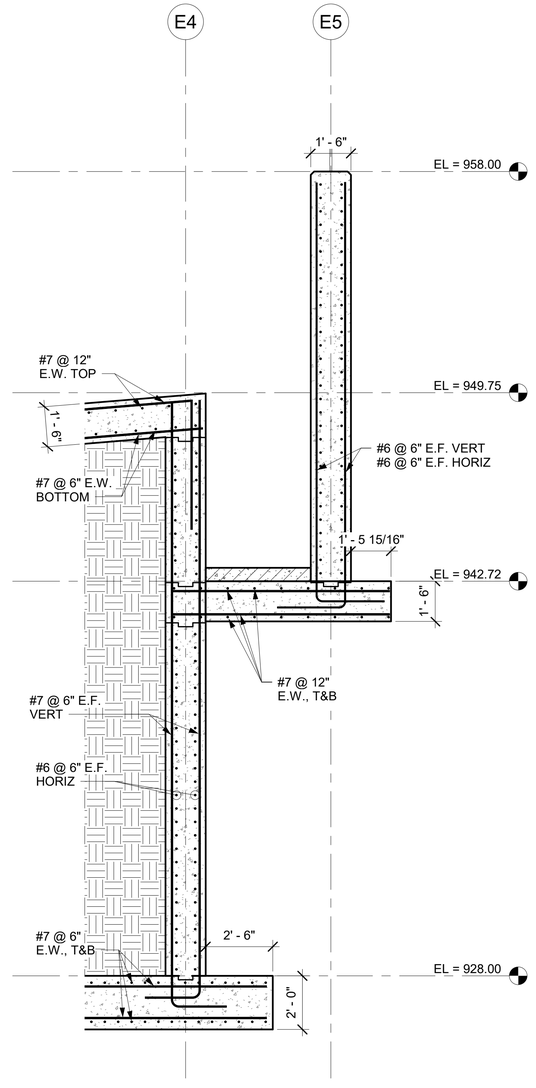

1 **EFFLUENT LIFT STATION PEMB-GRIDLINE E1**
3/8" = 1'-0"

2 **EFFLUENT LIFT STATION PEMB-GRIDLINE E2**
3/8" = 1'-0"

3 **EFFLUENT LIFT STATION PEMB-GRIDLINE E3**
3/8" = 1'-0"

4 **EFFLUENT LIFT STATION PEMB-GRIDLINE E4 & E5**
3/8" = 1'-0"

WALL ENGINEERING
PO BOX 1457, DURANT, OK 74702
OKLAHOMA CA #5413 EXP. JUNE 30, 2023

SUBMITTAL / REVISIONS:

BY	DATE	SUBMITTAL/REVISION

SHAWNEE MUNICIPAL AUTHORITY
WASTEWATER SYSTEM IMPROVEMENTS
SHAWNEE, OKLAHOMA

EFFLUENT LIFT STATION - WALL SECTIONS

PROJECT NO.
Project Number

DATE
Issue Date

DRAWN BY:
Author

CHECKED BY:
STACY LOEFLER

REVIEWED BY:
Checker

SCALE:

BAR IS ONE INCH ON ORIGINAL DRAWING
0" 1"
IF NOT ONE INCH ON THIS SHEET, ADJUST SCALES ACCORDINGLY

SHEET

ELS-S3

REGISTERED PROFESSIONAL ENGINEER
Stacy A. Loefler
19658
OKLAHOMA

Project Number PRINT DATE: 6/23/2022 9:15:42 AM

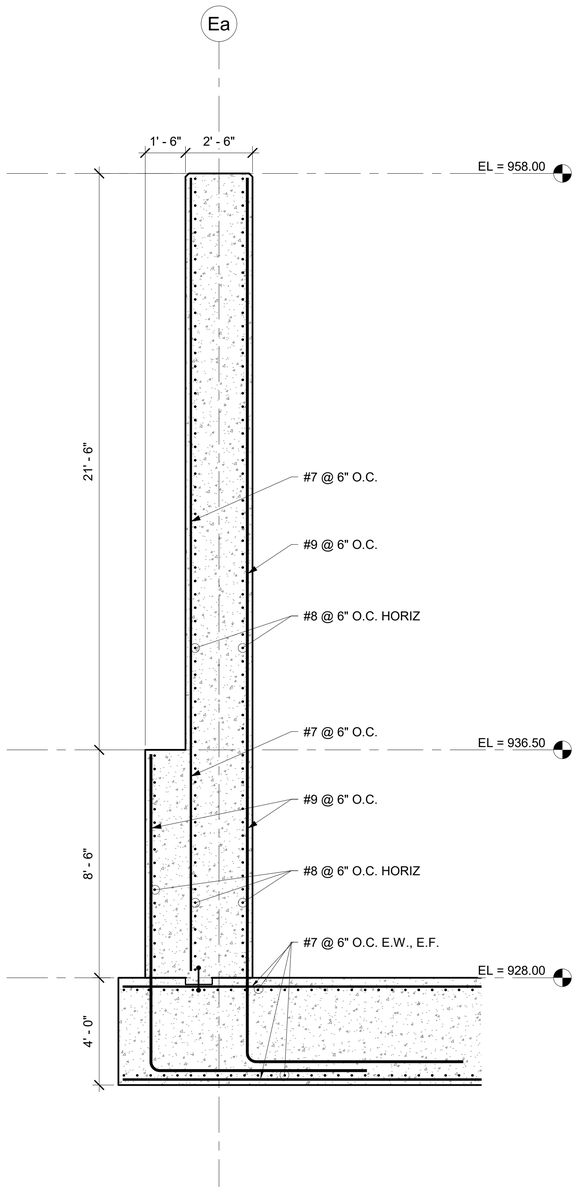

1 EFFLUENT LIFT STATION PEMB-GRIDLINE Ea
3/8" = 1'-0"

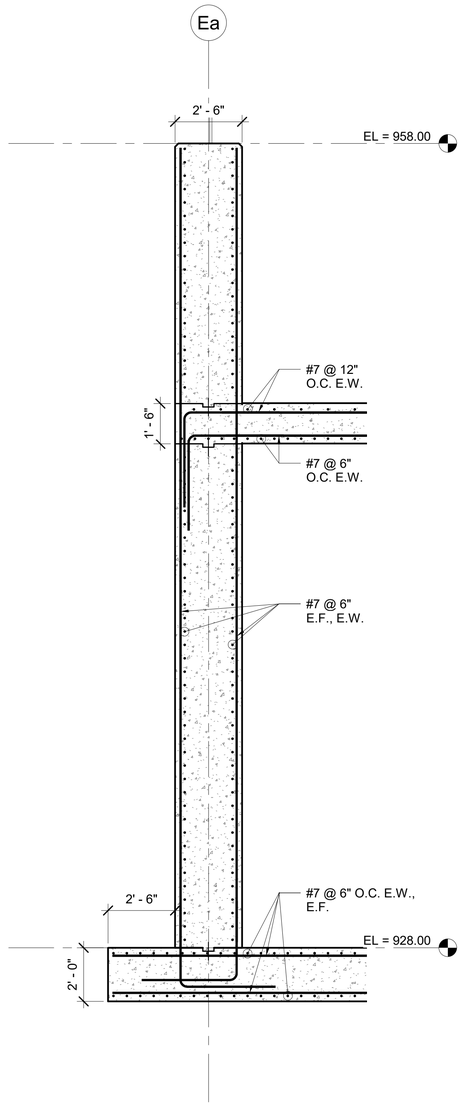

2 EFFLUENT LIFT STATION PEMB-GRIDLINE Ea (2)
3/8" = 1'-0"

WALL ENGINEERING
PO BOX 1457, DURANT, OK 74702
OKLAHOMA CA #5413 EXP. JUNE 30, 2023

SUBMITTAL / REVISIONS:

DATE	BY	SUBMITTAL/REVISION

SHAWNEE MUNICIPAL AUTHORITY
WASTEWATER SYSTEM IMPROVEMENTS
SHAWNEE, OKLAHOMA

EFFLUENT LIFT STATION - WALL SECTIONS

PROJECT NO.
Project Number

DATE
Issue Date

DRAWN BY:
Author

CHECKED BY:
Designer

REVIEWED BY:
Checker

SCALE:

BAR IS ONE INCH ON ORIGINAL DRAWING
0" 1"
IF NOT ONE INCH ON THIS SHEET, ADJUST SCALES ACCORDINGLY

SHEET

ELS-S4

REGISTERED PROFESSIONAL ENGINEER
Stacy A. Long
16558
OKLAHOMA

Project Number PRINT DATE: 6/23/2022 9:15:43 AM

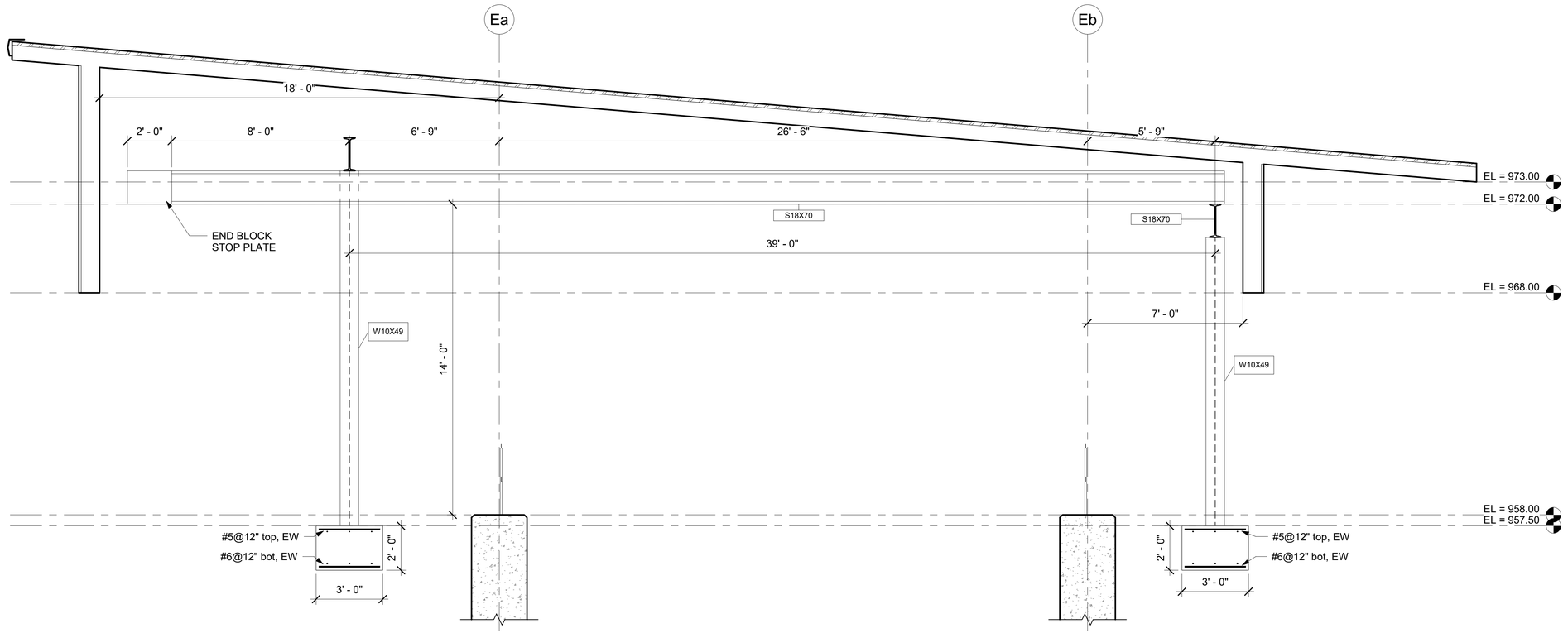

2 EFFLUENT LIFT STATION PEMB-HOIST SYSTEM

3/8" = 1'-0"

WALL ENGINEERING
PO BOX 1457, DURANT, OK 74702
OKLAHOMA CA #5413 EXP. JUNE 30, 2023

SUBMITTAL / REVISIONS:
BY | SUBMITTAL/REVISION
DATE

SHAWNEE MUNICIPAL AUTHORITY
WASTEWATER SYSTEM IMPROVEMENTS
SHAWNEE, OKLAHOMA

EFFLUENT LIFT STATION - WALL SECTIONS

PROJECT NO.
Project Number

DATE
Issue Date

DRAWN BY:
Author

CHECKED BY:
Designer

REVIEWED BY:
Checker

SCALE:

BAR IS ONE INCH ON ORIGINAL DRAWING
0" 1"
IF NOT ONE INCH ON THIS SHEET, ADJUST SCALES ACCORDINGLY

SHEET

ELS-S5

REGISTERED PROFESSIONAL ENGINEER
Stacy A. Long
M 25658
OKLAHOMA

Project Number PRINT DATE: 6/23/2022 9:15:44 AM

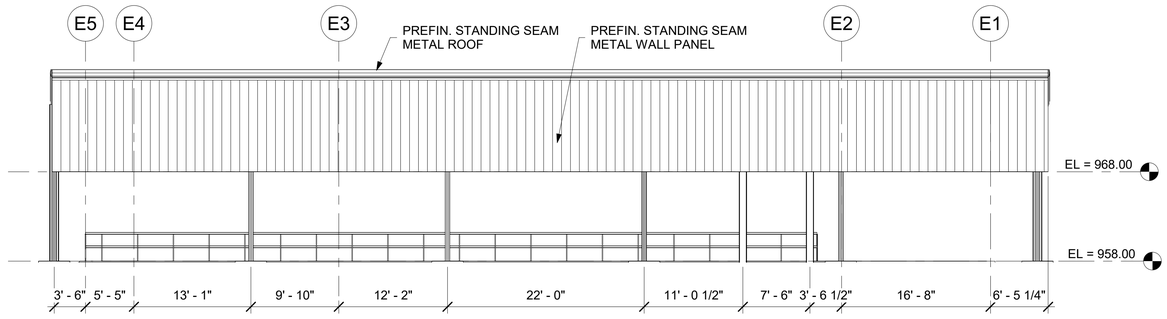

1 EFFLUENT LIFT STATION PEMB NORTH ELEVATION
1/8" = 1'-0"

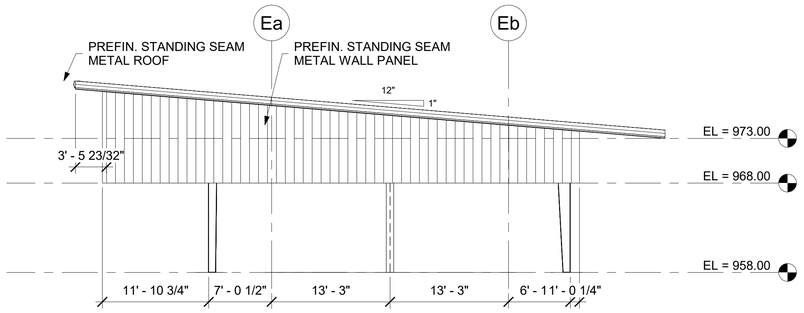

4 EFFLUENT LIFT STATION PEMB WEST ELEVATION
1/8" = 1'-0"

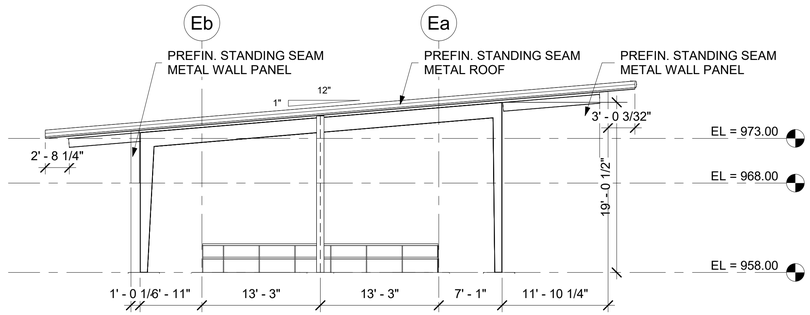

3 EFFLUENT LIFT STATION PEMB EAST ELEVATION
1/8" = 1'-0"

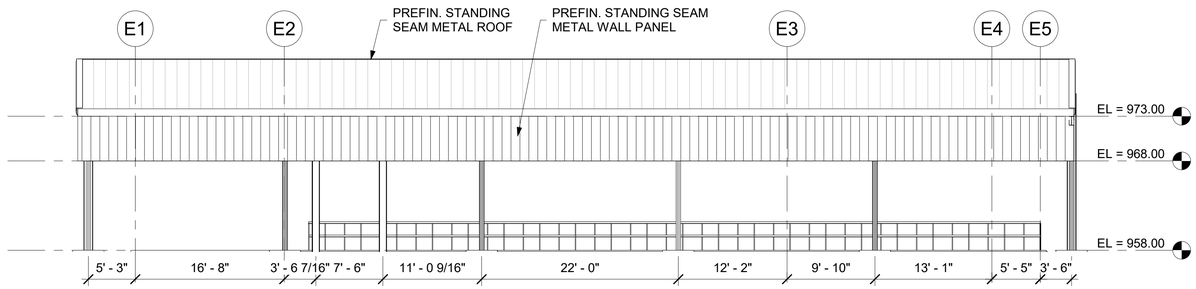

2 EFFLUENT LIFT STATION PEMB SOUTH ELEVATION
1/8" = 1'-0"



WALL ENGINEERING
PO BOX 1457, DURANT, OK 74702
OKLAHOMA CA #5413 EXP. JUNE 30, 2023

SUBMITTAL / REVISIONS:

BY	DATE	SUBMITTAL/REVISION

SHAWNEE MUNICIPAL AUTHORITY
WASTEWATER SYSTEM IMPROVEMENTS
SHAWNEE, OKLAHOMA

EFFLUENT LIFT STATION ELEVATIONS

PROJECT NO.
Project Number

DATE
Issue Date

DRAWN BY:
Author

CHECKED BY:
Designer

REVIEWED BY:
Checker

SCALE:

BAR IS ONE INCH ON ORIGINAL DRAWING
0" 1"
IF NOT ONE INCH ON THIS SHEET, ADJUST SCALES ACCORDINGLY

SHEET

ELS-S6

Project Number PRINT DATE: 6/23/2022 9:15:44 AM

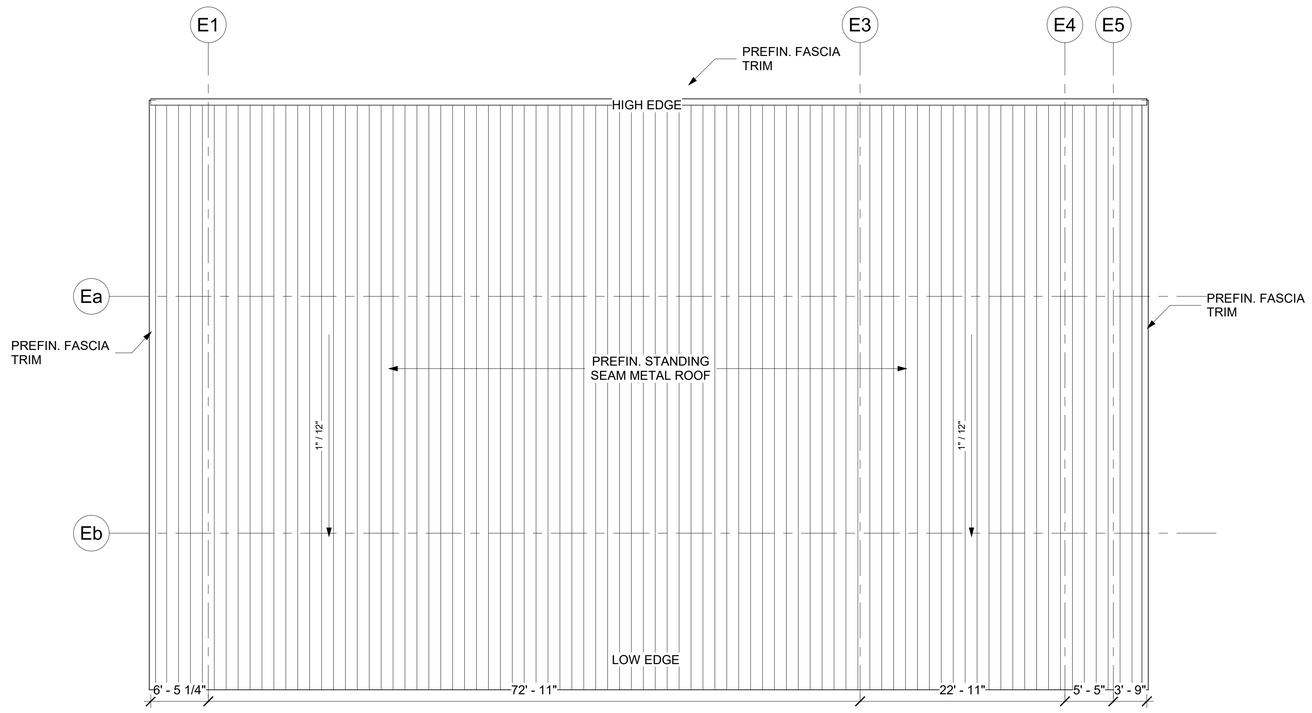

1 EFFLUENT LIFT STATION PEMB ROOF PLAN
1/8" = 1'-0"

WALL ENGINEERING
PO BOX 1457, DURANT, OK 74702
OKLAHOMA CA #5413 EXP. JUNE 30, 2023

SUBMITTAL / REVISIONS:

DATE	BY	SUBMITTAL/REVISION

SHAWNEE MUNICIPAL AUTHORITY
WASTEWATER SYSTEM IMPROVEMENTS
SHAWNEE, OKLAHOMA

EFFLUENT LIFT STATION ROOF PLAN

PROJECT NO.
Project Number

DATE
Issue Date

DRAWN BY:
Author

CHECKED BY:
Designer

REVIEWED BY:
Checker

SCALE:

BAR IS ONE INCH ON ORIGINAL DRAWING
0" 1"
IF NOT ONE INCH ON THIS SHEET, ADJUST SCALES ACCORDINGLY

SHEET

ELS-S7



Project Number PRINT DATE: 6/23/2022 9:15:44 AM

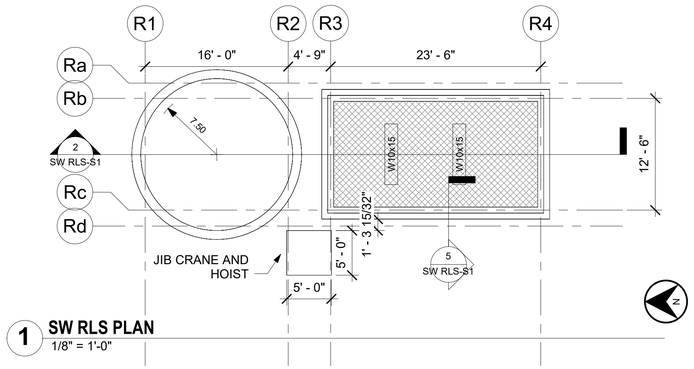

1 SW RLS PLAN
1/8" = 1'-0"

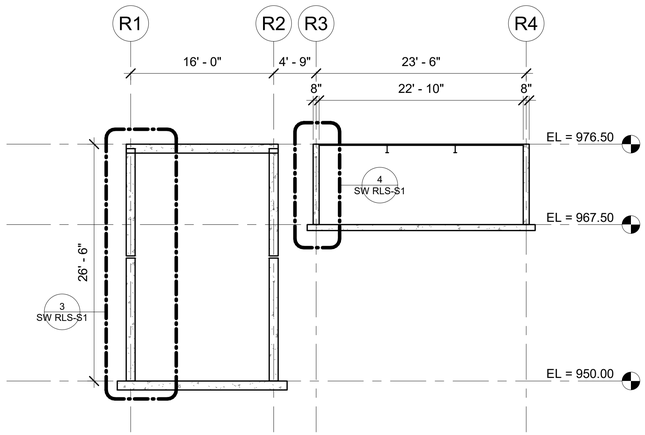

2 SW RLS - LONGITUDINAL SECTION
1/8" = 1'-0"

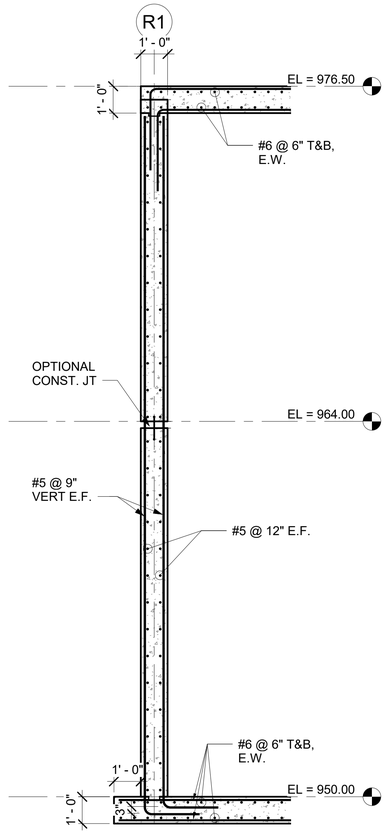

3 SW RLS - GRIDLINE R1
3/8" = 1'-0"

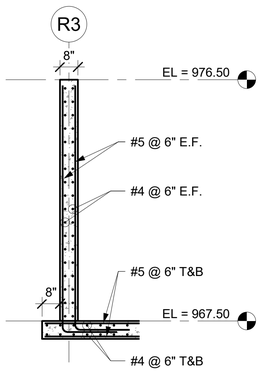

4 SW RLS - GRIDLINE R3
3/8" = 1'-0"

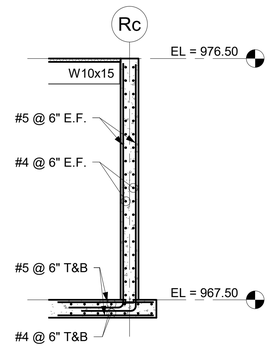

5 SW RLS - GRIDLINE Rc
3/8" = 1'-0"

WALL ENGINEERING
PO BOX 1457, DURANT, OK 74702
OKLAHOMA CA #5413 EXP. JUNE 30, 2023

SUBMITTAL / REVISIONS:
DATE | BY | SUBMITTAL/REVISION

SHAWNEE MUNICIPAL AUTHORITY
WASTEWATER SYSTEM IMPROVEMENTS
SHAWNEE, OKLAHOMA

STORMWATER RETURN LIFT STATION FLOOR PLAN

PROJECT NO.
Project Number

DATE
Issue Date

DRAWN BY:
Author

CHECKED BY:
Designer

REVIEWED BY:
Checker

SCALE:

BAR IS ONE INCH ON ORIGINAL DRAWING
0" 1"
IF NOT ONE INCH ON THIS SHEET, ADJUST SCALES ACCORDINGLY

SHEET

SW
RLS-S1

Project Number PRINT DATE: 6/22/2022 5:10:26 PM

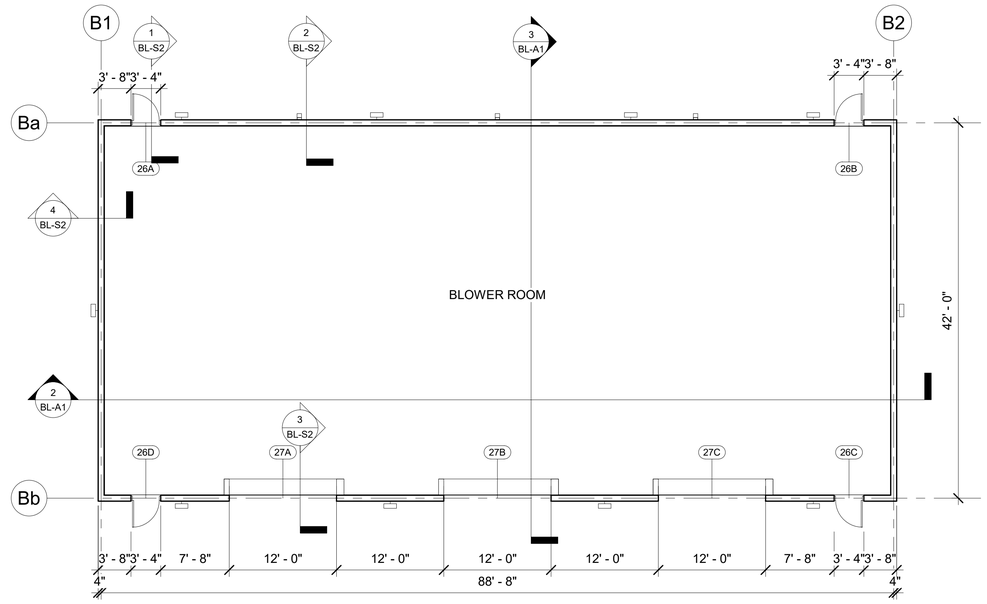

1 BLOWER BUILDING PLAN
1/8" = 1'-0"

DOOR SCHEDULE

MARK	DOOR WIDTH	DOOR HEIGHT	DOOR THK	DOOR ELEV	DOOR MATL	FRAME THK	FRAME ELEV	FRAME MATL	REMARKS
26A	3' - 0"	7' - 0"	1 3/4"	B	HM	8"	D	HM	
26B	3' - 0"	7' - 0"	1 3/4"	B	HM	8"	D	HM	
26C	3' - 0"	7' - 0"	1 3/4"	B	HM	8"	D	HM	
26D	3' - 0"	7' - 0"	1 3/4"	B	HM	8"	D	HM	
27A	12' - 0"	10' - 0"	--	L					
27B	12' - 0"	10' - 0"	--	L					
27C	12' - 0"	10' - 0"	--	L					

DOOR ABBREVIATIONS:
AL= PREFINISHED ANODIZED ALUMINUM
HM = PAINTED HOLLOW METAL
SW = STAINED SOLID CORE WOOD

DOOR SCHEDULE NOTES:
1. REFER TO SHEET A402 FOR DOOR AND FRAME ELEVATIONS.

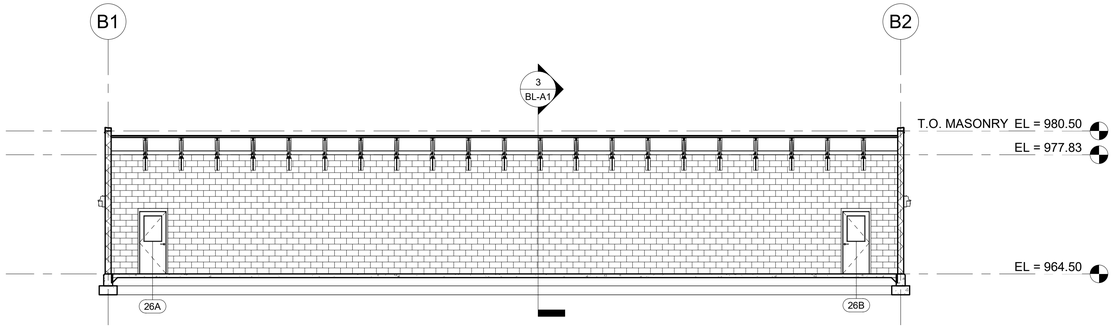

2 BLOWER BUILDING LONGITUDINAL SECTION
1/8" = 1'-0"

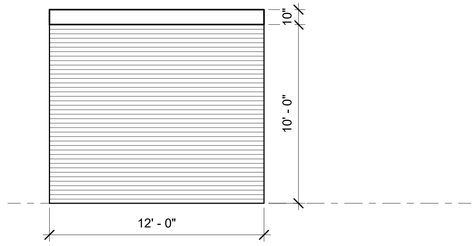

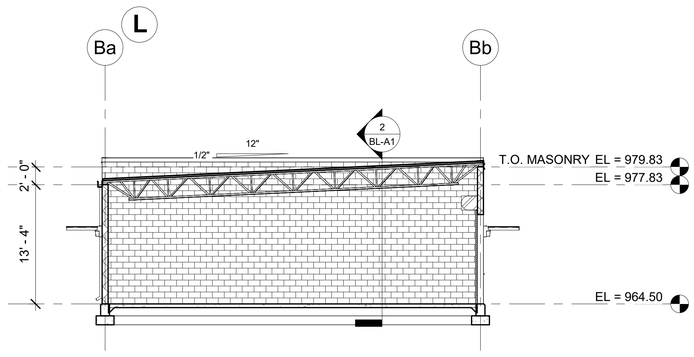

3 BLOWER BUILDING TRANSVERSE SECTION
1/8" = 1'-0"



WALL ENGINEERING
PO BOX 1457, DURANT, OK 74702
OKLAHOMA CA #5413 EXP. JUNE 30, 2023

SUBMITTAL / REVISIONS:
DATE | BY | SUBMITTAL/REVISION

SHAWNEE MUNICIPAL AUTHORITY
WASTEWATER SYSTEM IMPROVEMENTS
SHAWNEE, OKLAHOMA

BLOWER BUILDING PLAN & SECTIONS

PROJECT NO.
Project Number

DATE
Issue Date

DRAWN BY:
Author

CHECKED BY:
Designer

REVIEWED BY:
Checker

SCALE:

BAR IS ONE INCH ON ORIGINAL DRAWING
0" 1"
IF NOT ONE INCH ON THIS SHEET, ADJUST SCALES ACCORDINGLY

SHEET

BL-A1

Project Number PRINT DATE: 6/22/2022 5:09:38 PM

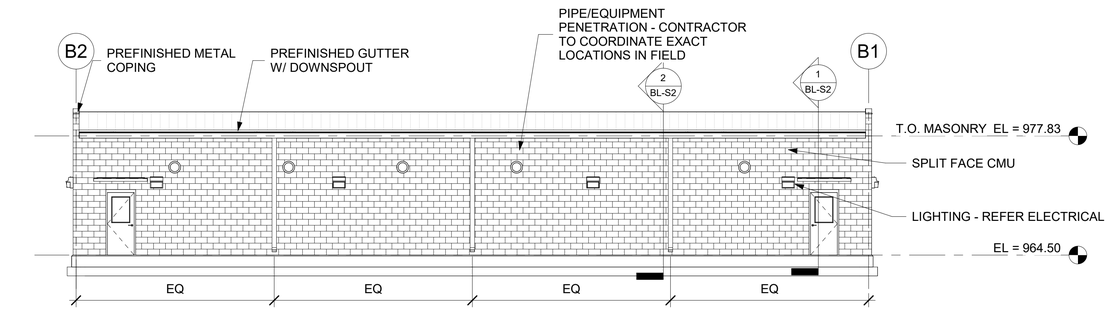

1 BLOWER BUILDING - NORTH ELEVATION
1/8" = 1'-0"

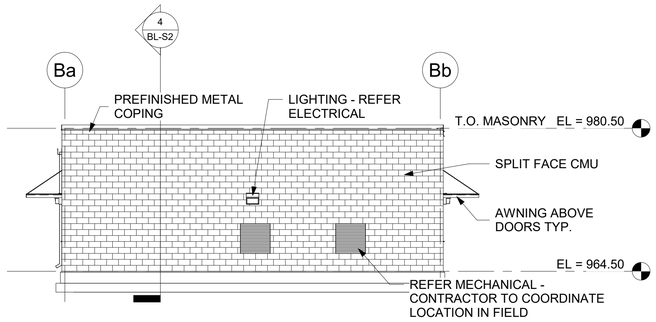

2 BLOWER BUILDING - WEST ELEVATION
1/8" = 1'-0"

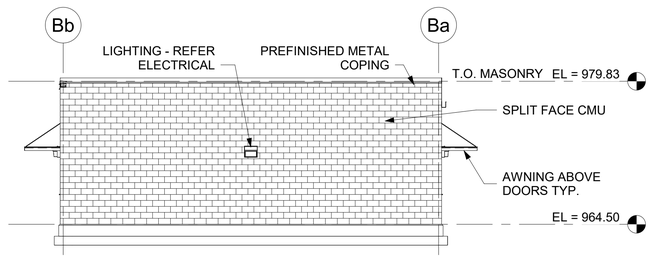

3 BLOWER BUILDING - EAST ELEVATION
1/8" = 1'-0"

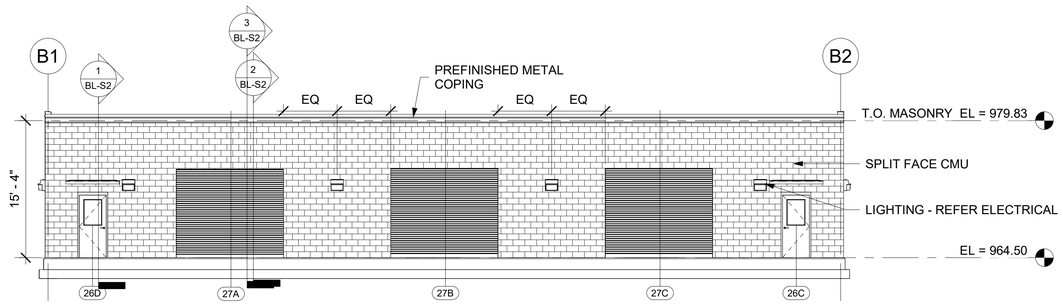

4 BLOWER BUILDING - SOUTH ELEVATION
1/8" = 1'-0"

WALL ENGINEERING
PO BOX 1457, DURANT, OK 74702
OKLAHOMA CA #5413 EXP. JUNE 30, 2023

SUBMITTAL / REVISIONS:
DATE | BY | SUBMITTAL/REVISION

SHAWNEE MUNICIPAL AUTHORITY
WASTEWATER SYSTEM IMPROVEMENTS
SHAWNEE, OKLAHOMA

BLOWER BUILDING ELEVATIONS

PROJECT NO.
Project Number

DATE
Issue Date

DRAWN BY:
Author

CHECKED BY:
Designer

REVIEWED BY:
Checker

SCALE:

BAR IS ONE INCH ON ORIGINAL DRAWING
0" 1"
IF NOT ONE INCH ON THIS SHEET, ADJUST SCALES ACCORDINGLY

STATE OF OKLAHOMA
JENNIFER HAMMOCK
LICENSED ARCHITECT

SHEET
BL-A2

Project Number PRINT DATE: 6/22/2022 5:09:40 PM

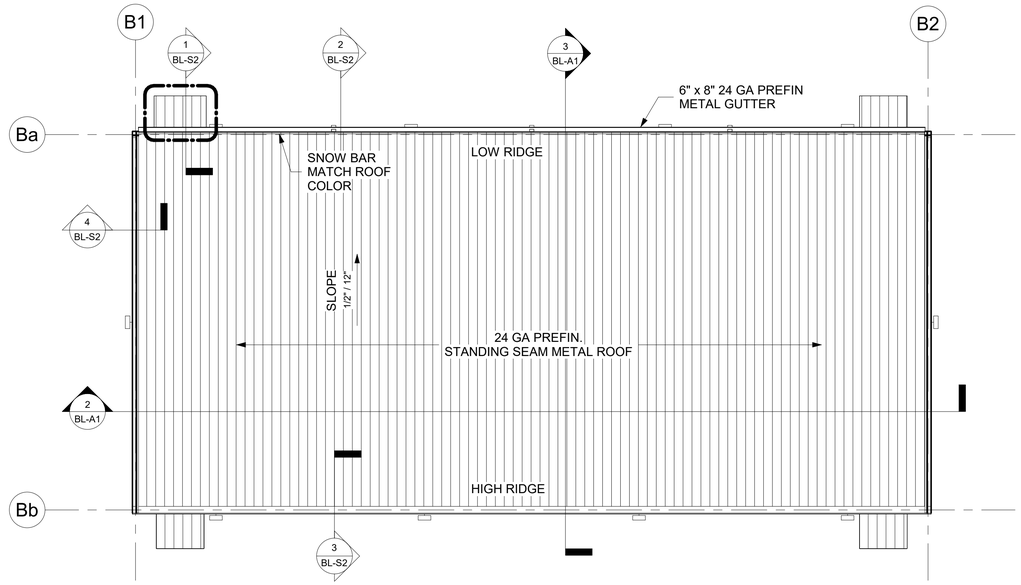

1 BLOWER BUILDING ROOF PLAN
1/8" = 1'-0"

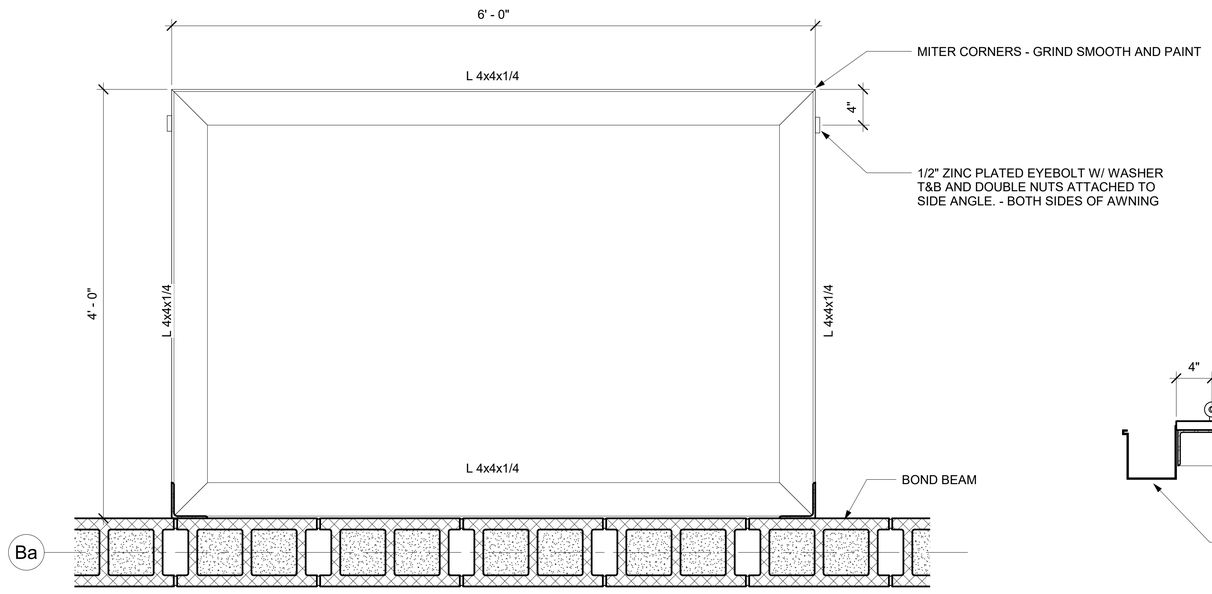

2 BLOWER BUILDING AWNING FRAMING PLAN
1 1/2" = 1'-0"

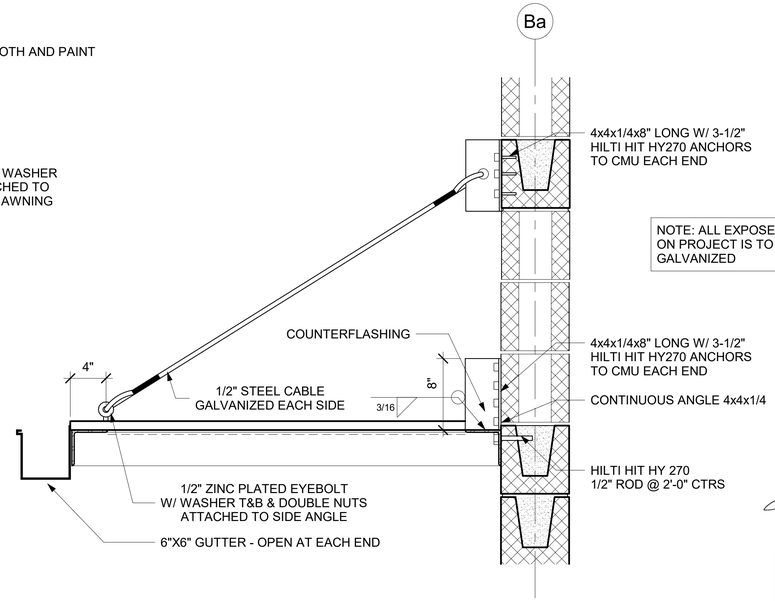

3 BLOWER BUILDING AWNING DETAIL
1 1/2" = 1'-0"

STATE OF OKLAHOMA
JENNIFER HAMMOCK
LICENSED ARCHITECT

LICENSED PROFESSIONAL ENGINEER
Stacy A. Loeffler
16658
OKLAHOMA

WALL ENGINEERING
PO BOX 1457, DURANT, OK 74702
OKLAHOMA CA #5413 EXP. JUNE 30, 2023

SUBMITTAL / REVISIONS:

DATE	BY	SUBMITTAL/REVISION

SHAWNEE MUNICIPAL AUTHORITY
WASTEWATER SYSTEM IMPROVEMENTS
SHAWNEE, OKLAHOMA

BLOWER BUILDING ROOF PLAN

PROJECT NO.
Project Number

DATE
Issue Date

DRAWN BY:
Author

CHECKED BY:
Designer

REVIEWED BY:
Checker

SCALE:

BAR IS ONE INCH ON ORIGINAL DRAWING
0' 1'
IF NOT ONE INCH ON THIS SHEET, ADJUST SCALES ACCORDINGLY

SHEET

BL-A3

Project Number PRINT DATE: 6/22/2022 5:09:41 PM

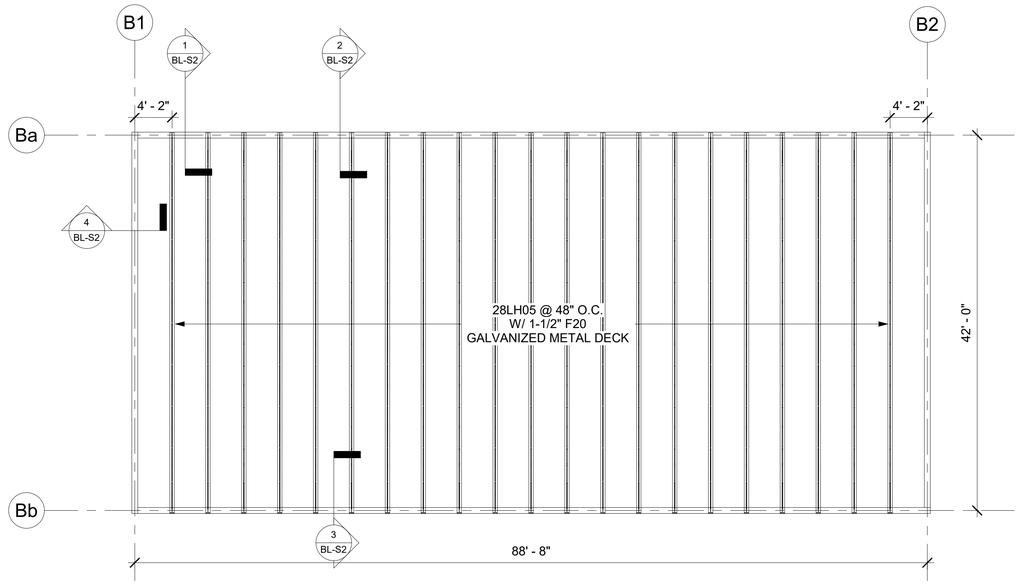

1 BLOWER BUILDING FRAMING PLAN
1/8" = 1'-0"

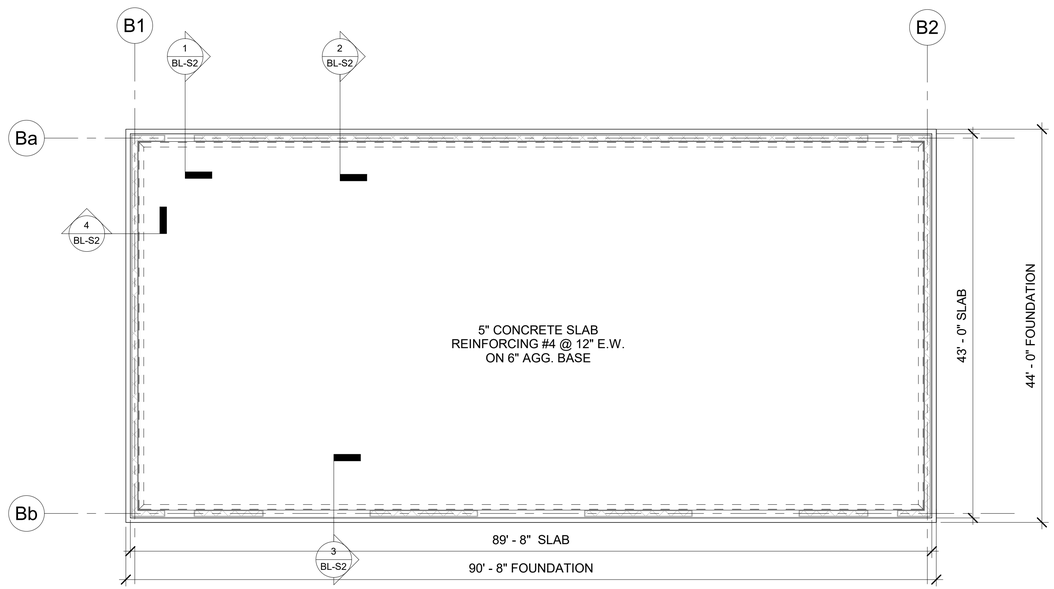

2 BLOWER BUILDING FOUNDATION PLAN
1/8" = 1'-0"



WALL ENGINEERING
PO BOX 1457, DURANT, OK 74702
OKLAHOMA CA #5413 EXP. JUNE 30, 2023

SUBMITTAL / REVISIONS:

DATE	BY	SUBMITTAL/REVISION

SHAWNEE MUNICIPAL AUTHORITY
WASTEWATER SYSTEM IMPROVEMENTS
SHAWNEE, OKLAHOMA

BLOWER BUILDING FOUNDATION & FRAMING PLAN

PROJECT NO.
Project Number

DATE
Issue Date

DRAWN BY:
Author

CHECKED BY:
Designer

REVIEWED BY:
Checker

SCALE:

BAR IS ONE INCH ON ORIGINAL DRAWING
0' 1'
IF NOT ONE INCH ON THIS SHEET, ADJUST SCALES ACCORDINGLY

SHEET

BL-S1

Project Number PRINT DATE: 6/22/2022 5:09:42 PM

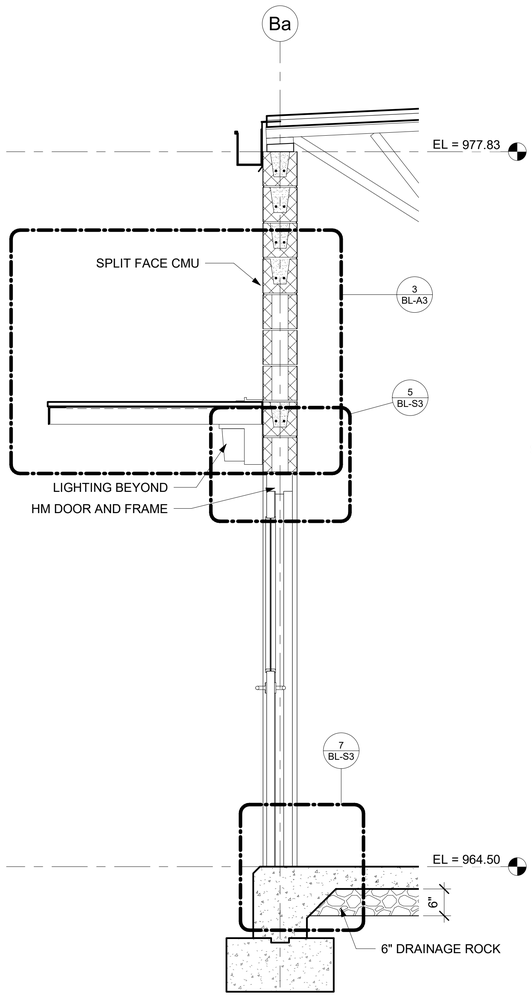

1 **BLOWER BUILDING - GRIDLINE Ba**
3/4" = 1'-0"

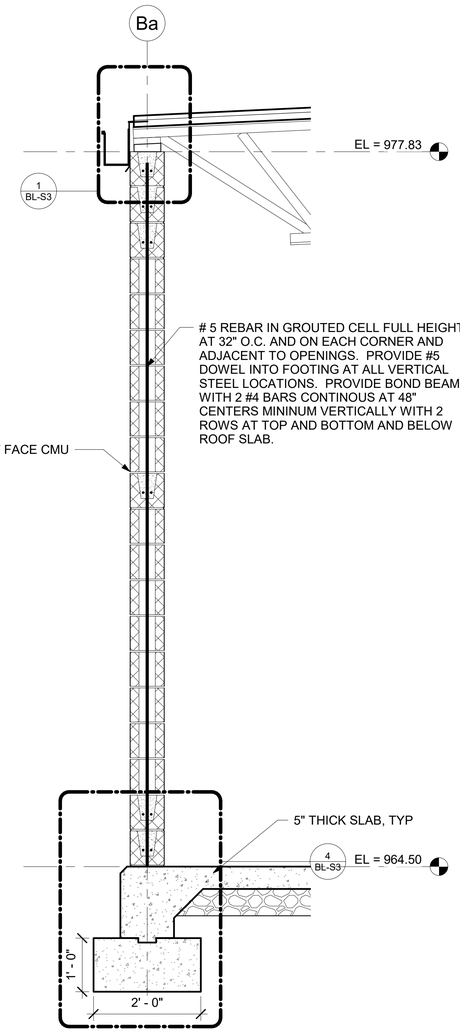

2 **BLOWER BUILDING NORTH WALL**
3/4" = 1'-0"

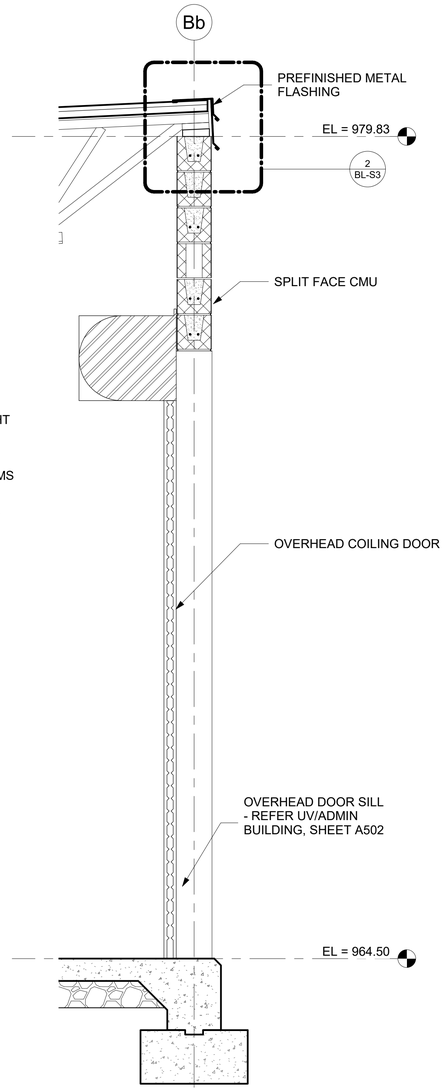

3 **BLOWER BUILDING SOUTH WALL**
3/4" = 1'-0"

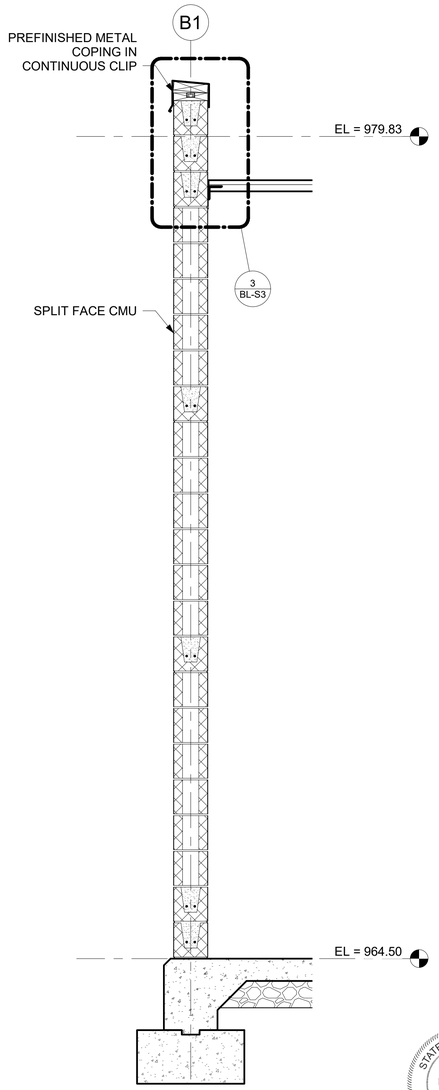

4 **BLOWER BUILDING EAST & WEST WALLS**
3/4" = 1'-0"

WALL ENGINEERING
PO BOX 1457, DURANT, OK 74702
OKLAHOMA CA #5413 EXP. JUNE 30, 2023

SUBMITTAL / REVISIONS:

BY	DATE	SUBMITTAL/REVISION

SHAWNEE MUNICIPAL AUTHORITY
WASTEWATER SYSTEM IMPROVEMENTS
SHAWNEE, OKLAHOMA

BLOWER BUILDING WALL SECTIONS

PROJECT NO.
Project Number

DATE
Issue Date

DRAWN BY:
Author

CHECKED BY:
Designer

REVIEWED BY:
Checker

SCALE:

BAR IS ONE INCH ON ORIGINAL DRAWING
0" 1"
IF NOT ONE INCH ON THIS SHEET, ADJUST SCALES ACCORDINGLY

SHEET

BL-S2

STATE OF OKLAHOMA
JENNIFER HAMMOCK
LICENSED ARCHITECT

REGISTERED PROFESSIONAL ENGINEER
Stacy A. Long
M-19558
OKLAHOMA

Project Number PRINT DATE: 6/22/2022 5:09:43 PM

NOTE:
SPLIT FACE BLOCK AND MORTAR TO HAVE WATER REPELLANT AGENT (ROPEL OR APPROVED EQUAL).

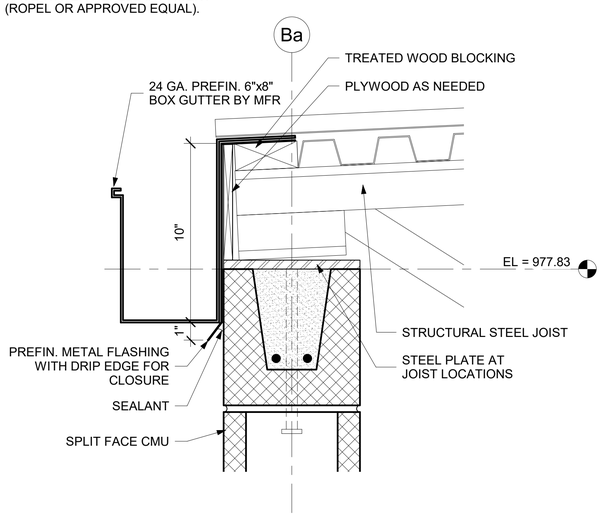

1 BLOWER BUILDING NORTH WALL DETAIL
3" = 1'-0"

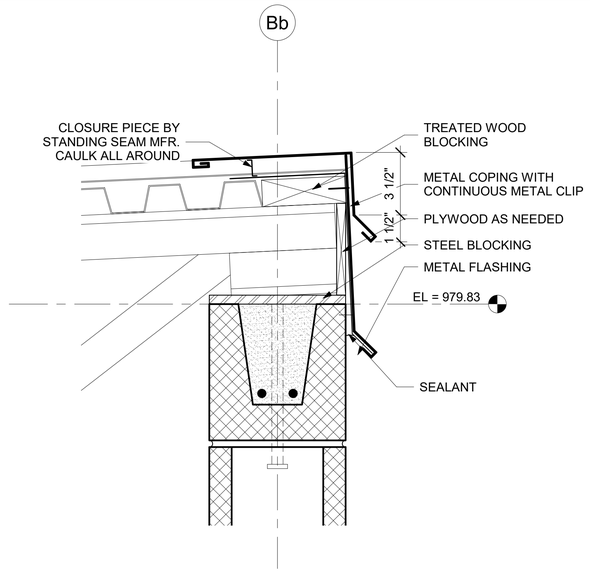

2 BLOWER BUILDING SOUTH WALL DETAIL
3" = 1'-0"

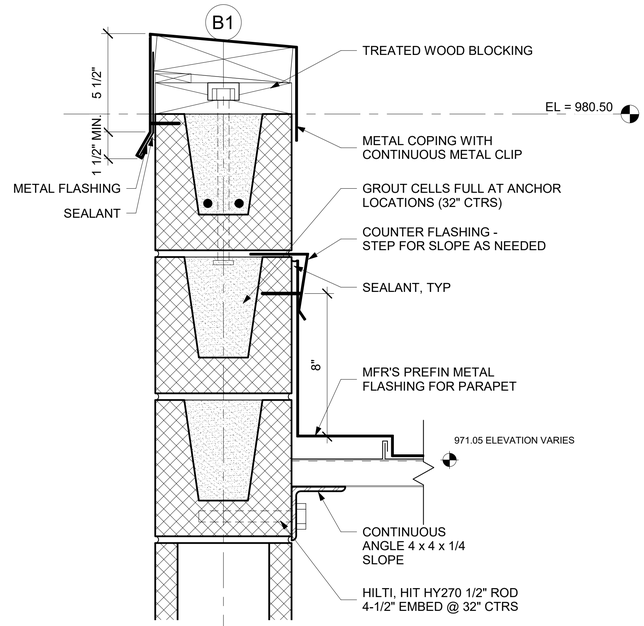

3 BLOWER BUILDING EAST & WEST WALL DETAIL
3" = 1'-0"

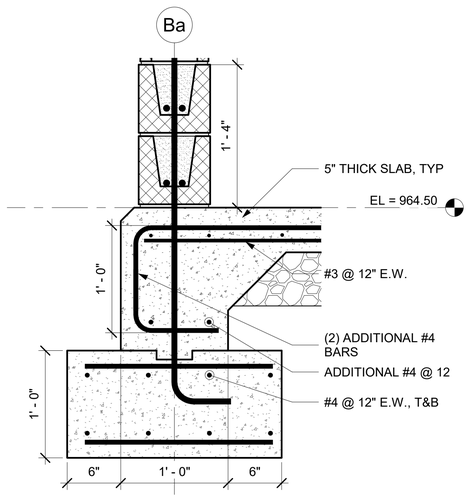

4 BLOWER BUILDING NORTH WALL FOUNDATION DETAIL
1 1/2" = 1'-0"

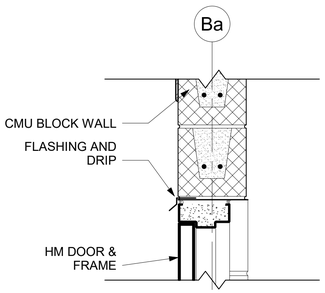

5 DOOR HEAD DETAIL
1 1/2" = 1'-0"

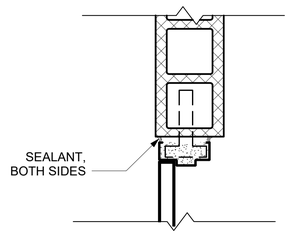

6 DOOR JAMB
1 1/2" = 1'-0"

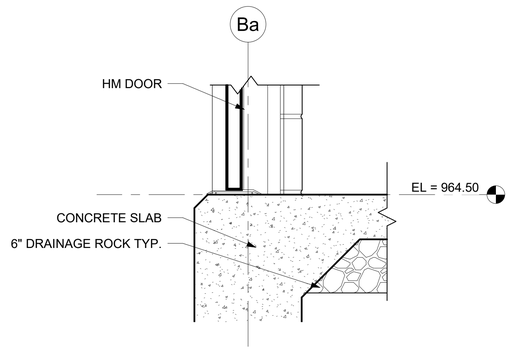

7 DOOR SILL DETAIL
1 1/2" = 1'-0"





Project Number PRINT DATE: 6/22/2022 5:09:45 PM

WALL ENGINEERING
PO BOX 1457, DURANT, OK 74702
OKLAHOMA CA #5413 EXP. JUNE 30, 2023

SUBMITTAL / REVISIONS:

DATE	BY	SUBMITTAL/REVISION

SHAWNEE MUNICIPAL AUTHORITY
WASTEWATER SYSTEM IMPROVEMENTS
SHAWNEE, OKLAHOMA

BLOWER BUILDING DETAILS

PROJECT NO.
Project Number

DATE
Issue Date

DRAWN BY:
Author

CHECKED BY:
Designer

REVIEWED BY:
Checker

SCALE:

BAR IS ONE INCH ON ORIGINAL DRAWING
0' 1'
IF NOT ONE INCH ON THIS SHEET, ADJUST SCALES ACCORDINGLY

SHEET

BL-S3

SHAWNEE MUNICIPAL AUTHORITY
WASTEWATER SYSTEM IMPROVEMENTS
CONTRACT DOCUMENTS VOLUME 7 OF 8 – SOUTHSIDE
JUNE 2022

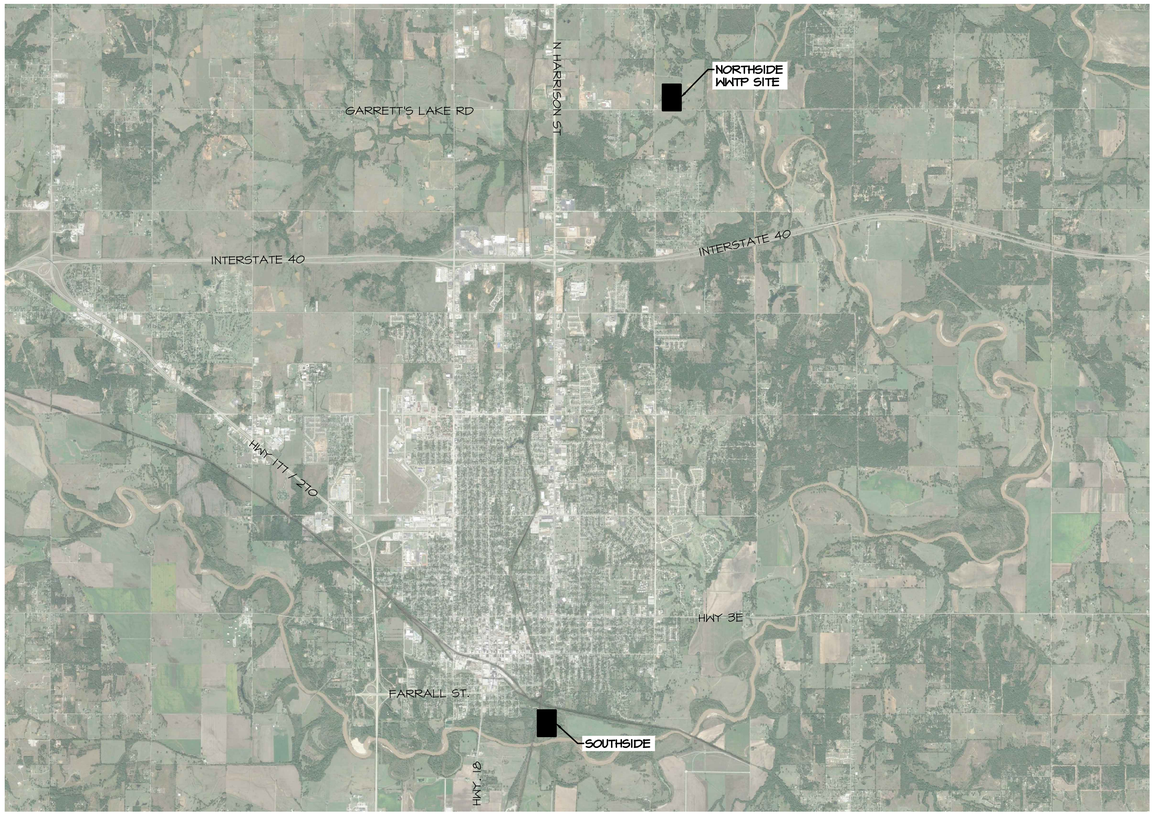

IN COOPORATION WITH OKLAHOMA WATER RESOURCE BOARD
OWRB PROJECT #ORF-20-0018-CWA

BEFORE YOU DIG CALL OKIE

WALL ENGINEERING

City of Shawnee OKLAHOMA

REGISTERED PROFESSIONAL ENGINEER
6/29/22
BRANDON WALL
21108
OKLAHOMA

WALL ENGINEERING PROJECT # SHN-20-01
223 N. WASHINGTON, DURANT, OK 74701
(580) 924-1800
OKLAHOMA CERTIFICATE OF AUTHORIZATION #5413
EXPIRATION DATE: JUNE 30, 2023

INDEX OF SHEETS

SITE CIVIL

C-1	GENERAL CONSTRUCTION NOTES
C-2	SURVEY DATA SHEET 1/3
C-2A	SURVEY DATA SHEET 2/3
C-2B	SURVEY DATA SHEET 3/3
C-3	SURVEY DATA SHEET/CONTROL
C-4	EXISTING SITE PLAN
C-5	DEMOLITION PLAN INITIAL
C-5A	DEMOLITION PLAN FINAL
C-6	HYDRAULIC PROFILE
C-7	LIQUID FLOW SCHEMATIC 1/2
C-7A	LIQUID FLOW SCHEMATIC 2/2
C-8	SITE PLAN
C-9	CONCRETE PAVING PLAN
C-10	GRAVEL SURFACE PLAN
C-11	CONCRETE JOINTING PLAN
C-12	COORDINATE PLAN
C-13	GRADING PLAN
C-14	PRIMARY PIPING PLAN
C-15	SECONDARY PIPING PLAN
C-16	PIPING PROFILES
C-16A	PIPING PROFILES
C-16B	PIPING PROFILES

HEADWORKS

HW-1	INFLUENT BARSCREEN AND GRIT REMOVAL HEADWORKS PLAN VIEW
HW-2	INFLUENT BARSCREEN AND GRIT REMOVAL MECHANICAL SECTION VIEW 1/2
HW-3	INFLUENT BARSCREEN AND GRIT REMOVAL MECHANICAL SECTION VIEW 2/2
HW-4	INFLUENT BARSCREEN AND GRIT REMOVAL MECHANICAL SECTION VIEW & DETAILS
HW-5	INFLUENT BARSCREEN AND GRIT REMOVAL STRUCTURAL SECTION VIEW 1/2
HW-6	INFLUENT BARSCREEN AND GRIT REMOVAL STRUCTURAL SECTION VIEW 2/2
HW-6A	INFLUENT BARSCREEN AND GRIT REMOVAL HOIST SYSTEM AND ELEVATION
HW-7	HEADWORKS CANOPY ELEVATION VIEWS
HW-8	HEADWORKS CANOPY FRAMING PLAN

INFLUENT LIFT STATION

ILS-1	INFLUENT LIFT STATION PLAN VIEW
ILS-2A	INFLUENT LIFT STATION SECTION VIEW 1/2
ILS-2B	INFLUENT LIFT STATION SECTION VIEW 2/2
ILS-3	INFLUENT LIFT STATION HOIST PLAN AND ELEVATION
ILS-4	INFLUENT LIFT STATION STRUCTURAL PLAN AND SECTION VIEW
MM-1	MAGNETIC FLOW METER FEB/EFFLUENT MAG METER PLAN AND SECTION VIEW

STORMWATER

SW-1	EXISTING PRIMARY FLOW EQUALIZATION BASIN PLAN & SECTION
SW-2	PROPOSED PRIMARY FLOW EQUALIZATION BASIN PLAN & SECTION
SW-3	PRIMARY FLOW EQUALIZATION BASIN DETAILS
SW-4	SECONDARY FLOW EQUALIZATION BASIN PLAN, SECTION & DETAILS
SW-4A	SECONDARY FLOW EQUALIZATION BASIN PLAN, SECTION & DETAILS
SW-4B	SECONDARY FLOW EQUALIZATION BASIN EXISTING GRADING
SW-5	STORMWATER RETURN LIFT STATION PLAN, SECTION & DETAILS

ELECTRICAL BUILDING

EB-1	ELECTRICAL BUILDING FLOOR/FOUNDATION PLAN
EB-2	ELECTRICAL BUILDING EXTERIOR ELEVATION VIEWS
EB-3	ELECTRICAL BUILDING FOUNDATION SECTIONS
EB-4	ELECTRICAL BUILDING STRUCTURAL DETAILS
EB-5	ELECTRICAL BUILDING ROOF PLAN

MISCELLANEOUS DETAILS

DT-1	MISCELLANEOUS DETAILS 1/8
DT-2	MISCELLANEOUS DETAILS 2/8
DT-3	MISCELLANEOUS DETAILS 3/8
DT-4	MISCELLANEOUS DETAILS 4/8
DT-5	MISCELLANEOUS DETAILS 5/8
DT-5	MISCELLANEOUS DETAILS 6/8
DT-5	MISCELLANEOUS DETAILS 7/8
DT-5	MISCELLANEOUS DETAILS 8/8

ELECTRICAL

E-1	ELECTRICAL LEGEND & ABBREVIATIONS
E-2	ELECTRICAL SYSTEM NOTES
E-3	ELECTRICAL ASSET SCHEDULE
E-4	CONTROL SYSTEM ONE-LINE DIAGRAM 1
E-5	CONTROL SYSTEM ONE-LINE DIAGRAM 2
E-6	ELECTRICAL SITE PLAN
E-7	ELECTRICAL BUILDING POWER, CONTROL & LIGHTING PLANS
E-8	INFLUENT LIFT STATION "ILS" POWER, CONTROL & LIGHTING PLAN
E-9	HEADWORKS "HW" POWER, CONTROL PLAN
E-10	HEADWORKS "HW" LIGHTING PLAN
E-11	FLOW EQUALIZATION BASIN RETURN LIFT STATION "FEBLS" POWER, CONTROL & LIGHTING PLANS
E-12	PRIMARY FLOW EQUALIZATION BASIN "PFEB" ELECTRICAL PLAN
E-13	POWER SYSTEM ONE-LINE DIAGRAM 1
E-14	POWER SYSTEM ONE-LINE DIAGRAM 2
E-15	POWER SYSTEM ONE-LINE DIAGRAM 3
E-16	POWER SYSTEM SCHEDULES 1
E-17	POWER SYSTEM SCHEDULES 2
E-18	CONTROL SYSTEM POWER & SIGNAL DIAGRAM
E-19	TELEVISION SYSTEM POWER & SIGNAL DIAGRAM
E-20	ELECTRICAL DETAILS 1/4
E-21	ELECTRICAL DETAILS 2/4
E-22	ELECTRICAL DETAILS 3/4
E-23	ELECTRICAL DETAILS 4/4
E-24	ELECTRICAL WIRING DIAGRAMS

WALL ENGINEERING
223 N. WASHINGTON, DURANT, OK 74701
OKLAHOMA CA #5413 EXP. JUNE 30, 2023

SUBMITTAL / REVISIONS:

DATE	BY	SUBMITTAL / REVISION
06/22	TL	ISSUED FOR BIDDING

SHAWNEE MUNICIPAL AUTHORITY
SOUTHSIDE IMPROVEMENTS
SHAWNEE, OKLAHOMA

SHEET INDEX

PROJECT NO.
SHN-20-01

DATE
06/22

DRAWN BY:
TL

CHECKED BY:
BW

REVIEWED BY:
DBW

SCALE:
NOT TO SCALE

BAR IS ONE INCH ON ORIGINAL DRAWING
0" 1"
IF NOT ONE INCH ON THIS SHEET, ADJUST SCALES ACCORDINGLY

SHEET
S1-1

GENERAL

1. ALL NOTES LISTED ON THIS SHEET APPLY TO ALL SHEETS OF THE DRAWINGS AS IF THEY WERE WRITTEN ON EACH SHEET.
2. NOTIFY OWNER 48 HOURS PRIOR TO CONSTRUCTION.
3. VERIFY ALL EXISTING CONDITIONS AND OBSTRUCTIONS INCLUDING LOCATION AND DIMENSIONS BEFORE STARTING WORK AND SHALL NOTIFY THE ENGINEER OF ANY DISCREPANCIES.
4. PRIOR TO INSTALLATION OF RELEVANT FACILITIES CONTRACTOR SHALL, AT HIS OWN EXPENSE, UNCOVER AND OTHERWISE DETERMINE THE DEPTH OF UTILITIES WHICH, IN HIS OPINION, COULD INTERFERE WITH CONSTRUCTION.
5. ALL DIMENSIONS SHOWN WITH ± SHALL BE CONFIRMED BY THE CONTRACTOR ACCORDING TO ACTUAL FIELD CONDITIONS OR EQUIPMENT/STRUCTURE REQUIREMENTS.
6. ALL MISCELLANEOUS REMOVAL ITEMS REQUIRED FOR CONSTRUCTION SHALL BE FIELD LOCATED BY THE CONTRACTOR PRIOR TO BIDDING. THESE ITEMS WILL NOT BE MEASURED FOR PAYMENT AND SHALL BE INCLUDED IN THE PRICE BID FOR ASSOCIATED ITEMS OF WORK.
7. TRAFFIC CONTROL DEVICES SHALL BE FURNISHED AND MAINTAINED BY THE CONTRACTOR THROUGHOUT THIS PROJECT IN ACCORDANCE WITH THE LATEST VERSION OF THE MANUAL OF UNIFORM TRAFFIC CONTROL DEVICES AND/OR AS REQUIRED BY THE DEPARTMENT OF TRANSPORTATION OR COUNTY PERMITS FOR CONSTRUCTION IN RIGHT-OF-WAY.
8. SUBMIT AN EROSION CONTROL PLAN (SWPPP) PRIOR TO CONSTRUCTION AND SHALL MAINTAIN SWPPP THROUGHOUT DURATION OF CONSTRUCTION IN ACCORDANCE WITH SPECIFICATIONS.
9. EXISTING FACILITY AND UTILITY INFORMATION SHOWN ON THE DRAWINGS WAS OBTAINED FROM AVAILABLE RECORDS, LOCATES, AND AVAILABLE FILES. NEITHER THE OWNER NOR THE ENGINEER ASSUMES ANY RESPONSIBILITY FOR FACILITIES AND UTILITIES NOT SHOWN OR NOT IN THE LOCATION SHOWN. THE CONTRACTOR SHALL FIELD VERIFY ALL LOCATIONS, SIZES, MATERIALS, TYPES, AND ELEVATIONS SHOWN AROUND OR NEAR AREAS OF CONSTRUCTION PRIOR TO THE START OF CONSTRUCTION.
10. PERFORM ALL WORK WITHIN DESIGNATED EASEMENTS. CONTRACTOR SHALL NOT ENCROACH OR TRESPASS INTO PRIVATE PROPERTY WITHOUT WRITTEN APPROVAL FROM THE PROPERTY OWNER.
11. MAINTAIN LOCAL AND THROUGH TRAFFIC FOR ALL STREETS AT ALL TIMES WITHOUT CLOSURES OR RESTRICTIONS EXCEPT AS PART OF THE TRAFFIC CONTROL PLAN.
12. MAINTAIN REASONABLE ACCESS TO ALL PROPERTIES AT ALL TIMES. DO NOT RESTRICT DRIVEWAY ACCESS WITHOUT OWNER'S APPROVAL. RESTORE DRIVEWAY ACCESS AT THE END OF EACH DAY. PROVIDE TEMPORARY MEASURES AS NEEDED (SUCH AS GRAVEL) TO MAINTAIN DRIVEWAY ACCESS.
13. KEEP ACCURATE RECORDS OF ALL CONSTRUCTION THAT DEVIATES FROM THE DRAWINGS. THE CONTRACTOR SHALL FURNISH TO THE ENGINEER ACCURATE "AS-BUILT" RED LINE DRAWINGS FOLLOWING COMPLETION OF CONSTRUCTION.
14. TAKE SPEIAL PRECAUTIONS IN THE VICINITY OF ANY OVERHEAD AND UNDERGROUND ELECTRIC LINES. CONTRACTOR SHALL ABIDE BY THE MOST RECENT NATIONAL ELECTRIC CODE FOR WORKING AROUND OVERHEAD ELECTRIC LINES AS WELL AS OTHER LOCAL, STATE OR FEDERALS LAWS / REQUIREMENTS.
15. CONFORM TO ALL APPLICABLE FEDERAL, STATE AND LOCAL LAWS GOVERNING EXCAVATION. TRENCH SIDE SLOPES SHALL MEET OSHA REQUIREMENTS THAT ARE IN EFFECT AT THE TIME OF CONSTRUCTION. CONTRACTOR SHALL SUBMIT A TRENCH SAFETY PLAN PRIOR TO CONSTRUCTION.
16. THIS PROJECT IS SUBJECT TO AMERICAN IRON AND STEEL (AIS) REQUIREMENTS. ALL IRON AND STEEL PRODUCTS FOR CONSTRUCTION, ALTERATION, MAINTENANCE, OR REPAIRS INCORPORATED MUST BE PRODUCED IN THE UNITED STATES.
17. PROVIDE DUST CONTROL AT ALL TIMES DURING CONSTRUCTION.
18. ANY WORK PERFORMED WITHOUT THE KNOWLEDGE OF THE ENGINEER, INSPECTOR OR OWNER'S REPRESENTATIVE IS SUBJECT TO REMOVAL AND REPLACEMENT AT THE CONTRACTOR'S EXPENSE.

EARTHWORK

1. ALL COMPACTED SUBGRADE AND BASE NOT ACCESSIBLE TO MECHANICAL COMPACTION EQUIPMENT SHALL BE HAND COMPACTED USING WHACKER PACKERS.
2. SUBGRADE PREPARATION FOR ALL STRUCTURES AND BUILDINGS ON DRAWINGS SHALL BE AS FOLLOWS: OVER-EXCAVATE 30 INCHES BELOW BASE OF CONCRETE, SCARIFY AND COMPACT TOP 12", COMPACT TO 95% STANDARD PROCTOR DENSITY, INSTALL NON-WOVEN NEEDLE PUNCHED GEOTEXTILE FABRIC, INSTALL 30 INCHES OF CRUSHER RUN AGGREGATE BASE IN 10" LIFTS, COMPACT TO 95% MODIFIED PROCTOR DENSITY. BASE OF CONCRETE SHALL BE CONSIDERED THE BOTTOM OF SLAB AND NOT THE BASE OF FOOTINGS/STEM WALLS. OVER EXCAVATION MAY BE DELETED WHERE ROCK IS PRESENT. #57 ROCK SHALL BE SUBSTITUTED FOR AGG BASE WHERE GROUNDWATER IS PRESENT. ALL FILL MATERIAL REQUIRED TO ACHIEVE FINAL GRADE BELOW THE 30" ROCK LAYER SHALL BE CONSTRUCTED WITH ONSITE OR IMPORTED FILL MATERIAL COMPACTED TO 95% STANDARD PROCTOR DENSITY.
3. ELEVATIONS GIVEN ARE FINISHED GRADE UNLESS OTHERWISE NOTED.
4. NO FIRES WILL BE ALLOWED UNLESS OTHERWISE NOTED. TREES AND BRUSH SHALL BE REMOVED AND DISPOSED OF OFF SITE.
5. NO BLASTING WILL BE ALLOWED.
6. ALL SURFACE DRAINAGE IMPACTED SHALL BE RESTORED TO AS GOOD OR BETTER CONDITION.
7. ALL DISTURBED AREAS SHALL BE LEFT FREE OF RUTS AND TRACKS AND SHALL BE FULLY GRADED TO DRAIN.

GRASSING

1. ANY AND ALL DISTURBED AREAS OUTSIDE OF PLANT FENCING SHALL BE TOPSOILED, HYDROMULCHED, AND WATERED UNTIL ESTABLISHED. ANY AND ALL DISTURBED AREAS INSIDE PLANT FENCING SHALL BE SOLID SLAB SODDED PER SPECIFICATIONS & WATERED UNTIL ESTABLISHED.
2. FOR PIPELINE CONSTRUCTION EXTERNAL TO THE TREATMENT PLANT, ANY AND ALL DISTURBED AREAS SHALL BE TOPSOILED, HYDROMULCHED, AND FERTILIZED, WITH THE EXCEPTION OF RESIDENTIAL YARDS WHICH SHALL RECEIVE SOLID SLAB SOD IN LIEU OF HYDROMULCHING PER SPECIFICATIONS. THIS WORK WILL NOT BE MEASURED FOR PAYMENT. COST SHALL BE INCLUDED IN THE PRICE BID FOR ASSOCIATED ITEMS OF WORK.

DUCTILE IRON PIPE & FITTINGS

1. ALL BURIED DUCTILE IRON PIPE AND FITTINGS SHALL BE PROTECTED IN ACCORDANCE WITH ANSI/AWWA C105/A21.5 "POLYETHYLENE ENCASEMENT FOR GRAY AND DUCTILE IRON PIPE FOR WATER AND OTHER LIQUIDS." THIS ITEM SHALL NOT BE MEASURED FOR PAYMENT AND SHALL BE INCLUDED IN THE PRICE BID FOR ASSOCIATED ITEMS OF WORK.
2. ALL DUCTILE IRON AIR PIPING SHALL BE UNLINED WITH EPDM GASKETS RATED FOR COMPRESSED AIR USAGE (PRESSURE & TEMPERATURE.)
3. ALL DUCTILE IRON PIPING SHALL BE RESTRAINED JOINT.
4. ALL DUCTILE IRON PIPE CONNECTIONS TO P.V.C. SHALL BE MADE WITH A BOLTED CAST TRANSITION COUPLING.
5. ALL EXPOSED FITTINGS SHALL BE FLANGED FITTINGS W/ XYLAN COATED BOLTS AND APPURTENANCES.
6. ALL MECHANICAL JOINT, FLANGE & MISC. FITTINGS TO HAVE XYLAN COATED BOLTS, NUTS & WASHERS.
7. ALL BURIED FITTINGS SHALL BE D.I. MECHANICAL JOINT (M.J) RESTRAINED (MEGALUG.)
8. WALL PIPES SHALL BE USED WHEREVER PIPING PASSES FROM A STRUCTURE TO EARTHEN BACKFILL.
9. PROVIDE 1/4" ANTI-SEEPAGE RINGS A MINIMUM OF 2" WIDE WELDED TO ALL PIPES PIERCING WATER HOLDING TANKS TO PREVENT SEEPAGE OF WATER BETWEEN PIPE AND CONCRETE. WALL PIPES MAY BE USED IN LIEU OF WELDED RINGS.
10. ALL DUCTILE IRON PIPING LARGER THAN 10" DIAMETER SHALL HAVE CONCRETE SUPPORTS UNLESS OTHERWISE DETAILED. SMALLER PIPING MAY HAVE METAL STAND TYPE SUPPORTS.

CONCRETE

1. CONSTRUCTION JOINTS TO FACILITATE CONSTRUCTION SHALL BE LOCATED AND DETAILED ON THE SHOP DRAWINGS FOR REVIEW. UNLESS INDICATED OTHERWISE, ALL CONSTRUCTION JOINTS SHALL BE KEYED. HORIZONTAL CONSTRUCTION JOINTS SHALL NOT BE PERMITTED IN WALLS AND BEAMS, UNLESS SHOWN ON THE DRAWINGS OR APPROVED BY THE ENGINEER.
2. ALL EXPOSED CORNERS OF CONCRETE STRUCTURES REGARDLESS OF LOCATION SHALL HAVE A 3/4 INCH MINIMUM CHAMFER.
3. ALL EXPOSED EXTERIOR CONCRETE SHALL BE COATED WITH THEROSEAL OR TNEMEC ENVIROCRETE (8MIL THICKNESS). SURFACE PREPARATION AND COATING TO BE PER MANUFACTURER'S REQUIREMENTS.
4. ALL GROUTED AREAS OVER 8" THICK SHALL BE REINFORCED WITH WELDED WIRE MESH, 6x6-W2.0xW2.0 MATTS AT 8'-0" CTRS MAX.
5. ANCHOR BOLTS NOT SPECIFIED BY ENGINEER SHALL BE DESIGNED AND STAMPED BY A REGISTERED PROFESSIONAL ENGINEER, RETAINED BY THE CONTRACTOR IN ACCORDANCE WITH APPLICABLE PROJECT AND CODE REQUIREMENTS. SUBMIT AS A SHOP DRAWING FOR REVIEW AND APPROVAL BY THE ENGINEER. COORDINATE LOCATION, SIZE AND EMBEDMENT PRIOR TO CASTING CONCRETE.
6. EXPANSION JOINTS SHALL BE USED WHERE EXTERIOR OF ALL EXISTING AND PROPOSED STRUCTURES AND BUILDINGS ABUT CONCRETE PAVING WHETHER SHOWN ON THE DRAWINGS OR NOT.
7. NO FLY ASH SHALL BE PERMITTED IN CONCRETE MIX DESIGN.
8. TREMIES REQUIRED ON ALL POURS DEEPER THAN 10 FEET.
9. VAPOR BARRIER (10 MIL) REQUIRED BENEATH ALL SLABS.
10. WALKWAYS AND SIDEWALKS SHALL BE POURED WITH SLIGHT SLOPE AND NO LOW SPOTS SO THEY WILL DRAIN FREELY.
11. ALL STRUCTURAL JOINTS SHALL RECEIVE 6" RUBBER CENTER BULB PVC WATERSTOP PLACED AT ALL WATERTIGHT JOINTS.
12. VERTICAL WATERSTOP SHALL BE FULLY EMBEDDED IN SLAB POUR AND WELDED TO ALL ADJACENT WATERSTOP.
13. WHEN WATERSTOP IS PLACED HORIZONTALLY IN SLABS, THE CONTRACTOR SHALL TEMPORARILY TIE UP OR STAND UP THE WATERSTOP UNTIL THE CONCRETE IS PLACED TO SLIGHTLY ABOVE THE DEPTH OF THE WATERSTOP.
14. ALL CONCRETE SHALL HAVE XYPEX ADMIXTURE PER MANUFACTURE'S SPECIFICATIONS.

BUILDING

1. ALL EXTERIOR DOORS ON ALL BUILDINGS SHALL HAVE R-PANEL AWNING SUPPLIED INTEGRAL WITH METAL BUILDING. AWNING ROOF PANELS SHALL MATCH MAIN BUILDING ROOF. AWNINGS SHALL INCLUDE FULL WIDTH GUTTER WITH DOWNSPOUTS.
2. ALL EXTERIOR EXPOSED CMU SHALL BE SPLIT FACE ARCHITECTURAL BLOCK UNLESS OTHERWISE NOTED.
3. ANY R-PANEL USED IN THE BUILDING CONSTRUCTION WHERE NO GAUGE IS SPECIFIED SHALL BE 24 GA. MINIMUM.

PIPING & APPURTENANCES

1. MANHOLES SHALL BE GROUTED INSIDE AND OUT AT ALL JOINTS.
2. ALL NON-POTABLE WATER LINES SHALL BE IN PURPLE COLORED PIPE AND LABELED "DO NOT DRINK". THE WARNING LABEL SHALL BE LOCATED ON OPPOSITE SIDES OF ALL PIPES AND REPEATED EVERY THREE (3) FEET OR LESS.
3. ALL PIPING THAT CROSS VERTICALLY SHALL HAVE AT LEAST 6" SEPARATION.
4. ALL UNDERGROUND FITTINGS SHALL BE DUCTILE IRON MECHANICAL JOINTS (MEGALUG), UNLESS OTHERWISE NOTED.
5. ALL VALVE ASSEMBLIES, VAULTS, PULLS BOXES AND MANHOLES CONSTRUCTED SHALL BE ADJUSTED TO BE FLUSH WITH FINISHED GRADE UNLESS OTHERWISE NOTED. MANHOLES SET IN OPEN FIELDS SHALL BE SET TWELVE INCHES ABOVE FINISHED GRADE AND VAULTS SHALL BE SET 6 INCHES ABOUT FINISHED GRADE.
6. ALL VALVE ASSEMBLIES, VAULTS, PULLS BOXES AND MANHOLES CONSTRUCTED SHALL BE ADJUSTED TO BE FLUSH WITH FINISHED GRADE UNLESS OTHERWISE NOTED.
7. ANY BY-PASS PUMPING AND/OR BY-PASS PIPING INSTALLED SHALL BE OPERATED AND MAINTAINED BY THE CONTRACTOR AT CONTRACTOR'S EXPENSE. THE CONTRACTOR IS RESPONSIBLE FOR ANY UNAUTHORIZED DISCHARGES.
8. CONNECTIONS TO EXISTING UTILITIES SHALL BE MADE IN A TIME AND UNDER CONDITIONS WHICH WILL LEAST INTERFERE WITH SERVICE OF THE OWNER, AND AS AUTHORIZED BY THE ENGINEER AND OWNER. FACILITIES SHALL BE PROVIDED FOR PROPER DEWATERING AND FOR DISPOSAL OF ALL WATER/WASTEWATER REMOVED TO ADJACENT PROPERTY FROM DEWATERED LINES WITHOUT DAMAGE.
9. MAINTAIN THE REQUIRED 10 FOOT HORIZONTAL AND 2 FOOT VERTICAL SEPARATION BETWEEN SANITARY SEWER AND POTABLE WATER MAINS. ALL OTHER PIPING SHALL MAINTAIN A MINIMUM OF 5' SEPARATION.
10. ORDER MANHOLES IN PAVEMENT LOWER THAN PROPOSED GRADE AND BRING THEM TO EXACT GRADE WITH LEVEL RINGS.
11. PROVIDE FREEZE PROTECTION FOR ANY EXPOSED PIPING. FREEZE PROTECTION SHALL CONSIST OF WRAPPED PIPE W/ RIGID ALUMINUM COVERS. FREEZE PROTECTION/INSULATION WILL NOT BE REQUIRED FOR PIPING INSIDE BUILDING, AIR PIPING OR SCADA INSTRUMENTATION CONDUIT.
12. CONTRACTOR SHALL SCHEDULE AND CONDUCT OPERATIONS TO LIMIT AMOUNT OF TRENCH OPENED TO INCLUDE ONLY THAT WHICH MAY BE COVERED IN 2 (TWO) DAYS TIME TO A MAXIMUM OF 200'. ANY TRENCH LEFT OPEN OVERNIGHT SHALL BE BARRICADED AND PROTECTED AS DETAILED IN THE MOST CURRENT EDITION OF THE MANUAL OF UNIFORM TRAFFIC CONTROL DEVICES.
13. SEWER MAINS SHALL BE CONSTRUCTED UTILIZING A LASER WITH GRADE ESTABLISHED THROUGH SEWER PIPE.
14. WHEN TIE-INS TO EXISTING MANHOLES ARE TO BE MADE, CONTRACTOR SHALL VERIFY MANHOLE FLOW LINE AT AN INTERVAL PRIOR TO MANHOLE TO ENSURE ADEQUATE DEPTH OF NEW LINE. WHEN CONSTRUCTING A MANHOLE OVER AN EXISTING LINE, CONTRACTOR SHALL VERIFY EXISTING LINE DEPTHS PRIOR TO MANHOLE CONSTRUCTION.
15. MATERIAL EXCAVATED FROM TRENCH & PIPE BEDDING MATERIALS SHALL NOT BE PLACED ON ADJACENT ASPHALT OR CONCRETE PAVING.
16. A SILT AND VARMINT CAP AND/OR PLUG SHALL BE IN PLACE ON THE OPEN END OF PIPES AT ALL TIMES.
17. DO NOT EXCEED 75% OF MANUFACTURE'S RECOMMENDED MAXIMUM DEFLECTION FOR PIPE JOINTS UNLESS OTHERWISE NOTED.
18. INSTALL TEMPORARY FENCES TO PROTECT HORSES AND LIVESTOCK WHEN NECESSARY.
19. REMOVAL AND REPLACEMENT OF STREET TRAFFIC SIGNS, MAIL BOXES AND OTHER STRUCTURES BY THE CONTRACTOR TO FACILITATE CONSTRUCTION SHALL BE CONSIDERED INCIDENTAL AND BE INCLUDED IN THE PRICE BID.
20. ALL EXISTING PAYMENT TO REMAIN SHALL BE SAWCUT TO ENSURE A STRAIGHT SMOOTH SURFACE. ALL CUTS MADE IN DRIVEWAYS OR OTHER PAVEMENTS SHALL BE MADE IN STRAIGHT PERPENDICULAR LINES. COST TO BE CONSIDERED SUBSIDIARY TO CONTRACTOR'S BID.
21. INSTALL METAL TRACER WIRE AND TAPE ON ALL PIPING INSTALLED IN ACCORDANCE WITH SPECIFICATIONS.



TREATMENT PLANT

1. ALL EXPOSED COMPONENTS REGARDLESS OF LOCATION TO BE CORROSION RESISTANT (GALVANIZED, ALUMINUM, SST, FRP, ETC).
2. PROPERLY INSULATE, GASKET AND PROTECT TRANSITIONS TO DISSIMILAR METALS (DUCTILE-STAINLESS).
3. ALL EXPOSED VALVES SHALL HAVE HANDWHEELS OR LEVERS. CHAINWHEELS TO BE PROVIDED ON ALL ELEVATED VALVING.
4. ALL PLANT PIPING, CONDUIT, DRAINS, EQUIPMENT, PIPING, ELECTRICAL, COMPONENTS, ETC., SHALL BE PROVIDED WITH PIPE AND EQUIPMENT SUPPORTS. PIPE AND EQUIPMENT HANGERS FOR ALL BRACING AND STABILIZATION FOR A COMPLETE SYSTEM AND PROVIDE WALKING ACCESS AREAS FREE AND CLEAR. ALL PIPE SHALL BE PROPERLY PAINTED OR COATED WITH APPROVED PAINT. CONTRACTOR SHALL LABEL UNITS, PIPING, VALVES, TANKS, ETC., WITH PROPER FLOW DIRECTION AND TYPE. LOCATION AND NUMBER OF PIPE HANGERS AND PIPE SUPPORTS SHOWN IN ONLY APPROX. CONTRACTOR SHALL DESIGN SUPPORTS AS SPECIFIED.
5. ALL PVC/CPVC VALVES AND COMPONENTS FOR USE IN CHEMICAL FEED AND AIR PIPING SHALL HAVE VITON SEALS AND SHALL BE RATED FOR PRODUCT BEING CARRIED.
6. ALL SUSPENDED PIPING SHALL BE SUPPORTED AT NOT LESS THAN EVERY 10 FEET. ALL PIPING LARGER THAN 6" DIAMETER MAY REQUIRE ADDITIONAL SUPPORTS PER SUPPORT SUPPLIERS RECOMMENDATIONS AND/OR SPECIFICATION REQUIREMENTS.
7. ALL WATERTIGHT STRUCTURES CONCRETE SHALL HAVE 72 HOUR WATER TEST FOR LEAKAGE ON STRUCTURE BEFORE BACKFILL.
8. DISSIMILAR METALS IN CONTACT SHALL BE PROVIDED WITH GALVANIC SEPARATION.
9. CONTRACTOR TO COORDINATE WITH SUPPLIERS AND PROVIDE DRAIN CONDUIT (2" MINIMUM) FOR ANY/ALL ANALYZERS, RPZ, AIR/VAC VALVES, SAMPLERS OR ANY OTHER ITEM INSIDE BUILDING WHICH DISCHARGES INTERMITTENT WATER AND ROUTE TO DRAIN. NO SURFACE DRAINAGE WILL BE PERMITTED.
10. SUPPLY ONE SPARE WASHWATER PUMP.
11. SUBMIT FOR REVIEW ALL EQUIPMENT SIZES, OPERATING WEIGHTS, VIBRATION FORCES, SUPPORT LOCATIONS, ALONG WITH ANY FLOOR OPENINGS, NOTCHES, AND RECESSES REQUIRED BY SUCH EQUIPMENT. CONCRETE SUPPORT PADS AND/OR FRAMING REQUIRED TO SUPPORT SAID EQUIPMENT SHALL NOT BE FABRICATED AND PLACED UNTIL THE CONCRETE SUPPORT PADS AND/OR FRAMING IS APPROVED TO SUPPORT THE EQUIPMENT.
12. PROCESS EQUIPMENT DELIVERIES SHALL BE COORDINATED SO THAT EQUIPMENT COMES TO SITE NO MORE THAN 30 DAYS PRIOR TO INSTALLATION, UNLESS STORED INDOORS WITH CLIMATE CONTROL.
13. AT ALL POINTS UNDERGROUND WHERE PIPING EXITS STRUCTURES AND TRANSITIONS TO NATURAL GROUND OR OTHER AREAS SUBJECT TO GROUND SETTLING OR OTHER POTENTIAL INTRODUCED STRESSES AFTER INSTALLATION, A BELL-FLANGE WALL PIPE W/SEEP RING AND RESTRAINED MECHANICAL JOINT SHALL BE PROVIDED TO ALLOW FOR DEFLECTION WHETHER BEING SHOWN ON DRAWINGS OR NOT.
14. ALL PIPING 18" AND LARGER SHALL HAVE A MINIMUM COVER OF 48"; AND PIPE SMALLER THAN 18" SHALL HAVE A MINIMUM COVER OF 36" UNLESS OTHERWISE NOTED. PIPE SHALL BE ROUTED AS SHOWN UNLESS MINOR REVISIONS ARE NECESSARY TO AVOID EXISTING PIPES, STRUCTURES, ETC. CONTRACTOR SHALL BE RESPONSIBLE FOR FURNISHING ALL FITTINGS AND ADAPTERS REQUIRED TO MAKE THE ROUTING CHANGES. CONTRACTOR SHALL INCLUDE COST IN PRICE BID.
15. WHERE CONFLICTS OCCUR BETWEEN CIVIL AND MEP DRAWINGS SHALL GOVERN. ELECTRICAL CONTRACTOR IS RESPONSIBLE FOR VERIFICATION AND ANY MINOR MODIFICATIONS REQUIRED TO FACILITATE INSTALLATION AS OUTLINED ON CIVIL DRAWINGS.
16. REVIEW OF ANY/ALL SCOPE AND PROPOSALS FURNISHED BY EQUIPMENT SUPPLIERS AND SHALL VERIFY ALL REQUIREMENTS OUTLINED IN PROPOSED EQUIPMENT SCOPE/PROPOSAL HAVE VERIFIED AGAINST THE DRAWINGS PRIOR TO BID. ANY ADJUSTMENTS AND/OR ADDITIONAL WORK/MATERIALS REQUIRED ARE THE RESPONSIBILITY OF THE CONTRACTOR AND NO ADDITIONAL COMPENSATION WILL BE PROVIDED.
17. MAKE CONNECTIONS TO EXISTING PIPE, EQUIPMENT, ETC. AS REQUIRED AND SHALL PROVIDE ALL FITTINGS, ADAPTERS AND APPURTENANCES REQUIRED TO MAKE THE CONNECTIONS. PROVIDE SUPPORTS REQUIRED FOR A RIGIDLY SUPPORTED SYSTEM.
18. TEMPORARILY RELOCATE PIPING AS REQUIRED TO MAINTAIN SERVICE TO THE EXISTING PLANT.
19. MECHANICAL AND ELECTRICAL EQUIPMENT SUPPORTS, ANCHORAGES, OPENINGS, RECESSES, AND REVEALS NOT SHOWN ON THE STRUCTURAL DRAWINGS THAT ARE REQUIRED BY OTHER CONTRACT DRAWINGS SHALL BE PROVIDED PRIOR TO CASTING CONCRETE.
20. PRIOR TO FABRICATION OF NEW PIPING, INCLUDING SPECIAL FITTINGS AND EXCAVATIONS FOR NEW STRUCTURES, ELECTRICAL CONDUIT AND/OR OTHER PROPOSED UTILITIES, CONTRACTOR SHALL BE RESPONSIBLE TO VERIFY/TIME THE LOCATION OF ALL EXISTING PIPING AND UTILITIES IN THE CONSTRUCTION AREA. AT TIE-IN LOCATIONS, VERIFY THE SIZING OF EXISTING PIPING BEFORE FABRICATION OF NEW PIPING AND FITTINGS. THE CONTRACTOR SHALL INCLUDE THE COST IN HIS BID FOR TEMPORARILY RELOCATING AND REINSTALLING EXISTING UTILITIES AS REQUIRED FOR CONSTRUCTION OF PROPOSED ITEMS.
21. ANY PLANT UTILITY, PIPING, CONDUIT, COMMUNICATION SYSTEM, ELECTRICAL OR INSTRUMENTATION WIRING DAMAGED DURING CONSTRUCTION SHALL BE REPAIRED AND PLACED BACK IN SERVICE BY THE CONTRACTOR ON THE SAME DAY THAT THE DAMAGE OCCURRED. AFTER 24 HOURS OUT OF SERVICE, OWNER WILL HAVE THE OPTION OF HAVING THE REPAIRS MADE BY A SEPARATE CONTRACTOR AND DEDUCTING THE COST OF SAID REPAIRS FROM THE CONTRACT AMOUNT.
22. GALVANIZED STEEL PRODUCTS SHALL NOT BE USED FOR ANY TREATMENT PLANT STRUCTURE / EQUIPMENT CONSTRUCTION UNLESS SPECIFICALLY CALLED OUT / APPROVED.
23. ALL NEW UNISTRUT, ANCHORS, SUPPORT SYSTEMS AND FASTENING HARDWARE TO BE 316 STAINLESS STEEL.
24. BACKFILLING AGAINST STRUCTURES WHICH HAVE A TOP SLAB SHALL BE DONE ONLY AFTER THE TOP SLAB IS IN PLACE AND THE CONCRETE HAS CURED TO 2/3 OF ITS DESIGN STRENGTH, BUT IN NO CASE LESS THAT 4 DAYS.
25. STAGING AREA WILL ONLY BE USED FOR CONSTRUCTION EQUIPMENT AND MATERIALS USED IN THE CONSTRUCTION OF THE PROJECT. CONSTRUCTION DEBRIS SHOULD NOT BE ALLOWED TO ACCUMULATE AND SHOULD BE REMOVED ON A WEEKLY BASIS.
26. INSTALL METAL TRACER WIRE AND COLOR CODE FOR ALL PIPE INSTALLED.
27. IN ACCORDANCE WITH OAC 252:656-5-4(G)(1), SANITARY SEWER MUST BE AT LEAST 10-FEET FROM AN EXISTING OR PROPOSED WATERMAIN AND AT LEAST 5-FEET ELECTRICAL OR PETROLEUM LINES. SANITARY SEWERS MUST CROSS AT LEAST 24 INCHES ABOVE OR BELOW WATERMAINS.
28. THE CONTRACTOR SHALL NOT OPEN OR CLOSE ANY VALVES AT THE TREATMENT PLANT AND SHALL ASK FOR THE OWNER'S ASSISTANCE.

ELECTRICAL/CONTROLS/SCADA

1. ALL ELECTRICAL CONSTRUCTION SHALL BE IN STRICT ACCORDANCE WITH ALL N.E.C. AND LOCAL ELECTRICAL CODES.
2. ALL MECHANICAL EQUIPMENT (INCLUDING MCC & PANELS) SHALL RECEIVE HOUSEKEEPING PADS WITH #4 BARS @ 12" O.C.E.W. MINIMUM THICKNESS SHALL BE 6" OR AS REQUIRED FOR ANCHOR BOLT CLEARANCE. ANCHOR BOLTS SLEEVES MAY BE USED PROVIDED THE SLEEVES ARE NON-SHRINK GROUT FILLED WITH 1-1/2" GROUT UNDER EQUIPMENT BASE. ALL PADS SHALL BE ANCHORED TO CONCRETE SLABS WITH J BARS (#3 @ 12" O.C.) OR EPOXY ANCHORS.
3. ALL SCADA SYSTEM WIRING SHALL BE CONDUIT ENCASED AND IS NOT SHOW FOR CLARITY. CONTRACTOR TO PROVIDE PROPOSED CONDUIT LAYOUT WITH SCHEDULE TO ENGINEER FOR APPROVAL PRIOR TO CONSTRUCTION.
4. ALL SURFACE MOUNTED PANELS AND PANEL BOARDS ON THE INTERIOR OF EXTERIOR WALLS OR IN OTHER LOCATIONS CONSIDERED DAMP OR WET AND SHALL BE MOUNTED SO AS TO MAINTAIN A 1/4" MINIMUM AIR SPACE BETWEEN THE ENCLOSURE AND THE WALL.
5. ALL EXTERNAL DISPLAYS SHALL BE PROVIDED WITH A WEATHER SHIELD.
6. REVIEW OF ANY/ALL SCOPE AND PROPOSALS FURNISHED BY EQUIPMENT SUPPLIERS AND SHALL VERIFY ALL ELECTRICAL REQUIREMENTS OUTLINED IN PROPOSED EQUIPMENT SCOPE/PROPOSAL HAVE BEEN ACCOMMODATED BY ELECTRICAL CONTRACTOR.
7. THE WIRING DIAGRAMS, QUANTITY AND SIZE OF WIRES AND CONDUITS REPRESENT A SUGGESTED ARRANGEMENT BASED UPON SELECTED STANDARD COMPONENTS OF ELECTRICAL EQUIPMENT. IF EQUIPMENT SUPPLIED BY THE MANUFACTURER HAS A LARGER LOAD THAN THE VALUE SHOWN OR INDICATED, THE CABLE, CONDUIT AND ELECTRICAL EQUIPMENT SHALL BE ENLARGED AS REQUIRED TO ACCOMMODATE THE HIGHER LOADING. HOWEVER, THE BASIC SEQUENCE AND METHOD OF CONTROL MUST BE MAINTAINED AS INDICATED ON THE DRAWINGS AND/OR SPECIFICATIONS. CONTRACTOR TO PROVIDE PROPOSED CONDUIT LAYOUT WITH SCHEDULE TO ENGINEER FOR APPROVAL PRIOR TO CONSTRUCTION.

WALL ENGINEERING
223 N. WASHINGTON, DURANT, OK 74701
OKLAHOMA CA #5413 EXP. JUNE 30, 2023

SUBMITTAL / REVISIONS:

	DATE	BY
SUBMITTAL / REVISION: ISSUED FOR BIDDING	06/22	TL

SHAWNEE MUNICIPAL AUTHORITY
SOUTHSIDE IMPROVEMENTS
SHAWNEE, OKLAHOMA

GENERAL CONSTRUCTION NOTES

PROJECT NO.
SHN-20-01

DATE
06/22

DRAWN BY:
TL

CHECKED BY:
JR

REVIEWED BY:
DBW

SCALE:
NOT TO SCALE

BAR IS ONE INCH ON ORIGINAL DRAWING
0" 1"
IF NOT ONE INCH ON THIS SHEET, ADJUST SCALES ACCORDINGLY

SHEET
C-1

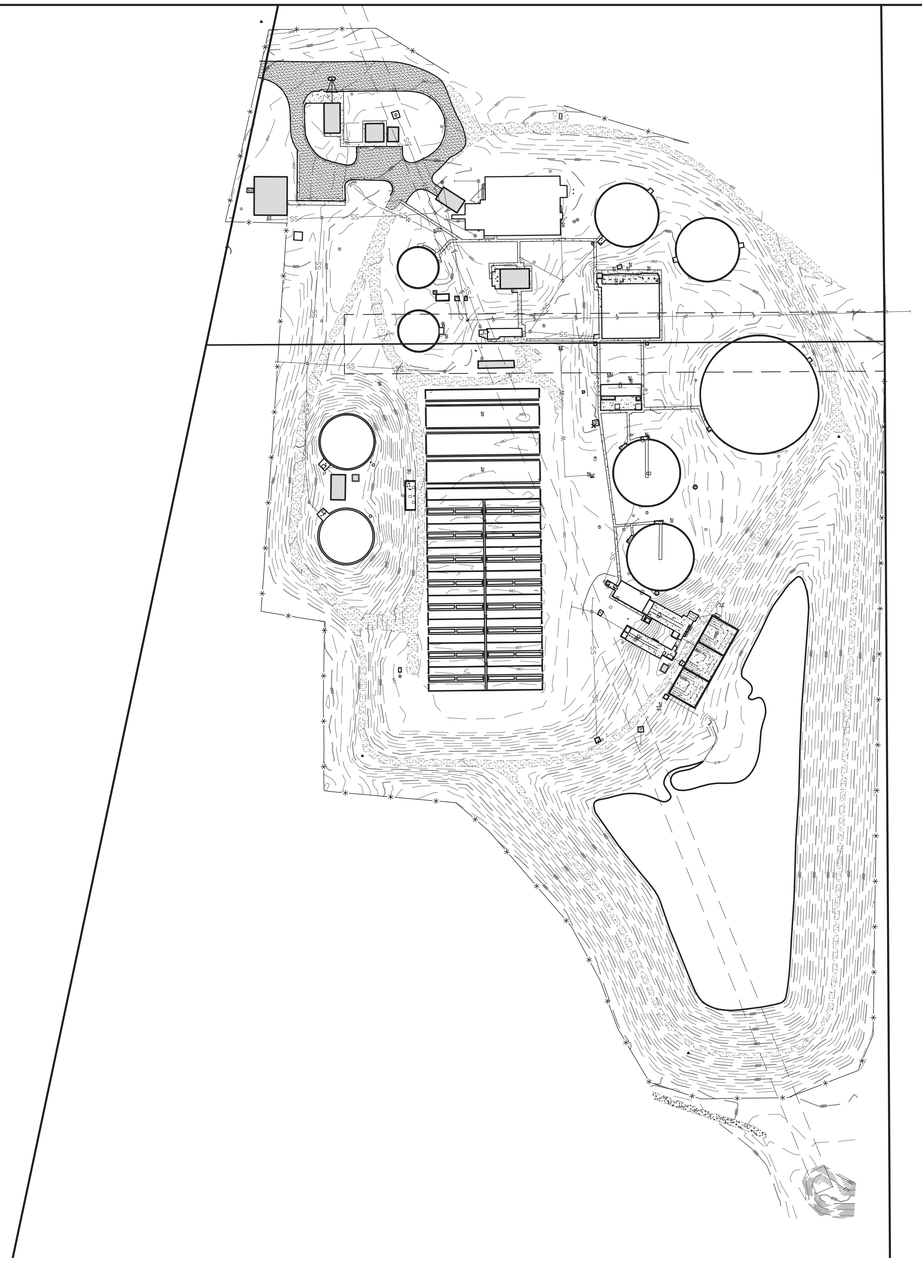

SURVEY CONTROL

POINT NUMBER	NORTHING	EASTING	ELEVATION	DESCRIPTION
100	724459.634	2292351.236	999.211	#4 Bar W/LLS CAP
101	723998.8926	2292992.448	992.34	#4 Bar W/LLS CAP
102	723314.2857	2292825.527	991.02	#4 Bar W/LLS CAP
103	723644.3712	2292463.504	991.78	#4 Bar W/LLS CAP
104	724010.7274	2292720.077	985.86	CUT X
HORIZONTAL AND VERTICAL DATUM BASED ON OPUS CONTROL POINTS				
HORIZONTAL DATUM: NAD83 (2011), OKLAHOMA STATE PLANE SOUTH				
VERTICAL DATUM: NAVD88				

TOPOGRAPHIC LEGEND

- AC — AIR CONDITIONER UNIT
- FIRE HYDRANT
- GAS METER
- GAS VALVE
- TRA — GROUND TRANSFORMER
- GUARD POST
- LIGHT POLE
- STORM DRAIN MANHOLE
- SANITARY SEWER MANHOLE
- TRANSFORMER POLE
- POWER POLE
- GUY POLE
- DOWN GUY
- SANITARY SEWER CLEANOUT
- SIGN
- TRAFFIC/ELECTRIC PULL BOX
- WATER METER
- WV — WATER VALVE BOX
- ELECTRIC RISER
- EM — ELECTRIC METER
- HB — HOSE BIB
- WV — WATER VENT
- "TD" TOTAL DEPTH
- EV — ELECTRIC VAULT
- TELEPHONE RISER

- —o— CHAINLINK FENCE
- —B— PIPERAIL FENCE
- —*— SECURITY FENCE
- —EUG— ELECTRIC UNDERGROUND LINE
- —h— OVERHEAD ELECTRIC LINE
- —G— GAS LINE
- —SS— SANITARY SEWER LINE
- STORM DRAIN LINE
- —TUG— UNDERGROUND TELEPHONE LINE
- —FO— UNDERGROUND FIBER OPTIC LINE
- —W— WATER LINE
- —994— GROUND SURFACE CONTOUR
- CURB AND GUTTER
- SURFACE DRAINAGE FLOWLINE
- X 993.5 SPOT ELEVATION
- CONCRETE
- ASPHALT
- GRAVEL
- 985.78 TOP OF WALL
- 978.57 CHANNEL
- 979.64 WEIR WALL

"HARD SURVEY LOCATIONS" REQUESTS:
All information was collected as shown in the drawings excepting:
– Existing Plant Headworks ~ Could not determine size and material of some piping.
– Chlorine Contact Basin ~ Could not determine size and material of piping.
– Treated Flow and Wet Weather Flow Screw Pumps ~ Could not determine size and material of piping.

NOTICE:
All invert elevation, pipe size, and pipe material information was collected in unfavorable conditions. This information was difficult to obtain with absolute certainty of its accuracy.

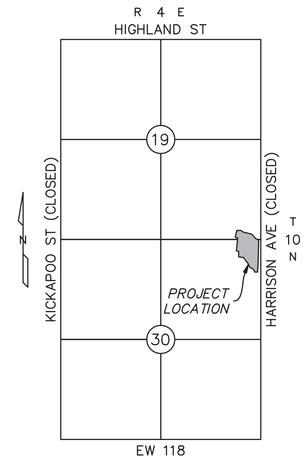

LOCATION MAP



UTILITY WARNING:
The underground utilities shown have been located from record documents or field locations by the operator. The surveyor makes no guarantee that the underground utilities shown comprise all such utilities in the area either in service or abandoned. The surveyor further does not warrant that the underground utilities shown are in the exact location indicated although the surveyor does certify that they are located as accurately as possible from the information available. The surveyor has not physically located the underground utilities.

Utility elevations and sizes may have been measured under adverse field conditions. Upon exposing the utility, elevations and line sizes should be verified by the contractor prior to construction. Contractor should verify critical elevations using the benchmark provided by the surveyor or engineer. Any discrepancies should be immediately brought to the engineer's and surveyor's attention.

OKIE Ticket #17080911511728

UTILITIES NOTIFIED:

ONG West OK
AT&T Distrabution
Xtreme Energy
OG&E Shawnee
The City of Shawnee

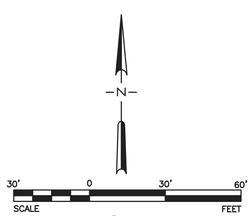

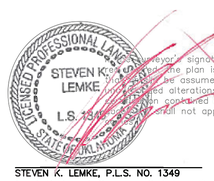

STEVEN K. LEMKE, P.L.S. NO. 1349
DATED: 10-11-2017
Last Date of Survey: October 5, 2017

A surveyor's signature is not valid unless the plan is a copy bearing the surveyor's seal. It should not be assumed to contain all updated information, or that any information contained on this survey will not apply to any

LEMKE LAND SURVEYING, LLC
3226 BART CONNER DRIVE, NORMAN, OK 73072
PH:(405)366-8541 FAX:(405)366-8540
CA # 8975
http://www.lemke-ls.com

Mark	Description	Date	Appr.

Project: TOPGRAPHIC SURVEY FOR SHAWNEE SOUTHSIDE WASTEWATER TREATMENT PLANT
Project Location: 800 E DUNBAR STREET SHAWNEE, OK
Client: GUERNSEY OKLAHOMA CITY, OK

Surveyed By:	SA/EY/CG/GT
Drawn By:	SA
Approved By:	SKL
Date:	10/09/2017
Scale:	1" = 30'
Project No:	17074.300

Sheet Number 1
Sheet 1 of 3

G:\Projects\17074\LLS-Data\Submitted\DS_Shawnee South WWTP-SA_20090.00.dwg 10/11/2017 2:55:35 PM

G:\Projects\17074\LLS-Data\Submitted\DS_Shawnee South WWTP-SA_2009LDD.dwg 10/11/2017 2:56:32 PM

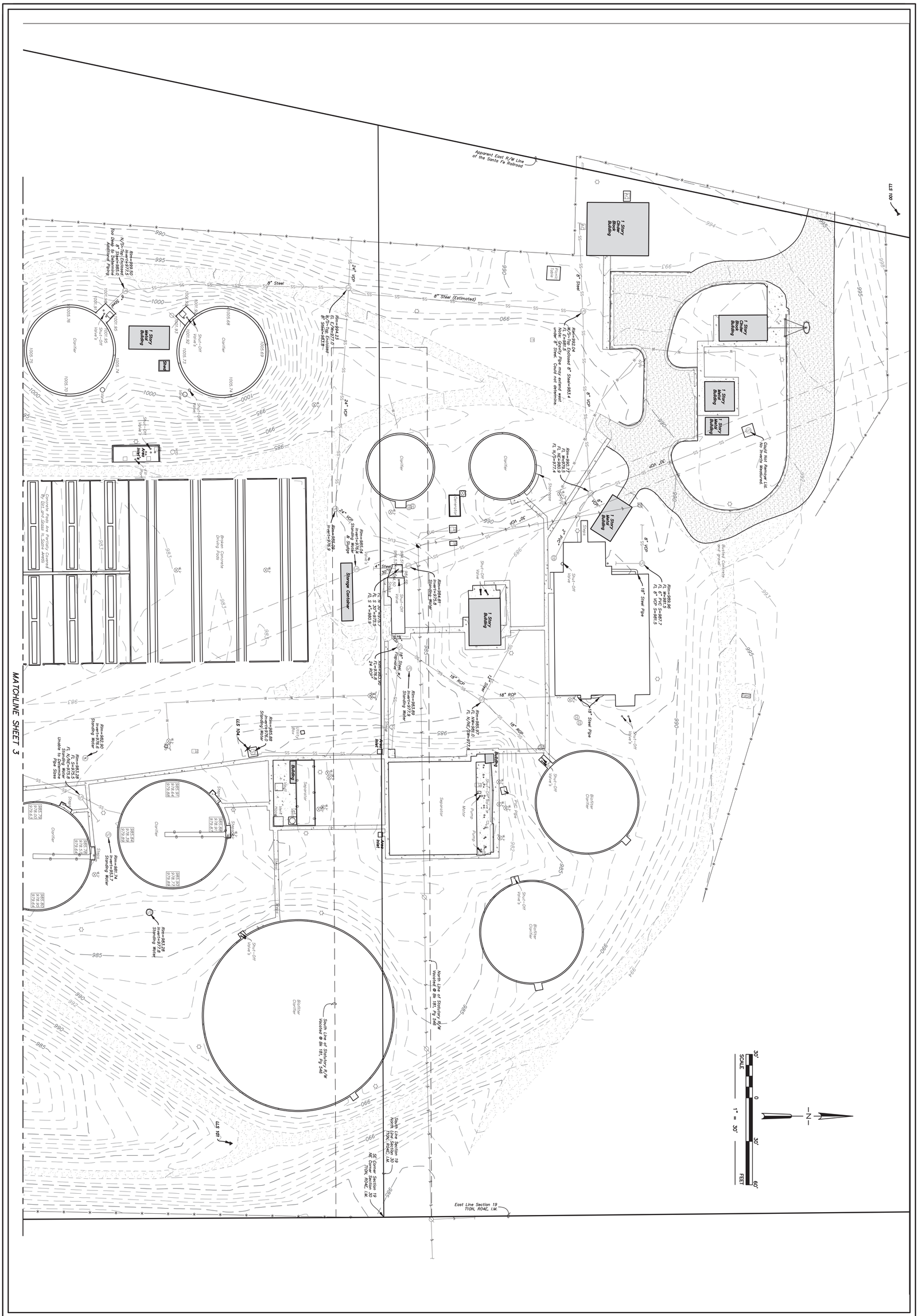

Sheet Number 2	Project: TOPGRAPHIC SURVEY FOR SHAWNEE SOUTHSIDE WASTEWATER TREATMENT PLANT	Surveyed By: SA/EY/CG/GT	
	Project Location: 800 E DUNBAR STREET SHAWNEE, OK	Drawn By: SA	
		Approved By: SKL	
		Date: 10/09/2017	
	Client: GUERNSEY OKLAHOMA CITY, OK	Scale: 1" = 30'	
Sheet 2 of 3		Project No: 17074.300	

Mark	Description	Date	Appr.

LEMKE LAND SURVEYING, LLC
3226 BART CONNER DRIVE, NORMAN, OK 73072
PH.(405)366-8541 FAX(405)366-8540
CA # 6975
http://www.lemke-ls.com

MATCHLINE SHEET 2

Rim=981.82
FL SE=974.7
FL NE=975.7
Standing Water
Unable to Determine
Pipe Sizes

FL=979.63
24" Steel Drain
FL=980.03
(Silted)

985.79
978.46

Vault

Shut-Off Valve

Utility Box

Grate=979.91
Invert=972.7

TG=981.84
FL=973.4
Under Water

TG=981.82
FL=973.48

18" RCP

24" RCP

Rim=983.43
FL N/S=974.5
FL E/W=975.3
Standing Water

Shut-Off Valve

TG=997.66
FL=974.24
Under Water
TG=997.62
FL=973.62

Shut-Off Valve

18" RCP

Inverted=983.26
Standing Water

Vault

TG=981.66
FL=973.45

TG=981.63
FL=973.46

24" Steel
FL=989.95

24" RCP

Under Water

TG=997.79
FL=992.63

TG=997.72
FL=992.91

Grate

TG=993.74
Invert=982.17
FL NW 24" RCP
=989.49
FL SE 18" Steel
=989.85

Discharge Pipe

18" RCP

18" RCP

TG=993.18
FL SE=978.1
FL NE=988.2

Structure Under Water
on Date of Pipe Measurements

TG=992.71
Invert=975.4
Standing Water

Shut-Off Valve

18" RCP

24" RCP

Rim=990.56
FL S=967.5
FL NE=966.6

Ignition Control Panel

Flare

LLS 103

Detention Pond

Edge of Water on Date of Survey

East Line Section 30
11ON, R4NE, I.M.

Omitted in 1998 at Bk 37 Pg 482, Bk 37 Pg 483, and Bk 37 Pg 489

Possible Location of 20' Sanitary Sewer Easement

LLS 102

MATCHLINE "B"

MATCHLINE "B"

Outlet Structure
Not Measured

N

30' 0 30' 60'
SCALE FEET
1" = 30'

LEMKE LAND SURVEYING, LLC
3226 BART CONNER DRIVE, NORMAN, OK 73072
PH:(405)366-8540 FAX:(405)366-8541 CA # 8975
http://www.lemke-llc.com

Mark	Description	Date	Appr.

Surveyed By:	SA/EY/CG/GT
Drawn By:	SA
Approved By:	SKL
Date:	10/09/2017
Scale:	1" = 30'
Project No:	17074.300

Project:
TOPGRAPHIC SURVEY FOR
SHAWNEE SOUTHSIDE WASTEWATER TREATMENT PLANT

Project Location:
800 E DUNBAR STREET
SHAWNEE, OK

Client:
GUERNSEY
OKLAHOMA CITY, OK

Sheet Number
3
Sheet 3 of 3

G:\Projects\17074\LLS-Data\Submitted\DS_Shawnee South WWTP-SA_20090200.dwg 10/11/2017 2:57:33 PM

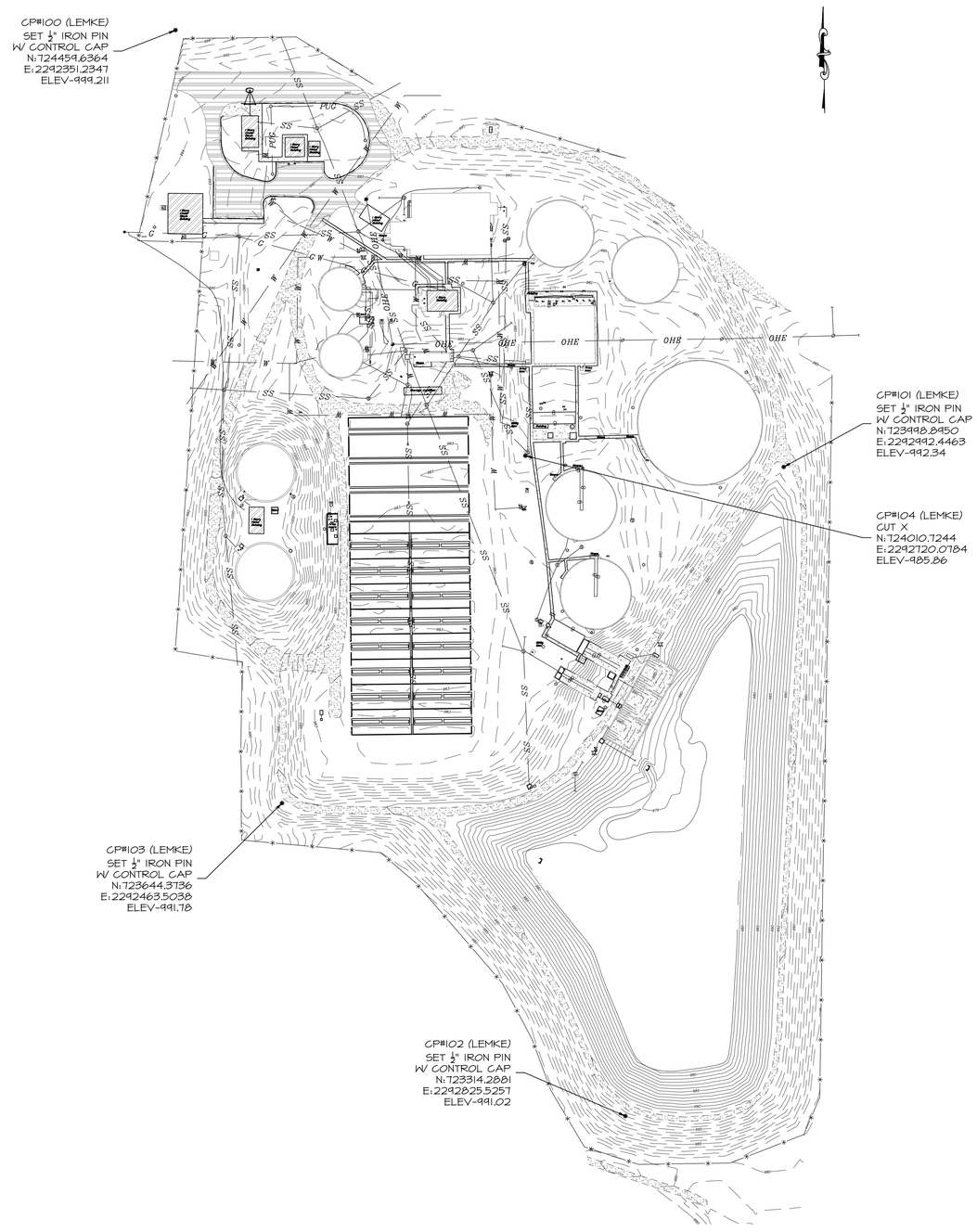

SURVEY CONTROL

POINT NUMBER	NORTHING	EASTING	ELEVATION	DESCRIPTION
100	724459.6364	2292351.2347	999.21	#4 BAR W/LLS CAP
101	723998.8926	2292492.448	992.34	#4 BAR W/LLS CAP
102	723314.2857	2292825.527	991.02	#4 BAR W/LLS CAP
103	723644.3712	2292463.504	991.78	#4 BAR W/LLS CAP
104	724010.7274	2292720.077	985.86	CUT X
HORIZONTAL AND VERTICAL DATUM BASED ON OPUS CONTROL POINTS				
HORIZONTAL DATUM: NAD83 (2011), OKLAHOMA STATE PLANE SOUTH				
VERTICAL DATUM: NAVD88				
SURVEY CONTROL ESTABLISHED BY LEMKE LAND SURVEYING				

TOPOGRAPHIC LEGEND

- AIR CONDITIONER UNIT
- FIRE HYDRANT
- GAS METER
- GAS VALVE
- GROUND TRANSFORMER
- GUARD POST
- LIGHT POLE
- STORM DRAIN MANHOLE
- SANITARY SEWER MANHOLE
- TRANSFORMER POLE
- POWER POLE
- GUY POLE
- DOWN GUY
- SANITARY SEWER CLEANOUT
- SIGN
- TRAFFIC/ELECTRIC PULL BOX
- WATER METER
- WATER VALVE BOX
- ELECTRIC RISER
- ELECTRIC METER
- HOSE BIB
- WATER VENT
- "TD" TOTAL DEPTH
- ELECTRIC VAULT
- TELEPHONE RISER
- CONTROL POINT
- VALVE

- CHAINLINK FENCE
- PIPERAIL FENCE
- SECURITY FENCE
- PUG — ELECTRIC UNDERGROUND LINE
- OHE — OVERHEAD ELECTRIC LINE
- G — GAS LINE
- SS — SANITARY SEWER LINE
- STORM DRAIN LINE
- TUG — UNDERGROUND TELEPHONE LINE
- FO — UNDERGROUND FIBER OPTIC LINE
- W — WATER LINE
- 994 — GROUND SURFACE CONTOUR
- CURB AND GUTTER
- SURFACE DRAINAGE FLOWLINE
- SPOT ELEVATION
- CONCRETE
- ASPHALT
- GRAVEL
- TOP OF WALL
- CHANNEL
- WEIR WALL

985.78
978.57
979.64

NOTES:

1. SURVEY & CONTROL DATA SHOWN ON THIS SHEET WAS PROVIDED BY LEMKE LAND SURVEYING. COORDINATE WITH AN RPLS TO VERIFY/CHECK CONTROL POINTS AND LEVEL-LOOP PRIOR TO CONSTRUCTION. SHOULD ANY ISSUES ARISE, COORDINATE WITH LEMKE LAND SURVEYING.

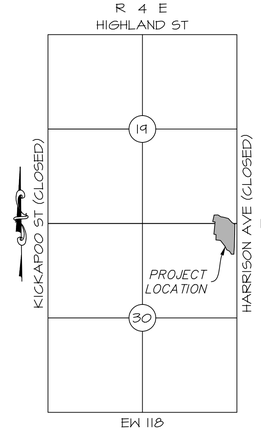

LOCATION MAP



WALL ENGINEERING

223 N. WASHINGTON, DURANT, OK 74701
OKLAHOMA CA #5413 EXP. JUNE 30, 2023

SUBMITTAL / REVISIONS:

DATE	BY	SUBMITTAL / REVISION
06/22	TL	ISSUED FOR BIDDING

SHAWNEE MUNICIPAL AUTHORITY
SOUTHSIDE IMPROVEMENTS
SHAWNEE, OKLAHOMA

SURVEY DATA SHEET/CONTROL

PROJECT NO.
SHN-20-01

DATE
06/22

DRAWN BY:
TL

CHECKED BY:
BW

REVIEWED BY:
DBW

SCALE:
1"=70'

BAR IS ONE INCH ON ORIGINAL DRAWING
0" 1"
IF NOT ONE INCH ON THIS SHEET, ADJUST SCALES ACCORDINGLY

SHEET

C-3

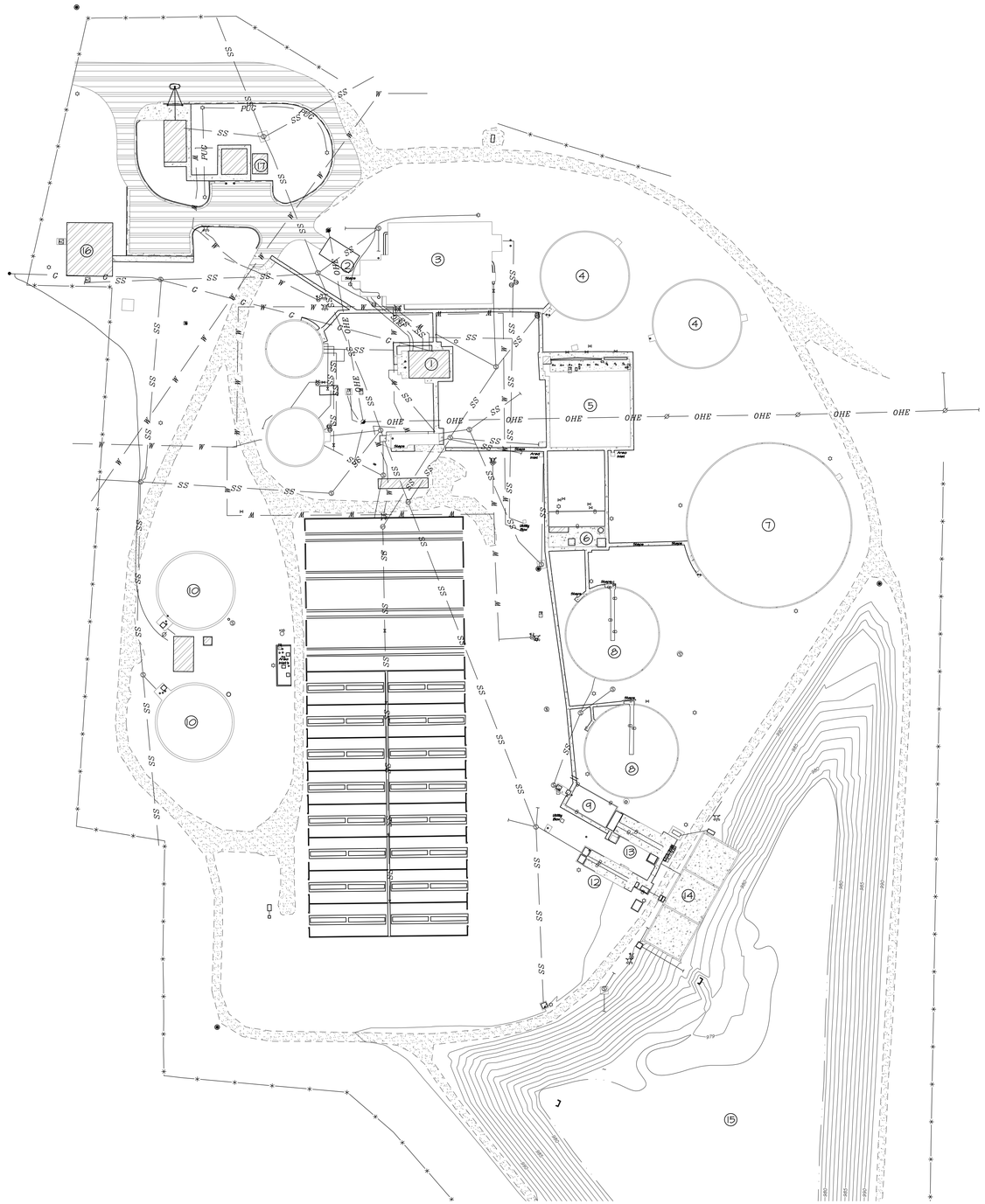

LEGEND

- SS — SANITARY SEWER LINE
- C — GAS LINE
- PUC — ELECTRIC UNDERGROUND LINE
- OHE — OVERHEAD ELECTRIC LINE
- W — WATER LINE
- FIRE HYDRANT
- WATER METER
- WATER VALVE BOX
- SANITARY SEWER MANHOLE
- VALVE
- GRAVEL
- ASPHALT
- CONCRETE
- PROPOSED DEMO

EXISTING UNIT LEGEND

①	INFLUENT PUMP STATION
②	PRE AERATION
③	PRIMARY SETTLING
④	STAGE 1 TRICKLING FILTER
⑤	INTERMEDIATE SETTLING TANK
⑥	PUMP STATION
⑦	STAGE 2 TRICKLING FILTER
⑧	FINAL SETTLING TANK
⑨	CHLORINE CONTACT BASIN
⑩	ANAEROBIC DIGESTER
⑪	SLUDGE DRYING BED
⑫	WET WEATHER EFFLUENT SCREW PUMP
⑬	EFFLUENT DISCHARGE SCREW PUMP
⑭	PRIMARY WET WEATHER FLOW EQUALIZATION BASIN
⑮	SECONDARY WET WEATHER FLOW EQUALIZATION BASIN
⑯	ADMINISTRATION BUILDING
⑰	CHEMICAL BUILDING

REGISTERED PROFESSIONAL ENGINEER
06/14/22
BRANDON WALL
21108
OKLAHOMA

WALL ENGINEERING
223 N. WASHINGTON, DURANT, OK 74701
OKLAHOMA CA #5413 EXP. JUNE 30, 2023

SUBMITTAL / REVISIONS:

DATE	BY	SUBMITTAL / REVISION
06/22	TL	ISSUED FOR BIDDING

SHAWNEE MUNICIPAL AUTHORITY
SOUTHSIDE IMPROVEMENTS
SHAWNEE, OKLAHOMA

EXISTING SITE PLAN

PROJECT NO.
SHN-20-01
DATE
06/22
DRAWN BY:
TL
CHECKED BY:
BW
REVIEWED BY:
DBW
SCALE:
1"=50'

BAR IS ONE INCH ON ORIGINAL DRAWING
0' 1'
IF NOT ONE INCH ON THIS SHEET, ADJUST SCALES ACCORDINGLY

SHEET
C-4

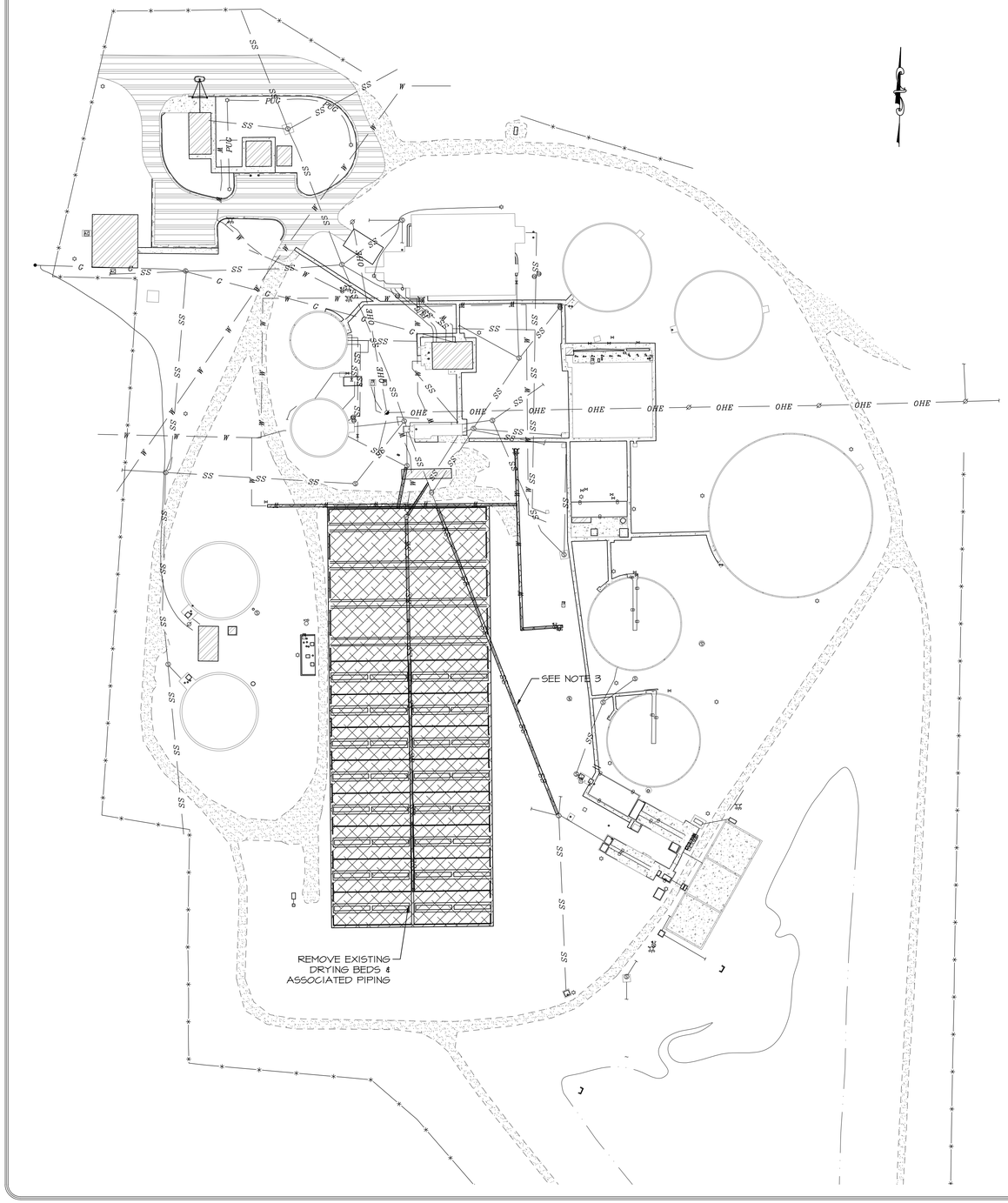

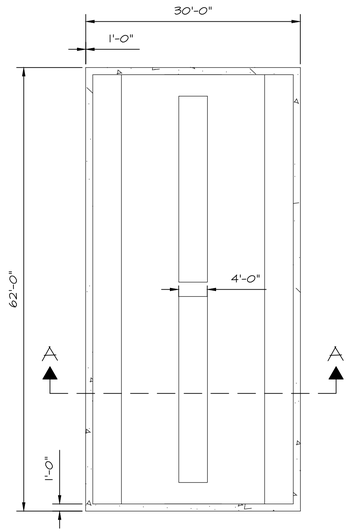

TYPICAL DRYING BED DETAIL
SCALE: NOT TO SCALE

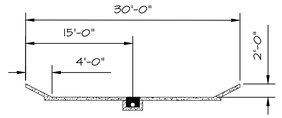

SECTION A-A

LEGEND

INITIAL DEMOLITION W/ SLUDGE REMOVAL/DISPOSAL

DEMOLITION SCOPE OF WORK (PRIOR TO PRIMARY CONSTRUCTION)

1. DEWATER & REMOVE SLUDGE FROM DRYING BEDS.
2. DEMOLISH DRYING BEDS TO A 981' ELEVATION.

NOTES:

1. SLUDGE TO BE REMOVED AND DISPOSED OF BY A SLUDGE REMOVAL CONTRACTOR WITH EXPERIENCE REMOVING & DISPOSING OF MUNICIPAL WASTEWATER TREATMENT PLANT SLUDGE. SEE 02_41_00 DEMOLITION.
2. CUT/PLUG EXISTING MAINS AT LIMITS OF DEMOLITION.
3. DEMOLITION OF EXISTING 30" SEWERMAIN TO FOLLOW INSTALLATION OF TMPI. SEE PRIMARY PIPING PLAN.

REGISTERED PROFESSIONAL ENGINEER
6/21/23
BRANDON WALL
21108
OKLAHOMA

WALL ENGINEERING
223 N. WASHINGTON, DURANT, OK 74701
OKLAHOMA CA #5413 EXP. JUNE 30, 2023

SUBMITTAL / REVISIONS:

DATE	BY	SUBMITTAL / REVISION
06/22	TL	ISSUED FOR BIDDING

SHAWNEE MUNICIPAL AUTHORITY
SOUTHSIDE IMPROVEMENTS
SHAWNEE, OKLAHOMA

DEMOLITION PLAN
INITIAL

PROJECT NO.	SHN-20-01
DATE	06/22
DRAWN BY:	TL
CHECKED BY:	BW
REVIEWED BY:	DBW
SCALE:	1"=100'

BAR IS ONE INCH ON ORIGINAL DRAWING
0" 1"
IF NOT ONE INCH ON THIS SHEET, ADJUST SCALES ACCORDINGLY

SHEET
C-5

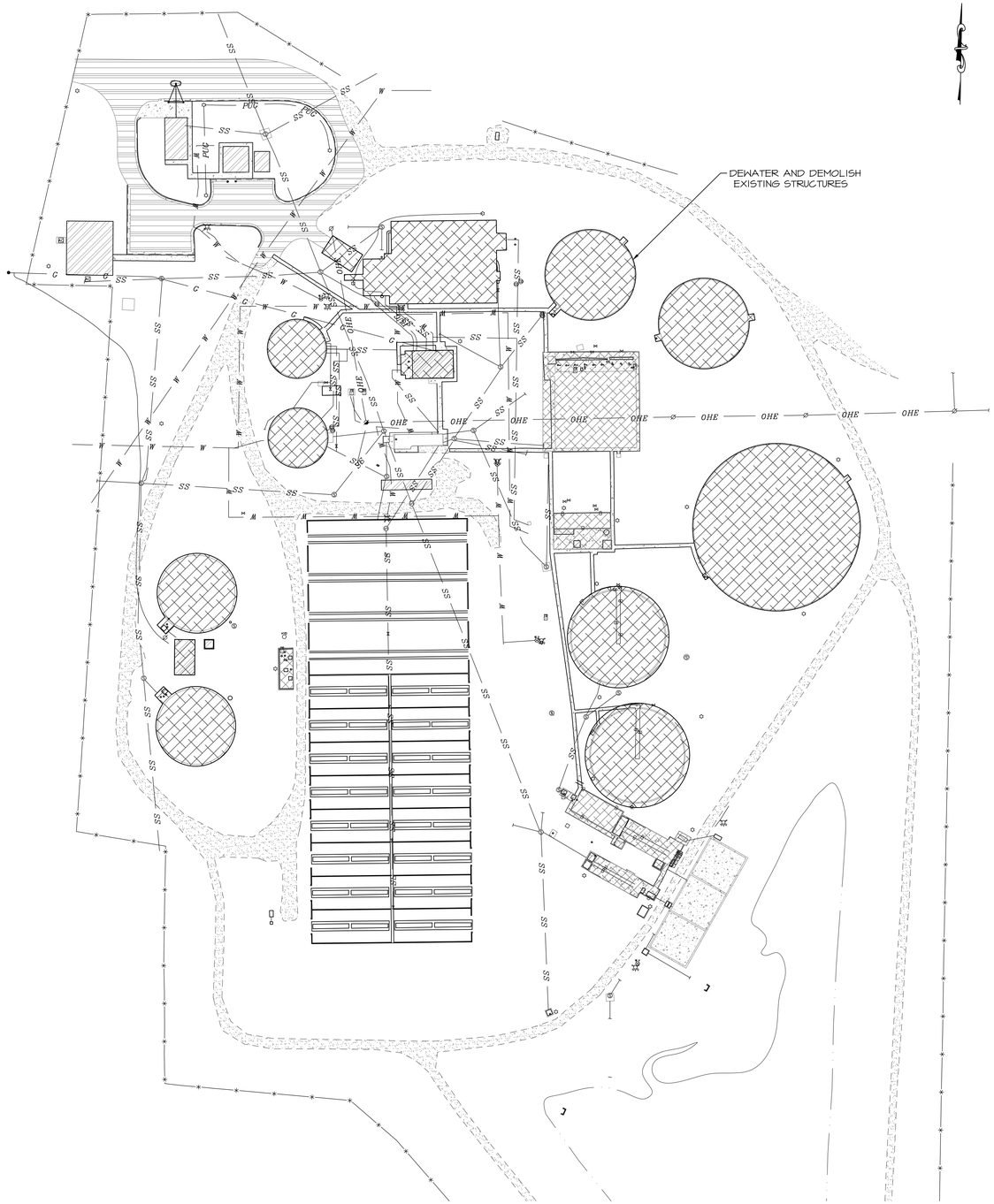

LEGEND

FINAL DEMOLITION WITH SLUDGE REMOVAL/DISPOSAL

DEMOLITION SCOPE OF WORK (AFTER STARTUP ON PROPOSED EQUIPMENT)

1. COMPLETE CONSTRUCTION, STARTUP, TESTING AND INITIAL OPERATION.
2. CLOSE ALL EXISTING VALVES AND RAW WASTEWATER LINES. VERIFY POSITIVE CLOSURE ON VALVES.
3. DISCONNECT ALL INCOMING ELECTRICAL W/POSITIVE VERIFICATION FROM POWER COMPANY. OFFICE/SHOP ELECTRICAL TO REMAIN.
4. CUT AND PLUG W/ CONCRETE EXISTING WATER/WASTEWATER LINES.
5. DEWATER AND DEMOLISH EXISTING STRUCTURES TO A DEPTH OF 4' BELOW FINAL GRADE.
6. BACKFILL STRUCTURES WITH SELECT FILL AND COMPACT. GRADE TO DRAIN.
7. DISPOSE OF DEMOLISHED MATERIALS OFF SITE IN A LOCATION PROVIDED BY THE CONTRACTOR PER STATE AND FEDERAL REGULATIONS. DISPOSAL INSIDE EXISTING BASINS WILL BE ACCEPTABLE PROVIDED 4' SOIL COVER REQUIREMENTS ARE MET.
8. TOPSOIL AND HYDROMULCH DISTURBED AREAS & WATER UNTIL ESTABILISHED.

NOTES:

1. SLUDGE TO BE REMOVED AND DISPOSED OF BY A SLUDGE REMOVAL CONTRACTOR WITH EXPERIENCE REMOVING & DISPOSING OF MUNICIPAL WASTEWATER TREATMENT PLANT SLUDGE. SEE 02_41_00 DEMOLITION.

2. ALL STRUCTURES AND BUILDINGS SCHEDULED TO REMAIN ARE TO HAVE MISCELLANEOUS EQUIPMENT, PUMPS, ETC. REMOVED & DISPOSED OF.

3. CUT/PLUG EXISTING MAINS AT LIMITS OF CONSTRUCTION.

WALL ENGINEERING
223 N. WASHINGTON, DURANT, OK 74701
OKLAHOMA CA #5413 EXP. JUNE 30, 2023

SUBMITTAL / REVISIONS:

DATE	BY	SUBMITTAL / REVISION
06/22	TL	ISSUED FOR BIDDING

SHAWNEE MUNICIPAL AUTHORITY
SOUTHSIDE IMPROVEMENTS
SHAWNEE, OKLAHOMA

DEMOLITION PLAN
FINAL

PROJECT NO.	SHN-20-01
DATE	06/22
DRAWN BY:	TL
CHECKED BY:	BW
REVIEWED BY:	DBW
SCALE:	1"=100'

BAR IS ONE INCH ON ORIGINAL DRAWING
0' 1'
IF NOT ONE INCH ON THIS SHEET, ADJUST SCALES ACCORDINGLY

REGISTERED PROFESSIONAL ENGINEER
6/15/22
BRANDON WALL
21108
OKLAHOMA

SHEET

C-5A

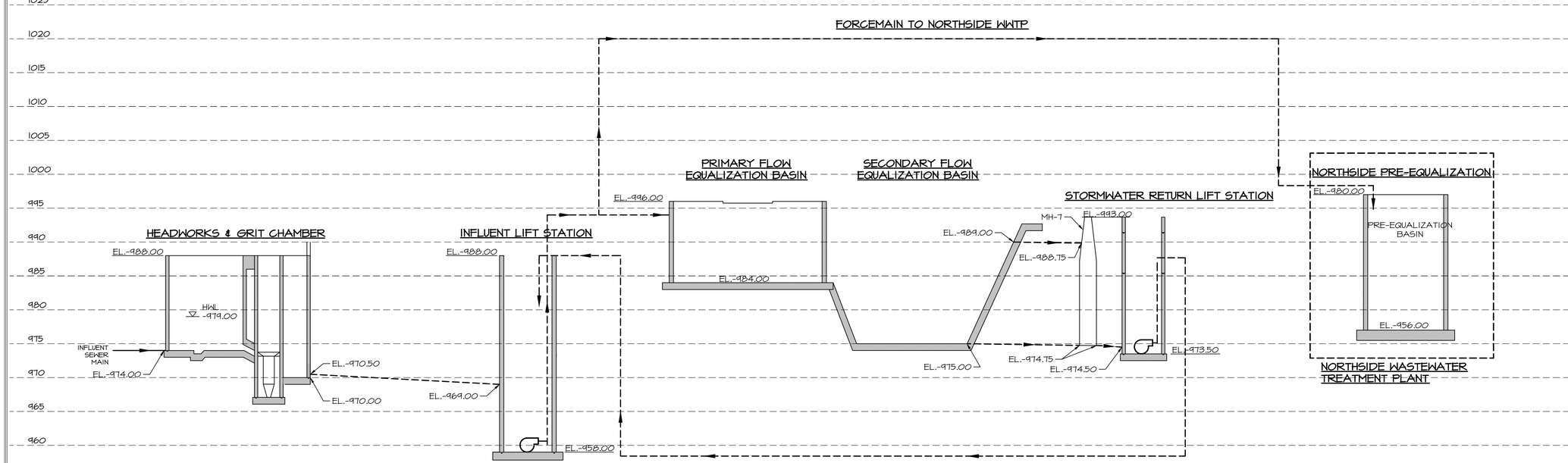

WALL ENGINEERING

223 N. WASHINGTON, DURANT, OK 74701
OKLAHOMA CA #5413 EXP. JUNE 30, 2023

SUBMITTAL / REVISIONS:

DATE	BY	SUBMITTAL / REVISION
06/22	TL	ISSUED FOR BIDDING

SHAWNEE MUNICIPAL AUTHORITY
SOUTHSIDE IMPROVEMENTS
SHAWNEE, OKLAHOMA

HYDRAULIC PROFILE

PROJECT NO.
SHN-20-01

DATE
06/22

DRAWN BY:
BW

CHECKED BY:
JR

REVIEWED BY:
DBW

SCALE:
NOT TO SCALE

BAR IS ONE INCH ON ORIGINAL DRAWING
0" 1"
IF NOT ONE INCH ON THIS SHEET, ADJUST SCALES ACCORDINGLY

REGISTERED PROFESSIONAL ENGINEER
06/21/22
BRANDON WALL
21108
OKLAHOMA

SHEET

C-6

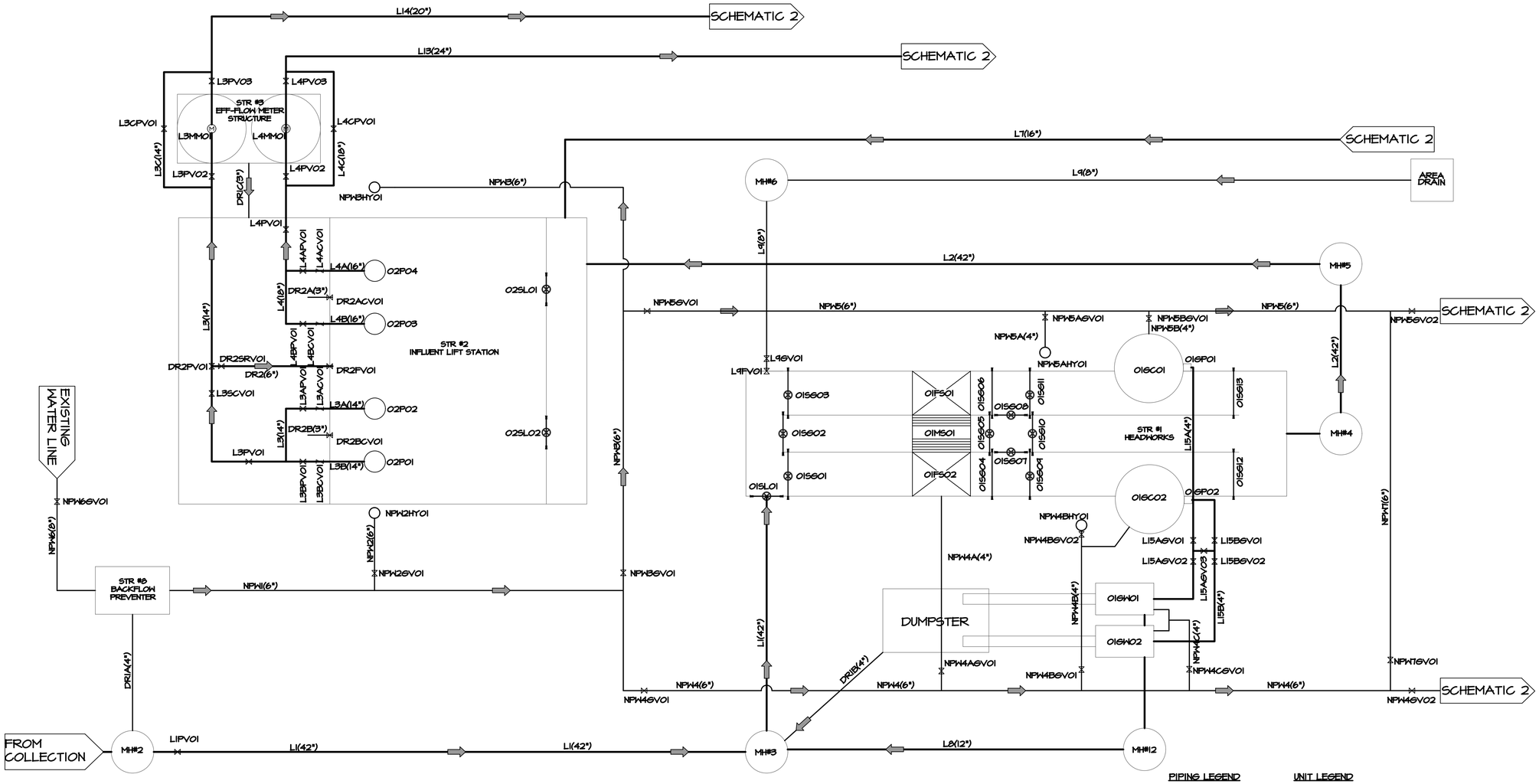

EXISTING WATER LINE

PIPING LEGEND

L	RAW SEWAGE
NPW	NON POTABLE WATER
DR	DRAIN LINE

UNIT LEGEND

GV	GATE VALVE
PV	PLUG VALVE
CV	CHECK VALVE
FV	FLAP VALVE
PCV	PINCH VALVE
SCV	SMART CHECK VALVE
SRV	SURGE RELIEF VALVE
SL	SLUICE GATE
SG	SLIDE GATE
PF	PARSHALL FLUME
FS	FINE SCREEN
MS	MANUAL BAR SCREEN
GW	GRIT WASHER
GC	GRIT CHAMBER
GP	GRIT PUMP
HY	HYDRANT
MM	MAGMETER
I.D.	##GV##

STRUCTURE NUMBER — VALVE TYPE & I.D.

REGISTERED PROFESSIONAL ENGINEER
06/30/23
BRANDON WALL
21108
OKLAHOMA

WALL ENGINEERING
223 N. WASHINGTON, DURANT, OK 74701
OKLAHOMA CA #5413 EXP. JUNE 30, 2023

SUBMITTAL / REVISIONS:

DATE	BY	SUBMITTAL / REVISION
06/22	TL	ISSUED FOR BIDDING

SHAWNEE MUNICIPAL AUTHORITY
SOUTHSIDE IMPROVEMENTS
SHAWNEE, OKLAHOMA

LIQUID FLOW SCHEMATIC 1

PROJECT NO.
SHN-20-01
DATE
06/22
DRAWN BY:
BW
CHECKED BY:
JR
REVIEWED BY:
DBW
SCALE:
NOT TO SCALE

BAR IS ONE INCH ON ORIGINAL DRAWING
0" 1"
IF NOT ONE INCH ON THIS SHEET, ADJUST SCALES ACCORDINGLY

SHEET
C-7

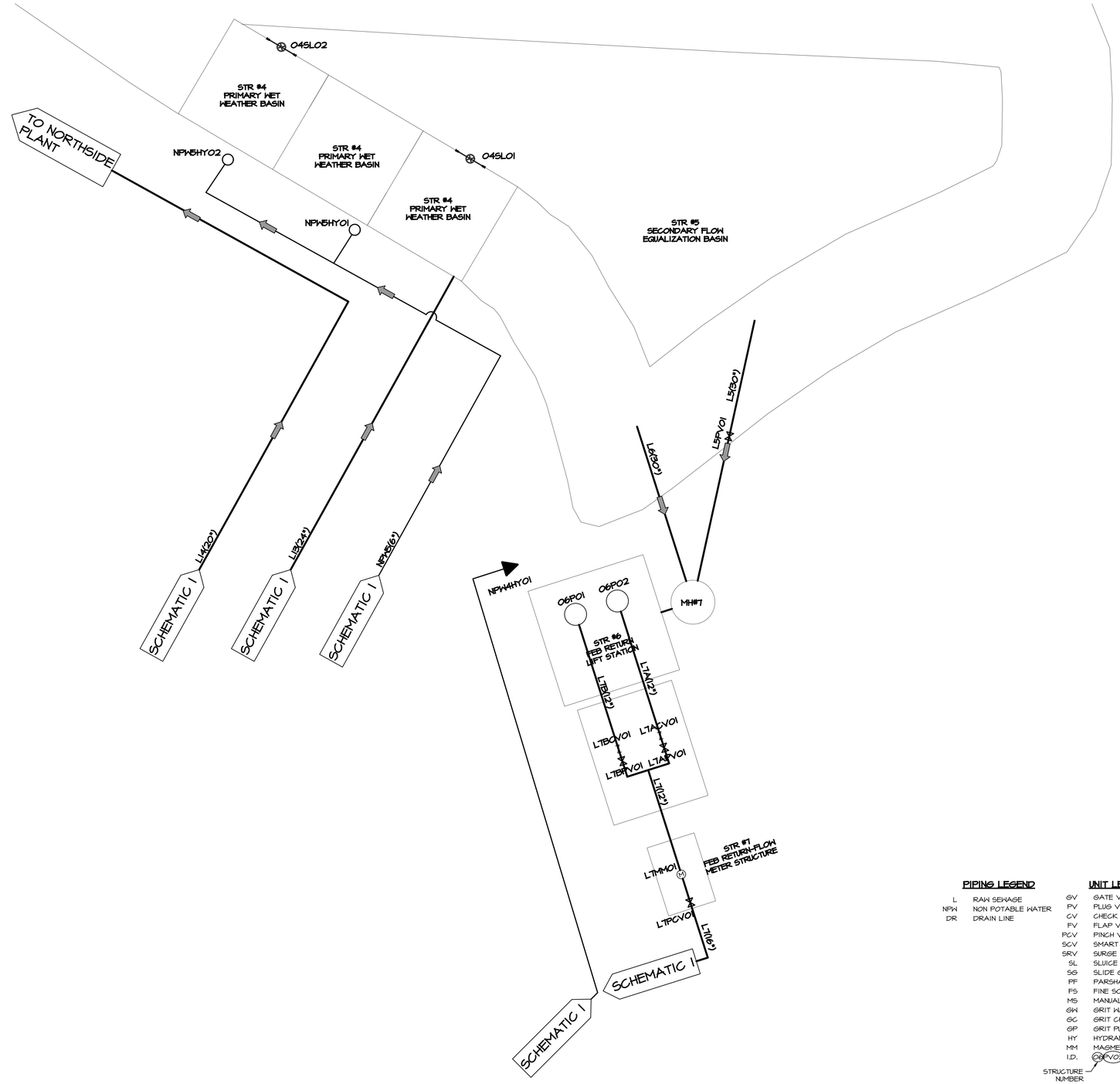

PIPING LEGEND

L	RAW SEWAGE
NPW	NON POTABLE WATER
DR	DRAIN LINE

UNIT LEGEND

GV	GATE VALVE
PV	PLUG VALVE
CV	CHECK VALVE
FV	FLAP VALVE
PCV	PINCH VALVE
SCV	SMART CHECK VALVE
SRV	SURGE RELIEF VALVE
SL	SLUICE GATE
SG	SLIDE GATE
PF	PARSHALL FLUME
FS	FINE SCREEN
MS	MANUAL BAR SCREEN
GW	GRIT WASHER
GC	GRIT CHAMBER
GP	GRIT PUMP
HY	HYDRANT
MM	MAGMETER
I.D.	06FV02

STRUCTURE NUMBER — VALVE TYPE & I.D.

REGISTERED PROFESSIONAL ENGINEER
06/14/22
BRANDON WALL
21108
OKLAHOMA

WALL ENGINEERING
223 N. WASHINGTON, DURANT, OK 74701
OKLAHOMA CA #5413 EXP. JUNE 30, 2023

SUBMITTAL / REVISIONS:

DATE	BY	SUBMITTAL / REVISION
06/22	TL	ISSUED FOR BIDDING

SHAWNEE MUNICIPAL AUTHORITY
SOUTHSIDE IMPROVEMENTS
SHAWNEE, OKLAHOMA

LIQUID FLOW SCHEMATIC 2

PROJECT NO.
SHN-20-01

DATE
06/22

DRAWN BY:
BW

CHECKED BY:
JR

REVIEWED BY:
DBW

SCALE:
NOT TO SCALE

BAR IS ONE INCH ON ORIGINAL DRAWING
0" 1"
IF NOT ONE INCH ON THIS SHEET, ADJUST SCALES ACCORDINGLY

SHEET
C-7A

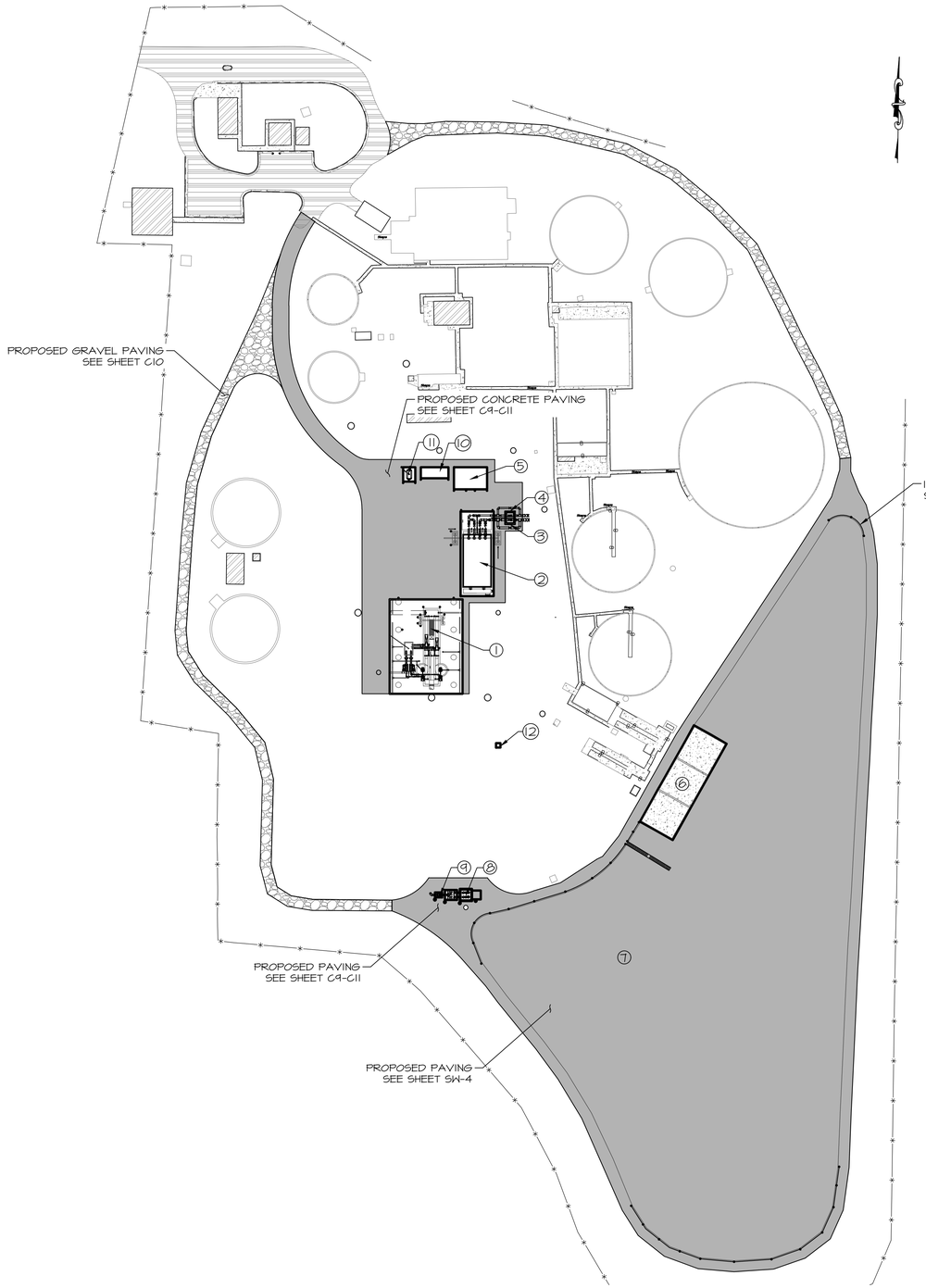

SEQUENCE OF CONSTRUCTION

1. DEMOLITION, INITIAL.
2. CONSTRUCTION OF HEADWORKS INFLUENT LIFT STATION, ELECTRICAL, CONTROLS, GENERATOR, & MISCELLANEOUS ASSOCIATED ITEMS.
3. STARTUP, TESTING & OPERATIONS OF FACILITY.
4. SLUDGE REMOVAL & DISPOSAL.
5. STORMWATER IMPROVEMENTS (STORMWATER LIFT STATION MAY BE CONSTRUCTED WITH REMAINDER OF FACILITY AT CONTRACTORS OPTION).
6. DEMOLITION.

PROPOSED UNIT LEGEND

①	HEADWORKS W/ COVER
②	INFLUENT LIFT STATION
③	FLOW METER STRUCTURE (FEB)
④	FLOW METER STRUCTURE (EFFLUENT)
⑤	ELECTRIC/CONTROLS BUILDING
⑥	PRIMARY FLOW EQUALIZATION BASIN
⑦	SECONDARY FLOW EQUALIZATION BASIN
⑧	FEB RETURN LIFT STATION
⑨	FLOW METER STRUCTURE (FEBLS)
⑩	GENERATOR
⑪	BACKFLOW PREVENTOR
⑫	AREA DRAIN

LEGEND

- EXISTING FENCE
- PROPOSED UNIT
- CONCRETE SITE PAVING
- GRAVEL SITE PAVING
- GUARD RAIL (SEE DETAIL SHEETS)

TYPICAL SYMBOLS

- MANHOLE
- YARD HYDRANT
- PIPE BOLLARDS

WALL ENGINEERING
223 N. WASHINGTON, DURANT, OK 74701
OKLAHOMA CA #5413 EXP. JUNE 30, 2023

SUBMITTAL / REVISIONS:

DATE	BY	SUBMITTAL / REVISION
06/22	TL	ISSUED FOR BIDDING

SHAWNEE MUNICIPAL AUTHORITY
SOUTHSIDE IMPROVEMENTS
SHAWNEE, OKLAHOMA

SITE PLAN

PROJECT NO. SHN-20-01
DATE 06/22
DRAWN BY: TL
CHECKED BY: BW
REVIEWED BY: DBW
SCALE: 1"=60'

BAR IS ONE INCH ON ORIGINAL DRAWING
0" 1"
IF NOT ONE INCH ON THIS SHEET, ADJUST SCALES ACCORDINGLY

REGISTERED PROFESSIONAL ENGINEER
BRANDON WALL
21108
OKLAHOMA

SHEET
C-8

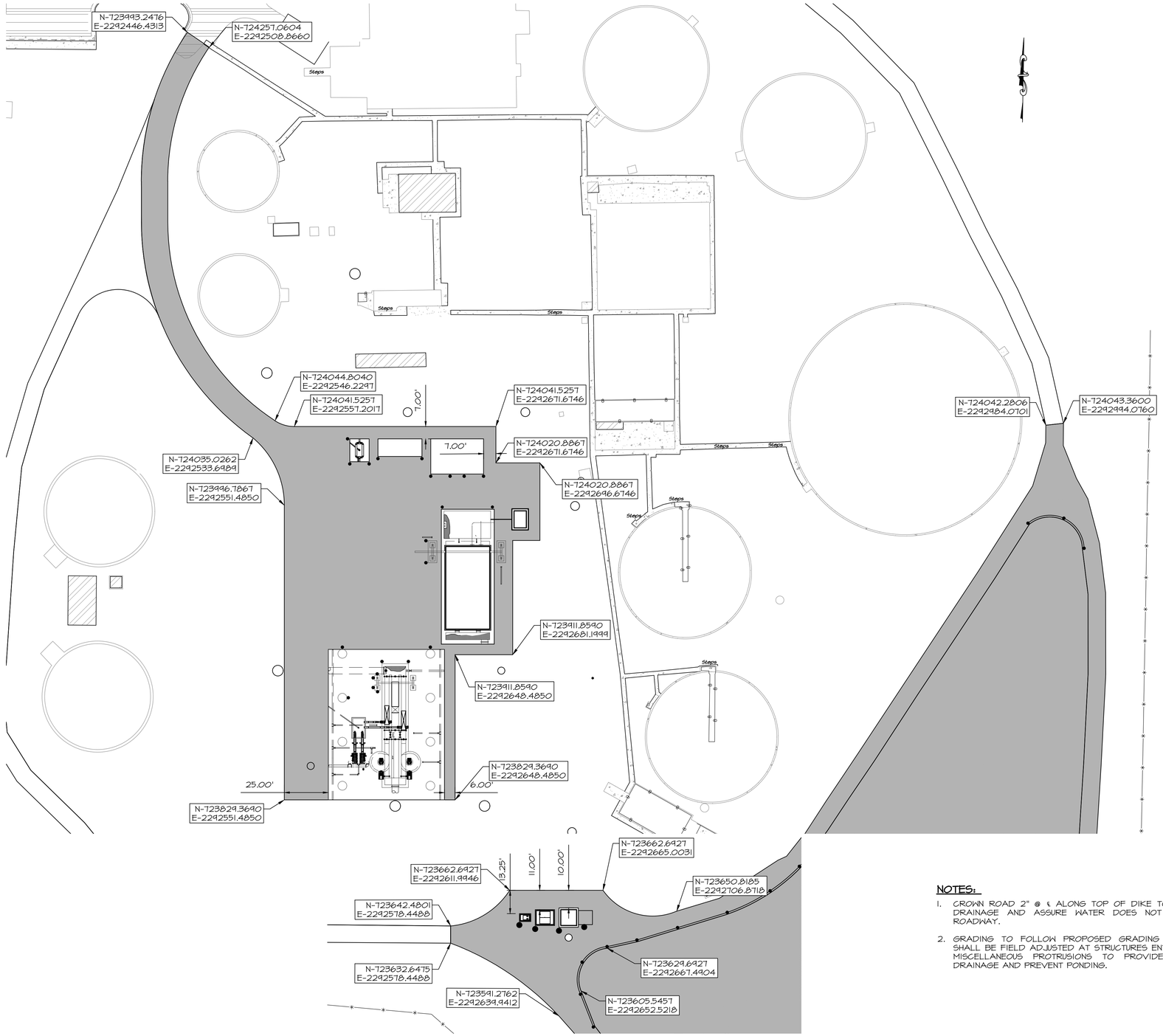

LEGEND

- EXISTING FENCE
- PROPOSED UNIT
- CONCRETE SITE PAVING (3,407 S.Y.)
- GUARD RAIL (SEE DETAIL SHEETS)

TYPICAL SYMBOLS

- MANHOLE
- YARD HYDRANT
- PIPE BOLLARDS

NOTES:

1. CROWN ROAD 2" @ ℄ ALONG TOP OF DIKE TO PROVIDE DRAINAGE AND ASSURE WATER DOES NOT POND ON ROADWAY.
2. GRADING TO FOLLOW PROPOSED GRADING PLAN, BUT SHALL BE FIELD ADJUSTED AT STRUCTURES ENTRYWAYS, & MISCELLANEOUS PROTRUSIONS TO PROVIDE POSITIVE DRAINAGE AND PREVENT PONDING.

REGISTERED PROFESSIONAL ENGINEER
06/29/22
BRANDON WALL
21108
OKLAHOMA

WALL ENGINEERING

223 N. WASHINGTON, DURANT, OK 74701
OKLAHOMA CA #5413 EXP. JUNE 30, 2023

SUBMITTAL / REVISIONS:

DATE	BY	SUBMITTAL / REVISION
06/22	TL	ISSUED FOR BIDDING

SHAWNEE MUNICIPAL AUTHORITY
SOUTHSIDE IMPROVEMENTS
SHAWNEE, OKLAHOMA

CONCRETE PAVING PLAN

PROJECT NO.	SHN-20-01
DATE	06/22
DRAWN BY:	TL
CHECKED BY:	BW
REVIEWED BY:	DBW
SCALE:	1"=30'

BAR IS ONE INCH ON ORIGINAL DRAWING
0' 1'
IF NOT ONE INCH ON THIS SHEET, ADJUST SCALES ACCORDINGLY

SHEET

C-9

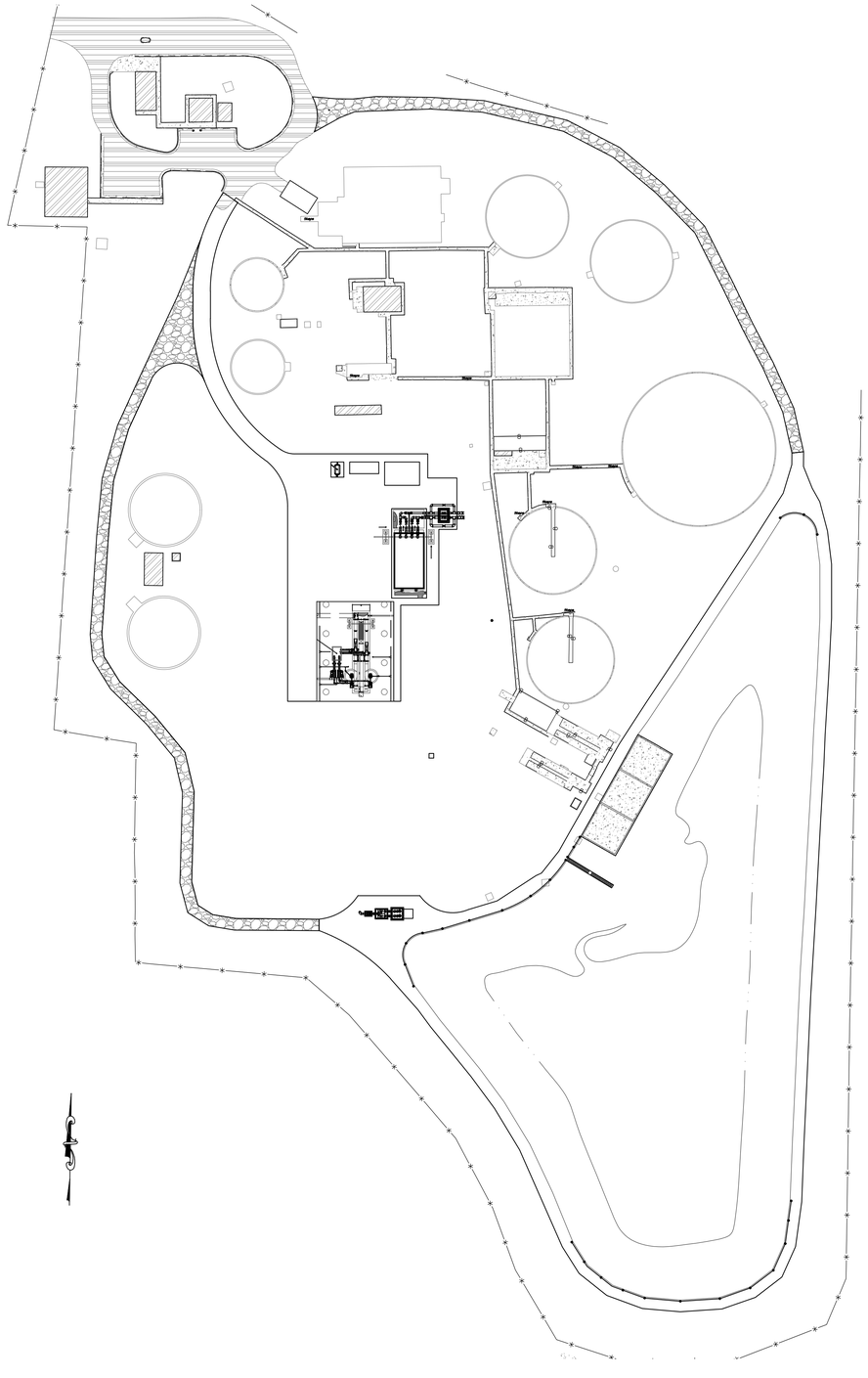

SCOPE OF WORK:

1. APPROXIMATELY 1600 TONS OF GRAVEL TO BE INSTALLED TO AVERAGE 6" DEPTH APPROXIMATELY 10' WIDTH. GRADE TO DRAIN.
2. SHOULDER UP GRAVEL SURFACE WITH EXISTING MATERIAL ON GRAVEL.
3. PRICE BID TO INCLUDE MINOR GRADING OPERATION AS REQUIRED. GRADING REQUIRED SHALL BE VERIFIED PRIOR TO BIDDING.
4. SEE DETAIL SHEETS FOR CROSS SECTION.

LEGEND

- EXISTING FENCE
- PROPOSED UNIT
- GRAVEL SITE PAVING
- GUARD RAIL (SEE DETAIL SHEETS)

REGISTERED PROFESSIONAL ENGINEER
06/21/22
BRANDON WALL
21108
OKLAHOMA

WALL ENGINEERING
223 N. WASHINGTON, DURANT, OK 74701
OKLAHOMA CA #5413 EXP. JUNE 30, 2023

SUBMITTAL / REVISIONS:

DATE	BY	SUBMITTAL / REVISION
06/22	TL	ISSUED FOR BIDDING

SHAWNEE MUNICIPAL AUTHORITY
SOUTHSIDE IMPROVEMENTS
SHAWNEE, OKLAHOMA

GRAVEL SURFACE PLAN

PROJECT NO.
SHN-20-01

DATE
06/22

DRAWN BY:
TL

CHECKED BY:
BW

REVIEWED BY:
DBW

SCALE:
1"=60'

BAR IS ONE INCH ON ORIGINAL DRAWING
0" 1"
IF NOT ONE INCH ON THIS SHEET, ADJUST SCALES ACCORDINGLY

SHEET
C-10

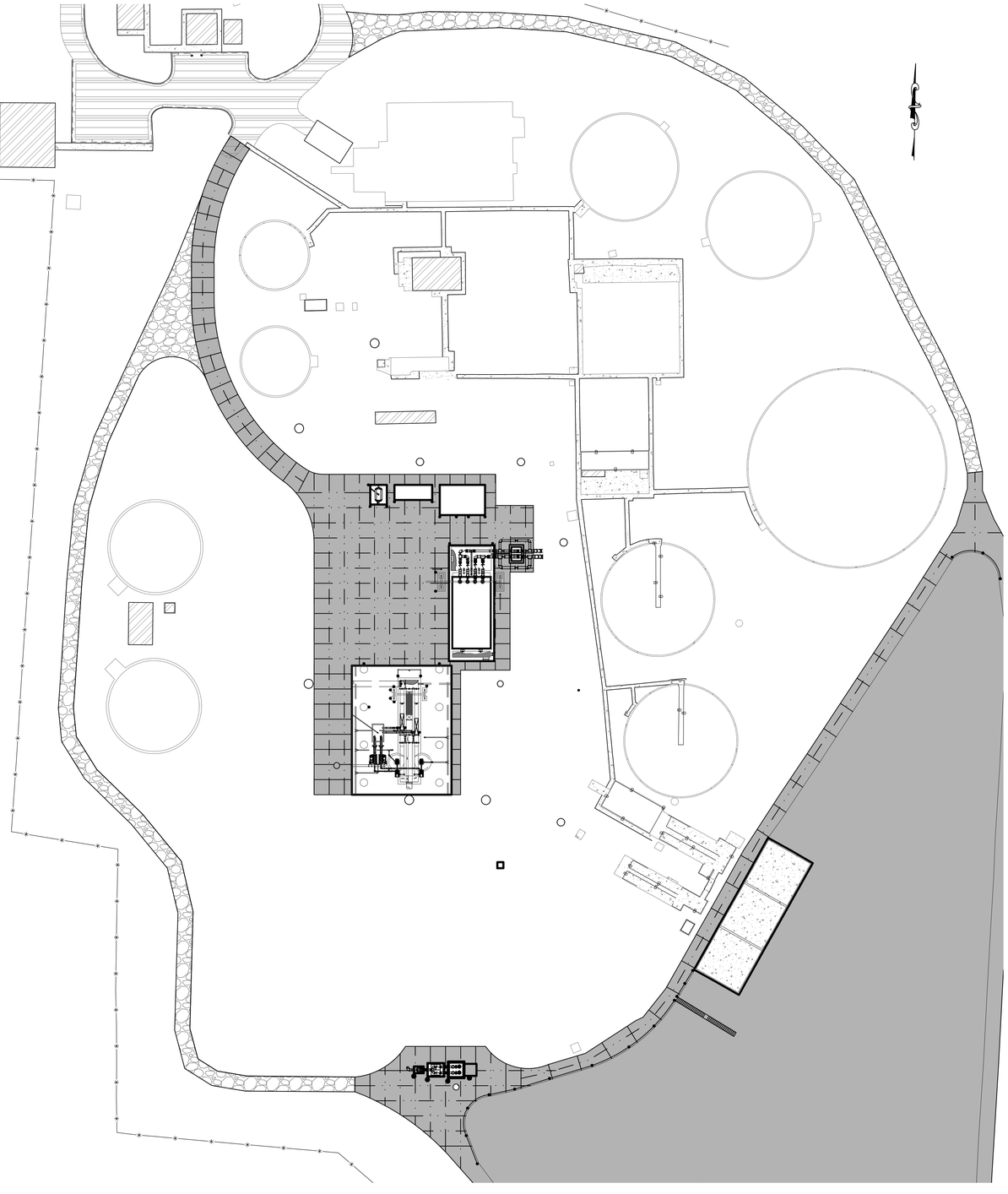

LEGEND

- EXISTING FENCE
- PROPOSED UNIT
- CONCRETE SITE PAVING
- GRAVEL SITE PAVING
- EXPANSION JOINT
- CONTRACTION JOINT

TYPICAL SYMBOLS

- MANHOLE
- YARD HYDRANT
- PIPE BOLLARDS

NOTES:

1. JOINTING PLAN IS FOR REFERENCE ONLY. CONTRACTOR TO SUBMIT A FINAL PROPOSED JOINT PLAN TO ENGINEER FOR APPROVAL PRIOR TO CONSTRUCTION.
2. SEE DETAIL SHEETS FOR JOINTING DETAILS.
3. ALL STRUCTURES TO BE SURROUNDED BY EXPANSION JOINTS.

REGISTERED PROFESSIONAL ENGINEER
6/21/22
BRANDON WALL
21108
OKLAHOMA

WALL ENGINEERING
223 N. WASHINGTON, DURANT, OK 74701
OKLAHOMA CA #5413 EXP. JUNE 30, 2023

SUBMITTAL / REVISIONS:

DATE	BY	SUBMITTAL / REVISION
06/22	TL	ISSUED FOR BIDDING

SHAWNEE MUNICIPAL AUTHORITY
SOUTHSIDE IMPROVEMENTS
SHAWNEE, OKLAHOMA

CONCRETE JOINTING PLAN

PROJECT NO.	SHN-20-01
DATE	06/22
DRAWN BY:	TL
CHECKED BY:	BW
REVIEWED BY:	DBW
SCALE:	1"=40'

BAR IS ONE INCH ON ORIGINAL DRAWING
0" 1"
IF NOT ONE INCH ON THIS SHEET, ADJUST SCALES ACCORDINGLY

SHEET

C-11

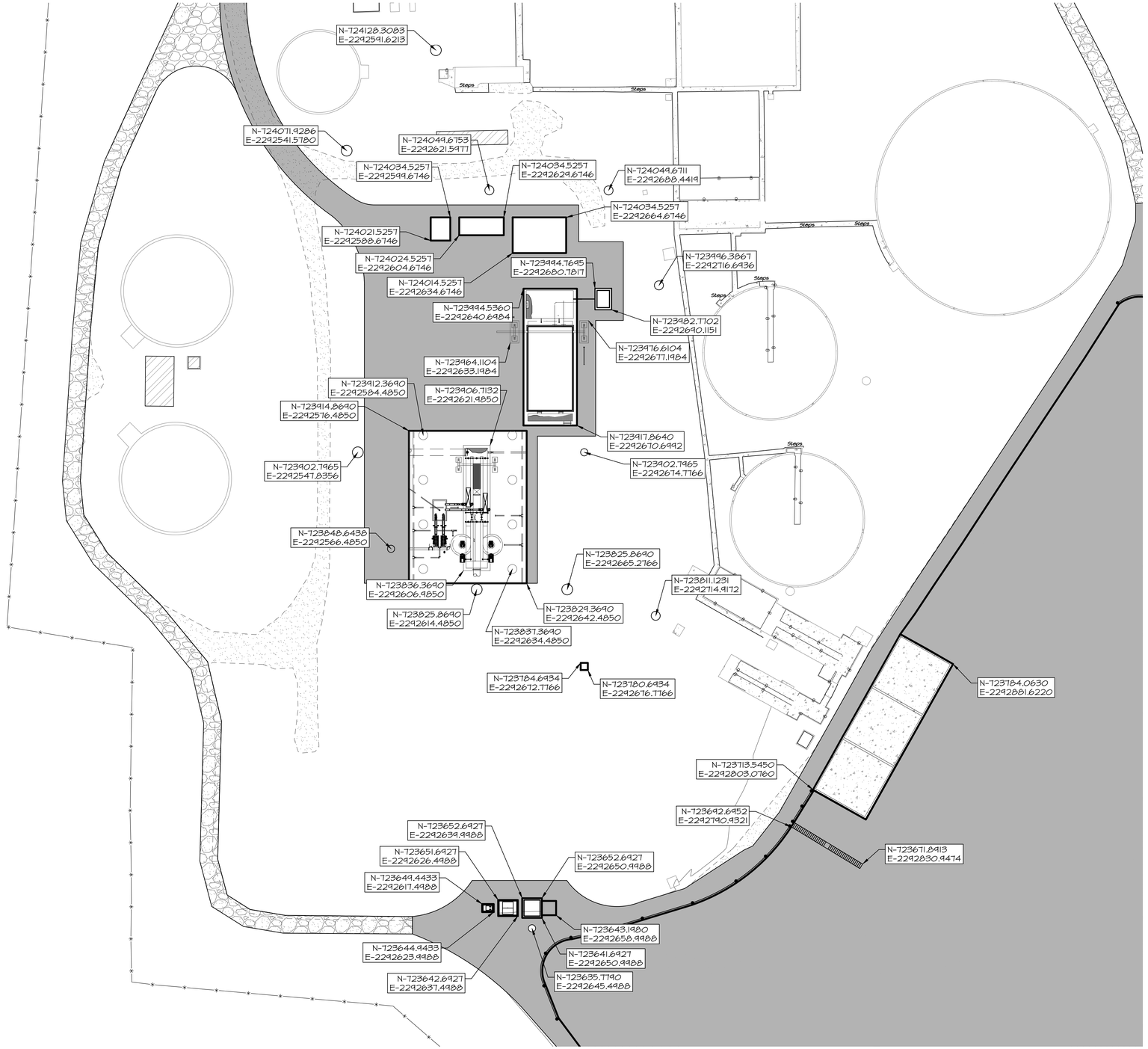

LEGEND

- EXISTING FENCE
- PROPOSED UNIT
- CONCRETE SITE PAVING
- GRAVEL SITE PAVING
- PROPOSED MANHOLE

WALL ENGINEERING

223 N. WASHINGTON, DURANT, OK 74701
OKLAHOMA CA #5413 EXP. JUNE 30, 2023

SUBMITTAL / REVISIONS:

DATE	BY	SUBMITTAL / REVISION
06/22	TL	ISSUED FOR BIDDING

SHAWNEE MUNICIPAL AUTHORITY
SOUTHSIDE IMPROVEMENTS
SHAWNEE, OKLAHOMA

COORDINATE PLAN

PROJECT NO.
SHN-20-01

DATE
06/22

DRAWN BY:
TL

CHECKED BY:
BW

REVIEWED BY:
DBW

SCALE:
1"=30'

BAR IS ONE INCH ON ORIGINAL DRAWING
0' 1'
IF NOT ONE INCH ON THIS SHEET, ADJUST SCALES ACCORDINGLY

REGISTERED PROFESSIONAL ENGINEER
06/24/22
BRANDON WALL
21108
OKLAHOMA

SHEET

C-12

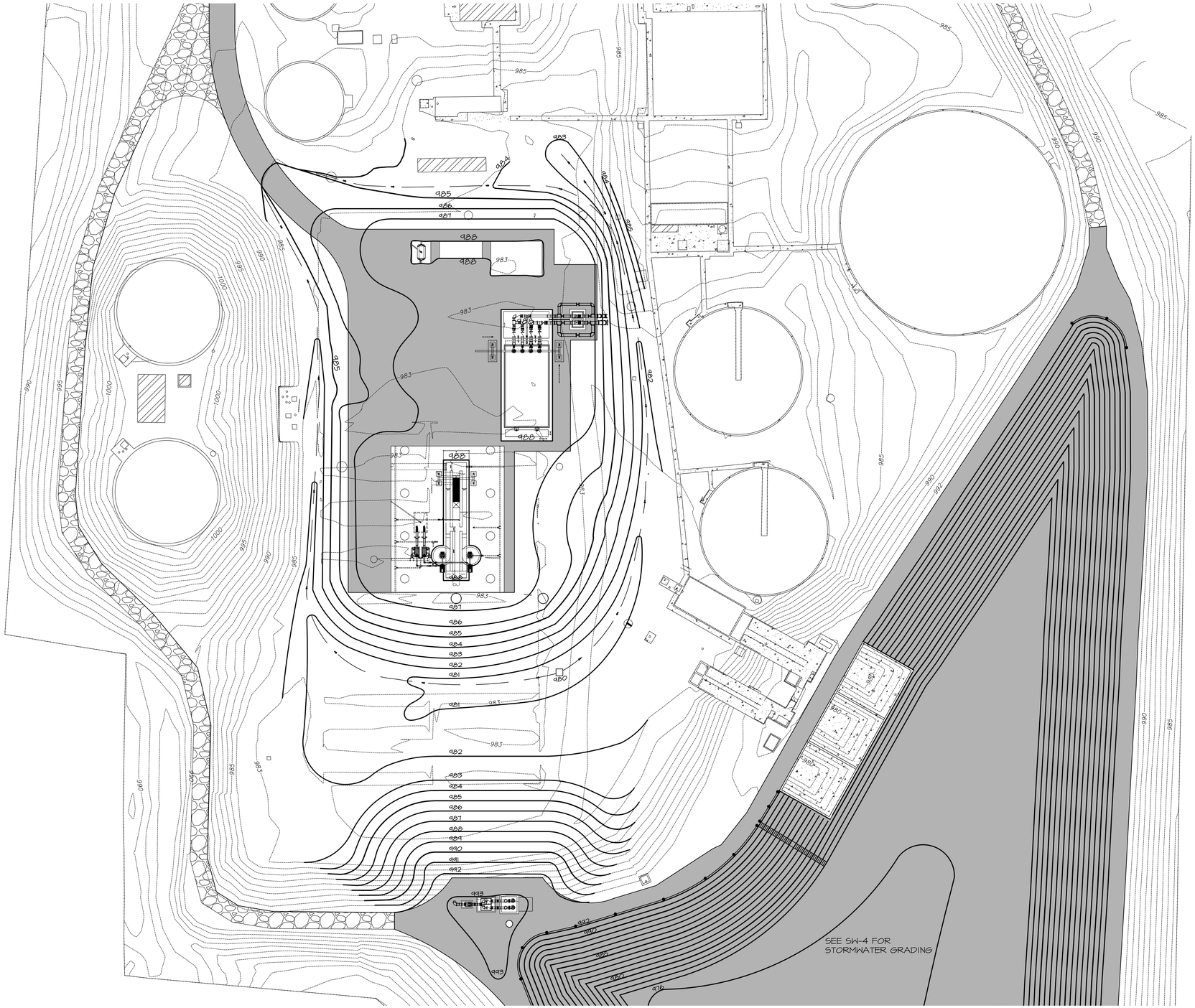

NOTES:

1. CONTRACTOR TO ADJUST GRADING ADJACENT TO BUILDING TO SMOOTHLY MEET AND MATCH PROPOSED FINISHED FLOOR ELEVATION AT DOORWAYS.
2. ADJUST GRADING TO MATCH FINAL GRADING OF STORMWATER POND AFTER SLUDGE REMOVAL.
3. SEE SW1-SW5 FOR STORMWATER POND GRADING.

LEGEND

- PROPOSED UNIT
- CONCRETE SITE PAVING
- GRAVEL SURFACE
- xxxx — PROPOSED CONTOUR
- xxxx — EXISTING CONTOUR
- GRADE TO DRAIN

REGISTERED PROFESSIONAL ENGINEER
BRANDON WALL
21108
OKLAHOMA
06/30/23

WALL ENGINEERING
223 N. WASHINGTON, DURANT, OK 74701
OKLAHOMA CA #5413 EXP. JUNE 30, 2023

SUBMITTAL / REVISIONS:

DATE	BY	SUBMITTAL / REVISION
06/22	TL	ISSUED FOR BIDDING

SHAWNEE MUNICIPAL AUTHORITY
SOUTHSIDE IMPROVEMENTS
SHAWNEE, OKLAHOMA

GRADING PLAN

PROJECT NO.
SHN-20-01

DATE
06/22

DRAWN BY:
BW

CHECKED BY:
BW

REVIEWED BY:
DBW

SCALE:
1"=30'

BAR IS ONE INCH ON ORIGINAL DRAWING
0' 1'
IF NOT ONE INCH ON THIS SHEET, ADJUST SCALES ACCORDINGLY

SHEET
C-13

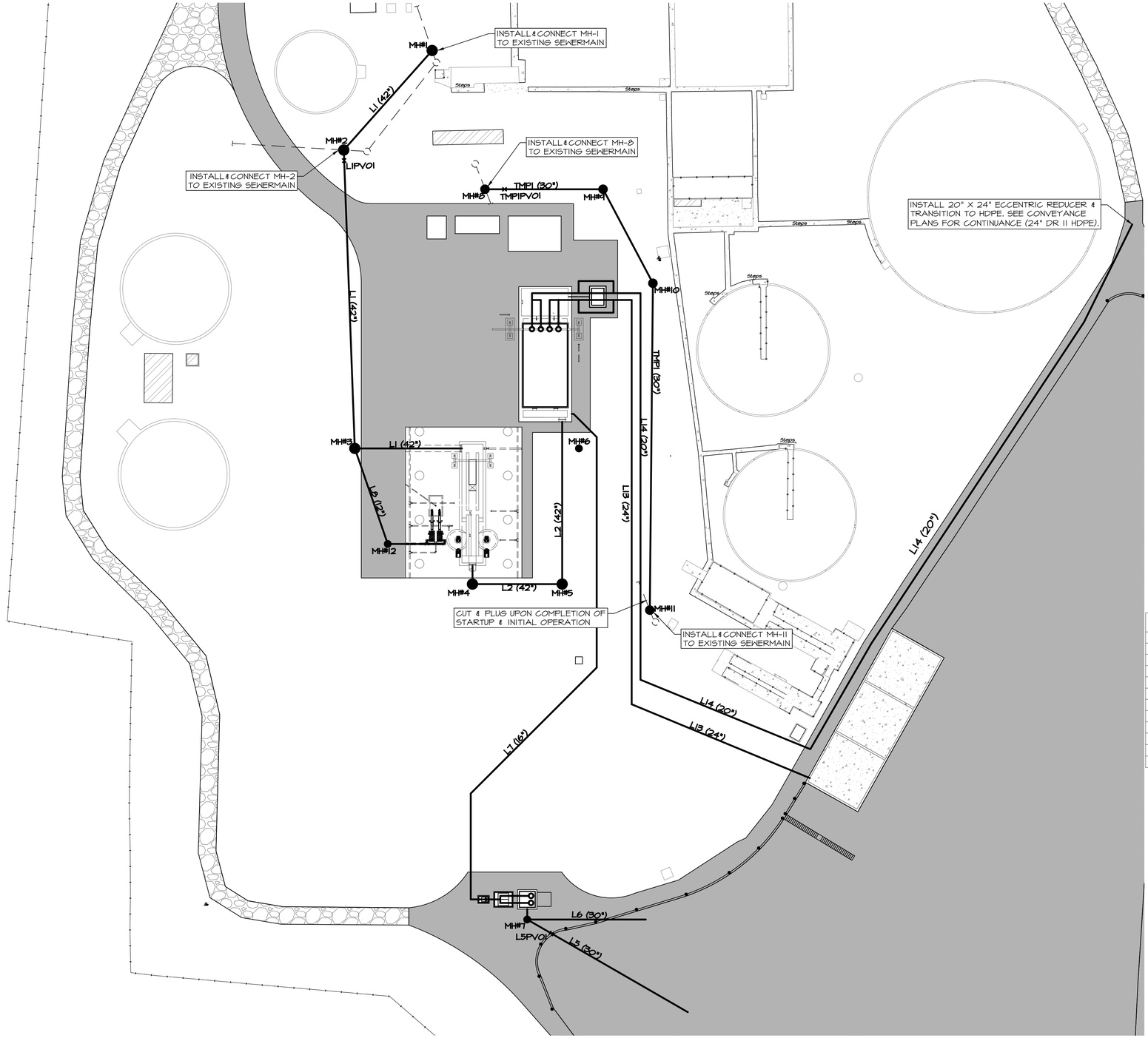

LEGEND

- EXISTING FENCE
- PROPOSED UNIT
- CONCRETE SITE PAVING
- PROPOSED SEWERMAIN
- EXISTING SEWER LINE

TYPICAL SYMBOLS

- EXISTING MANHOLE
- PROPOSED MANHOLE
- VALVE W/ADJ. BOX

PIPING LEGEND

L	DI CLASS 250
TMP	SDR-26 PVC
NPW	DI CLASS 250
DR	DI CLASS 250

VALVE SCHEDULE

VALVE I.D.	VALVE TYPE	VALVE SIZE	MOTORIZED
L1PV01	PLUG	42"	NA
L5PV01	PLUG	30"	NA
TMP1PV01	PLUG	30"	NA

MANHOLE LEGEND

NO.	DIA	TR	GRADE	EFFLUENT FL	INFLUENT FL	NORTHING	EASTING
MH-1	6'	986.00'	985.82'	975.75'	975.88'	724128.3083	2242591.6213
MH-2	6'	986.00'	985.13'	975.15'	975.15'	724071.9286	2242541.5780
MH-3	6'	987.00'	986.47'	974.50'	974.50'	723902.7965	2242547.8356
MH-4	6'	988.00'	987.57'	970.37'	970.37'	723825.8690	2242614.4850
MH-5	6'	986.61'	986.61'	969.94'	969.94'	723825.8690	2242665.2766
MH-6	4'	986.91'	986.91'	975.46'	975.46'	723902.7965	2242674.7766
MH-7	5'	993.00'	993.00'	974.50'	974.75'	723635.7790	2242645.4488
MH-8	5'	987.00'	986.97'	975.24'	975.31'	724044.6753	2242621.5977
MH-9	5'	985.50'	985.10'	975.12'	975.14'	724044.6711	2242688.4419
MH-10	5'	983.00'	983.00'	974.96'	974.98'	723946.3867	2242716.6936
MH-11	5'	981.50'	981.05'	974.52'	974.54'	723811.1231	2242714.9172
MH-12	4'	987.28'	987.28'	983.25'	983.48'	723848.6438	2242566.4850



WALL ENGINEERING
223 N. WASHINGTON, DURANT, OK 74701
OKLAHOMA CA #5413 EXP. JUNE 30, 2023

SUBMITTAL / REVISIONS:

DATE	BY	SUBMITTAL / REVISION
06/22	TL	ISSUED FOR BIDDING

SHAWNEE MUNICIPAL AUTHORITY
SOUTHSIDE IMPROVEMENTS
SHAWNEE, OKLAHOMA

PRIMARY PIPING PLAN

PROJECT NO.
SHN-20-01
DATE
06/22
DRAWN BY:
TL
CHECKED BY:
BW
REVIEWED BY:
DBW
SCALE:
1"=60'

BAR IS ONE INCH ON ORIGINAL DRAWING
0" 1"
IF NOT ONE INCH ON THIS SHEET, ADJUST SCALES ACCORDINGLY

SHEET
C-14

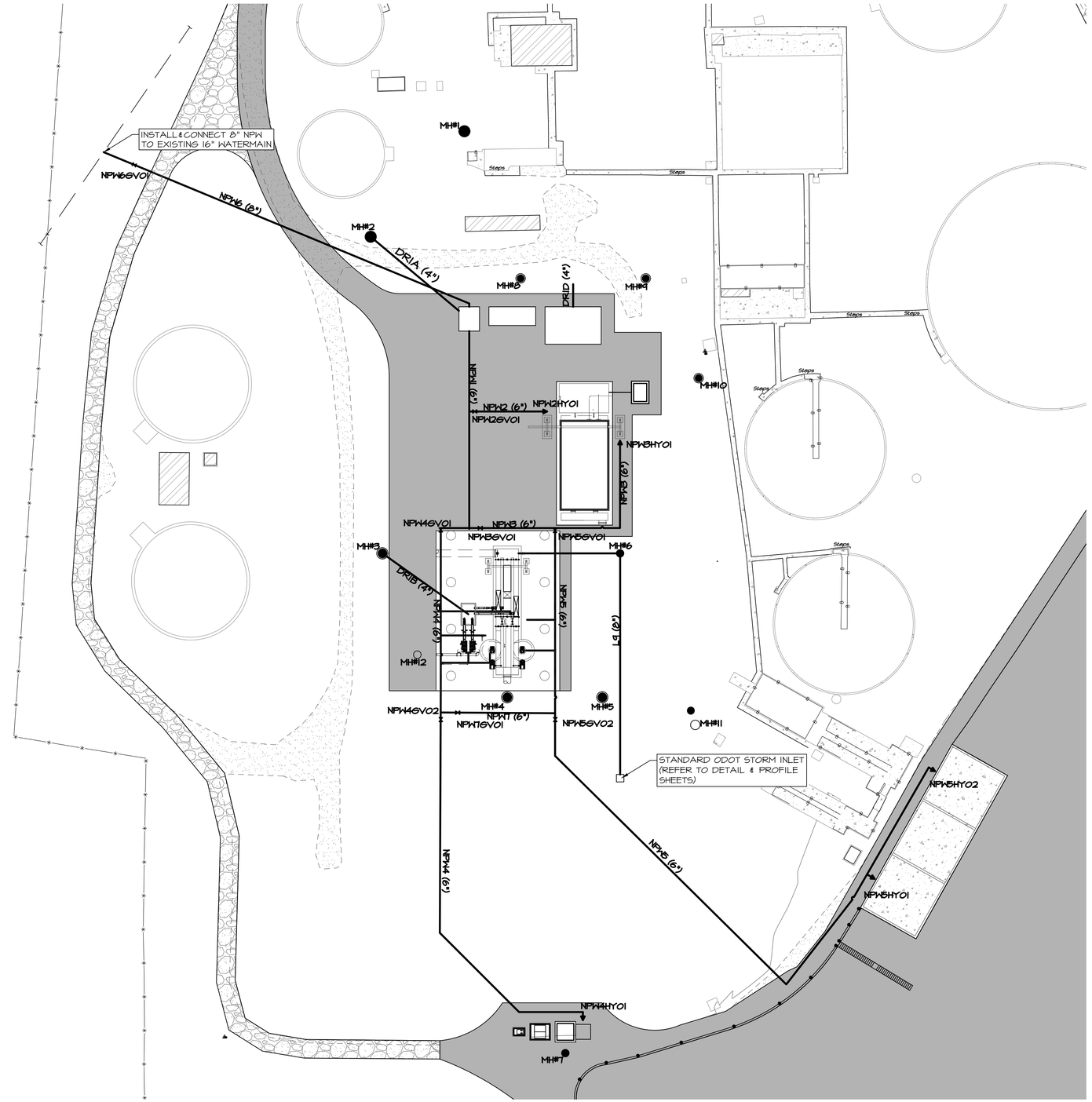

LEGEND

- EXISTING FENCE
- PROPOSED UNIT
- CONCRETE SITE PAVING
- PROPOSED LINE

TYPICAL SYMBOLS

- EXISTING MANHOLE
- PROPOSED MANHOLE
- VALVE W/A.D.I. BOX
- YARD HYDRANT & NON POTABLE SIGN

PIPING LEGEND

L	DI CLASS 250
TMP	SDR-26 PVC
NPW	DI CLASS 250
DR	DI CLASS 250

VALVE SCHEDULE

VALVE I.D.	VALVE TYPE	VALVE SIZE	MOTORIZED
NPW6GV01	GATE	8"	NA
NPW2GV01	GATE	6"	NA
NPW3GV01	GATE	6"	NA
NPW4GV01	GATE	6"	NA
NPW4GV02	GATE	6"	NA
NPW5GV01	GATE	6"	NA
NPW5GV02	GATE	6"	NA
NPW1GV01	GATE	6"	NA

MANHOLE LEGEND

NO.	DIA	TR	GRADE	EFFLUENT FL	INFLUENT FL	NORTHING	EASTING
MH-1	6'	986.00'	985.82'	975.75'	975.88'	724128.3083	2242591.6213
MH-2	6'	986.00'	985.13'	975.15'	975.15'	724071.9286	2242541.5780
MH-3	6'	987.00'	986.47'	974.50'	974.50'	723902.7965	2242541.8356
MH-4	6'	988.00'	987.57'	970.37'	970.37'	723825.8690	2242614.4850
MH-5	6'	986.61'	986.61'	969.94'	969.94'	723825.8690	2242665.2766
MH-6	4'	986.91'	986.91'	975.94'	975.96'	723902.7965	2242674.7766
MH-7	5'	993.00'	993.00'	974.50'	974.75'	723635.7790	2242645.4488
MH-8	5'	987.00'	986.97'	975.24'	975.31'	724044.6753	2242621.5977
MH-9	5'	985.50'	985.10'	975.12'	975.14'	724044.6711	2242688.4419
MH-10	5'	983.00'	983.00'	974.96'	974.98'	723996.3867	2242716.6936
MH-11	5'	981.50'	981.05'	974.52'	974.54'	723811.1231	2242714.9172
MH-12	4'	987.28'	987.28'	983.25'	983.48'	723848.6438	2242566.4850

NOTE:

1. ALL FLOOR DRAINS ROUTED TO MANHOLES SHALL BE EQUIPPED WITH A TRAP TO PREVENT GAS BACKUP. (SEE DETAIL SHEETS)
2. ALL YARD HYDRANTS TO BE PROVIDED WITH SELF-SUPPORTED HOSE RAKE (OR WALL MOUNTED HOSE RACK IF ADJACENT TO WALL).
3. CONTRACTOR TO PROVIDE SEVEN (7) 50' X 2" COMMERCIAL GRADE WASHDOWN HOSES & TWO (2) 100' X 2" COMMERCIAL WASHDOWN HOSES.



WALL ENGINEERING
223 N. WASHINGTON, DURANT, OK 74701
OKLAHOMA CA #5413 EXP. JUNE 30, 2023

SUBMITTAL / REVISIONS:

DATE	BY	SUBMITTAL / REVISION
06/22	TL	ISSUED FOR BIDDING

SHAWNEE MUNICIPAL AUTHORITY
SOUTHSIDE IMPROVEMENTS
SHAWNEE, OKLAHOMA

SECONDARY PIPING PLAN

PROJECT NO.	SHN-20-01
DATE	06/22
DRAWN BY:	TL
CHECKED BY:	BW
REVIEWED BY:	DBW
SCALE:	1"=30'

BAR IS ONE INCH ON ORIGINAL DRAWING
0" 1"
IF NOT ONE INCH ON THIS SHEET, ADJUST SCALES ACCORDINGLY

SHEET

C-15

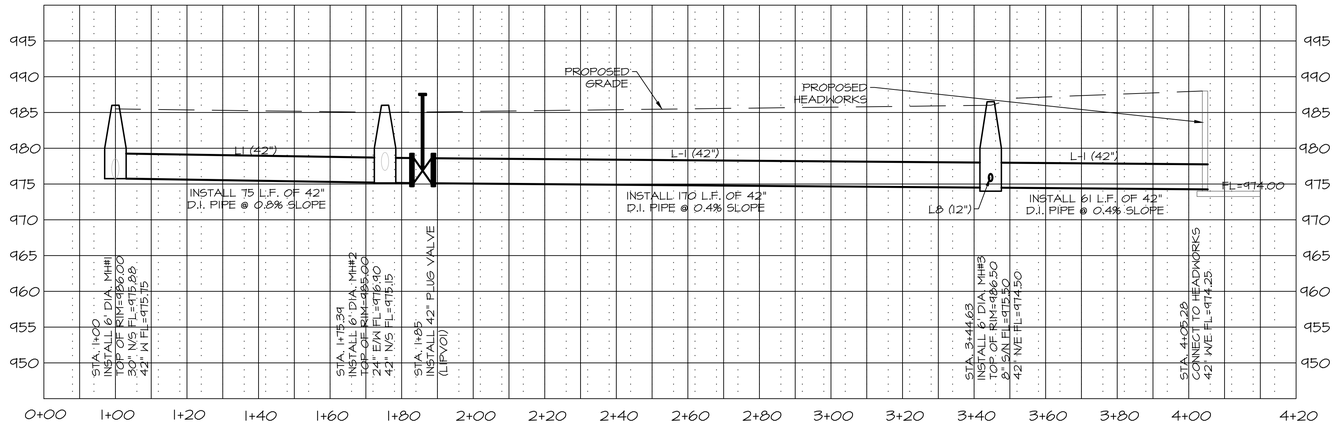

MH#1 TO HEADWORKS L1 (42") PROFILE

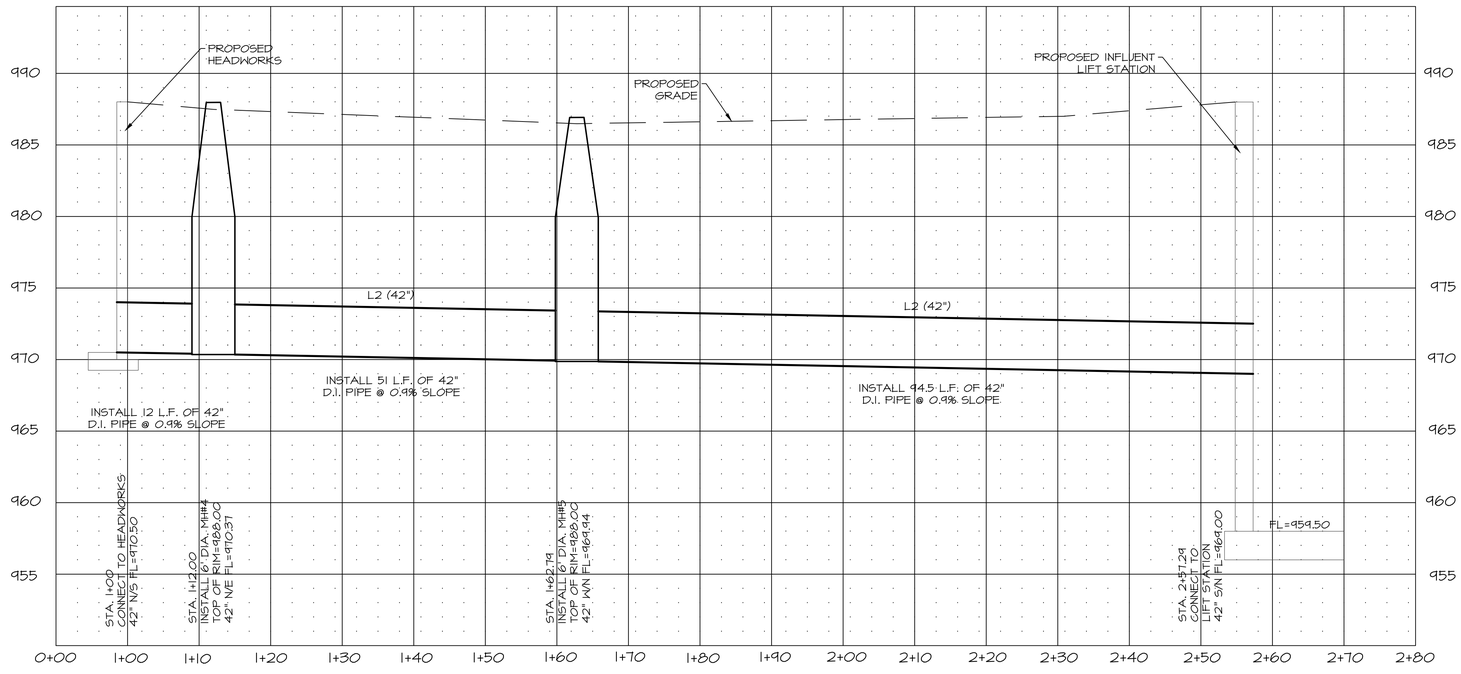

HEADWORKS TO INFLUENT LIFT STATION L2 (42") PROFILE

WALL ENGINEERING
223 N. WASHINGTON, DURANT, OK 74701
OKLAHOMA CA #5413 EXP. JUNE 30, 2023

SUBMITTAL / REVISIONS:

DATE	BY	SUBMITTAL / REVISION
06/22	TL	ISSUED FOR BIDDING

SHAWNEE MUNICIPAL AUTHORITY
SOUTHSIDE IMPROVEMENTS
SHAWNEE, OKLAHOMA

PIPING PROFILE

PROJECT NO.	SHN-20-01
DATE	06/22
DRAWN BY:	TL
CHECKED BY:	BW
REVIEWED BY:	DBW
SCALE:	NOT TO SCALE

BAR IS ONE INCH ON ORIGINAL DRAWING
0" 1"
IF NOT ONE INCH ON THIS SHEET, ADJUST SCALES ACCORDINGLY

REGISTERED PROFESSIONAL ENGINEER
BRANDON WALL
21108
OKLAHOMA

SHEET
C-16

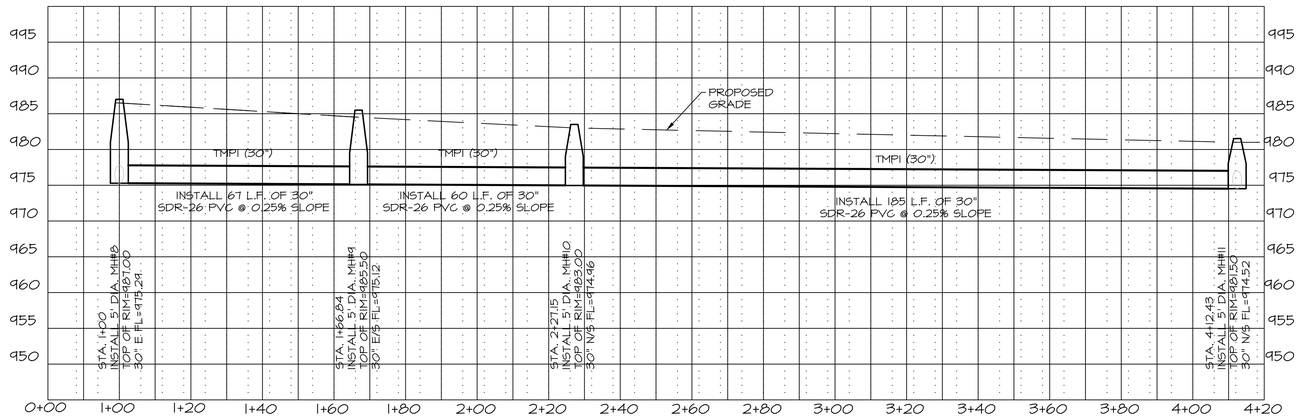

MH#8 TO MH#11 TMPI (30") PROFILE

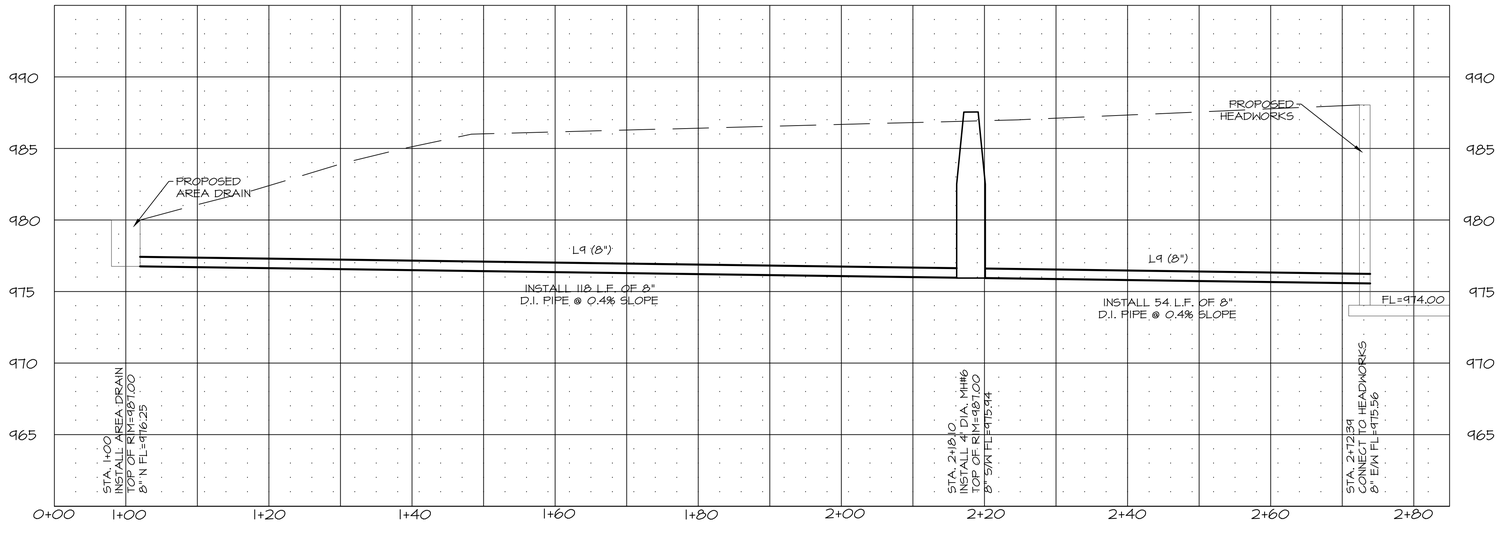

AREA DRAIN TO HEADWORKS L9 (8") PROFILE

WALL ENGINEERING
223 N. WASHINGTON, DURANT, OK 74701
OKLAHOMA CA #5413 EXP. JUNE 30, 2023

SUBMITTAL / REVISIONS:

DATE	BY	SUBMITTAL / REVISION
06/22	TL	ISSUED FOR BIDDING

SHAWNEE MUNICIPAL AUTHORITY
SOUTHSIDE IMPROVEMENTS
SHAWNEE, OKLAHOMA

PIPING PROFILE

PROJECT NO.
SHN-20-01
DATE
06/22
DRAWN BY:
TL
CHECKED BY:
BW
REVIEWED BY:
DBW
SCALE:
NOT TO SCALE

BAR IS ONE INCH ON ORIGINAL DRAWING
0" 1"
IF NOT ONE INCH ON THIS SHEET, ADJUST SCALES ACCORDINGLY

REGISTERED PROFESSIONAL ENGINEER
06/21/22
BRANDON WALL
21108
OKLAHOMA

SHEET
C-16A

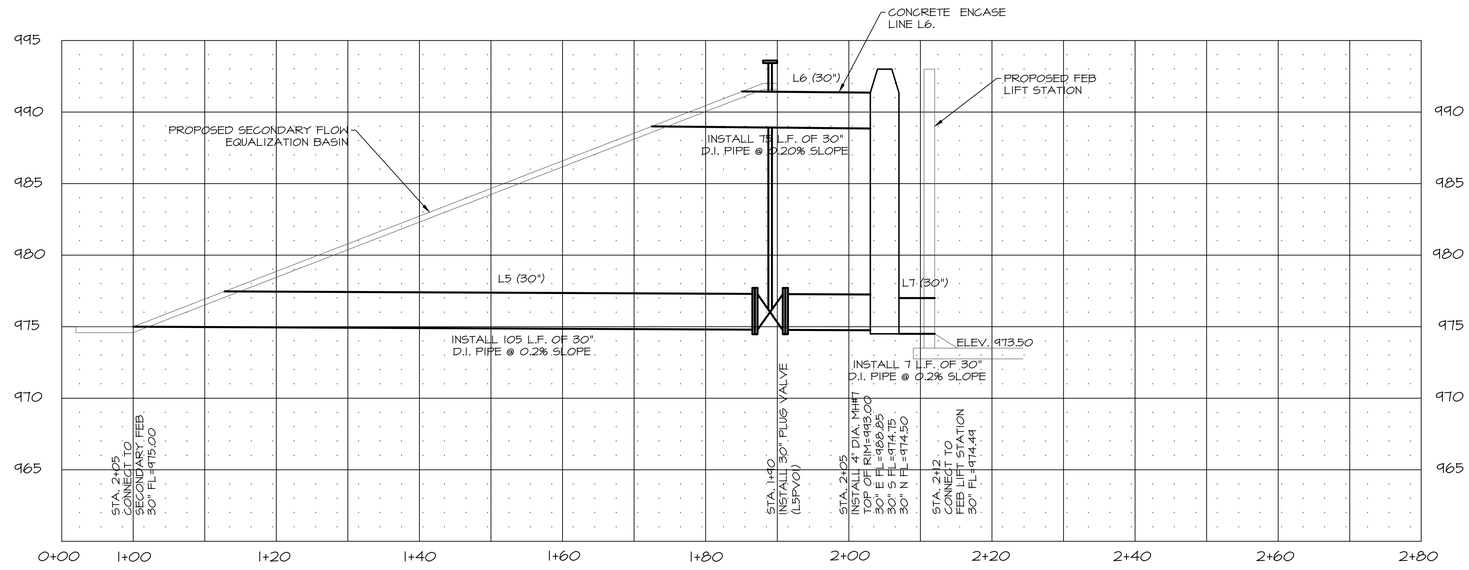

SECONDARY EQUALIZATION BASIN TO RETURN LIFT STATION L5&L6 (30") PROFILE



WALL ENGINEERING
223 N. WASHINGTON, DURANT, OK 74701
OKLAHOMA CA #5413 EXP. JUNE 30, 2023

SUBMITTAL / REVISIONS:

DATE	BY	SUBMITTAL / REVISION
06/22	TL	ISSUED FOR BIDDING

SHAWNEE MUNICIPAL AUTHORITY
SOUTHSIDE IMPROVEMENTS
SHAWNEE, OKLAHOMA

PIPING PROFILE

PROJECT NO.
SHN-20-01

DATE
06/22

DRAWN BY:
TL

CHECKED BY:
BW

REVIEWED BY:
DBW

SCALE:
NOT TO SCALE

BAR IS ONE INCH ON ORIGINAL DRAWING
0" 1"
IF NOT ONE INCH ON THIS SHEET, ADJUST SCALES ACCORDINGLY

SHEET
C-16B

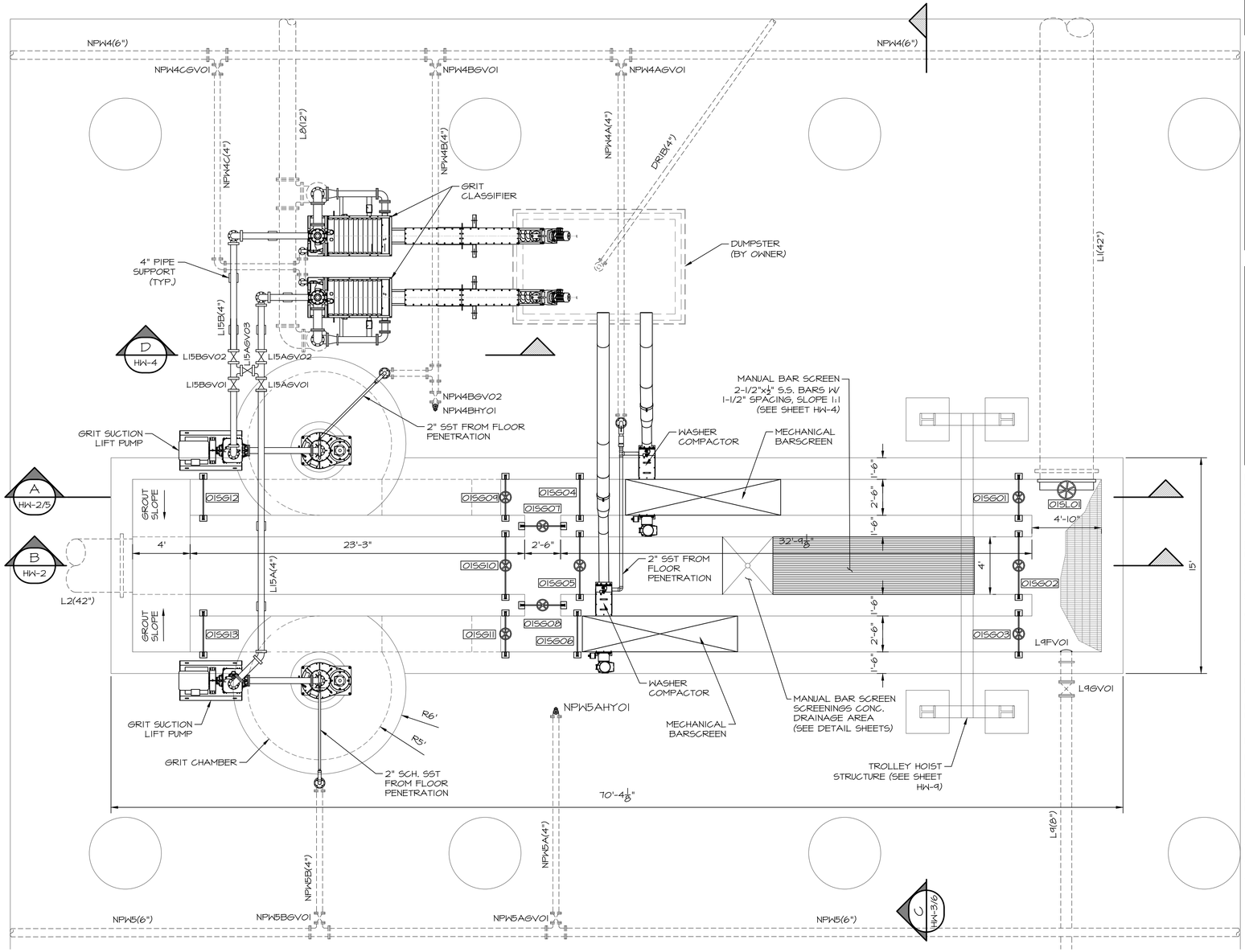



316L SS GATE SCHEDULE

GATE IDENTIFICATION	015L01	015G01	015G02	015G03	015G04
GATE TYPE	SLUICE	CHANNEL	CHANNEL	CHANNEL	SLIDE
GATE SIZE	42" Φ	30"x18"	48"x60"	30"x18"	30"x60"
GATE SERIES	924	921	921	921	500
MOUNTING - FRAME	CW	FE	FE	FE	FE
MOUNTING - INVERT	EMBEDED	EMBEDED	EMBEDED	EMBEDED	EMBEDED
HOIST REQUIREMENT					
A. MANUAL	HC	HC	HC	HC	N/A
B. ELECTRIC	YES	YES	YES	YES	NO
C. STEM COVER	GS	GS	GS	GS	N/A
D. POSITION COVER	MYLAR	MYLAR	MYLAR	MYLAR	N/A
E. STEM CONFIGURATION	RISING	RISING	RISING	RISING	N/A
LIFT MOUNTING	YOKE	YOKE	YOKE	YOKE	N/A
LEAKAGE STANDARD	AWWA	AWWA	AWWA	AWWA	AWWA
OPERATING FLOOR ELEV.	988.00'	988.00'	988.00'	988.00'	988.00'
INVERT ELEV.	974.00'	974.00'	974.00'	974.00'	974.00'

316L SS GATE SCHEDULE

GATE IDENTIFICATION	015G05	015G06	015G07	015G08	015G09
GATE TYPE	CHANNEL	SLIDE	CHANNEL	CHANNEL	CHANNEL
GATE SIZE	48"x60"	30"x60"	30"x18"	30"x18"	30"x18"
GATE SERIES	921	500	921	921	921
MOUNTING - FRAME	FE	FE	FE	FE	FE
MOUNTING - INVERT	EMBEDED	EMBEDED	EMBEDED	EMBEDED	EMBEDED
HOIST REQUIREMENT					
A. MANUAL	HC	HC	HC	HC	HC
B. ELECTRIC	YES	NO	NO	NO	NO
C. STEM COVER	GS	N/A	GS	GS	GS
D. POSITION COVER	MYLAR	N/A	MYLAR	MYLAR	MYLAR
E. STEM CONFIGURATION	RISING	N/A	RISING	RISING	RISING
LIFT MOUNTING	YOKE	N/A	YOKE	YOKE	YOKE
LEAKAGE STANDARD	AWWA	AWWA	AWWA	AWWA	AWWA
OPERATING FLOOR ELEV.	988.00'	988.00'	988.00'	988.00'	988.00'
INVERT ELEV.	974.00'	974.00'	974.00'	974.00'	974.00'

316L SS GATE SCHEDULE

GATE IDENTIFICATION	015G10	015G11	015G12	015G13
GATE TYPE	CHANNEL	CHANNEL	SLIDE	SLIDE
GATE SIZE	48"x60"	30"x18"	30"x60"	30"x60"
GATE SERIES	921	921	500	500
MOUNTING - FRAME	FE	FE	FE	FE
MOUNTING - INVERT	EMBEDED	EMBEDED	EMBEDED	EMBEDED
HOIST REQUIREMENT				
A. MANUAL	HC	HC	HC	N/A
B. ELECTRIC	YES	NO	YES	NO
C. STEM COVER	GS	GS	GS	N/A
D. POSITION COVER	MYLAR	MYLAR	MYLAR	N/A
E. STEM CONFIGURATION	RISING	RISING	RISING	N/A
LIFT MOUNTING	YOKE	YOKE	YOKE	N/A
LEAKAGE STANDARD	AWWA	AWWA	AWWA	AWWA
OPERATING FLOOR ELEV.	988.00'	988.00'	988.00'	988.00'
INVERT ELEV.	974.00'	974.00'	974.00'	974.00'

INDEX
FE: EMBEDDED FRAME
HC: HAND CRANK
GS: GALVANIZED STEEL
CW: CHANNEL WALL
SQN: SQUARE NUT

NOTES:
1. ALL ABOVE GRADE PIPING AND FITTINGS 4" AND SMALLER SHALL BE 316 SST (GR).
2. USE VICTAULIC FITTINGS AS REQUIRED.
3. GATE WIDTHS LISTED ARE NOMINAL
4. CONTRACTOR SHALL ADJUST LOCATION OF GRIT WASHER CONVEYER TO ALLOW FOR USE OF ONE DUMPSTER.
5. THERE SHALL NOT BE ANY GRATING OVER GATES WHICH WOULD INTERFERE WITH OPERATION.
6. ALL EXPOSED PIPING SHALL BE FREEZE PROTECTED BY HEAT TRACE AND INSULATED.
7. GRIT PUMPS SHALL BE EQUIPPED WITH CASE HEATING AND FREEZE PROTECTION PER MANUFACTURERS RECOMMENDATIONS.
8. PW WATER CONNECTION TO EQUIPMENT SHALL BE INSTALLED WITH CONNECTION SOLENOID VALVE SUPPLIED BY MANUFACTURER. FIELD ROUTE ELECTRICAL/CONTROLS PER MANUFACTURERS RECOMMENDATIONS.
9. CONTRACTOR SHALL VERIFY WITH OWNER DUMPSTER DIMENSIONING PRIOR TO PLACEMENT OF CLASSIFIER/COMPACTOR DISCHARGE OUTLETS.
10. ALL PIPING AND CONNECTIONS SHALL BE PER MANUFACTURERS RECOMMENDATIONS.
11. ALL ELECTRONICALLY ACTUATED VALVES TO ALSO BE EQUIPPED WHANDWHEEL OPERATORS.
12. SLIDE GATES TO BE MOUNTED PER MANUFACTURERS RECOMMENDATIONS.
13. CONTRACTOR TO INSTALL A 2" RADIUS FILLET BEFORE AND AFTER THE SCREENS TO PREVENT SEDIMENTATION OF SOLIDS. CONTRACTOR SHALL VERIFY WITH MFR. THAT APPROPRIATE CHANNEL VELOCITY WILL BE MAINTAINED.
14. ACTUATED SLIDE GATE EMERGENCY FLOAT TO AUTOMATICALLY CLOSE GATE IN THE EVENT WATER RISES TO HEADWORKS FLOOR.
15. AT CONTRACTORS OPTION, FLOOR OF HEADWORKS MAY BE POURED LEVEL AT ELEVATION GROUTED TO PROPOSED FLOW LINE ELEVATION.
16. COORDINATE LOCATIONS FOR REQUIRED WASH WATER NON POTABLE WATER MAINS WITH HEADWORKS EQUIPMENT SUPPLIER PRIOR TO INSTALLATION.
17. ELECTRONICALLY OPERATED GATE SHALL BE 480 VOLTS/3 PHASE.
18. CONTRACTOR SHALL SUBMIT A COMPLETE PIPING PLAN FOR APPROVAL.
19. CONTRACTOR SHALL PROVIDE PIPING SUPPORTS AS NEEDED REGARDLESS OF BEING SHOWN ON DRAWINGS.
20. ALL OPEN AREAS OF HEADWORKS STRUCTURE ARE TO RECEIVE GRATING. SOME GRATING IS NOT SHOWN FOR CLARITY.
21. COORDINATE WITH EQUIPMENT SUPPLIER FOR EXACT REQUIREMENTS OF INLET WATER PIPING PRIOR TO BID.
22. EQUIPMENT DRAINS NOT SHOWN IN PIPING SHALL BE FIELD ROUTED TO HEADWORKS CHANNELS PER MANUFACTURER RECOMMENDATIONS.
23. ENTIRE SUSTEM SHALL BE EQUIPPED WITH A FACTORY DESIGNED FREEZE PROTECTION SYSTEM CONSISTING OF HEAT TAPE, CASE HEATERS AND INSULATION. FREEZE PROTECTION SYSTEM SHALL BE DESIGNED TO ENSURE PROPER OPERATION INDEFINITELY AT -15 DEGREES FAHRENHEIT. PROVIDE INFORMATION ON FREEZE PROTECTION SYSTEM WITH THE EQUIPMENT SUBMITTAL.
24. ALL EXPOSED PIPING IN HEADWORKS AREA 6" AND SMALLER TO BE GROOVED 316 STAINLESS STEEL. COMPLETE SYSTEM TO BE DESIGNED AND PROVIDED BY VICTAULIC.

WALL ENGINEERING
223 N. WASHINGTON, DURANT, OK 74701
OKLAHOMA CA #5413 EXP. JUNE 30, 2023

SUBMITTAL / REVISIONS:

	DATE	BY	SUBMITTAL / REVISION
1	06/22	TL	ISSUED FOR BIDDING

SHAWNEE MUNICIPAL AUTHORITY
SOUTHSIDE IMPROVEMENTS
SHAWNEE, OKLAHOMA

INFLUENT BARSCREEN AND GRIT REMOVAL
HEADWORKS PLAN VIEW

PROJECT NO. SHN-20-01
DATE 06/22
DRAWN BY: TL
CHECKED BY: BW
REVIEWED BY: DBW
SCALE: 1/4"=1'-0"

BAR IS ONE INCH ON ORIGINAL DRAWING
0' 1'
IF NOT ONE INCH ON THIS SHEET, ADJUST SCALES ACCORDINGLY

SHEET
HW-1

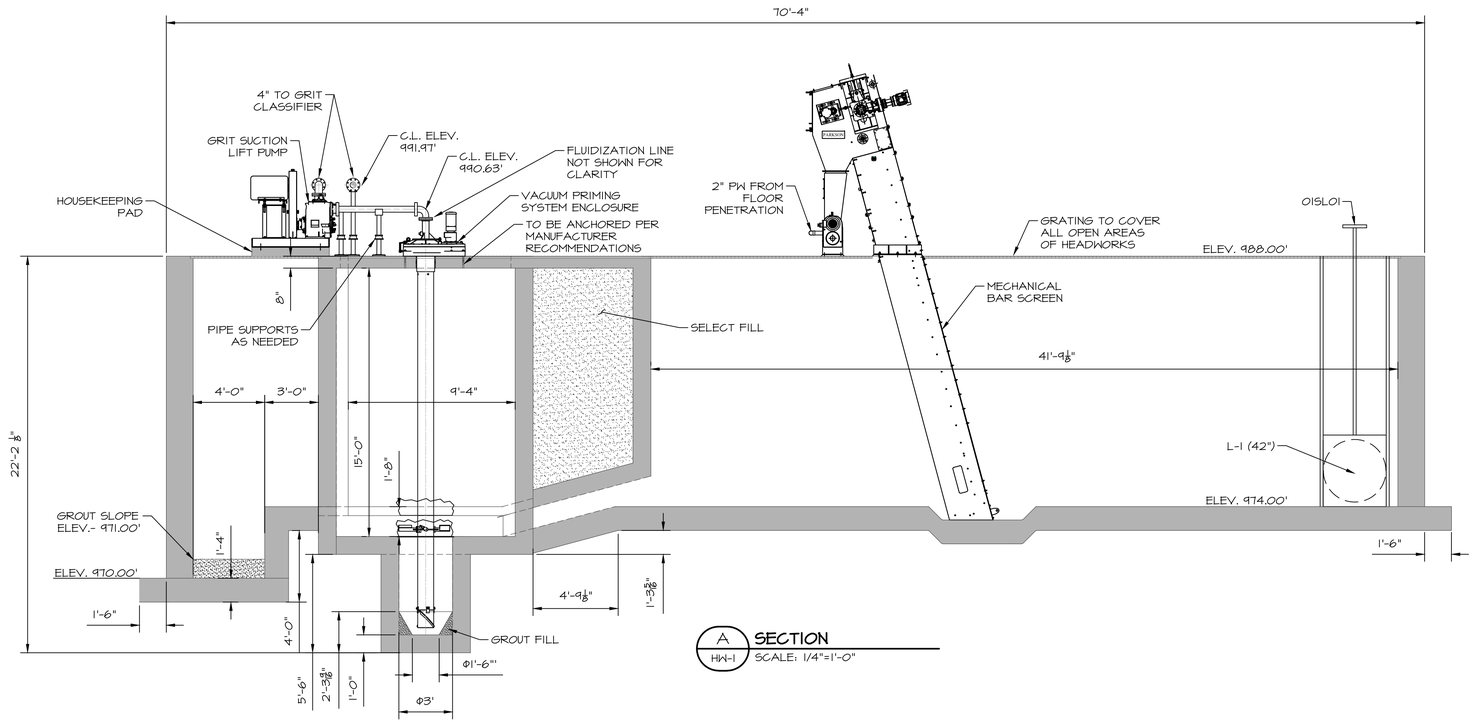

A / HW-1 SECTION
SCALE: 1/4"=1'-0"

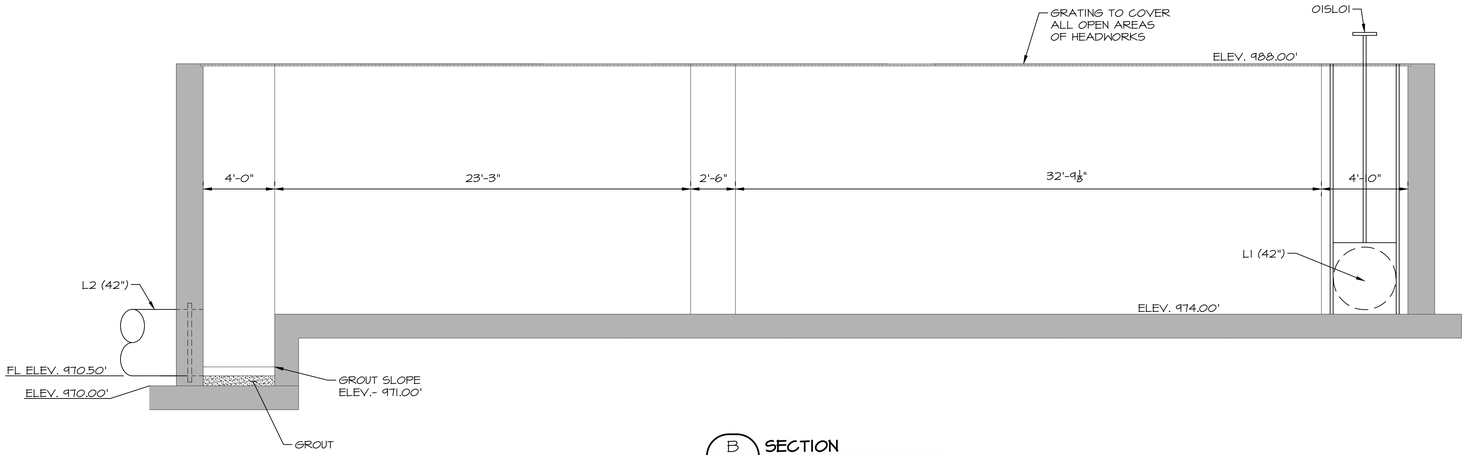

B / HW-1 SECTION
SCALE: 1/4"=1'-0"



WALL ENGINEERING
223 N. WASHINGTON, DURANT, OK 74701
OKLAHOMA CA #5413 EXP. JUNE 30, 2023

SUBMITTAL / REVISIONS:

DATE	BY	SUBMITTAL / REVISION
06/22	TL	ISSUED FOR BIDDING

SHAWNEE MUNICIPAL AUTHORITY
SOUTHSIDE IMPROVEMENTS
SHAWNEE, OKLAHOMA

INFLUENT BARSCREEN AND GRIT REMOVAL
MECHANICAL SECTION VIEW

PROJECT NO.	SHN-20-01
DATE	06/22
DRAWN BY:	TL
CHECKED BY:	BW
REVIEWED BY:	DBW
SCALE:	1/4"=1'-0"

BAR IS ONE INCH ON ORIGINAL DRAWING
0' 1'
IF NOT ONE INCH ON THIS SHEET, ADJUST SCALES ACCORDINGLY

SHEET
HW-2

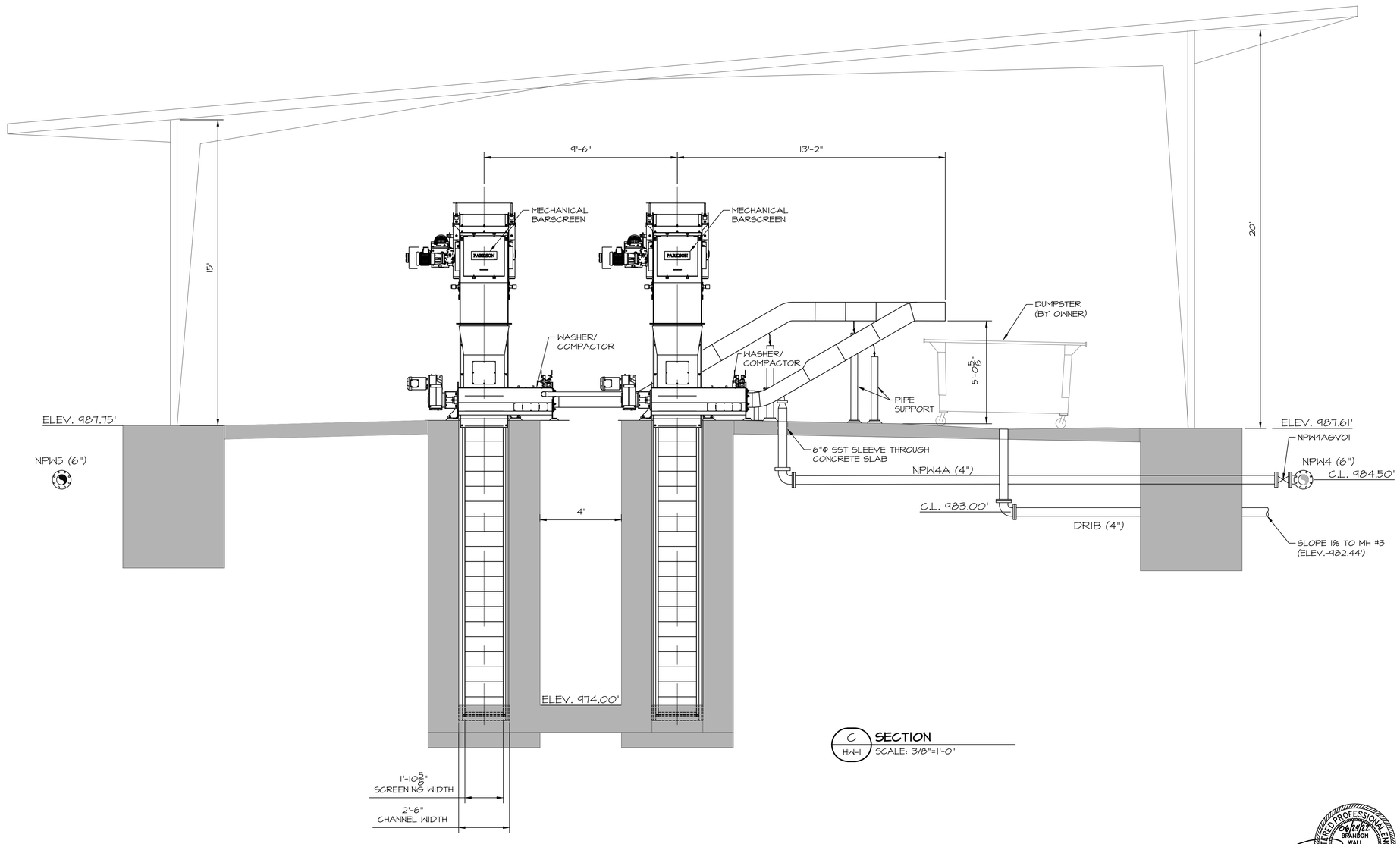

C HW-1 SECTION
SCALE: 3/8"=1'-0"

REGISTERED PROFESSIONAL ENGINEER
06/24/22
BRANDON WALL
21108
OKLAHOMA

WALL ENGINEERING
223 N. WASHINGTON, DURANT, OK 74701
OKLAHOMA CA #5413 EXP. JUNE 30, 2023

SUBMITTAL / REVISIONS:

DATE	BY	SUBMITTAL / REVISION
06/22	TL	ISSUED FOR BIDDING

SHAWNEE MUNICIPAL AUTHORITY
SOUTHSIDE IMPROVEMENTS
SHAWNEE, OKLAHOMA

INFLUENT BARSCREEN AND GRIT REMOVAL
MECHANICAL SECTION VIEW

PROJECT NO.
SHN-20-01
DATE
06/22
DRAWN BY:
TL
CHECKED BY:
BW
REVIEWED BY:
DBW
SCALE:
3/8"=1'-0"

BAR IS ONE INCH ON ORIGINAL DRAWING
0' 1'
IF NOT ONE INCH ON THIS SHEET, ADJUST SCALES ACCORDINGLY

SHEET
HW-3

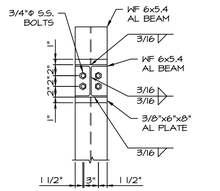

CONNECTION DETAIL
SCALE: NOT TO SCALE

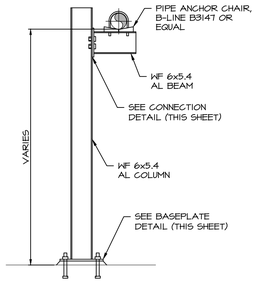

PIPE SUPPORT DETAIL
SCALE: NOT TO SCALE

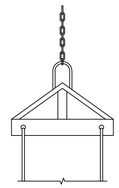

SCREEN LIFTING HARNESS
SCALE: NOT TO SCALE

NOTES:
TO BE SUPPLIED BY SCREEN MANUFACTURER.

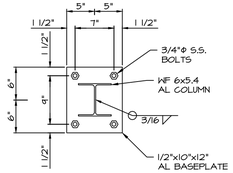

BASE PLATE DETAIL
SCALE: NOT TO SCALE

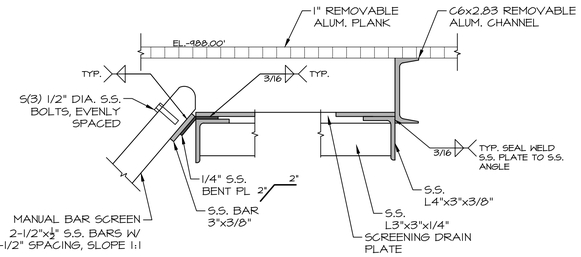

MANUAL BAR SCREEN SUPPORT DETAIL
SCALE: NOT TO SCALE

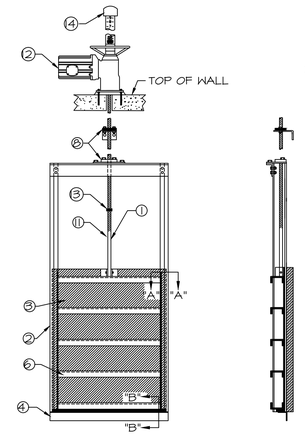

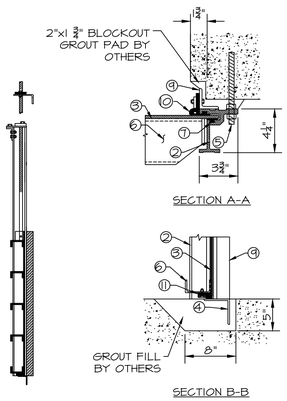

NO.	DESCRIPTION	NO.	DESCRIPTION
①	STEM	⑧	STEM GUIDE, W UHMW BUSHING
②	GUIDE RAIL	⑨	P-SEAL MEMBER
③	GATE HEAD	⑩	P-SEAL, NEOPRENE
④	INVERT MEMBER	⑪	INVERT SEAL, NEOPRENE RUBBER
⑤	ANCHOR BOLTS	⑫	ELECTRIC MOTOR OPERATOR
⑥	STIFFENER	⑬	STOP NUTS
⑦	GUIDE BEARING BAR, UHMW	⑭	STEM COVER

SST FACE MOUNTED SLIDE GATE DETAIL
SCALE: NOT TO SCALE

NOTES:
1. PROVIDE STEM GUIDES, MAXIMUM OF 5' INTERVALS.
2. PROVIDE 7" WALL ANCHORS FOR GUIDES.
3. PROVIDE SUPPORT STRUCTURE FOR OPERATOR BASED ON INSTALL LOCATION PER MANUFACTURES GUIDELINES.

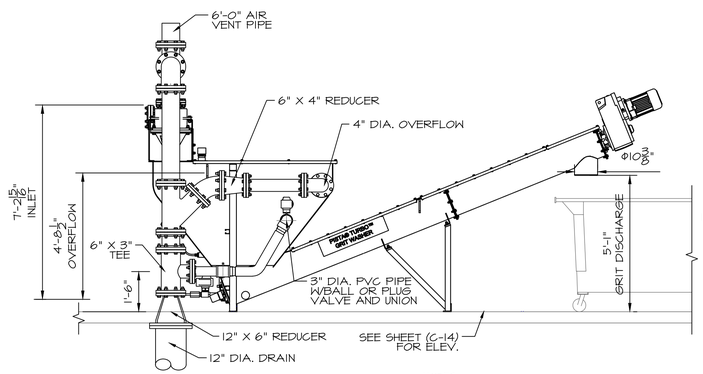

NOTES:
1. GRIT WASHER SHALL BE RATED FOR 110 GPM
2. THE PROJECTED SEPARATOR PLATES SETTLING AREA SHALL BE 15.1 SQ. FT.
3. COVER SHALL BE PROVIDED FOR THE HOPPER AND TROUGH OPENINGS.
4. THE OVERFLOW SHALL BE A FREE DISCHARGE W/O WATER BACKUP
5. ALL PIPE SIZES SHALL BE AS PER MANUFACTURERS RECOMMENDATIONS.

D HW-1 GRIT CLASSIFIER SECTION
SCALE: 1/2"=1'-0"

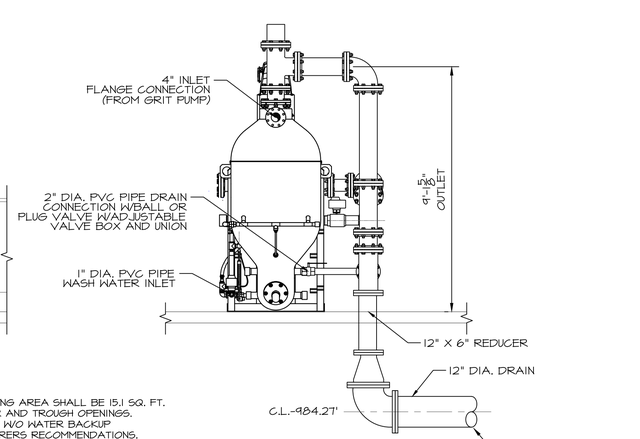

GRIT CLASSIFIER END SECTION
SCALE: 1/2"=1'-0"

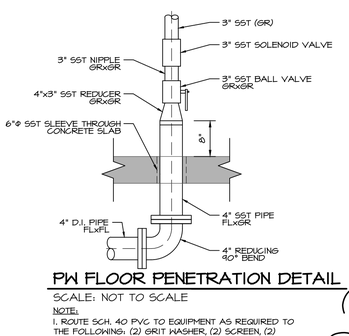

PW FLOOR PENETRATION DETAIL
SCALE: NOT TO SCALE

NOTE:
1. ROUTE SCH. 40 PVC TO EQUIPMENT AS REQUIRED TO THE FOLLOWING: (2) GRIT WASHER, (2) SCREEN, (2) FLUIDIZATION



WALL ENGINEERING
223 N. WASHINGTON, DURANT, OK 74701
OKLAHOMA CA #5413 EXP. JUNE 30, 2023

SUBMITTAL / REVISIONS:

NO.	DATE	BY	SUBMITTAL / REVISION
	06/22	TL	ISSUED FOR BIDDING

SHAWNEE MUNICIPAL AUTHORITY
SOUTHSIDE IMPROVEMENTS
SHAWNEE, OKLAHOMA

INFLUENT BARSCREEN AND GRIT REMOVAL MECHANICAL SECTION VIEWS AND DETAILS

PROJECT NO.
SHN-20-01
DATE
06/22
DRAWN BY:
TL
CHECKED BY:
BW
REVIEWED BY:
DBW
SCALE:
AS SHOWN

BAR IS ONE INCH ON ORIGINAL DRAWING
0" 1"
IF NOT ONE INCH ON THIS SHEET, ADJUST SCALES ACCORDINGLY

SHEET
HW-4

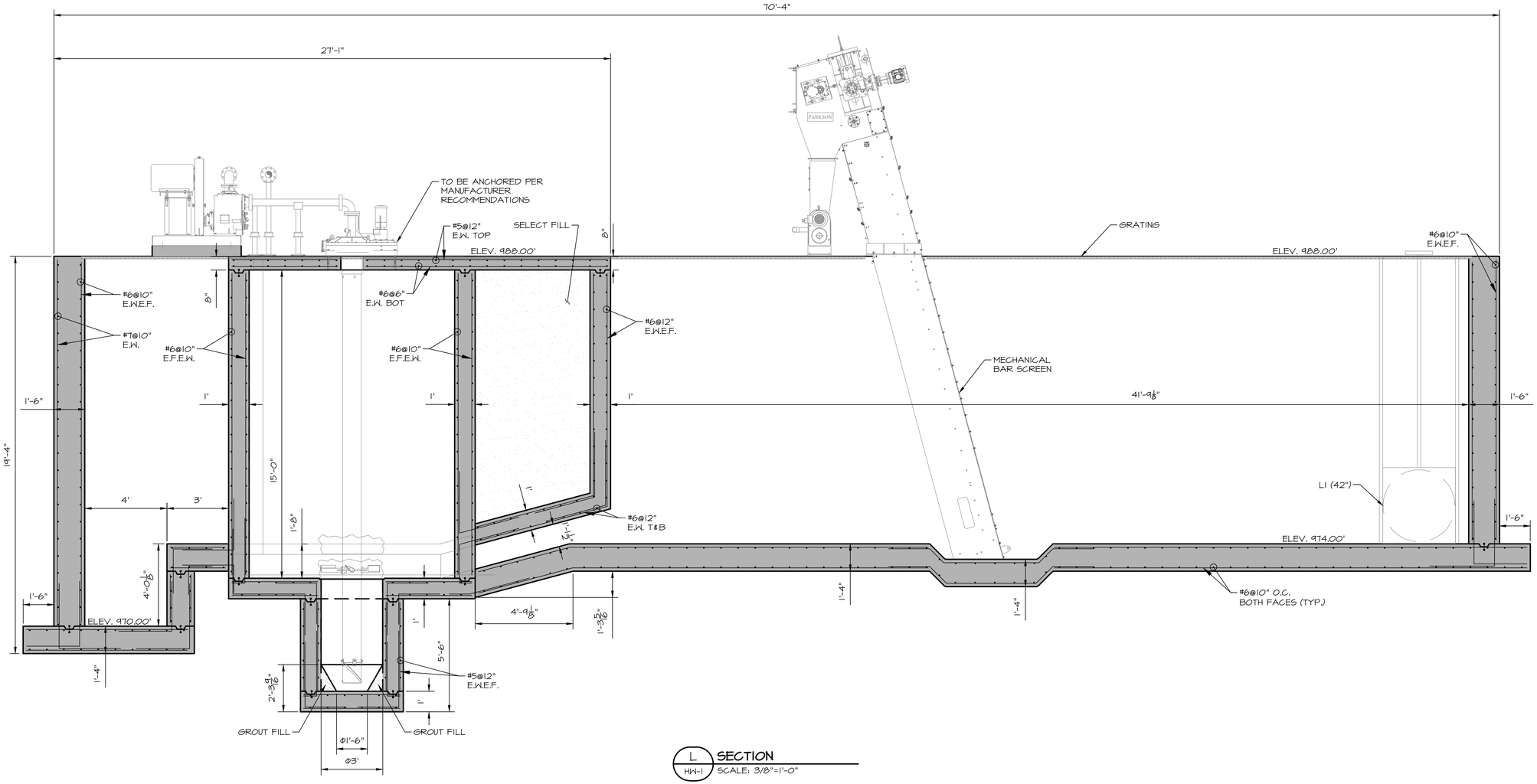

L / HW-1 SECTION
SCALE: 3/8"=1'-0"



WALL ENGINEERING
223 N. WASHINGTON, DURANT, OK 74701
OKLAHOMA CA #5413 EXP. JUNE 30, 2023

SUBMITTAL / REVISIONS:

SUBMITTAL / REVISION	BY	DATE
ISSUED FOR BIDDING	TL	06/22

SHAWNEE MUNICIPAL AUTHORITY
SOUTHSIDE IMPROVEMENTS
SHAWNEE, OKLAHOMA

INFLUENT BARSCREEN AND GRIT REMOVAL
STRUCTURAL SECTION VIEW

PROJECT NO.	SHN-20-01
DATE	06/22
DRAWN BY:	TL
CHECKED BY:	BW
REVIEWED BY:	DBW
SCALE:	3/8"=1'-0"

BAR IS ONE INCH ON ORIGINAL DRAWING
0" 1"
IF NOT ONE INCH ON THIS SHEET, ADJUST SCALES ACCORDINGLY

SHEET
HW-5

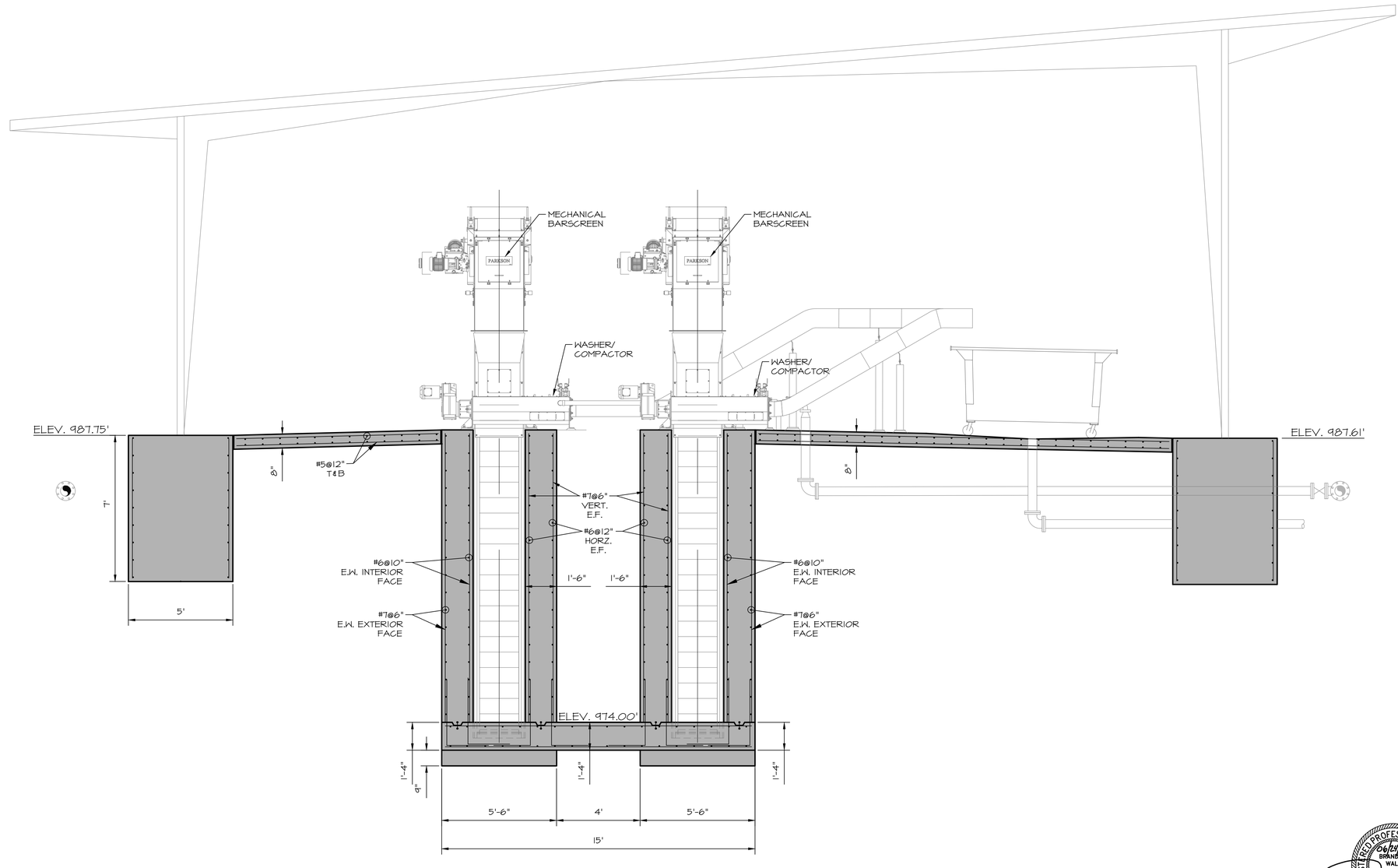

M / HW-1 SECTION
SCALE: 3/8"=1'-0"



WALL ENGINEERING

223 N. WASHINGTON, DURANT, OK 74701
OKLAHOMA CA #5413 EXP. JUNE 30, 2023

SUBMITTAL / REVISIONS:

DATE	BY	SUBMITTAL / REVISION
06/22	TL	ISSUED FOR BIDDING

SHAWNEE MUNICIPAL AUTHORITY
SOUTHSIDE IMPROVEMENTS
SHAWNEE, OKLAHOMA

INFLUENT BARSCREEN AND GRIT REMOVAL
STRUCTURAL SECTION VIEW

PROJECT NO.
SHN-20-01

DATE
06/22

DRAWN BY:
TL

CHECKED BY:
BW

REVIEWED BY:
DBW

SCALE:
3/8"=1'-0"

BAR IS ONE INCH ON ORIGINAL DRAWING
0' 1'
IF NOT ONE INCH ON THIS SHEET, ADJUST SCALES ACCORDINGLY

SHEET

HW-6

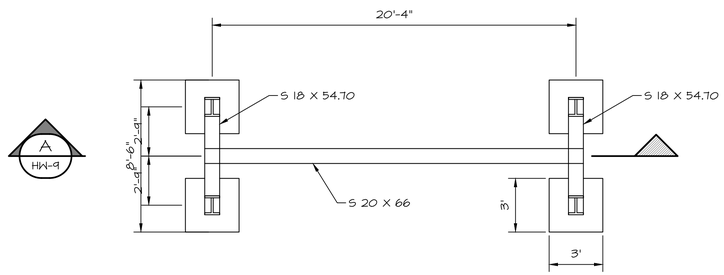

A
HW-9

TROLLEY HOIST STRUCTURE PLAN VIEW

SCALE: 1/4""=1'-0"

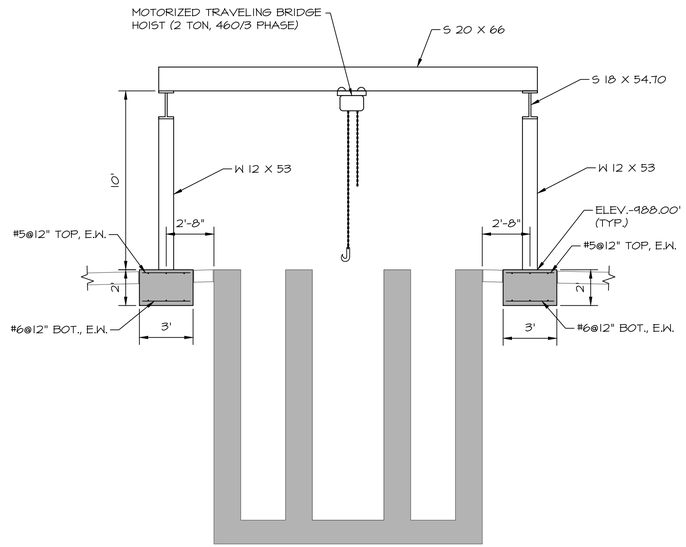

A
HW-9

HOIST SYSTEM SECTION VIEW

SCALE: 1/4""=1'-0"

NOTES:

1. MOTORIZED HOIST SYSTEM TO BE P.E. STAMPED PRE-ENGINEERED SYSTEM FURNISHED COMPLETE BY ONE (1) MANUFACTURER. (SUBMITTAL REQUIRED)

2. ALL EXPOSED STRUCTURAL MEMBERS OF RIGID FRAME METAL BUILDING SHALL BE GALVANIZED.

REGISTERED PROFESSIONAL ENGINEER
06/21/22
BRANDON WALL
21108
OKLAHOMA

WALL ENGINEERING

223 N. WASHINGTON, DURANT, OK 74701
OKLAHOMA CA #5413 EXP. JUNE 30, 2023

SUBMITTAL / REVISIONS:

DATE	BY	SUBMITTAL / REVISION
06/22	TL	ISSUED FOR BIDDING

SHAWNEE MUNICIPAL AUTHORITY
SOUTHSIDE IMPROVEMENTS
SHAWNEE, OKLAHOMA

INFLUENT BAR SCREEN AND GRIT REMOVAL
HOIST SYSTEM PLAN AND ELEVATION

PROJECT NO.
SHN-20-01

DATE
06/22

DRAWN BY:
TL

CHECKED BY:
BW

REVIEWED BY:
DBW

SCALE:
1/4"=1'-0"

BAR IS ONE INCH ON ORIGINAL DRAWING
0' 1'
IF NOT ONE INCH ON THIS SHEET, ADJUST SCALES ACCORDINGLY

SHEET

HW-6A

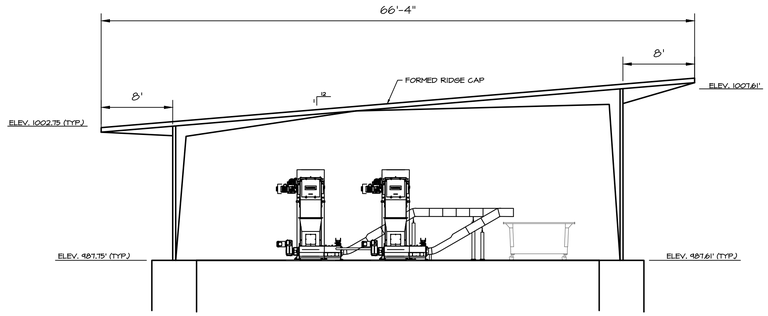

NORTH ELEVATION VIEW

SCALE: 1/8"=1'-0"

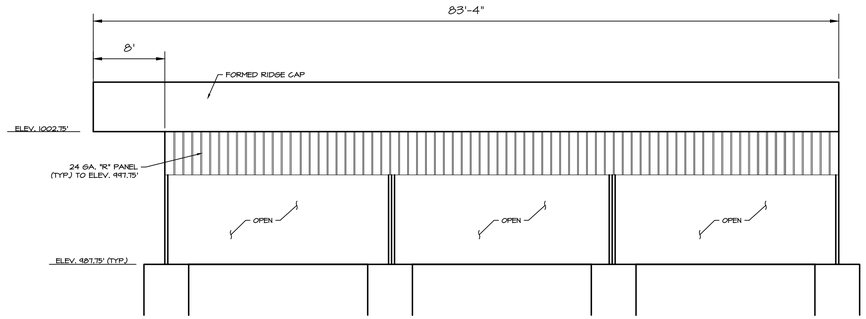

EAST ELEVATION VIEW

SCALE: 1/8"=1'-0"

NOTE:
1. RIGID FRAME CANOPY SYSTEM TO BE A COMPLETE PRE-ENGINEERED STRUCTURE STAMPED BY A OKLAHOMA STRUCTURAL ENGINEER (S.E.).
2. ALL COMPONENTS TO BE GALVANIZED.

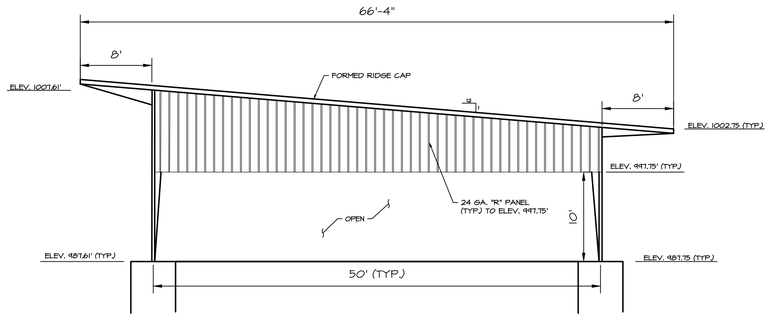

SOUTH ELEVATION VIEW

SCALE: 1/8"=1'-0"

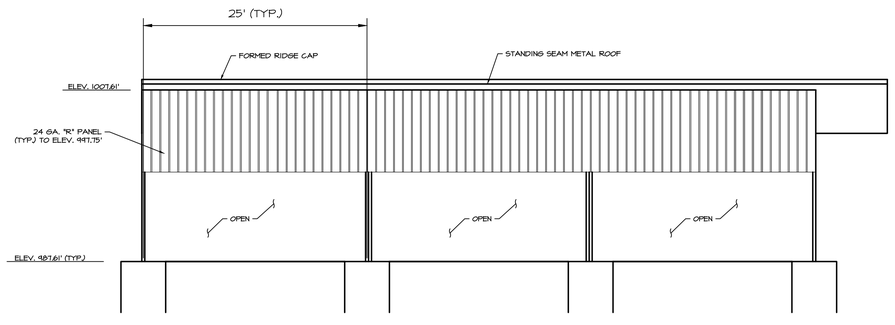

WEST ELEVATION VIEW

SCALE: 1/8"=1'-0"



WALL ENGINEERING
223 N. WASHINGTON, DURANT, OK 74701
OKLAHOMA CA #5413 EXP. JUNE 30, 2023

SUBMITTAL / REVISIONS:

DATE	BY	SUBMITTAL / REVISION
06/22	TL	ISSUED FOR BIDDING

SHAWNEE MUNICIPAL AUTHORITY
SOUTHSIDE IMPROVEMENTS
SHAWNEE, OKLAHOMA

HEADWORKS CANOPY
ELEVATION VIEWS

PROJECT NO.
SHN-20-01

DATE
06/22

DRAWN BY:
TL

CHECKED BY:
BW

REVIEWED BY:
DBW

SCALE:
1/8"=1'-0"

BAR IS ONE INCH ON ORIGINAL DRAWING
0" 1"
IF NOT ONE INCH ON THIS SHEET, ADJUST SCALES ACCORDINGLY

SHEET

HW-7

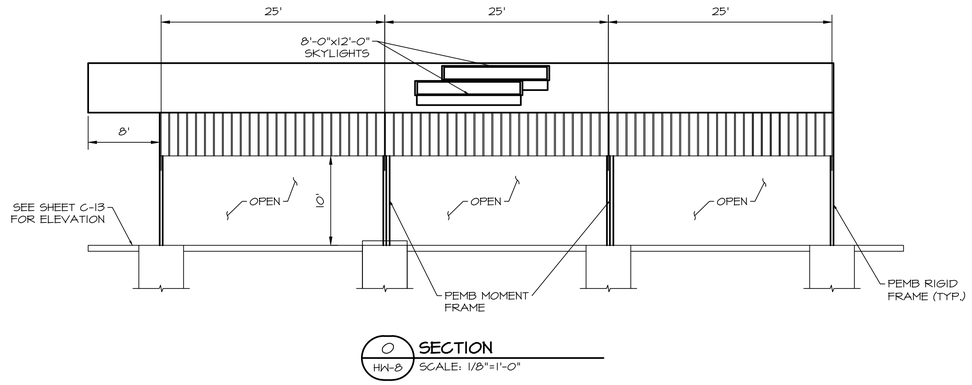

O
HW-8
SECTION
SCALE: 1/8"=1'-0"

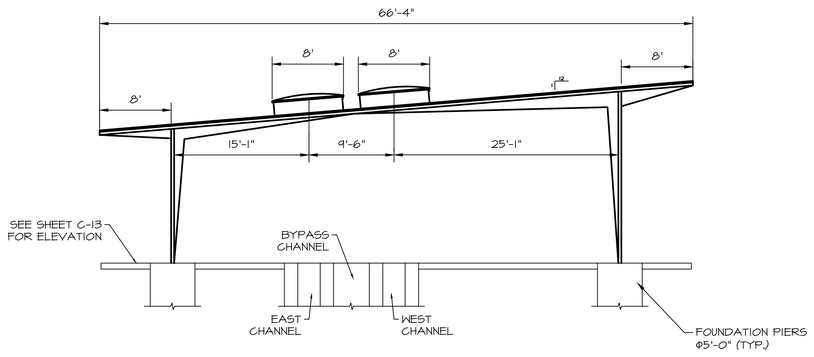

P
HW-8
SECTION
SCALE: 1/8"=1'-0"

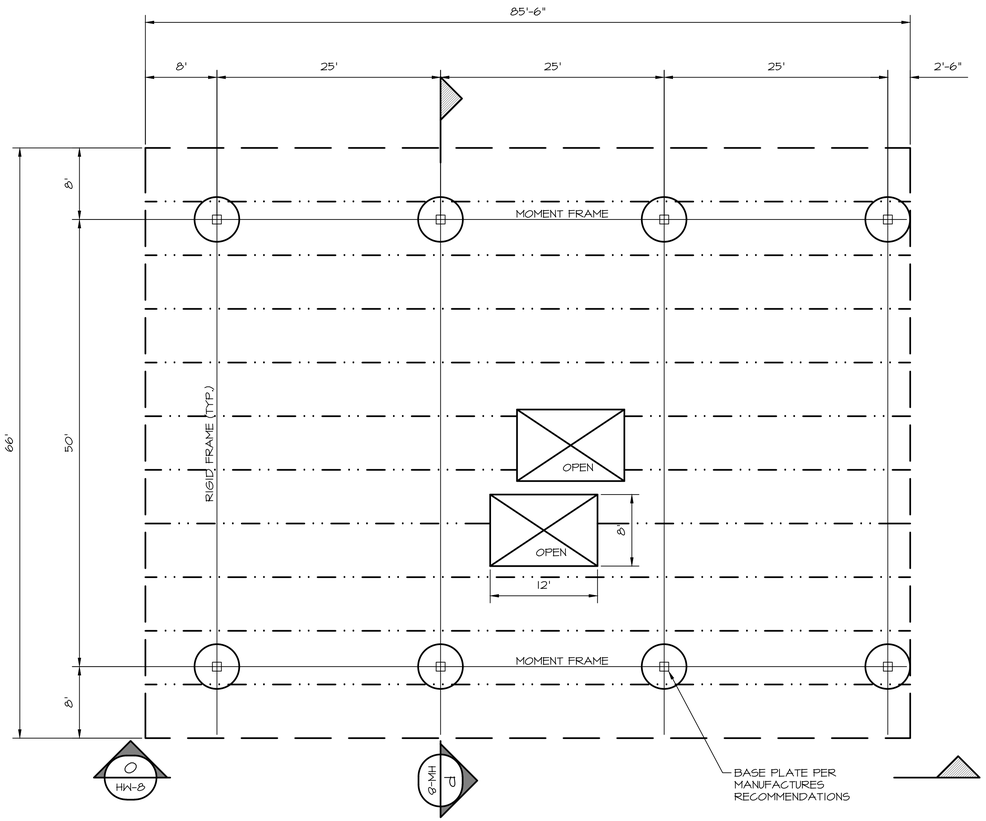

CANOPY ROOF FRAMING PLAN
SCALE: 1/8"=1'-0"

NOTE:
COORDINATE FINAL PLACEMENT OF SKYLIGHTS WITH SCREEN MFR.



WALL ENGINEERING
223 N. WASHINGTON, DURANT, OK 74701
OKLAHOMA CA #5413 EXP. JUNE 30, 2023

SUBMITTAL / REVISIONS:

DATE	BY	SUBMITTAL / REVISION
06/22	TL	ISSUED FOR BIDDING

SHAWNEE MUNICIPAL AUTHORITY
SOUTHSIDE IMPROVEMENTS
SHAWNEE, OKLAHOMA

HEADWORKS CANOPY
FRAMING PLAN

PROJECT NO.
SHN-20-01
DATE
06/22
DRAWN BY:
TL
CHECKED BY:
BW
REVIEWED BY:
DBW
SCALE:
1/8"=1'-0"

BAR IS ONE INCH ON ORIGINAL DRAWING
0" 1"
IF NOT ONE INCH ON THIS SHEET, ADJUST SCALES ACCORDINGLY

SHEET
HW-8

PIPING SCHEDULE STRUCTURE #2

NO.	ITEM	DESCRIPTION/NOTES
1	8" D.I. 22.5° BEND, FLxFL	
2	14"x8" D.I. ECCENTRIC REDUCER, FLxFL	ECCENTRIC
3	14" D.I. SPOOL, FLxFL	
4	14" D.I. 90° BEND, FLxFL	WITH RESTRAINED GLAND
5	14" D.I. WALL PIPE, FLxPE	WITH THRUST COLLAR
6	14" D.I. TEE, FLxFL	
7	14" D.I. DISMANTLING JOINT, FLxFL	
8	14"x14"x6" D.I. TEE, FLxFL	
9	6" D.I. SPOOL, FLxFL	
10	6" D.I. 90° BEND, FLxFL	
11	6" D.I. WALL PIPE, FLxPE	WITH THRUST COLLAR
12	6" D.I. DISMANTLING JOINT, FLxFL	
13	NOT USED	
14	NOT USED	
15	14"x16" D.I. ECCENTRIC REDUCER, FLxFL	ECCENTRIC
16	16" D.I. SPOOL, FLxFL	
17	16" D.I. 90° BEND, FLxFL	WITH RESTRAINED GLAND
18	16" D.I. WALL PIPE, FLxPE	WITH THRUST COLLAR
19	16" D.I. DISMANTLING JOINT, FLxFL	
20	16"X18" D.I. 90° REDUCING BEND, FLxFL	
21	18" D.I. SPOOL, FLxFL	
22	18"x18"x16" D.I. TEE, FLxFL	
23	18" D.I. DISMANTLING JOINT, FLxFL	
24	18" D.I. WALL PIPE, FLxPE	WITH THRUST COLLAR
25	3" PVC CHECK VALVE	
26	3" SCH. 80 PVC	
27	3" SHC. 80 PVC 90° BEND	
28	FLOOR DRAIN	NEENAH MODEL R-4937-A
29	NOT USED	
30	PIPE SUPPORT	AS NEEDED, SEE NOTE 7
31	2" AIR/VAC VALVE	WITH BALL VALVE AND COCK
32	3" AIR/VAC VALVE	WITH BALL VALVE AND COCK

PUMP SCHEDULE STRUCTURE #2

NO.	FLOW	TDH-DES	FUNCTION	CONTROL	HP	EFFICIENCY MIN.
02P101, 02P102	3,600 GPM	172'	PRIMARY	VFD	250	65%
02P103, 02P104	6,000 GPM	36'	STORMWATER	VFD	75	65%

PUMP NOTES:

1. PUMPS SHALL BE PROVIDED WITH BASE ELBOWS, S.S. RAILS, AND S.S. LIFTING CHAINS.
2. CONTRACTOR SHALL PROVIDE FITTINGS AS REQUIRED TO CONNECT BASE ELBOWS TO LIFT STATION PIPING.
3. PUMPS SHALL BE 460 VOLT THREE PHASE.
4. EACH PUMP SHALL BE EQUIPPED WITH A VARIABLE FREQUENCY DRIVE.

NOTES:

1. SEAL CONDUITS TO KEEP WET WELL GASSES OUT OF CONTROL PANEL.
2. LOCATE FLOATS AND CABLE HOLDER AWAY FROM INLET PIPE.
3. WETWELL FLOOR SHALL SLOPE TO PUMPS AS SHOWN.
4. ALL COMPONENTS SUBJECT SHALL BE DUCTILE IRON OR STAINLESS STEEL.
5. ALL ELECTRONICALLY ACTUATED VALVES TO ALSO BE EQUIPPED WITH HAND WHEEL OPERATORS.
6. ALL EXPOSED PIPING SHALL BE FULLY INSULATED AND HEAT TRACED TO PREVENT FROM FREEZING.
7. PIPE SUPPORT LOCATIONS ARE FOR REFERENCE ONLY & MORE MAY BE REQUIRED PER SPECIFICATION REQUIREMENTS AND/OR INDUSTRY STANDARD.
8. WETWELL TO BE EQUIPPED WITH A LEVEL TRANSDUCER AND 3 BACKUP FLOATS (LOW LEVEL, ALARM, INFLUENT CLOSE).
9. ALL HYDRANTS TO BE FURNISHED WITH STAINLESS STEEL WALL MOUNTED HOSE RACK AND 50' OF HEAVY DUTY COMMERCIAL HOSE (1").

316L SS GATE SCHEDULE STRUCTURE #2

GATE IDENTIFICATION	02SL01	02SL02
GATE TYPE	SLUICE	SLUICE
GATE SIZE	24" Φ	24"
GATE SERIES	924	924
MOUNTING - FRAME	CW	CW
MOUNTING - INVERT	EMBEDED	EMBEDED
HOIST REQUIREMENT		
A. MANUAL	HC	HC
B. ELECTRIC	NO	NO
C. STEM COVER	GS	GS
D. POSITION COVER	MYLAR	MYLAR
E. STEM CONFIGURATION	RISING	RISING
LIFT MOUNTING	YOKE	YOKE
LEAKAGE STANDARD	AWWA	AWWA
OPERATING FLOOR ELEV.	988.00'	988.00'
INVERT ELEV.	959.50'	959.50'

INDEX
FE: EMBEDDED FRAME
HC: HAND CRANK
GS: GALVANIZED STEEL
CW: CHANNEL WALL
SQN: SQUARE NUT

VALVE SCHEDULE STRUCTURE #2

VALVE I.D.	VALVE TYPE	VALVE SIZE	MOTORIZED
L3PV01	PLUG	14"	NO
L3SCV01	SMART CHECK	14"	NA
L3APV01	PLUG	14"	YES
L3ACV01	CHECK	14"	NA
L3BPV01	PLUG	14"	YES
L3BCV01	CHECK	14"	NA
L4PV01	PLUG	18"	NO
L4APV01	PLUG	16"	YES
L4ACV01	CHECK	16"	NA
L4BPV01	PLUG	16"	YES
L4BCV01	CHECK	16"	NA
DR2PV01	PLUG	6"	NO
DR2SRV01	SURGE RELIEF	6"	NA
DR2FV01	FLAP VALVE	6"	NA

NOTES:

1. FIELD ROUTE ARV DRAINS TO WETWELL FLOOR DRAIN IN PVC PIPE (NOT SHOWN FOR CLARITY).

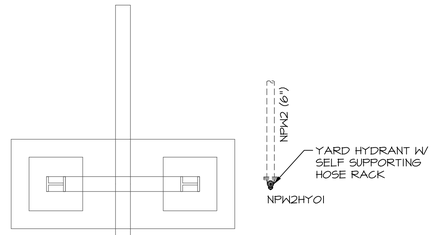

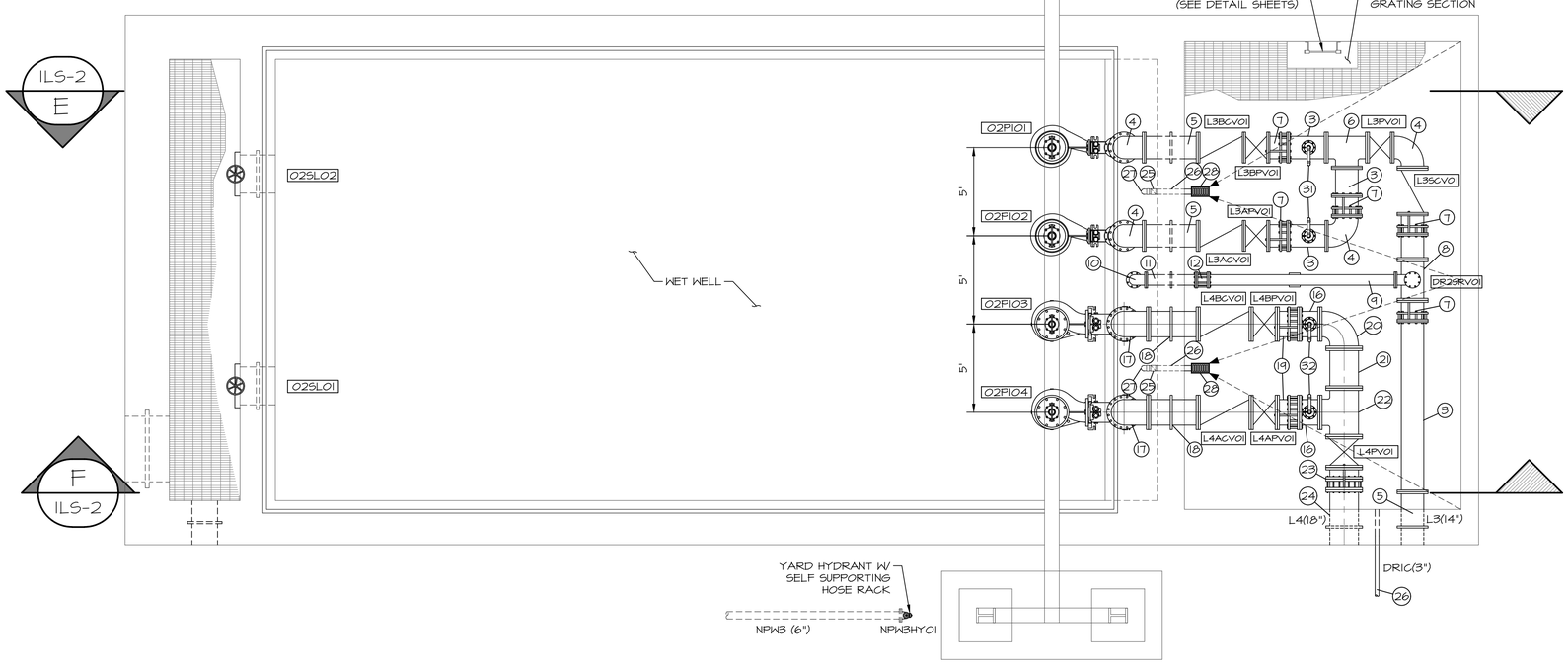

INFLUENT LIFT STATION PLAN VIEW

SCALE: 1/4"=1'-0"

WALL ENGINEERING
223 N. WASHINGTON, DURANT, OK 74701
OKLAHOMA CA #5413 EXP. JUNE 30, 2023

SUBMITTAL / REVISIONS:

DATE	BY	SUBMITTAL / REVISION
06/22	TL	ISSUED FOR BIDDING

SHAWNEE MUNICIPAL AUTHORITY
SOUTHSIDE IMPROVEMENTS
SHAWNEE, OKLAHOMA

INFLUENT LIFT STATION
PLAN VIEW

PROJECT NO.
SHN-20-01
DATE
06/22
DRAWN BY:
TL
CHECKED BY:
BW
REVIEWED BY:
DBW
SCALE:
1/4"=1'-0"

BAR IS ONE INCH ON ORIGINAL DRAWING
0" 1"
IF NOT ONE INCH ON THIS SHEET, ADJUST SCALES ACCORDINGLY

SHEET
ILS-1

REGISTERED PROFESSIONAL ENGINEER
DEREK BRANDON WALL
21108
OKLAHOMA

PIPING SCHEDULE STRUCTURE #2

NO.	ITEM	DESCRIPTION/NOTES
1	8" D.I. 22.5° BEND, FLxFL	
2	14"x8" D.I. ECCENTRIC REDUCER, FLxFL	ECCENTRIC
3	14" D.I. SPOOL, FLxFL	
4	14" D.I. 90° BEND, FLxFL	WITH RESTRAINED GLAND
5	14" D.I. WALL PIPE, FLxPE	WITH THRUST COLLAR
6	14" D.I. TEE, FLxFL	
7	14" D.I. DISMANTLING JOINT, FLxFL	
8	14"x14"x6" D.I. TEE, FLxFL	
9	6" D.I. SPOOL, FLxFL	
10	6" D.I. 90° BEND, FLxFL	
11	6" D.I. WALL PIPE, FLxPE	WITH THRUST COLLAR
12	6" D.I. DISMANTLING JOINT, FLxFL	
13	NOT USED	
14	NOT USED	
15	14"x16" D.I. ECCENTRIC REDUCER, FLxFL	ECCENTRIC
16	16" D.I. SPOOL, FLxFL	
17	16" D.I. 90° BEND, FLxFL	WITH RESTRAINED GLAND
18	16" D.I. WALL PIPE, FLxPE	WITH THRUST COLLAR
19	16" D.I. DISMANTLING JOINT, FLxFL	
20	16"X18" D.I. 90° REDUCING BEND, FLxFL	
21	18" D.I. SPOOL, FLxFL	
22	18"x18"x16" D.I. TEE, FLxFL	
23	18" D.I. DISMANTLING JOINT, FLxFL	
24	18" D.I. WALL PIPE, FLxPE	WITH THRUST COLLAR
25	3" PVC CHECK VALVE	
26	3" SCH. 80 PVC	
27	3" SHC. 80 PVC 90° BEND	
28	FLOOR DRAIN	NEENAH MODEL R-4937-A
29	NOT USED	
30	PIPE SUPPORT	AS NEEDED, SEE NOTE 7
31	2" AIR/VAC VALVE	WITH BALL VALVE AND COCK
32	3" AIR/VAC VALVE	WITH BALL VALVE AND COCK

PUMP SCHEDULE STRUCTURE #2

NO.	FLOW	TDH-DES	FUNCTION	CONTROL	HP	EFFICIENCY MIN.
02P101, 02P102	3,600 GPM	172'	PRIMARY	VFD	250	65%
02P103, 02P104	6,000 GPM	36'	STORMWATER	VFD	75	65%

PUMP NOTES:

1. PUMPS SHALL BE PROVIDED WITH BASE ELBOWS, S.S. RAILS, AND S.S. LIFTING CHAINS.
2. CONTRACTOR SHALL PROVIDE FITTINGS AS REQUIRED TO CONNECT BASE ELBOWS TO LIFT STATION PIPING.
3. PUMPS SHALL BE 460 VOLT THREE PHASE.
4. EACH PUMP SHALL BE EQUIPPED WITH A VARIABLE FREQUENCY DRIVE.

NOTES:

1. SEAL CONDUITS TO KEEP WET WELL GASSES OUT OF CONTROL PANEL.
2. LOCATE FLOATS AND CABLE HOLDER AWAY FROM INLET PIPE.
3. WETWELL FLOOR SHALL SLOPE TO PUMPS AS SHOWN.
4. ALL COMPONENTS SUBJECT SHALL BE DUCTILE IRON OR STAINLESS STEEL.
5. ALL ELECTRONICALLY ACTUATED VALVES TO ALSO BE EQUIPPED WITH HAND WHEEL OPERATORS.
6. ALL EXPOSED PIPING SHALL BE FULLY INSULATED AND HEAT TRACED TO PREVENT FROM FREEZING.
7. PIPE SUPPORT LOCATIONS ARE FOR REFERENCE ONLY & MORE MAY BE REQUIRED PER SPECIFICATION REQUIREMENTS AND/OR INDUSTRY STANDARD.
8. WETWELL TO BE EQUIPPED WITH A LEVEL TRANSDUCER AND 3 BACKUP FLOATS (LOW LEVEL, ALARM, INFLUENT CLOSE).
9. ALL HYDRANTS TO BE FURNISHED WITH STAINLESS STEEL WALL MOUNTED HOSE RACK AND 50' OF HEAVY DUTY COMMERCIAL HOSE (1").

316L SS GATE SCHEDULE STRUCTURE #2

GATE IDENTIFICATION	02SLO1	02SLO2
GATE TYPE	SLUICE	SLUICE
GATE SIZE	24" Φ	24"
GATE SERIES	924	924
MOUNTING - FRAME	CW	CW
MOUNTING - INVERT	EMBEDED	EMBEDED
HOIST REQUIREMENT		
A. MANUAL	HC	HC
B. ELECTRIC	NO	NO
C. STEM COVER	GS	GS
D. POSITION COVER	MYLAR	MYLAR
E. STEM CONFIGURATION	RISING	RISING
LIFT MOUNTING	YOKE	YOKE
LEAKAGE STANDARD	AWWA	AWWA
OPERATING FLOOR ELEV.	988.00'	988.00'
INVERT ELEV.	959.50'	959.50'

INDEX
FE: EMBEDDED FRAME
HC: HAND CRANK
GS: GALVANIZED STEEL
CW: CHANNEL WALL
SQN: SQUARE NUT

VALVE SCHEDULE STRUCTURE #2

VALVE I.D.	VALVE TYPE	VALVE SIZE	MOTORIZED
L3PV01	PLUG	14"	NO
L3SCV01	SMART CHECK	14"	NA
L3APV01	PLUG	14"	YES
L3ACV01	CHECK	14"	NA
L3BPV01	PLUG	14"	YES
L3BCV01	CHECK	14"	NA
L4PV01	PLUG	18"	NO
L4APV01	PLUG	16"	YES
L4ACV01	CHECK	16"	NA
L4BPV01	PLUG	16"	YES
L4BCV01	CHECK	16"	NA
DR2PV01	PLUG	6"	NO
DR2SRV01	SURGE RELIEF	6"	NA
DR2FV01	FLAP VALVE	6"	NA

NOTES:

1. FIELD ROUTE ARV DRAINS TO WETWELL FLOOR DRAIN IN PVC PIPE (NOT SHOWN FOR CLARITY).

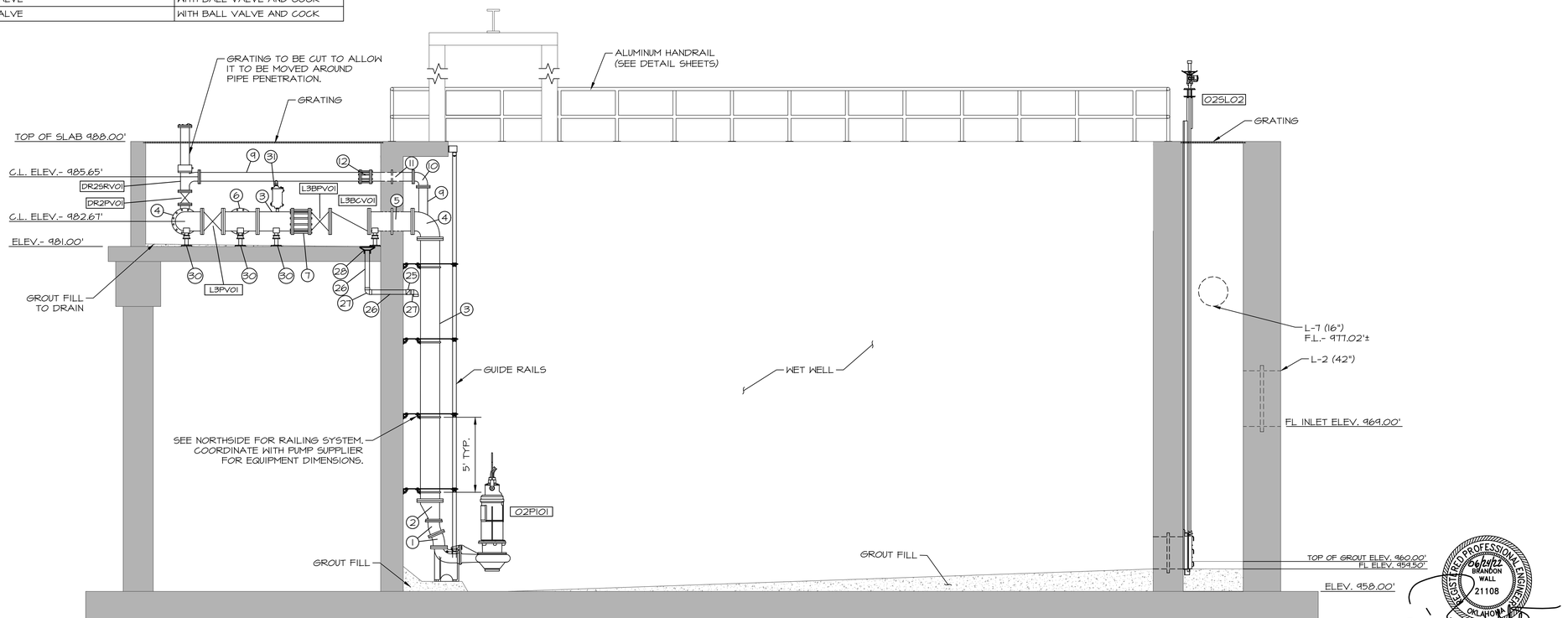

E SECTION
HW-1 SCALE: 1/4"=1'-0"

WALL ENGINEERING
223 N. WASHINGTON, DURANT, OK 74701
OKLAHOMA CA #5413 EXP. JUNE 30, 2023

SUBMITTAL / REVISIONS:

DATE	BY	SUBMITTAL / REVISION
06/22	TL	ISSUED FOR BIDDING

SHAWNEE MUNICIPAL AUTHORITY
SOUTHSIDE IMPROVEMENTS
SHAWNEE, OKLAHOMA

INFLUENT LIFT STATION
LIFT STATION SECTION VIEW

PROJECT NO.	SHN-20-01
DATE	06/22
DRAWN BY:	TL
CHECKED BY:	BW
REVIEWED BY:	DBW
SCALE:	1/4"=1'-0"

BAR IS ONE INCH ON ORIGINAL DRAWING
0" 1"
IF NOT ONE INCH ON THIS SHEET, ADJUST SCALES ACCORDINGLY

REGISTERED PROFESSIONAL ENGINEER
06/24/22
BRANDON WALL
21108
OKLAHOMA

SHEET
ILS-2A

PIPING SCHEDULE STRUCTURE #2

NO.	ITEM	DESCRIPTION/NOTES
1	8" D.I. 22.5° BEND, FLxFL	
2	14"x8" D.I. ECCENTRIC REDUCER, FLxFL	ECCENTRIC
3	14" D.I. SPOOL, FLxFL	
4	14" D.I. 90° BEND, FLxFL	WITH RESTRAINED GLAND
5	14" D.I. WALL PIPE, FLxPE	WITH THRUST COLLAR
6	14" D.I. TEE, FLxFL	
7	14" D.I. DISMANTLING JOINT, FLxFL	
8	14"x14"x6" D.I. TEE, FLxFL	
9	6" D.I. SPOOL, FLxFL	
10	6" D.I. 90° BEND, FLxFL	
11	6" D.I. WALL PIPE, FLxPE	WITH THRUST COLLAR
12	6" D.I. DISMANTLING JOINT, FLxFL	
13	NOT USED	
14	NOT USED	
15	14"x16" D.I. ECCENTRIC REDUCER, FLxFL	ECCENTRIC
16	16" D.I. SPOOL, FLxFL	
17	16" D.I. 90° BEND, FLxFL	WITH RESTRAINED GLAND
18	16" D.I. WALL PIPE, FLxPE	WITH THRUST COLLAR
19	16" D.I. DISMANTLING JOINT, FLxFL	
20	16"X18" D.I. 90° REDUCING BEND, FLxFL	
21	18" D.I. SPOOL, FLxFL	
22	18"x18"x16" D.I. TEE, FLxFL	
23	18" D.I. DISMANTLING JOINT, FLxFL	
24	18" D.I. WALL PIPE, FLxPE	WITH THRUST COLLAR
25	3" PVC CHECK VALVE	
26	3" SCH. 80 PVC	
27	3" SHC. 80 PVC 90° BEND	
28	FLOOR DRAIN	NEENAH MODEL R-4937-A
29	NOT USED	
30	PIPE SUPPORT	AS NEEDED, SEE NOTE 7
31	2" AIR/VAC VALVE	WITH BALL VALVE AND COCK
32	3" AIR/VAC VALVE	WITH BALL VALVE AND COCK

PUMP SCHEDULE STRUCTURE #2

NO.	FLOW	TDH-DES	FUNCTION	CONTROL	HP	EFFICIENCY MIN.
02PI01, 02PI02	3,600 GPM	172'	PRIMARY	VFD	250	65%
02PI03, 02PI04	6,000 GPM	36'	STORMWATER	VFD	75	65%

PUMP NOTES:

1. PUMPS SHALL BE PROVIDED WITH BASE ELBOWS, S.S. RAILS, AND S.S. LIFTING CHAINS.
2. CONTRACTOR SHALL PROVIDE FITTINGS AS REQUIRED TO CONNECT BASE ELBOWS TO LIFT STATION PIPING.
3. PUMPS SHALL BE 460 VOLT THREE PHASE.
4. EACH PUMP SHALL BE EQUIPPED WITH A VARIABLE FREQUENCY DRIVE.

NOTES:

1. SEAL CONDUITS TO KEEP WET WELL GASSES OUT OF CONTROL PANEL.
2. LOCATE FLOATS AND CABLE HOLDER AWAY FROM INLET PIPE.
3. WETWELL FLOOR SHALL SLOPE TO PUMPS AS SHOWN.
4. ALL COMPONENTS SUBJECT SHALL BE DUCTILE IRON OR STAINLESS STEEL.
5. ALL ELECTRONICALLY ACTUATED VALVES TO ALSO BE EQUIPPED WITH HAND WHEEL OPERATORS.
6. ALL EXPOSED PIPING SHALL BE FULLY INSULATED AND HEAT TRACED TO PREVENT FROM FREEZING.
7. PIPE SUPPORT LOCATIONS ARE FOR REFERENCE ONLY & MORE MAY BE REQUIRED PER SPECIFICATION REQUIREMENTS AND/OR INDUSTRY STANDARD.
8. WETWELL TO BE EQUIPPED WITH A LEVEL TRANSDUCER AND 3 BACKUP FLOATS (LOW LEVEL, ALARM, INFLUENT CLOSE).
9. ALL HYDRANTS TO BE FURNISHED WITH STAINLESS STEEL WALL MOUNTED HOSE RACK AND 50' OF HEAVY DUTY COMMERCIAL HOSE (1").

316L SS GATE SCHEDULE STRUCTURE #2

GATE IDENTIFICATION	02SL01	02SL02
GATE TYPE	SLUICE	SLUICE
GATE SIZE	24" Φ	24"
GATE SERIES	924	924
MOUNTING - FRAME	CW	CW
MOUNTING - INVERT	EMBEDED	EMBEDED
HOIST REQUIREMENT		
A. MANUAL	HC	HC
B. ELECTRIC	NO	NO
C. STEM COVER	GS	GS
D. POSITION COVER	MYLAR	MYLAR
E. STEM CONFIGURATION	RISING	RISING
LIFT MOUNTING	YOKE	YOKE
LEAKAGE STANDARD	AWWA	AWWA
OPERATING FLOOR ELEV.	988.00'	988.00'
INVERT ELEV.	959.50'	959.50'

INDEX
FE: EMBEDDED FRAME
HC: HAND CRANK
GS: GALVANIZED STEEL
CW: CHANNEL WALL
SQN: SQUARE NUT

VALVE SCHEDULE STRUCTURE #2

VALVE I.D.	VALVE TYPE	VALVE SIZE	MOTORIZED
L3PV01	PLUG	14"	NO
L3SCV01	SMART CHECK	14"	NA
L3APV01	PLUG	14"	YES
L3ACV01	CHECK	14"	NA
L3BPV01	PLUG	14"	YES
L3BCV01	CHECK	14"	NA
L4PV01	PLUG	18"	NO
L4APV01	PLUG	16"	YES
L4ACV01	CHECK	16"	NA
L4BPV01	PLUG	16"	YES
L4BCV01	CHECK	16"	NA
DR2PV01	PLUG	6"	NO
DR2SRV01	SURGE RELIEF	6"	NA
DR2FV01	FLAP VALVE	6"	NA

NOTES:

1. FIELD ROUTE ARV DRAINS TO WETWELL FLOOR DRAIN IN PVC PIPE (NOT SHOWN FOR CLARITY).

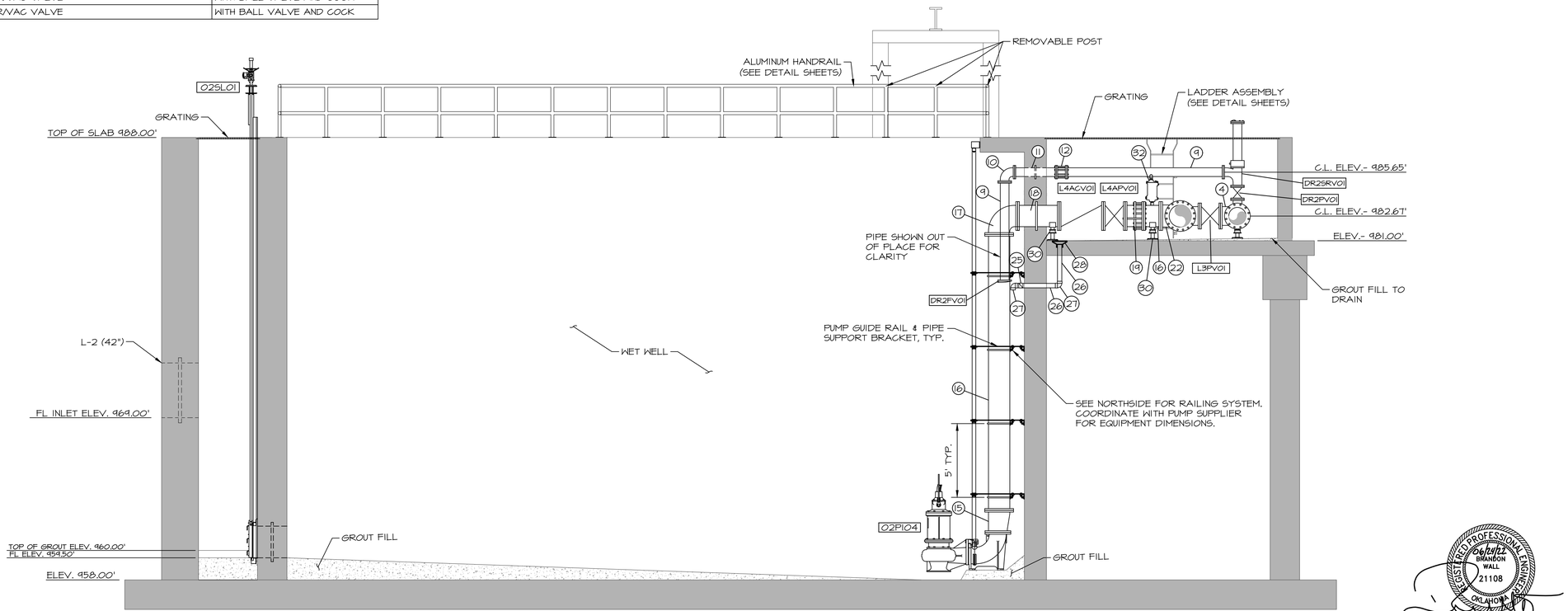

F HW-1 **SECTION**
SCALE: 1/4"=1'-0"

WALL ENGINEERING
223 N. WASHINGTON, DURANT, OK 74701
OKLAHOMA CA #5413 EXP. JUNE 30, 2023

SUBMITTAL / REVISIONS:

DATE	BY	SUBMITTAL / REVISION
06/22	TL	ISSUED FOR BIDDING

SHAWNEE MUNICIPAL AUTHORITY
SOUTHSIDE IMPROVEMENTS
SHAWNEE, OKLAHOMA

INFLUENT LIFT STATION
LIFT STATION SECTION VIEW

PROJECT NO.	SHN-20-01
DATE	06/22
DRAWN BY:	TL
CHECKED BY:	BW
REVIEWED BY:	DBW
SCALE:	1/4"=1'-0"

BAR IS ONE INCH ON ORIGINAL DRAWING
0" 1"
IF NOT ONE INCH ON THIS SHEET, ADJUST SCALES ACCORDINGLY

REGISTERED PROFESSIONAL ENGINEER
BRANDON WALL
21108
OKLAHOMA

SHEET
ILS-2B

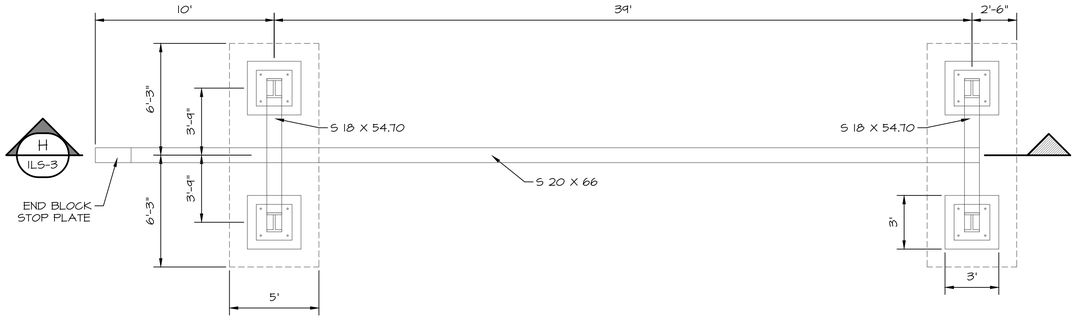

PLAN TROLLEY HOIST STRUCTURE
SCALE: 1/4""=1'-0"

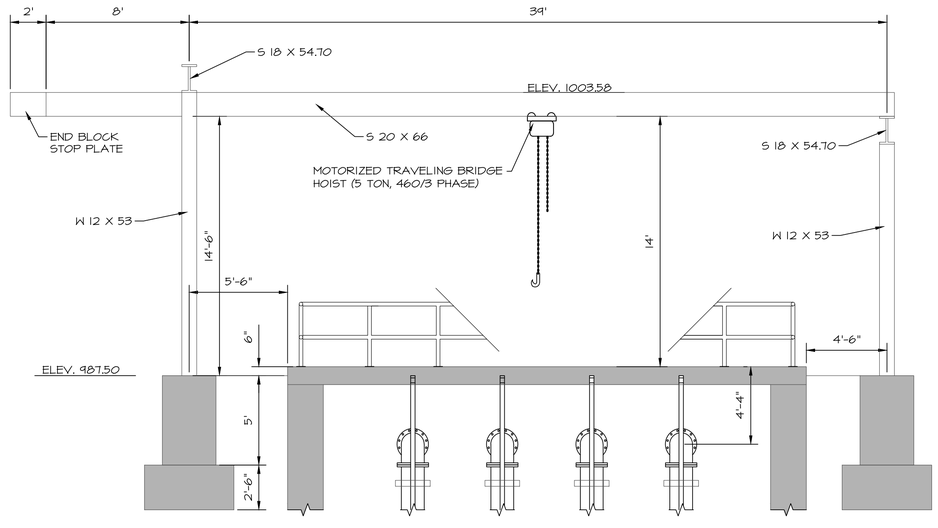

H HOIST SYSTEM PLAN VIEW
ILS-3
SCALE: 1/4""=1'-0"

NOTES:

1. MOTORIZED HOIST SYSTEM TO BE P.E. STAMPED PRE-ENGINEERED SYSTEM FURNISHED COMPLETE BY ONE (1) MANUFACTURER. (SUBMITTAL REQUIRED)

2. ALL EXPOSED STRUCTURAL MEMBERS OF RIGID FRAME METAL BUILDING SHALL BE PAINTED PER SPECIFICATIONS OR GALVANIZED.

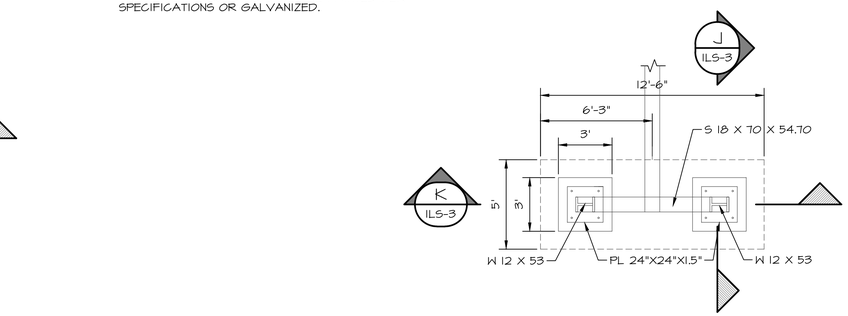

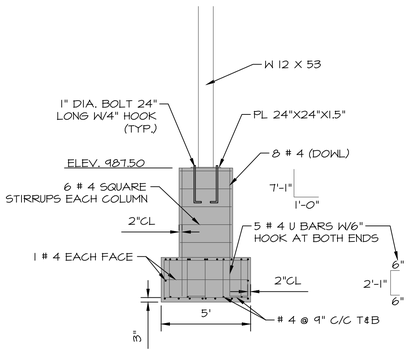

K HOIST SYSTEM SECTION
ILS-3
SCALE: 1/4""=1'-0"

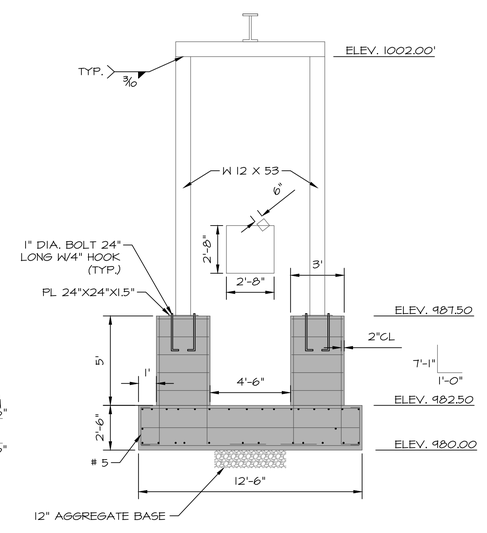

J HOIST SYSTEM SECTION VIEW
ILS-3
SCALE: 1/4""=1'-0"

WALL ENGINEERING
223 N. WASHINGTON, DURANT, OK 74701
OKLAHOMA CA #5413 EXP. JUNE 30, 2023

SUBMITTAL / REVISIONS:

DATE	BY	SUBMITTAL / REVISION
06/22	TL	ISSUED FOR BIDDING

SHAWNEE MUNICIPAL AUTHORITY
SOUTHSIDE IMPROVEMENTS
SHAWNEE, OKLAHOMA

INFLUENT LIFT STATION
HOIST SYSTEM PLAN AND ELEVATION

PROJECT NO.
SHN-20-01
DATE
06/22
DRAWN BY:
TL
CHECKED BY:
BW
REVIEWED BY:
DBW
SCALE:
1/4"=1'-0"

BAR IS ONE INCH ON ORIGINAL DRAWING
0" 1"
IF NOT ONE INCH ON THIS SHEET, ADJUST SCALES ACCORDINGLY

SHEET
ILS-3

REGISTERED PROFESSIONAL ENGINEER
06/30/23
BRANDON WALL
21108
OKLAHOMA

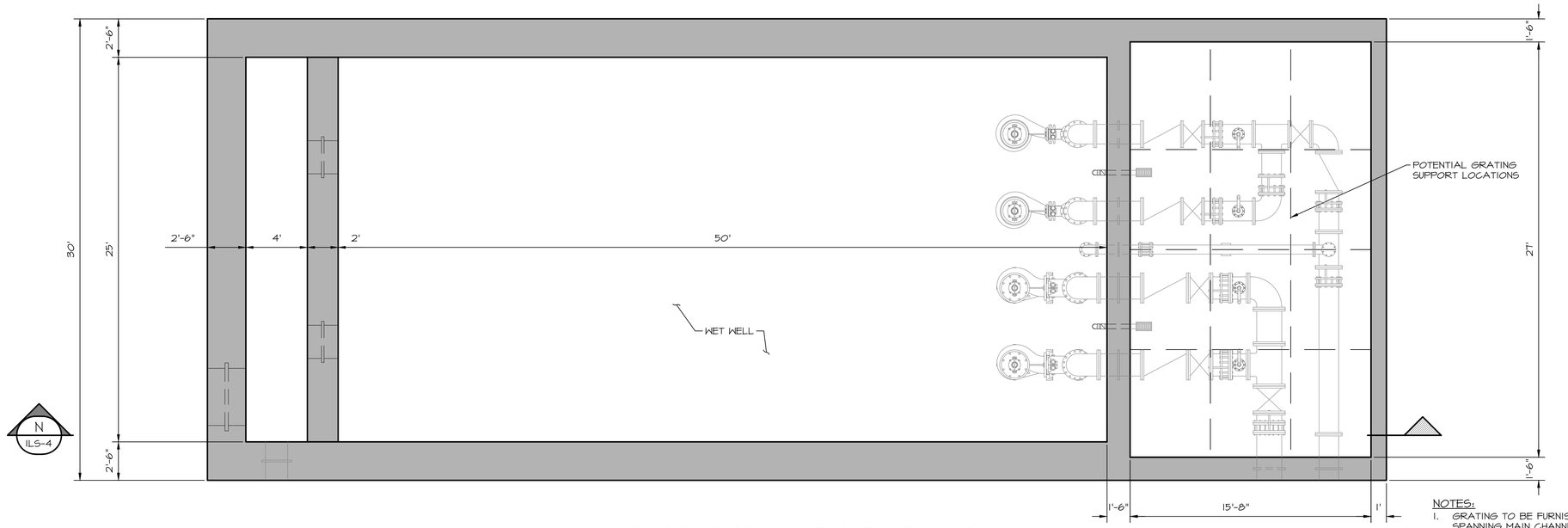

INFLUENT LIFT STATION STRUCTURAL PLAN VIEW

SCALE: 1/4"=1'-0"

NOTES:

1. GRATING TO BE FURNISHED WITH SUPPORTS FREE SPANNING MAIN CHANNEL AS REQUIRED & SHALL BE SECTIONED TO BE EASILY REMOVED BY HAND.
2. GRATING SYSTEM SUBMITTED W/SUPPORTS TO BE STAMPED BY AN OKLAHOMA STRUCTURAL ENGINEER.

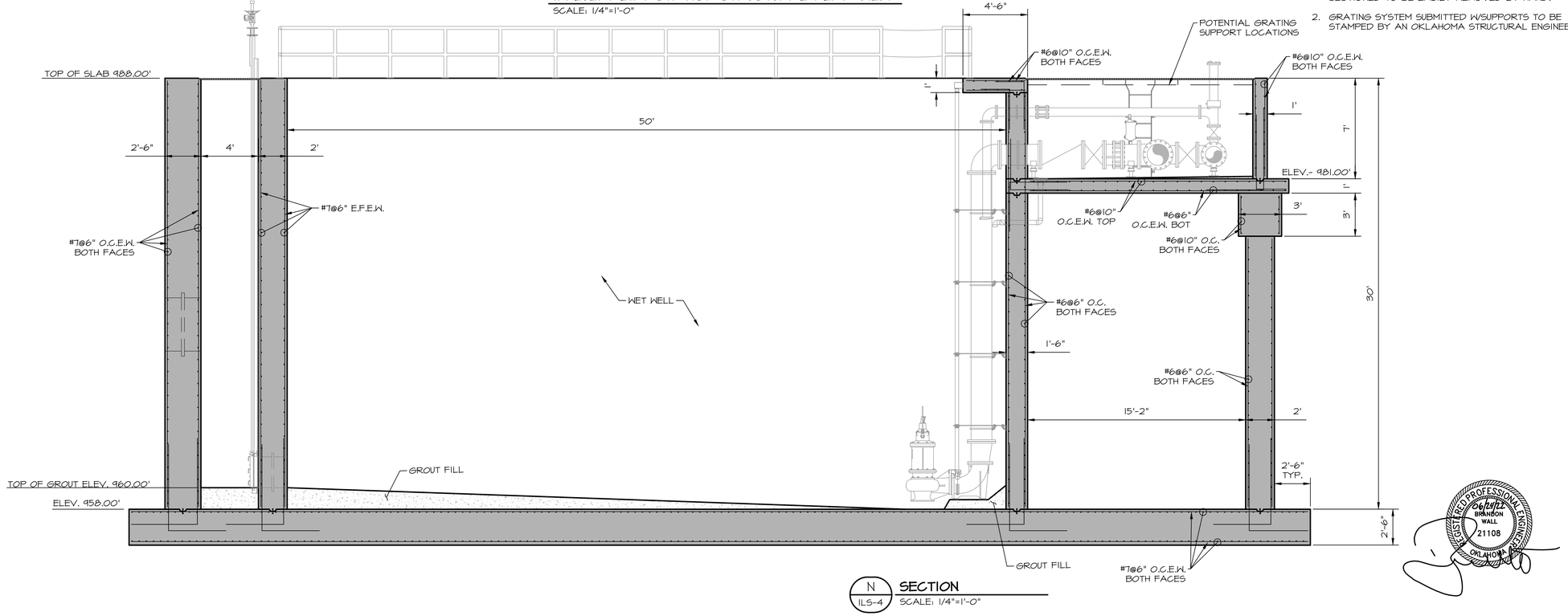

N
ILS-4

SECTION

SCALE: 1/4"=1'-0"

WALL ENGINEERING
223 N. WASHINGTON, DURANT, OK 74701
OKLAHOMA CA #5413 EXP. JUNE 30, 2023

SUBMITTAL / REVISIONS:

DATE	BY	SUBMITTAL / REVISION
06/22	TL	ISSUED FOR BIDDING

SHAWNEE MUNICIPAL AUTHORITY
SOUTHSIDE IMPROVEMENTS
SHAWNEE, OKLAHOMA

INFLUENT LIFT STATION
STRUCTURAL PLAN AND SECTION VIEW

PROJECT NO.	SHN-20-01
DATE	06/22
DRAWN BY:	TL
CHECKED BY:	BW
REVIEWED BY:	DBW
SCALE:	1/4"=1'-0"

BAR IS ONE INCH ON ORIGINAL DRAWING
0" 1"
IF NOT ONE INCH ON THIS SHEET, ADJUST SCALES ACCORDINGLY

REGISTERED PROFESSIONAL ENGINEER
BRANDON WALL
21108
OKLAHOMA

SHEET

ILS-4

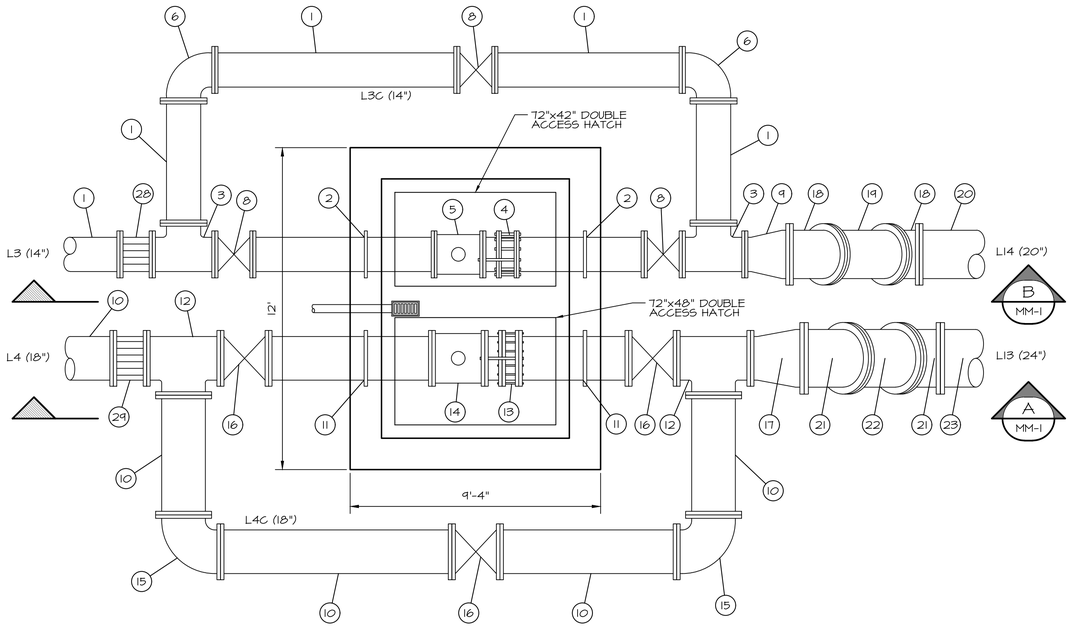

PLAN VIEW
SCALE: 3/8"=1'-0"

PIPING SCHEDULE STRUCTURE #3		
NO.	ITEM	DESCRIPTION/NOTES
1	14" D.I. SPOOL, FLxFL	
2	14" D.I. WALL PIPE, FLxPE	WITH THRUST COLLAR
3	14" D.I. TEE FLxFL	
4	14" D.I. DISMANTLING JOINT, FLxFL	
5	14" ELECTROMAGNETIC FLOW METER	L3MM01
6	14" D.I. 90° BEND, FLxFL	WITH RESTRAINED GLAND
8	14" PLUG VALVE, FLxFL	L3PV02, L3PV03, L3CPV01
9	14"x20" D.I. ECCENTRIC REDUCER, FLxFL	ECCENTRIC
10	18" D.I. SPOOL, FLxFL	
11	18" D.I. WALL PIPE, FLxPE	WITH THRUST COLLAR
12	18" D.I. TEE FLxFL	
13	18" D.I. DISMANTLING JOINT, FLxFL	
14	18" ELECTROMAGNETIC FLOW METER	L4MM01
15	18" D.I. 90° BEND, FLxFL	WITH RESTRAINED GLAND
16	18" PLUG VALVE, FLxFL	L4PV02, L4PV03, L4CPV01
17	18"x24" D.I. ECCENTRIC REDUCER	ECCENTRIC
18	20" D.I. 45° BEND, FLxFL	
19	20" D.I. SPOOL, FLxFL	
20	20" D.I. SPOOL, FLxPE	
21	24" D.I. 45° BEND, FLxFL	
22	24" D.I. SPOOL, FLxFL	
23	24" D.I. SPOOL, FLxPE	
24	3" SCH. 80 PVC	
25	3" SHC. 80 PVC 90° BEND	
26	FLOOR DRAIN	NEENAH MODEL R4981-A
27	PIPE SUPPORT	AS NEEDED
28	14" D.I. FLANGED COUPLING ADAPTER	
29	18" D.I. FLANGED COUPLING ADAPTER	

NOTES:

1. FIELD ROUTE SCH. 80 PVC DRAIN PIPE TO INFLUENT LIFT STATION WET WELL WITH CHECK VALVE.

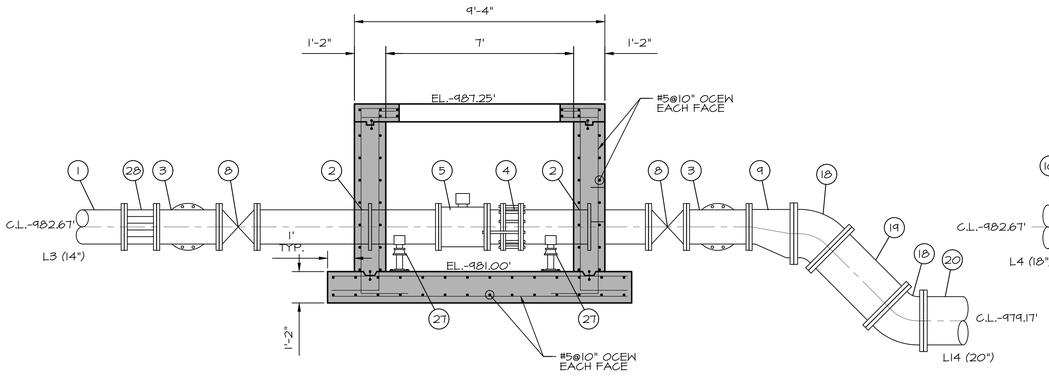

B MM-1 SECTION
SCALE: 3/8"=1'-0"

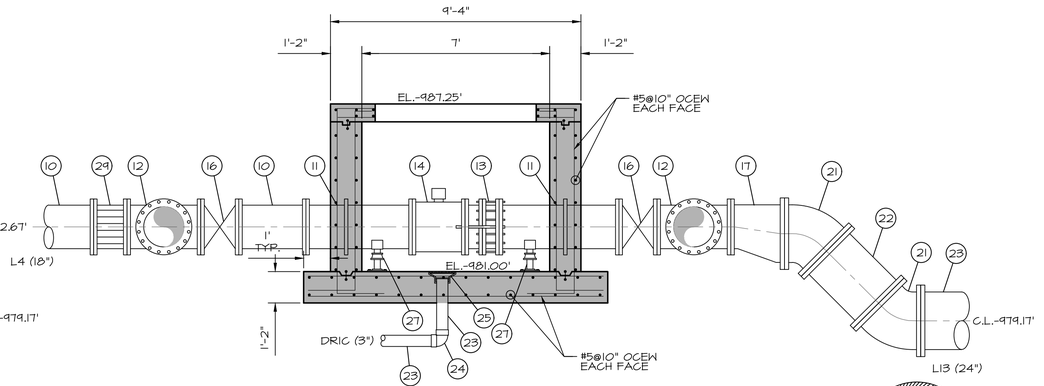

A MM-1 SECTION
SCALE: 3/8"=1'-0"



WALL ENGINEERING
223 N. WASHINGTON, DURANT, OK 74701
OKLAHOMA CA #5413 EXP. JUNE 30, 2023

SUBMITTAL / REVISIONS:

DATE	BY	SUBMITTAL / REVISION
06/22	TL	ISSUED FOR BIDDING

SHAWNEE MUNICIPAL AUTHORITY
SOUTHSIDE IMPROVEMENTS
SHAWNEE, OKLAHOMA

MAGNETIC FLOW METER
FEB/EFFLUENT MAG METER
PLAN AND SECTIONS

PROJECT NO.
SHN-20-01
DATE
06/22
DRAWN BY:
TL
CHECKED BY:
BW
REVIEWED BY:
DBW
SCALE:
AS SHOWN

BAR IS ONE INCH ON ORIGINAL DRAWING
0" 1"
IF NOT ONE INCH ON THIS SHEET, ADJUST SCALES ACCORDINGLY

SHEET
MM-1

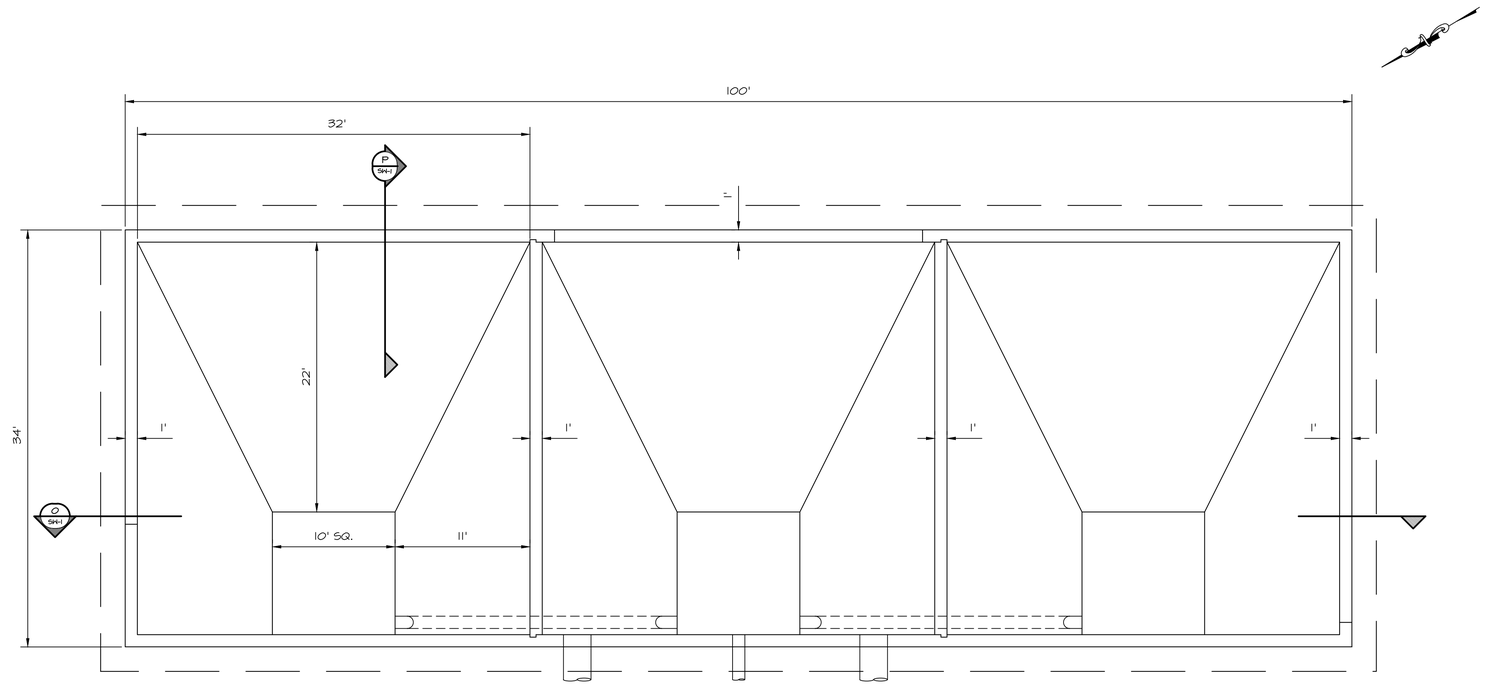

EXISTING BASIN
SCALE: 1:70

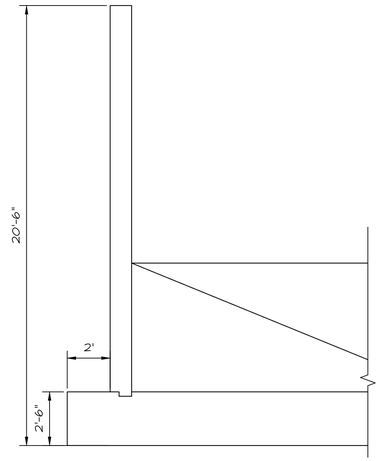

P SW-1 EXISTING BASIN SECTION
SCALE: 1:40

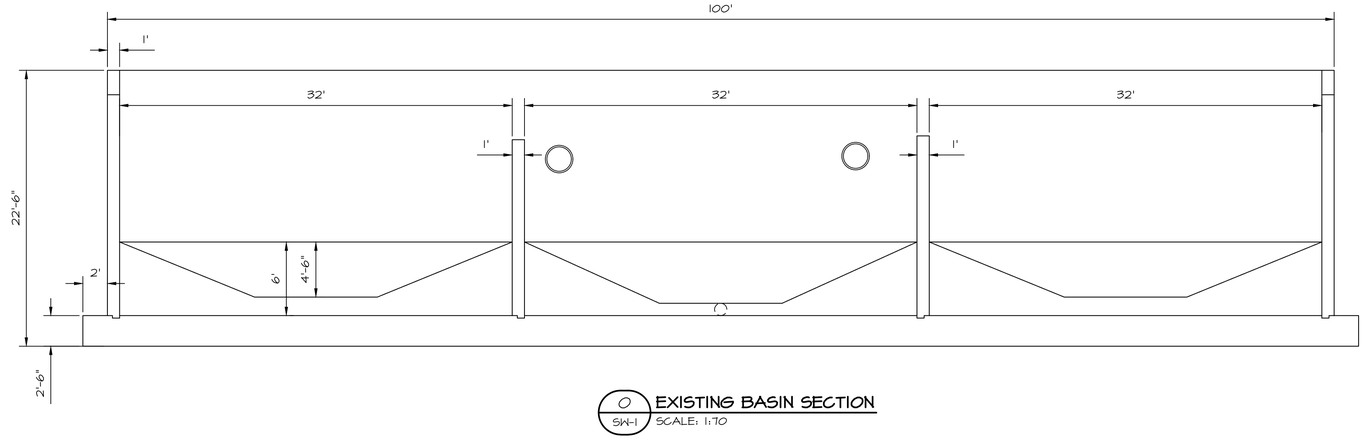

O SW-1 EXISTING BASIN SECTION
SCALE: 1:70



WALL ENGINEERING
223 N. WASHINGTON, DURANT, OK 74701
OKLAHOMA CA #5413 EXP. JUNE 30, 2023

SUBMITTAL / REVISIONS:

DATE	BY	SUBMITTAL / REVISION
06/22	TL	ISSUED FOR BIDDING

SHAWNEE MUNICIPAL AUTHORITY
SOUTHSIDE IMPROVEMENTS
SHAWNEE, OKLAHOMA

EXISTING PRIMARY FLOW EQUALIZATION BASIN

PROJECT NO.
SHN-20-01

DATE
06/22

DRAWN BY:
TL

CHECKED BY:
BW

REVIEWED BY:
DBW

SCALE:
AS SHOWN

BAR IS ONE INCH ON ORIGINAL DRAWING
0" 1"
IF NOT ONE INCH ON THIS SHEET, ADJUST SCALES ACCORDINGLY

SHEET
SW-1

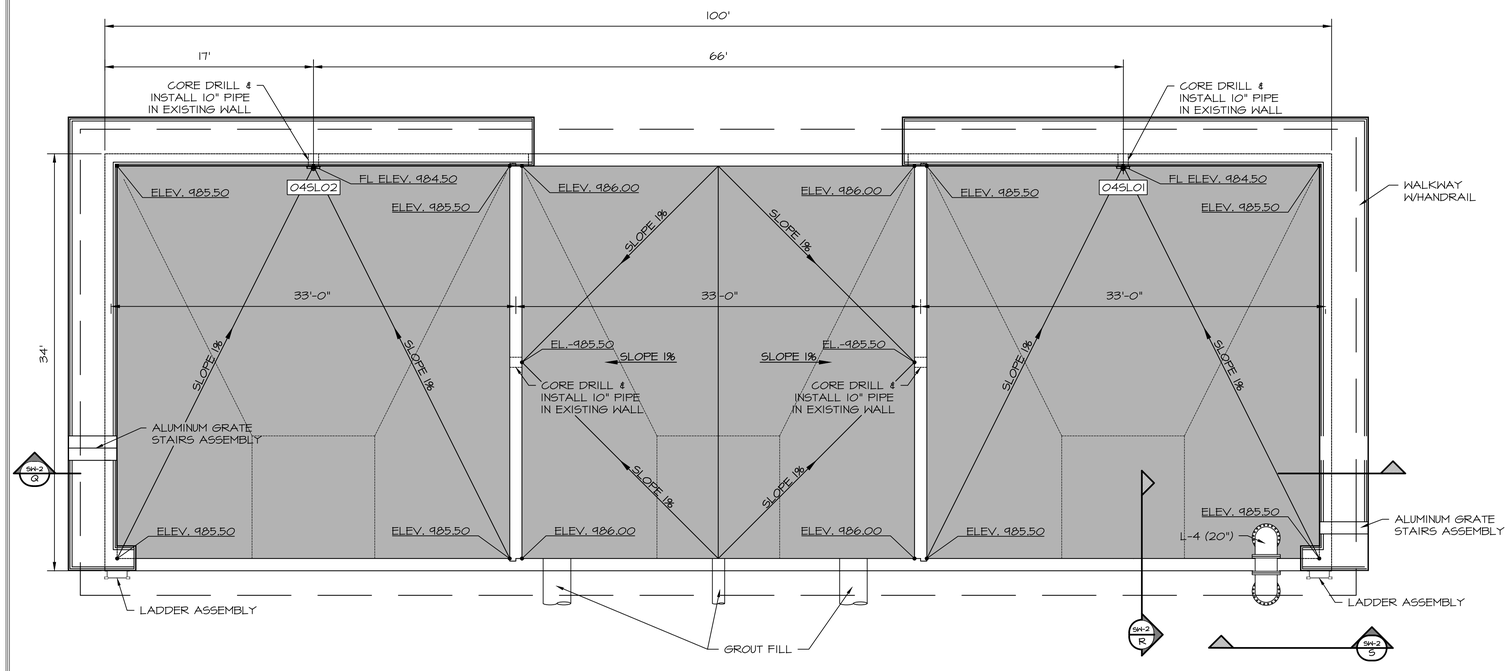

PROPOSED BASIN
SCALE: 1:70

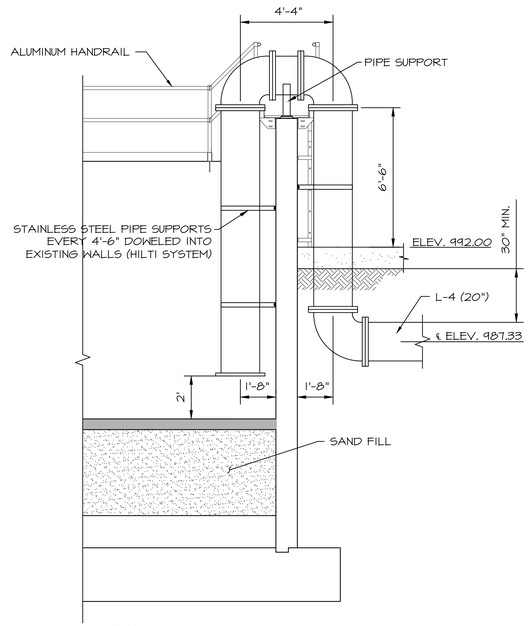

R / SW-2 PROPOSED BASIN SECTION
SCALE: 1:40

316L SS GATE SCHEDULE PROPOSED BASIN		
GATE IDENTIFICATION	045L01	045L02
GATE TYPE	SLUICE	SLUICE
GATE SIZE	10" Φ	10" Φ
GATE SERIES	924	924
MOUNTING - FRAME	CW	CW
MOUNTING - INVERT	EMBEDED	EMBEDED
HOIST REQUIREMENT		
A. MANUAL	HW	HW
B. ELECTRIC	NO	NO
C. STEM COVER	SS	SS
D. POSITION COVER	MYLAR	MYLAR
E. STEM CONFIGURATION	RISING	RISING
LIFT MOUNTING	YOKE	YOKE
LEAKAGE STANDARD	AWWA	AWWA
OPERATING FLOOR ELEV.	996.17'	996.17'
INVERT ELEV.	984.50'	984.50'

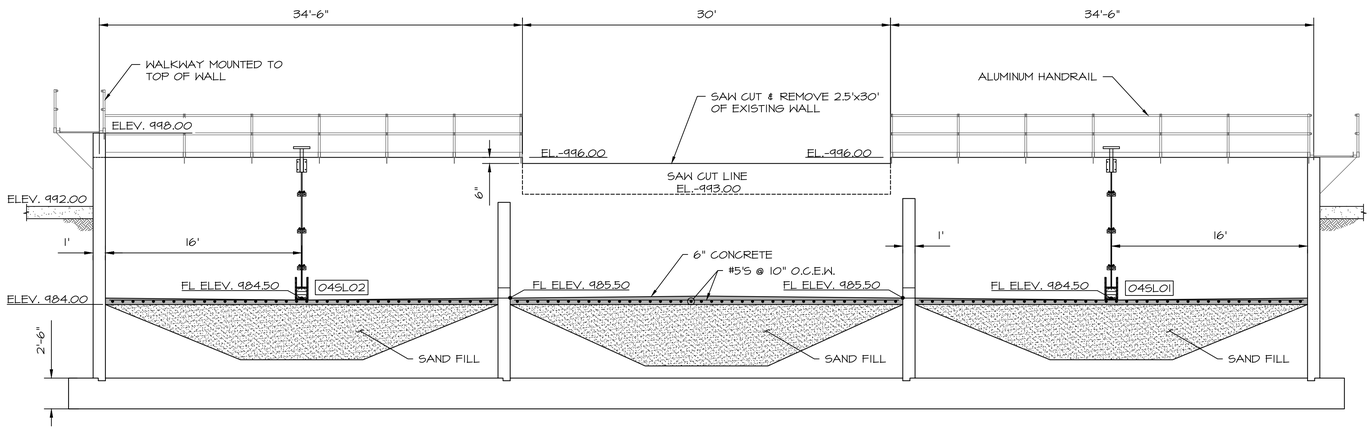

Q / SW-2 PROPOSED BASIN SECTION
SCALE: 1:70

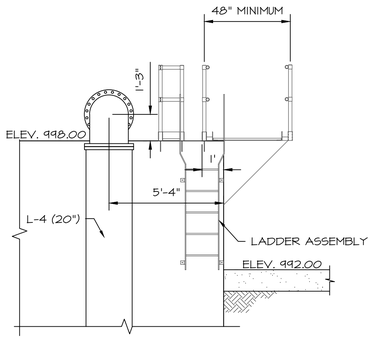

S / SW-2 PROPOSED BASIN SECTION
SCALE: 1:40

NOTE:
1. ENTIRE SYSTEM OF WALKWAY, HANDRAIL, STAIRS & LADDERS TO BE SUPPLIED AS A COMPLETE SYSTEM (INCLUDING WALL ATTACHMENT) FROM A SINGLE SUPPLIER & BE STAMPED BY OKLAHOMA STRUCTURAL ENGINEER.

2. SLOPED CONCRETE FLOOR MAY BE FORMED & POURED OR GROUTED.



WALL ENGINEERING
223 N. WASHINGTON, DURANT, OK 74701
OKLAHOMA CA #5413 EXP. JUNE 30, 2023

SUBMITTAL / REVISIONS:

DATE	BY	SUBMITTAL / REVISION
06/22	TL	ISSUED FOR BIDDING

SHAWNEE MUNICIPAL AUTHORITY
SOUTHSIDE IMPROVEMENTS
SHAWNEE, OKLAHOMA

PROPOSED PRIMARY FLOW EQUALIZATION BASIN

PROJECT NO.
SHN-20-01
DATE
06/22
DRAWN BY:
TL
CHECKED BY:
BW
REVIEWED BY:
DBW
SCALE:
AS SHOWN

BAR IS ONE INCH ON ORIGINAL DRAWING
0" 1"
IF NOT ONE INCH ON THIS SHEET, ADJUST SCALES ACCORDINGLY

SHEET
SW-2

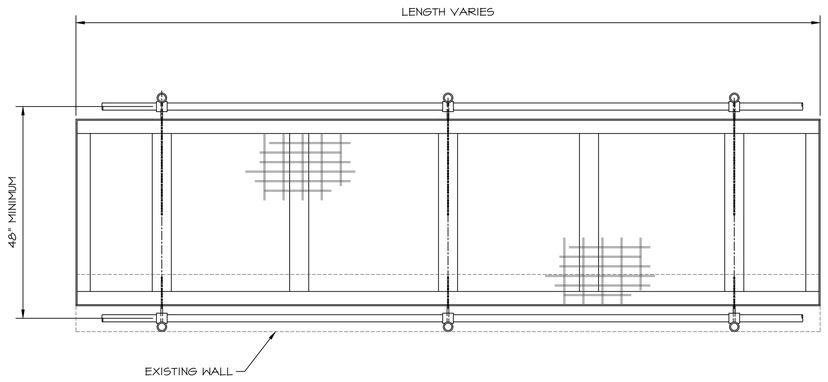

TOP VIEW

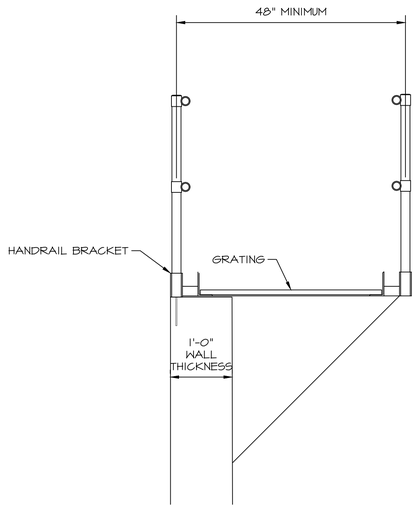

SECTION VIEW

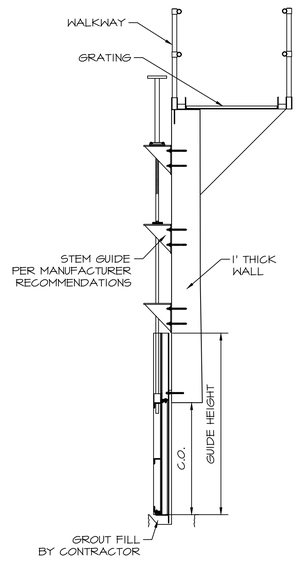

SLIDE GATE DETAIL



WALL ENGINEERING
223 N. WASHINGTON, DURANT, OK 74701
OKLAHOMA CA #6413 EXP. JUNE 30, 2023

SUBMITTAL / REVISIONS:

DATE	BY	SUBMITTAL / REVISION
06/22	TL	ISSUED FOR BIDDING

SHAWNEE MUNICIPAL AUTHORITY
SOUTHSIDE IMPROVEMENTS
SHAWNEE, OKLAHOMA

PRIMARY FLOW
EQUALIZATION BASIN
MISCELLANEOUS DETAILS

PROJECT NO.
SHN-20-01

DATE
06/22

DRAWN BY:
TL

CHECKED BY:
BW

REVIEWED BY:
DBW

SCALE:
NOT TO SCALE

BAR IS ONE INCH ON ORIGINAL DRAWING
0" 1"
IF NOT ONE INCH ON THIS SHEET, ADJUST SCALES ACCORDINGLY

SHEET
SW-3

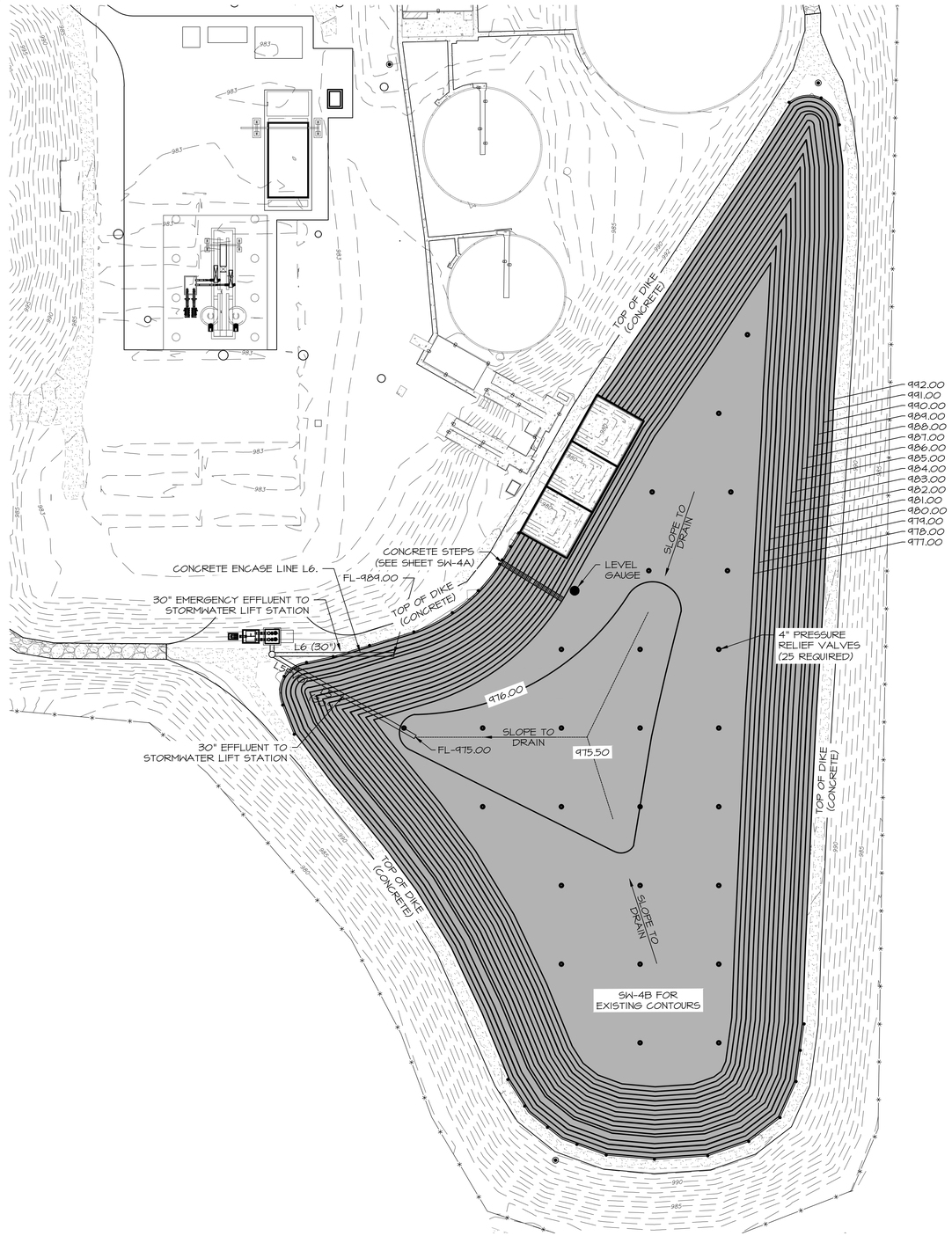

NOTES:

1. ALL CONCRETE SHALL BE 6" THICK.
2. CONTRACTOR SHALL SUBMIT TO THE ENGINEER FOR APPROVAL A JOINT SEALING METHOD FOR ALL CONSTRUCTION JOINTS REQUIRED IN THE CONCRETE LINER.
3. CONTRACTOR SHALL SUBMIT A JOINTING PLAN AND SLAB POURING SEQUENCE FOR APPROVAL BY THE ENGINEER.
4. JOINTS SHALL BE 20'-0" O.C. MAX.
5. THE SECONDARY FLOW EQUALIZATION BASIN SHALL BE EQUIPPED WITH ONE LEVEL GAUGE. THE LEVEL GAUGE SHALL CONSIST OF A 4" Ø 17-FEET LONG STEEL POST. THE POST SHALL HAVE A 2.5 MIL COAT OF TNEMEC 3TH-71 CHEM-PRIME, 4.0 MIL COAT OF TNEMEC SERIES 66 EPOXOLINE, AND ONE COAT OF TNEMEC SERIES 74 HIGH-BUILD ENDURA SHIELD OR EQUAL PAINT SYSTEM. STEEL POST SHALL BE EMBEDDED 3-FEET IN THE GROUND WITH A MINIMUM OF 12" Ø CONCRETE 3-FEET DEEP. LETTERING SHALL CONSIST OF AN ALTERNATING PATTERN OF WHITE BACKGROUND W/BLACK NUMBERS (EVEN NUMERALS) AND BLACK BACKGROUND W/WHITE NUMBERS AT 1-FOOT INTERVALS IN TENTHS FOR A TOTAL OF 14-FEET. LEVEL GAUGE SHALL BE FIELD LOCATED BY THE OWNER.
6. INFLUENT & EFFLUENT PIPE ENDS SHALL BE CUT TO MATCH BASIN SLOPE.
7. CONTRACTOR TO REMOVE AND DISPOSE OF APPROXIMATELY 10,880 C.Y. OF WASTE SLUDGE DOWN TO ELEVATION 974.00'. PER SECTION 31_01_33.
8. SLOPED WALLS & FLOOR TO BE CUT TO GRADES SHOWN & COMPACTED PRIOR TO CONCRETE PLACEMENT. PER SECTION DETAILS.
9. CROWN ROAD 2" @ ℄ ALONG TOP OF DIKE TO PROVIDE DRAINAGE AND ASSURE WATER DOES NOT POND ON ROADWAY.
10. QUANTITIES ARE APPROXIMATE. CONTRACTOR TO FIELD VERIFY PRIOR TO BID.

LEGEND

- CONCRETE LINED FLOW EQUALIZATION BASIN (14,510 S.Y.)
- PRESSURE RELIEF VALVE
- LEVEL GAUGE
- PROPOSED FORCE MAIN
- PROPOSED GRAVITY LINE
- PROPOSED GUARDRAIL (525 L.F.)
- SW — STORM WATER PIPING
- PE — PRIMARY EFFLUENT PIPING

WALL ENGINEERING
223 N. WASHINGTON, DURANT, OK 74701
OKLAHOMA CA #6413 EXP. JUNE 30, 2023

SUBMITTAL / REVISIONS:

DATE	BY	SUBMITTAL / REVISION
06/22	TL	ISSUED FOR BIDDING

SHAWNEE MUNICIPAL AUTHORITY
SOUTHSIDE IMPROVEMENTS
SHAWNEE, OKLAHOMA

SECONDARY FLOW EQAULIZATION BASIN PLAN, SECTION & DETAILS

PROJECT NO.
SHN-20-01
DATE
06/22
DRAWN BY:
BW
CHECKED BY:
BW
REVIEWED BY:
DBW
SCALE:
1"=40'

BAR IS ONE INCH ON ORIGINAL DRAWING
0" 1"
IF NOT ONE INCH ON THIS SHEET, ADJUST SCALES ACCORDINGLY

REGISTERED PROFESSIONAL ENGINEER
06/21/22
BRANDON WALL
21108
OKLAHOMA

SHEET
SW-4

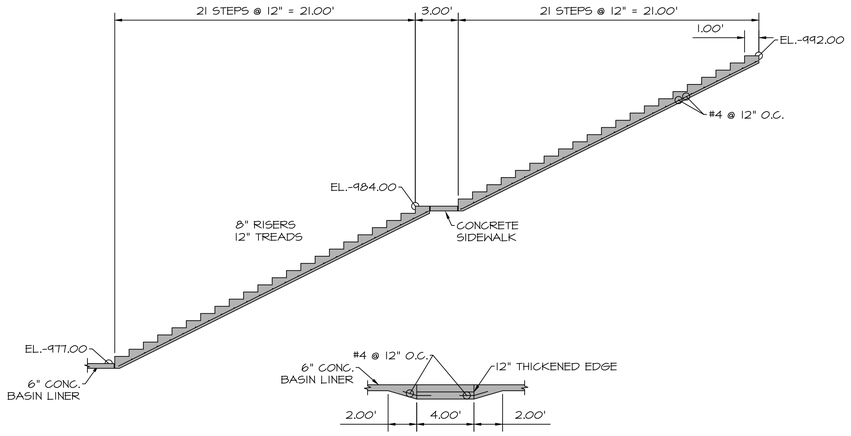

CONCRETE STEPS DETAILS
SCALE 1"=5'

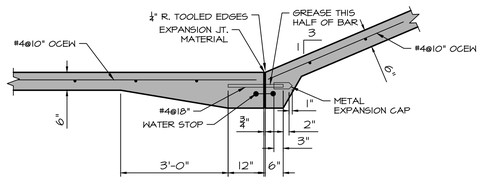

EXPANSION JOINT AT TOE OF SIDESLOPES
SCALE: 1:2

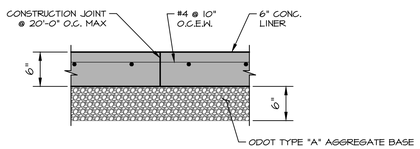

NOTES:

1. CONTRACTOR SHALL BEND ALL BARS AS REQUIRED FOR INSTALLATION.
2. CONTRACTOR SHALL ALTERNATE BARS TO BE CONTINUOUS THROUGH JOINT, STOP ALTERNATE BARS 2" FROM JOINT.
3. CONTRACTOR SHALL PROVIDE 6" PVC CENTER BULB WATER STOP IN JOINTS.
4. ON SIDE SLOPES AND BOTTOM, PROVIDE EXPANSION JTS. @ 50' CTRS. PROVIDE SAWED CONSTRUCTION JTS. @ 10' CTRS. EACH WAY. SUBMIT JOINTING PLAN FOR APPROVAL.

JOINT DETAIL/SECTION
SCALE: N.T.S.

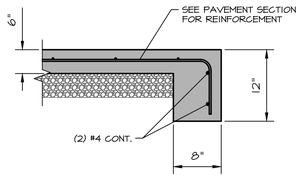

CONCRETE TOP DETAIL
SCALE: 1:1



WALL ENGINEERING
223 N. WASHINGTON, DURANT, OK 74701
OKLAHOMA CA #5413 EXP. JUNE 30, 2023

SUBMITTAL / REVISIONS:

DATE	BY	SUBMITTAL / REVISION
06/22	TL	ISSUED FOR BIDDING

SHAWNEE MUNICIPAL AUTHORITY
SOUTHSIDE IMPROVEMENTS
SHAWNEE, OKLAHOMA

SECONDARY FLOW EQAULIZATION
BASIN PLAN, SECTION & DETAILS

PROJECT NO.
SHN-20-01
DATE
06/22
DRAWN BY:
TL
CHECKED BY:
BW
REVIEWED BY:
DBW
SCALE:
AS NOTED

BAR IS ONE INCH ON ORIGINAL DRAWING
0" 1"
IF NOT ONE INCH ON THIS SHEET, ADJUST SCALES ACCORDINGLY

SHEET
SW-4A

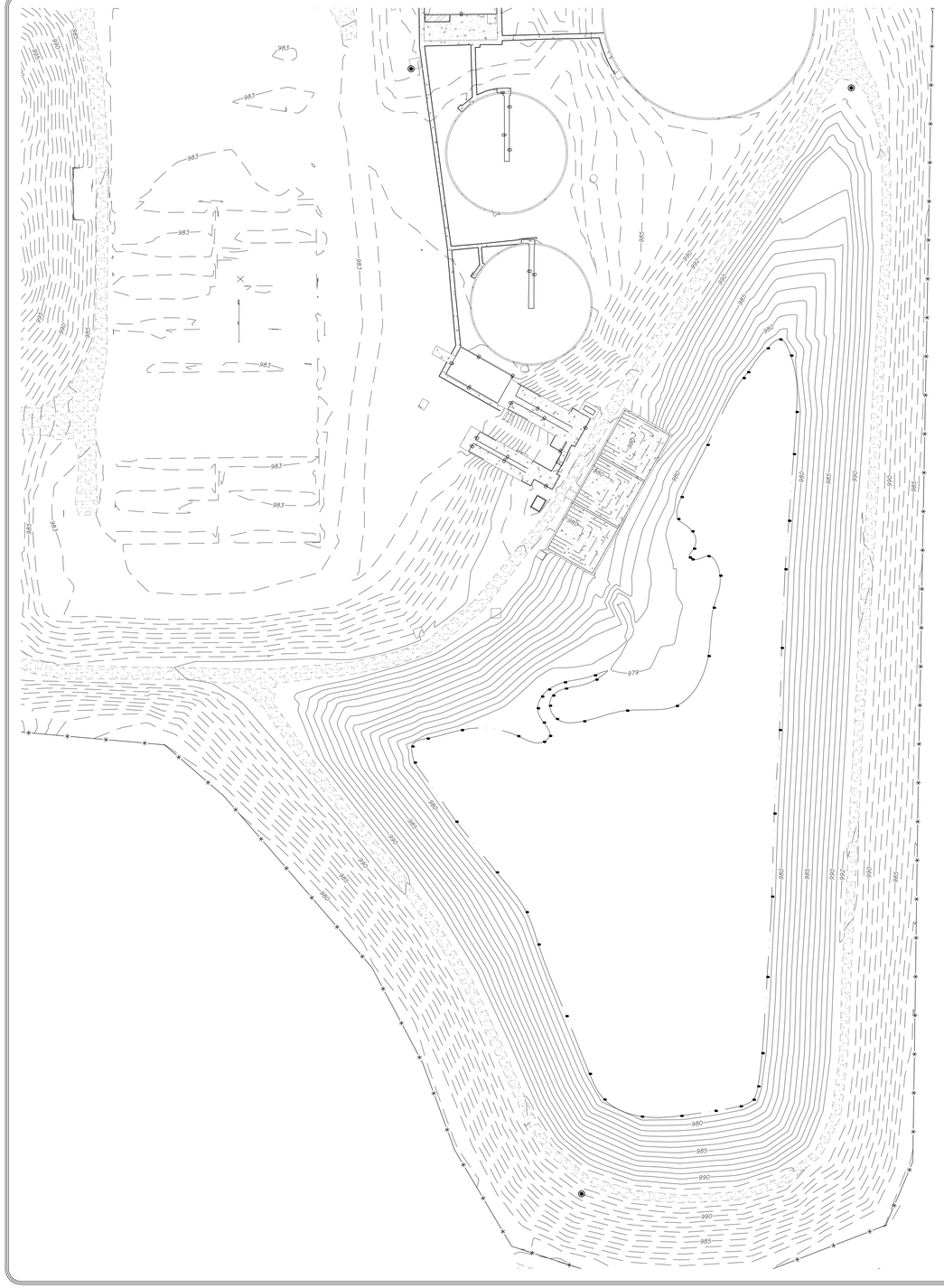

NOTES:

1. LAGOON BOTTOMS REPRESENT THE TOP OF SLUDGE AT THE TIME OF SURVEY (979').
2. REMOVE EXISTING SUBGRADE/SLUDGE TO AN ELEVATION OF 974' (10,680 C.Y.).

REGISTERED PROFESSIONAL ENGINEER
06/21/22
BRANDON WALL
21108
OKLAHOMA

WALL ENGINEERING
223 N. WASHINGTON, DURANT, OK 74701
OKLAHOMA CA #5413 EXP. JUNE 30, 2023

SUBMITTAL / REVISIONS:

DATE	BY	SUBMITTAL / REVISION
06/22	TL	ISSUED FOR BIDDING

SHAWNEE MUNICIPAL AUTHORITY
SOUTHSIDE IMPROVEMENTS
SHAWNEE, OKLAHOMA

SECONDARY FLOW EQAULIZATION
EXISTING GRADING

PROJECT NO.
SHN-20-01

DATE
06/22

DRAWN BY:
BW

CHECKED BY:
BW

REVIEWED BY:
DBW

SCALE:
1"=40'

BAR IS ONE INCH ON ORIGINAL DRAWING
0' 1'
IF NOT ONE INCH ON THIS SHEET, ADJUST SCALES ACCORDINGLY

SHEET

SW-4B

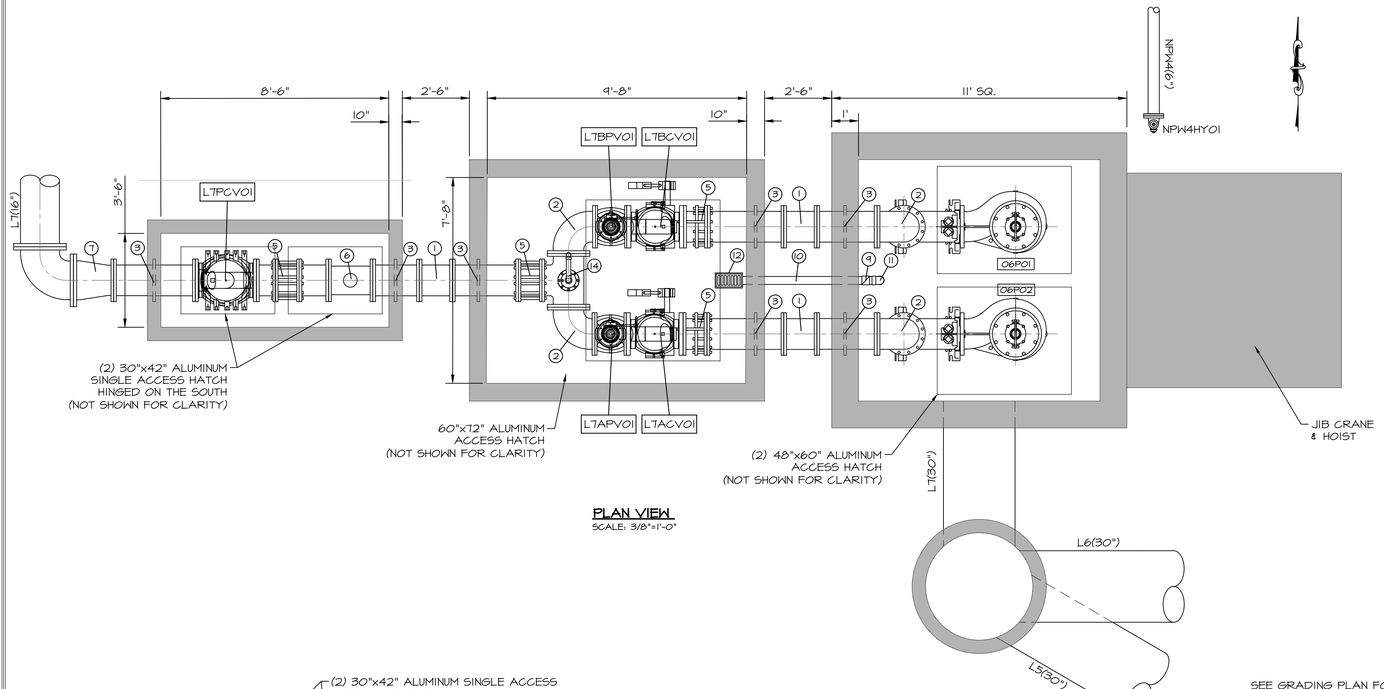

PLAN VIEW
SCALE: 3/8"=1'-0"

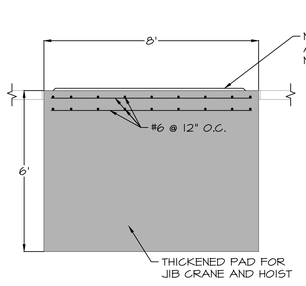

JIB CRANE FOUNDATION
N.T.S.

JIB CRANE NOTES:

1. JIB CRANE SHALL BE SPANCO MODEL 100 FREESTANDING JIB CRANE.
2. SPAN LENGTH SHALL BE 15'.
3. FURNISH 2 TON ELECTRIC MONORAIL HOIST W/ PUSH TROLLEY WITH WATERPROOF COVER.
4. CONTRACTOR TO PROVIDE AND INSTALL MECHANISM IN CONCRETE TO PREVENT CRANE FROM FREE ROTATING IF NOT SUPPLIED BY MANUFACTURER.
5. FOOTING DIMENSIONS ARE FOR REFERENCE ONLY AND SHALL BE PER MANUFACTURER REQUIREMENTS/RECOMMENDATIONS.
6. PROVIDE MOTORIZED TROLLEY HOIST CAPABLE OF LIFTING SUBMERSIBLE PUMPS FROM WET WELL FOR MAINTENANCE AND REPAIR.
7. HOIST SUPPLIER SHALL INSPECT AND CERTIFY HOIST INSTALLATION MEETS MINIMUM STANDARDS AND IS APPROPRIATE FOR THIS APPLICATION.
8. FURNISH "J" BOLTS PER MANUFACTURER RECOMMENDATIONS.

VALVE SCHEDULE STRUCTURE #6 & #7

VALVE I.D.	VALVE TYPE	VALVE SIZE	MOTORIZED
L7APV01	PLUG	12"	YES
L7ACV01	CHECK	12"	NA
L7BPV01	PLUG	12"	YES
L7BCV01	CHECK	12"	NA
L7PCV01	PINCH VALVE	12"	YES

NOTES:

1. ROUTE AIR/VAC DRAINS TO FLOOR DRAIN IN PVC.
2. AIR RELEASE VALVES TO BE SUPPLIED WITH ISOLATION BALL VALVE & ½" SAMPLE COCK.

PUMP SCHEDULE STRUCTURE #6

NO.	FLOW	TDH-DES	FUNCTION	CONTROL	HP	EFFICIENCY MIN.
06P01-06P02	3,200 GPM	16'	STORMWATER	VFD	20	65%

PUMP NOTES:

1. PUMPS SHALL PENTAIR OR APPROVED EQUAL.
2. PUMPS SHALL BE PROVIDED WITH BASE ELBOWS, S.S. RAILS, AND S.S. LIFTING CHAINS.
3. PROVIDE FITTINGS AS REQUIRED TO CONNECT BASE ELBOWS TO LIFT STATION PIPING.
4. EACH PUMP SHALL BE EQUIPPED WITH A VARIABLE FREQUENCY DRIVE.
5. HOLD CONDUIT TIGHT TO BOTTOM OF WET WELL SLAB. ONE CONDUIT FOR EACH POWER CABLE, ONE FOR FLOAT SWITCHES.
6. SEAL CONDUITS TO KEEP WET WELL GASSES OUT OF CONTROL PANEL.
7. LOCATED FLOATS AND CABLE HOLDER AWAY FROM INLET PIPE.
8. ALL COMPONENTS SUBJECT TO CONTACT WITH WASTEWATER SHALL BE DUCTILE IRON OR STAINLESS STEEL.
9. PIPE SUPPORT LOCATIONS ARE FOR REFERENCE ONLY & MORE MAY BE REQUIRED PRE SPECIFICATIONS AND/OR INDUSTRY STANDARD.
10. WETWELL TO BE EQUIPPED WITH A LEVEL TRANSDUCER AND 3 BACKUP FLOATS (LOW LEVEL, ALARM, INFLUENT CLOSE).
11. LIFT STATION VAULTS TO RECEIVE AN EXTERIOR COATING OF INDURON RS-2100 APPLIED TO ACHIEVE 12-16 DRY MILLS (COLOR = BLACK) AND AN INTERIOR COATING OF INDURON PERMA-SAFE 100 APPLIED TO ACHIEVE 40 DRY MILLS (COLOR = RED).

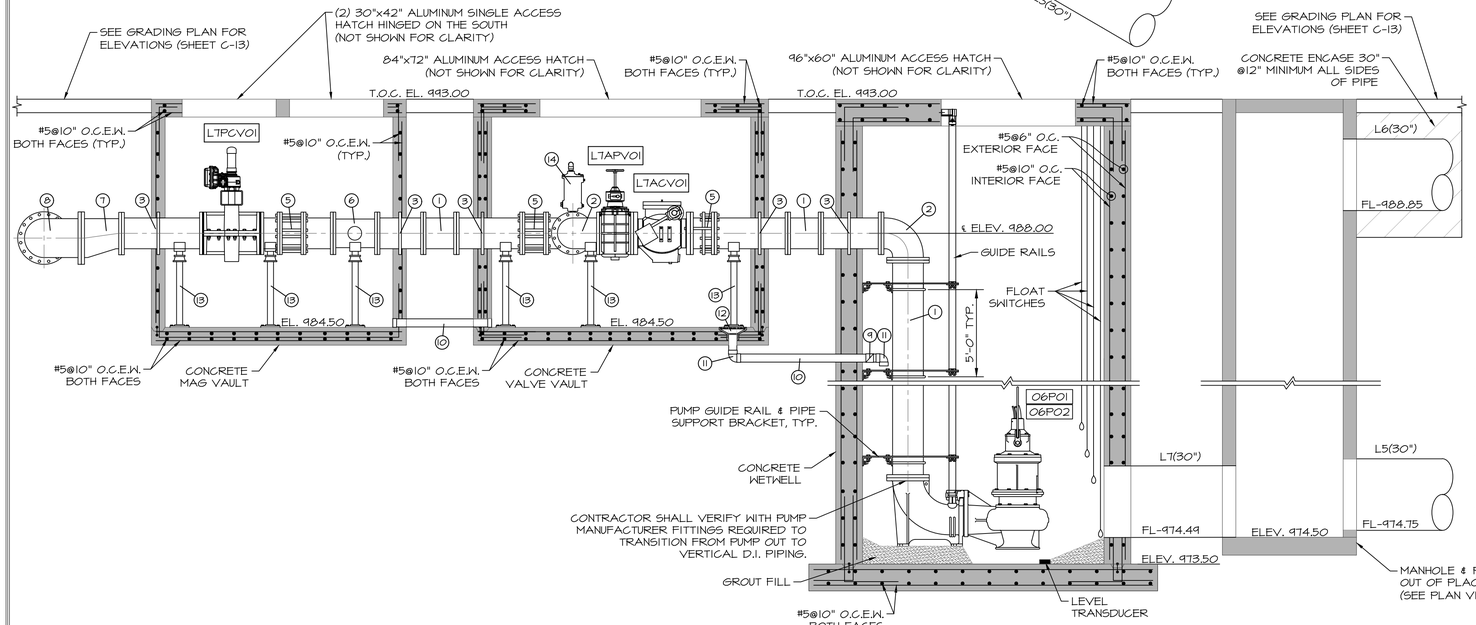

SECTION VIEW
SCALE: 3/8"=1'-0"

PIPING SCHEDULE STRUCTURE #6 & #7

NO.	ITEM	DESCRIPTION/NOTES
1	12" D.I. SPOOL, FLxFL	
2	12" D.I. 90° BEND, FLxFL	WITH RESTRAINED GLAND
3	12" D.I. WALL PIPE - FLxFL	WITH THRUST COLLAR
4	12" D.I. TEE - FLxFL	
5	12" D.I. DISMANTLING JOINT, FLxFL	
6	12" FLANGED MAGNETIC FLOW METER	L7MM01
7	12"x16" D.I. ECCENTRIC REDUCER - FLxFL	ECCENTRIC
8	16" 90° ELL - FLxFL	
9	3" PVC CHECK VALVE	
10	3" SCH. 80 PVC	
11	3" SCH. 80 PVC 90° BEND	
12	FLOOR DRAIN	NEENAH MODEL R-4937-A
13	PIPE SUPPORT	AS NEEDED, SEE NOTE 9
14	2" AIR/VAC VALVE	WITH BALL VALVE AND COCK

REGISTERED PROFESSIONAL ENGINEER
06/24/22
BRANDON WALL
21108
OKLAHOMA

WALL ENGINEERING
223 N. WASHINGTON, DURANT, OK 74701
OKLAHOMA CA #5413 EXP. JUNE 30, 2023

SUBMITTAL / REVISIONS:

DATE	BY	SUBMITTAL / REVISION
06/22	TL	ISSUED FOR BIDDING

SHAWNEE MUNICIPAL AUTHORITY
SOUTHSIDE IMPROVEMENTS
SHAWNEE, OKLAHOMA

FEB LIFT STATION
PLAN, SECTION AND DETAIL

PROJECT NO.
SHN-20-01
DATE
06/22
DRAWN BY:
TL
CHECKED BY:
BW
REVIEWED BY:
DBW
SCALE:
AS NOTED

BAR IS ONE INCH ON ORIGINAL DRAWING
0" 1"
IF NOT ONE INCH ON THIS SHEET, ADJUST SCALES ACCORDINGLY

SHEET
SW-5

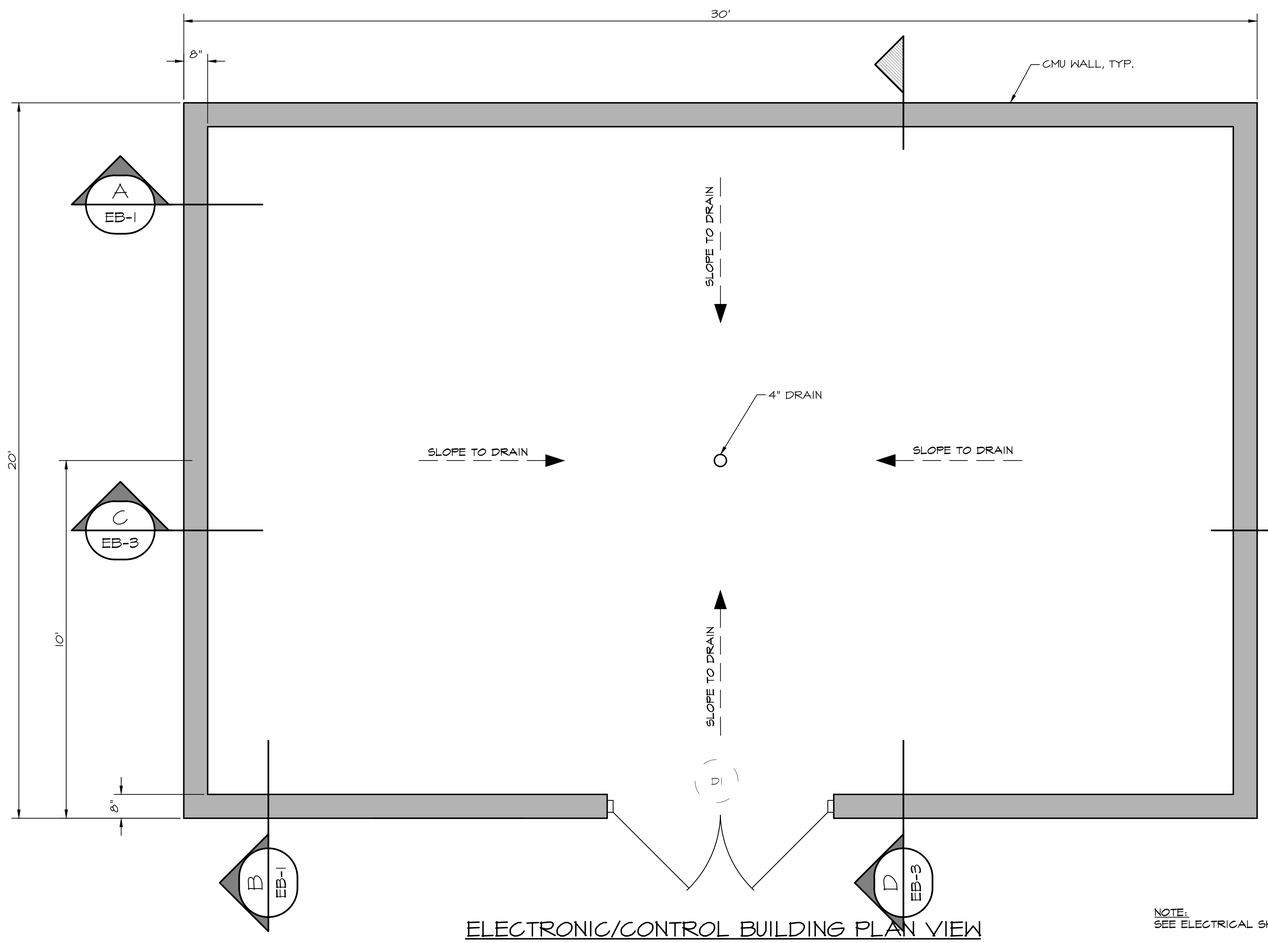

ELECTRONIC/CONTROL BUILDING PLAN VIEW

SCALE: 1/4"=1'-0"

DOOR SCHEDULE		
DOOR NO.	DESCRIPTION	HARDWARE
D1	6'-0" X 7'-0" STEEL INSULATED DOUBLE DOOR AND STEEL FRAME, DRIP LEDGE, AND THRESHOLD	HARDWARE SET #1

FINISH SCHEDULE	
FIN. NO.	DESCRIPTION
F1	WALL SHALL BE PAINTED PER SPECIFICATIONS. FLOORS SHALL HAVE TWO (2) COATS OF TNEMEC TNEME-GLAZE SERIES 280 WITH ONE (1) FINISH COAT OF TNEMEC CRU SERIES 290.

BUILDING NOTES:

1. ROOF TRUSSES INCLUDING ANCHOR BOLTS, AND CONNECTION FROM CMU TO ROOF SHALL BE PRE-ENGINEERED W/ SUBMITTAL STAMPED BY AN ENGINEER REGISTERED IN THE STATE OF OKLAHOMA. IT IS INTENDED THAT A COMPLETE STRUCTURAL DESIGN SHALL BE SUBMITTED.
2. ALL PRIMARY AND SECONDARY METALS SHALL BE GALVANIZED TO PREVENT CORROSION AND CERTIFIED FOR USE WITH WASTEWATER.
3. CONCRETE SLABS & WALLS SHALL BE 8" MIN., UNLESS OTHERWISE NOTED.
4. ALL FOOTINGS SHALL BE EXCAVATED AND CONCRETE SHALL BE PLACED THE SAME DAY OR THE FOOTING IS TO BE RE-EXCAVATED.
5. SAWCUTS IN CONCRETE SLABS SHALL BE MADE AS SOON AS THE CONCRETE IS OF SUFFICIENT STRENGTH TO SAW WITHOUT RAVELING THE AGGREGATE. ANY TIME LAPSE GREATER THAN 8 HOURS AFTER PLACING THE CONCRETE SHALL BE PERMITTED ONLY IF APPROVED BY THE ENGINEER. FILL ALL JOINTS WITH MM-80 JOINT COMPOUND.
6. ADHESIVE ANCHORS WITH REBAR OR THREADED RODS, SHALL BE HILTI-HIT HY 200. INSTALL ACCORDING TO THE MANUFACTURE'S RECOMMENDATIONS, WHICH INCLUDED CLEANING THE HOLE WITH AIR AND USING A MANUFACTURER APPROVED DISPENSING TOOL WITH MIXING NOZZLE.
7. ALL DOWELS, ANCHOR BOLTS, EMBEDDED STEEL, ELECTRICAL CONDUITS, PIPE SLEEVES, PIPING, WATER STOPS, INSERTS, GROUNDS, AND ALL OTHER EMBEDDED ITEMS AND FORMED DETAILS SHALL BE IN PLACE BEFORE START OF CONCRETE PLACEMENT. VERIFY SIZE AND LOCATION OF ALL OPENINGS.
8. 10 MIL VAPOR RETARDED SHALL BE INSTALLED UNDER ALL FLOOR SLABS AND BE EITHER STEGO 10 MIL CLASS A VAPOR RETARDER OR VAPOR BLOCK 10 BY RAVEN INDUSTRIES. USE STEGO OR RAVEN TAPOE ON ALL LAPS AND AROUND ALL PENETRATIONS.
9. ENTIRETY OF FLOOR SHALL SLOPE TO A FLOOR DRAIN SUCH THAT NO SURFACE REMAINS FLAT. REFER EB-4 FOR CMU DETAILS.
10. FOUNDATION PREPARATION PER GENERAL NOTES.
11. SEE NORTHSIDE FOR ADDITIONAL CMU STANDARD DETAILS.

NOTE:
SEE ELECTRICAL SHEETS FOR INTERNAL BUILDING DETAILS

REGISTERED PROFESSIONAL ENGINEER
06/01/23
BRANDON WALL
21108
OKLAHOMA

WALL ENGINEERING
223 N. WASHINGTON, DURANT, OK 74701
OKLAHOMA CA #5413 EXP. JUNE 30, 2023

SUBMITTAL / REVISIONS:

DATE	BY	SUBMITTAL / REVISION
06/22	TL	ISSUED FOR BIDDING

SHAWNEE MUNICIPAL AUTHORITY
SOUTHSIDE IMPROVEMENTS
SHAWNEE, OKLAHOMA

ELECTRICAL BUILDING
FLOOR/FOUNDATION PLAN

PROJECT NO.
SHN-20-01
DATE
06/22
DRAWN BY:
TL
CHECKED BY:
BW
REVIEWED BY:
DBW
SCALE:
AS NOTED

BAR IS ONE INCH ON ORIGINAL DRAWING
0" 1"
IF NOT ONE INCH ON THIS SHEET, ADJUST SCALES ACCORDINGLY

SHEET
EB-1

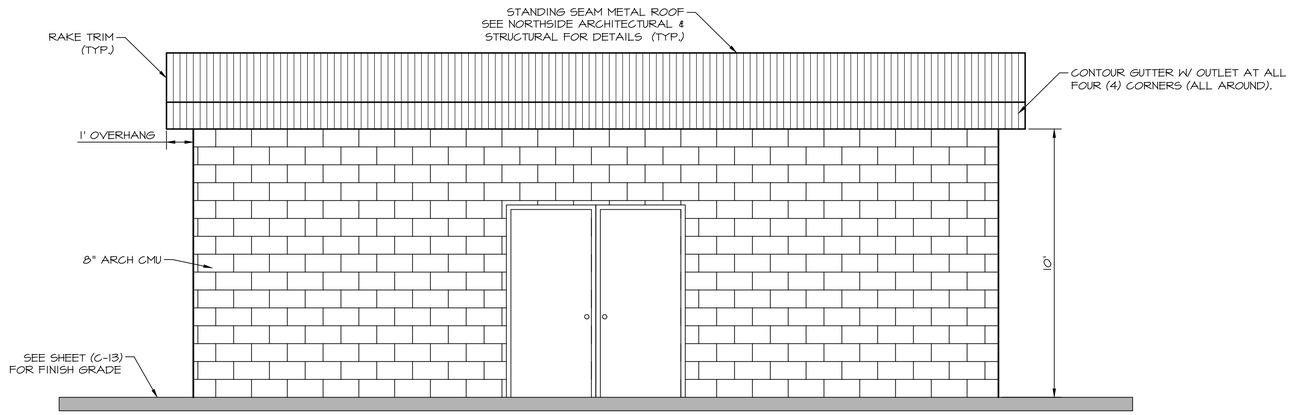

ELECTRONIC/CONTROL BUILDING SOUTH ELEVATION

SCALE: 3/8"=1'-0"

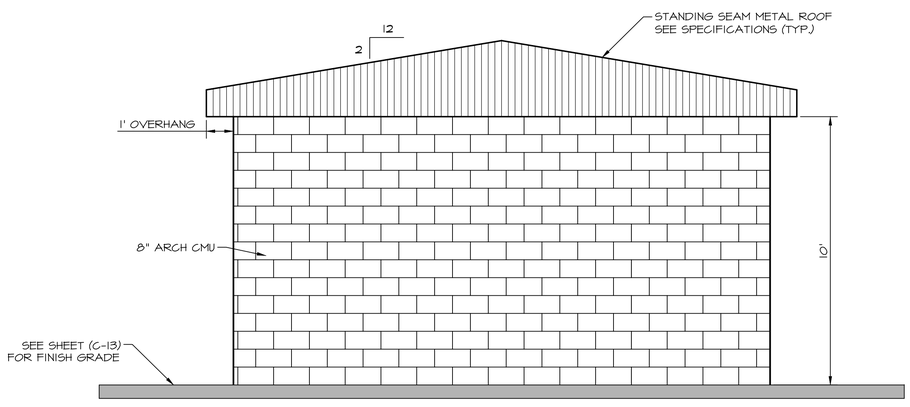

ELECTRONIC/CONTROL BUILDING WEST ELEVATION

SCALE: 3/8"=1'-0"

WALL ENGINEERING
223 N. WASHINGTON, DURANT, OK 74701
OKLAHOMA CA #5413 EXP. JUNE 30, 2023

SUBMITTAL / REVISIONS:

DATE	BY	SUBMITTAL / REVISION
06/22	TL	ISSUED FOR BIDDING

SHAWNEE MUNICIPAL AUTHORITY
SOUTHSIDE IMPROVEMENTS
SHAWNEE, OKLAHOMA

ELECTRICAL BUILDING
EXTERIOR ELEVATION VIEWS

PROJECT NO.	SHN-20-01
DATE	06/22
DRAWN BY:	TL
CHECKED BY:	BW
REVIEWED BY:	DBW
SCALE:	3/8"=1'-0"

BAR IS ONE INCH ON ORIGINAL DRAWING
0' 1'
IF NOT ONE INCH ON THIS SHEET, ADJUST SCALES ACCORDINGLY

REGISTERED PROFESSIONAL ENGINEER
BRANDON WALL
21108
OKLAHOMA

SHEET

EB-2

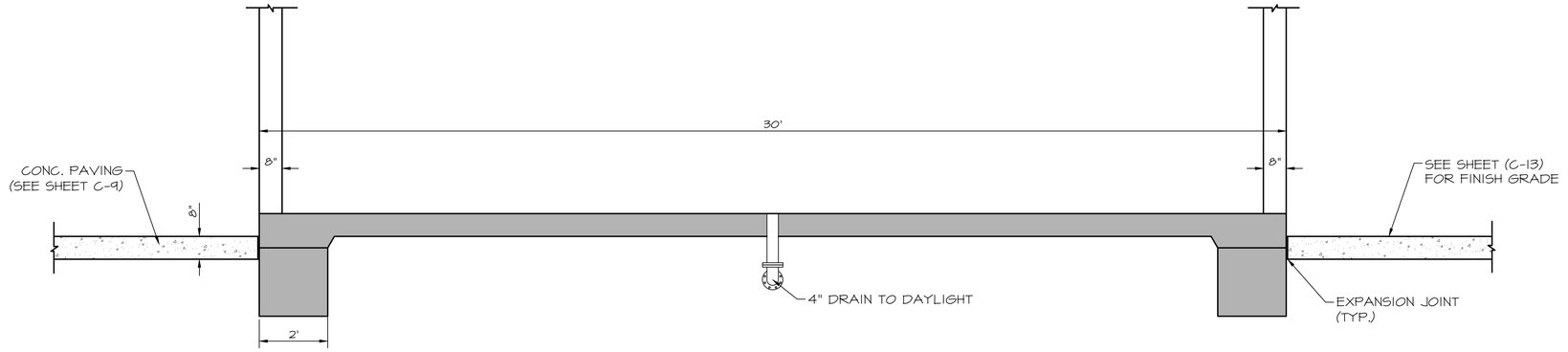

C
EB-1
SECTION
SCALE: 1/2" = 1'-0"

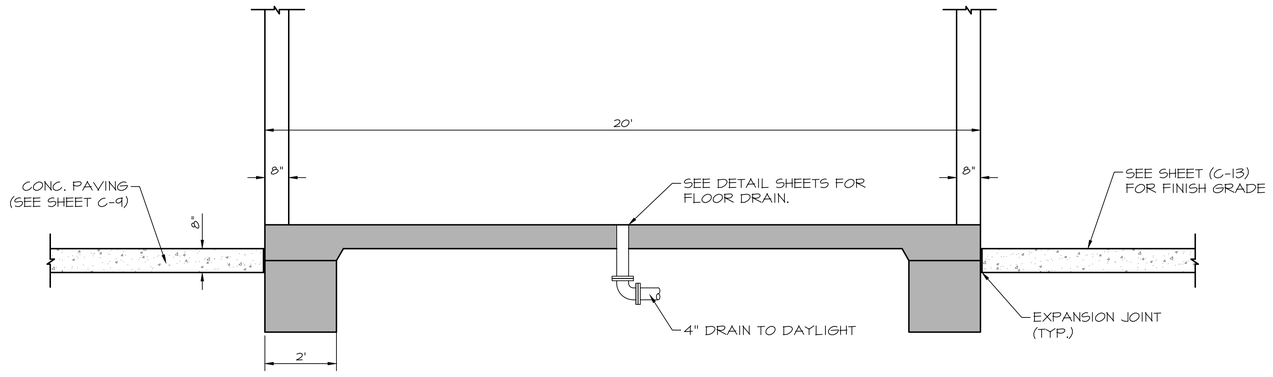

D
EB-1
SECTION
SCALE: 1/2" = 1'-0"



WALL ENGINEERING
223 N. WASHINGTON, DURANT, OK 74701
OKLAHOMA CA #5413 EXP. JUNE 30, 2023

SUBMITTAL / REVISIONS:

DATE	BY	SUBMITTAL / REVISION
06/22	TL	ISSUED FOR BIDDING

SHAWNEE MUNICIPAL AUTHORITY
SOUTHSIDE IMPROVEMENTS
SHAWNEE, OKLAHOMA

ELECTRICAL BUILDING
FOUNDATION SECTION VIEWS

PROJECT NO.
SHN-20-01
DATE
06/22
DRAWN BY:
TL
CHECKED BY:
BW
REVIEWED BY:
DBW
SCALE:
1/2"=1'-0"

BAR IS ONE INCH ON ORIGINAL DRAWING
0' 1'
IF NOT ONE INCH ON THIS SHEET, ADJUST SCALES ACCORDINGLY

SHEET
EB-3

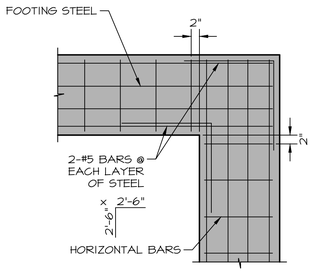

PLAN VIEW (LOOKING DOWN)

TYP. FOOTING CORNER BAR DETAIL

SCALE: N.T.S.

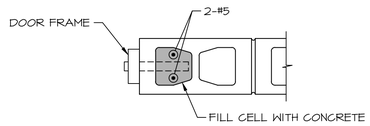

TYP. CMU JAMB DETAIL

SCALE: N.T.S.

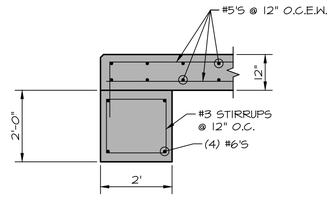

TYPICAL FOOTING AND SLAB DETAIL

SCALE: 1/2"=1'-0"

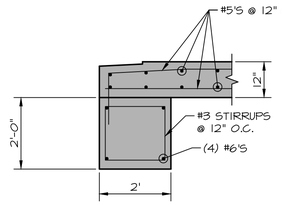

FOOTING DETAIL AT OVERHEAD DOOR

SCALE: 1/2"=1'-0"

NOTE:
SEE NORTHSIDE STRUCTURAL & ARCHITECTURAL FOR ADDITIONAL CMU DETAILS/SPECIFICATIONS

CMU LINTEL SCHEDULE

WALL THICKNESS (T)		MAX. UNIFORM LOAD (INCLUDING SELF WEIGHT OF LINTEL)			REINFORCEMENT		
NOMINAL	ACTUAL		MAX. CLEAR SPAN	DEPTH (D)	BOTTOM	TOP	STIRRUPS
8"	7 5/8"	1.0 klf	4'-0"	7 5/8"	#5	#5	N/A
8"	7 5/8"	1.1 klf	10'-0"	1'-3 5/8"	2-#5	2-#5	#3 @ 8" O.C.

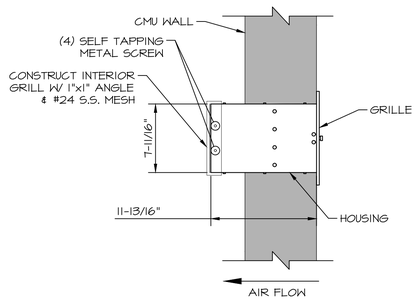

EXHAUST FAN DETAIL

SCALE: N.T.S.

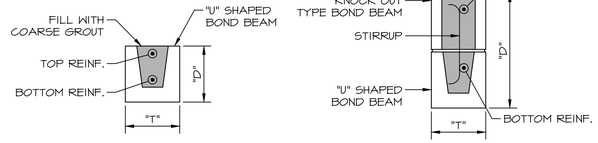

TYP. CMU LINTEL SCHEDULE

SCALE: N.T.S.

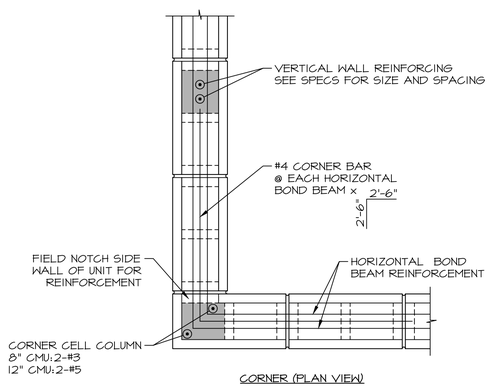

CORNER (PLAN VIEW)

TYP. CMU CORNER BAR DETAIL

SCALE: N.T.S.

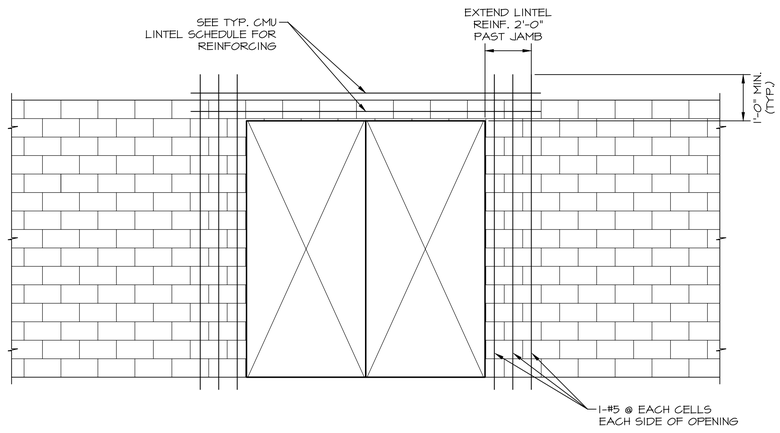

DOUBLE DOOR 6'-8" WIDE

TYP. MASONRY WALL REINFORCEMENT LAYOUT DETAIL

SCALE: N.T.S.

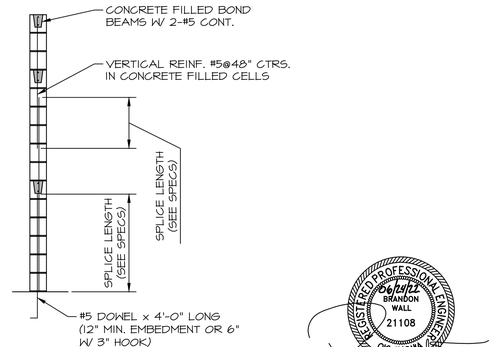

TYP. CMU REINFORCEMENT DETAIL

SCALE: N.T.S.

WALL ENGINEERING
223 N. WASHINGTON, DURANT, OK 74701
OKLAHOMA CA #5413 EXP. JUNE 30, 2023

SUBMITTAL / REVISIONS:

DATE	BY	SUBMITTAL / REVISION
06/22	TL	ISSUED FOR BIDDING

SHAWNEE MUNICIPAL AUTHORITY
SOUTHSIDE IMPROVEMENTS
SHAWNEE, OKLAHOMA

ELECTRICAL BUILDING
STRUCTURAL DETAILS

PROJECT NO.
SHN-20-01
DATE
06/22
DRAWN BY:
TL
CHECKED BY:
BW
REVIEWED BY:
DBW
SCALE:
1/2"=1'-0"

BAR IS ONE INCH ON ORIGINAL DRAWING
0' 1'
IF NOT ONE INCH ON THIS SHEET, ADJUST SCALES ACCORDINGLY

SHEET
EB-4

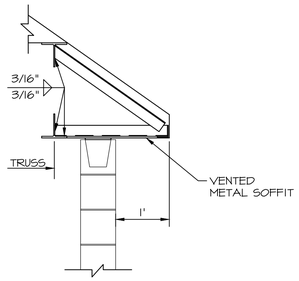

SOFFIT SECTION

SCALE: 3/4" = 1'-0"

ROOF SECTION

SCALE: 3/4" = 1'-0"

NOTE:

ROOF STRUCTURE SHOWN IS FOR REFERENCE ONLY TO OUTLINE A GENERAL IDEA OF ROOFING SYSTEM.ENTIRE ROOF/TRUSS SYSTEM (INCLUDING ANCHORING CMU) TO BE A PRE-ENGINEERED SYSTEM ARE TO BE PROVIDED BY A SINGLE MANUFACTURER. SYSTEM TO BE STAMPED BY AN OKLAHOMA STRUCTURAL ENGINEER (S.E.)



WALL ENGINEERING
223 N. WASHINGTON, DURANT, OK 74701
OKLAHOMA CA #5413 EXP. JUNE 30, 2023

SUBMITTAL / REVISIONS:

DATE	BY	SUBMITTAL / REVISION
06/22	TL	ISSUED FOR BIDDING

SHAWNEE MUNICIPAL AUTHORITY
SOUTHSIDE IMPROVEMENTS
SHAWNEE, OKLAHOMA

ELECTRICAL BUILDING
ROOF PLAN

PROJECT NO.
SHN-20-01

DATE
06/22

DRAWN BY:
TL

CHECKED BY:
BW

REVIEWED BY:
DBW

SCALE:
3/4"=1'-0"

BAR IS ONE INCH ON ORIGINAL DRAWING
0" 1"
IF NOT ONE INCH ON THIS SHEET, ADJUST SCALES ACCORDINGLY

SHEET

EB-5

NOTES ON THRUST BLOCKING

1.) ALL BLOCKING SHALL BE AGAINST UNDISTURBED HAND DUG SOIL AND SHALL BE CONCRETE HAVING A MINIMUM 28 DAY STRENGTH OF 2000 PER SQUARE INCH.

2.) THRUST CALCULATORS TO BE BASED ON THRUST DUE TO WATER PRESSURE AT 100% OF TEST PRESSURE.

THRUST = 2 AP SIN 1/2 Φ

A = AREA OF PIPE
P = WATER PRESSURE
Φ = DEFLECTION ANGLE.

3.) VERTICAL UPLIFT BLOCKS SHALL BE DESIGNED ON THE BASIS OF 150 LBS. PER CU. FT. FOR CONCRETE AND SOIL AT 120 LBS. PER CU. FT. OVER THE AREA OF BLOCK.

4.) VERTICAL DOWN THRUST BLOCKS SHALL BE DESIGNED ON THE BASIS OF 2000 PER SQ. FT. ALLOWABLE SOIL BEARING PRESSURE. DIMENSIONS MAY BE DECREASED WITH APPROVAL OF THE ENGINEER IF MEASURED SOIL CONDITIONS PERMIT. IN POOR SOIL CONDITIONS, BLOCK DIMENSIONS SHALL BE INCREASED IN PROPORTION TO ALLOWABLE BEARING VALUE.

5.) THRUST BLOCKS ON HORIZONTAL BENDS, TEES, CROSSES, AND REDUCERS SHALL BE SIZED BASED ON 24000 LBS. PER SQ. FT. OF BLOCKING SURFACE AREA IN CONTACT WITH UNDISTURBED SOIL, BLOCK DIMENSIONS MAY BE DECREASED WITH APPROVAL OF THE ENGINEER IF MEASURED SOIL CONDITIONS PERMIT. IN POOR SOIL CONDITIONS, BLOCK DIMENSIONS SHALL BE INCREASED IN PROPORTION TO THE ALLOWABLE BEARING VALUE.

6.) ALL BLOCKING SHALL HAVE A MINIMUM SOIL COVER OF 1 FT.

7.) ADDITIONAL REINFORCING MAY BE REQUIRED FOR HORIZONTAL BLOCKING TO HANDLE UNUSUAL SHEAR LOADING CONDITIONS.

8.) ANCHOR COLLARS SHALL BE REINFORCED IN ACCORDANCE WITH REINFORCING BAR SCHEDULE FOR REDUCED BLOCKS SHOWN ABOVE. STEEL ANCHOR RING IN ACCORDANCE WITH DIMENSIONS OF ANCHOR COLLAR.

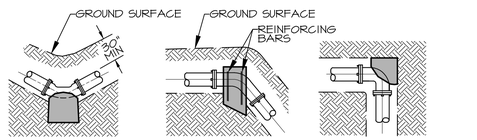

TYPICAL BLOCKING FOR VERTICAL BENDS

TYPICAL BLOCKING FOR HORIZONTAL BENDS

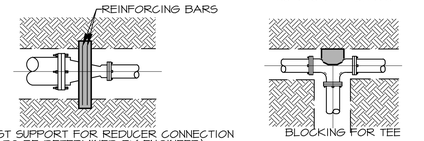

THRUST SUPPORT FOR REDUCER CONNECTION (SIZE TO BE DETERMINED BY ENGINEER)

BLOCKING FOR TEE

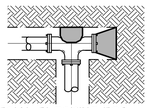
SPECIAL BLOCKING FOR TEE WITH PLUG (WHEN DIRECTED BY ENGINEER)

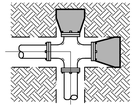
TYPICAL SECTION OF CROSS & 2 PLUG BLOCKING (WHEN DIRECTED BY ENGINEER)

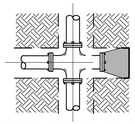
TYPICAL SECTION OF CROSS & BLOCKING (WHEN DIRECTED BY ENGINEER)

GENERAL DATA FOR BLOCKING STANDARD FITTING						
THRUST IN TONS EXERTED AT PLUGS, TEES AND BENDS FOR EACH 100 PSI OF TEST PRESSURE						
PIPE SIZE	PLUG	TEE	90° BEND	45° BEND	22.5° BEND	11.25° BEND
4" or less	0.63	0.63	0.89	0.48	0.25	0.12
6"	1.40	1.40	2.00	1.08	0.55	0.28
8"	2.50	2.50	3.55	1.92	0.98	0.49
10"	3.93	3.93	5.55	3.00	1.53	0.77
12"	5.65	5.65	8.00	4.33	2.21	1.11
14"	7.70	7.70	10.88	5.89	3.00	1.51
16"	10.05	10.05	14.21	7.69	3.85	1.97
18"	12.70	12.70	17.99	9.74	4.96	2.49
20"	15.71	15.71	22.22	12.02	6.13	3.08
24"	22.67	22.67	32.00	17.31	8.83	4.43
27"	28.63	28.63	40.48	21.91	11.17	5.61
30"	35.35	35.35	50.00	27.06	13.79	6.93
36"	50.90	50.90	72.98	38.95	19.89	9.98
42"	69.27	69.27	97.97	53.02	27.03	13.58
48"	90.48	90.48	127.96	69.25	35.30	17.74
54"	114.51	114.51	161.94	87.64	44.68	22.45

THRUST BLOCKING DETAILS
N.T.S.

MANHOLE NOTES:

1. PRECAST RISERS, CONES, FLOORS, GRADE RINGS, STEPS, AND RINGS AND COVERS SHALL BE MANUFACTURED ACCORDING TO THE MOST RECENT ASTM C-478 SPECIFICATIONS.
2. ALL MANHOLE CONSTRUCTION SHALL BE WATERTIGHT. JOINTS SHALL BE RUBBER GASKET MANHOLE SECTIONS WITH PROFILE JOINT AND FORSHEDA 114 JOINT SEALS.
3. ANY ERECTION HOLES, STEP HOLES, OR OTHER HOLES THROUGH THE WALL OF THE MANHOLE SHALL BE COVERED WITH 3" CONCRETE GROUT. GRADE RINGS SHALL BE FORMED WITH TONGUE AND GROOVE OF LUGS AND NOTCHES.
4. GRADE RINGS SHALL BE SET IN MORTAR OR PLASTIC JOINT COMPOUND.
5. WHEN FIELD CONDITIONS REQUIRE HEIGHT TO BE ADJUSTED, ADDITIONAL GRADE RINGS MAY BE USED AS DIRECTED BY THE ENGINEER.
6. WHENEVER THE SUBGRADE FOR ANY MANHOLE OR DROP MANHOLE IS OF AN UNSATISFACTORY MATERIAL, SAME SHALL BE REMOVED AND REPLACED WITH A CRUSHED ROCK BEDDING AND COMPACTED TO THE SATISFACTION OF THE ENGINEER.
7. ALL CONCRETE ENCASEMENT IN ROCK SHALL BE POURED AGAINST THE FACE OF THE ROCK. NO PAYMENT WILL BE MADE FOR EXTRA CONCRETE USED IN OVER BREAKAGE OF THE DIMENSIONS AS SHOWN ON THE TYPICAL SECTION OF CONCRETE ENCASEMENT.
8. BACKFILL EXCAVATION WITH SELECT FILL COMPACTED IN 8" LAYERS TO 95% OF MAXIMUM DENSITY WITHIN 2% OF OPTIMUM MOISTURE AS DETERMINED BY ASTM D-698.
9. CENTERLINE OF ALL PIPES ENTERING AND LEAVING SHALL PASS THROUGH CENTER OF MANHOLE.
10. CONSTRUCT FLOW CHANNEL FOR ALL PIPES ENTERING MANHOLE, INCLUDING SERVICES. MAINTAIN A CONSTANT GRADE THROUGHOUT EACH INVERT.
11. INVERT MUST HAVE A CHANNEL DEPTH OF EQUAL TO AT LEAST HALF THE LARGEST PIPE DIAMETER.
12. ALL PIPE ENTERING THE MANHOLE MORE THAN 24" ABOVE AN INVERT MUST HAVE A DROP PIPE.
13. WHENEVER SEWER PIPE IS CONNECTED INTO THE WALL OF A MANHOLE WITHOUT A RESILIENT MANHOLE PIPE CONNECTOR THE FIRST JOINT OF THE SEWER PIPE SHALL BE LOCATED A MAXIMUM OF 12" OUTSIDE THE WALL OF THE MANHOLE. CONNECTION INTO MANHOLE WITHOUT A RESILIENT CONNECTOR WILL BE USED ONLY UPON APPROVAL OF THE ENGINEER.
14. FRAME & COVER SHALL BE INSTALLED TO CONCRETE WITH 2 ROWS OF MASTIC.
15. AVERAGE WEIGHT OF CASTING SHALL NOT BE LESS THAN 95% OF: RING 228 LBS; COVER 195 LBS; TOTAL 430 LBS.
16. MANHOLES MAY HAVE EITHER PRECAST OR CAST-IN-PLACE BASES. BASE DIAMETER TO MATCH DETAILS.
17. MANHOLE AND BASE SHALL BE MANUFACTURED IN ACCORDANCE WITH C478.
18. MINIMUM BASE INSIDE DIAMETER SHALL BE BASED ON THE NUMBER AND SIZE OF THE PIPES ENTERING THE MANHOLE, THE ELEVATION OF THE PIPES, AND THE MINIMUM SPACING BETWEEN THE PIPES.

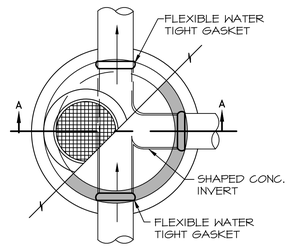

STANDARD MANHOLE PLAN
N.T.S.

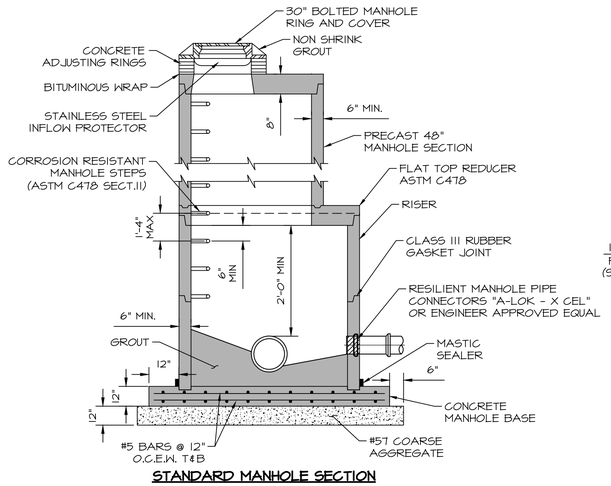

STANDARD MANHOLE SECTION

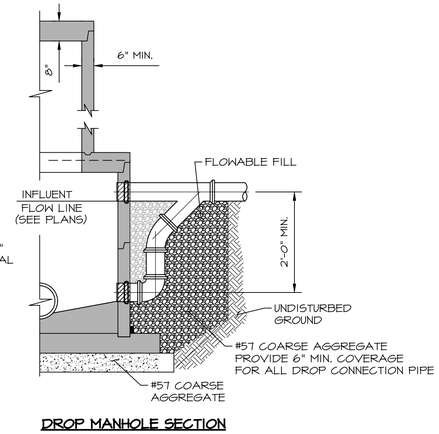

DROP MANHOLE SECTION

STANDARD MANHOLE DETAILS
N.T.S.

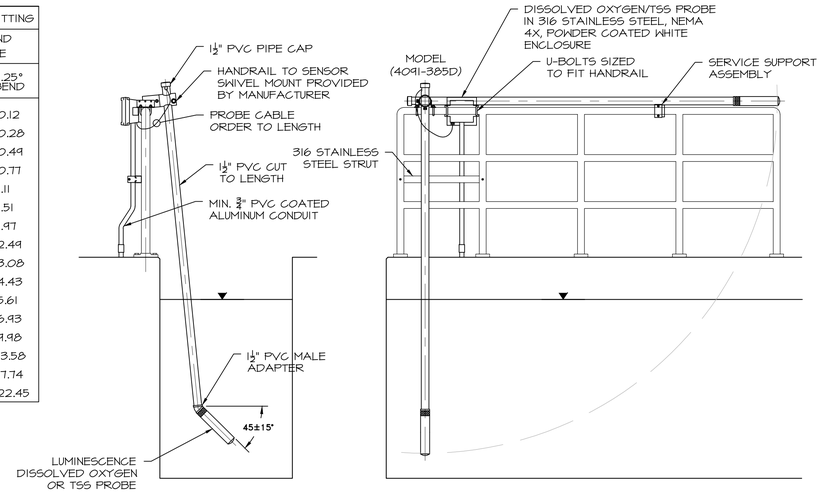

SECTION ELEVATION

NOTES
1. INSTALL TRANSMITTER TO MANUFACTURER'S SPECIFICATIONS AND REQUIREMENTS.
2. CONSULT MANUFACTURER'S INSTALLATION MANUAL FOR CORRECT PROBE INSERTION LENGTH.
3. USE 316 SST FITTINGS FOR ALL PROCESS CONNECTIONS.
4. ANCHOR SYSTEM SHALL BE HILTI HY 150 W 316SS MATERIALS.
5. ENSURE THE SENSOR CANNOT MAKE CONTACT WITH THE TANK WALL.
6. ENSURE THAT SENSOR IS FULLY IMMERSED AT ALL TIMES.

DISSOLVED OXYGEN/TSS PROBE DETAIL
N.T.S.



WALL ENGINEERING
223 N. WASHINGTON, DURANT, OK 74701
OKLAHOMA CA #5413 EXP. JUNE 30, 2023

SUBMITTAL / REVISIONS:

DATE	BY	SUBMITTAL / REVISION
06/22	TL	ISSUED FOR BIDDING

SHAWNEE MUNICIPAL AUTHORITY
SOUTHSIDE IMPROVEMENTS
SHAWNEE, OKLAHOMA

MISCELLANEOUS DETAILS

PROJECT NO.
SHN-20-01
DATE
06/22
DRAWN BY:
JR
CHECKED BY:
BW
REVIEWED BY:
DBW
SCALE:
AS NOTED

BAR IS ONE INCH ON ORIGINAL DRAWING
0" 1"
IF NOT ONE INCH ON THIS SHEET, ADJUST SCALES ACCORDINGLY

SHEET
DT-1

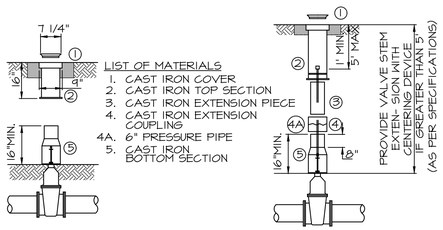

LIST OF MATERIALS

1. CAST IRON COVER
2. CAST IRON TOP SECTION
3. CAST IRON EXTENSION PIECE
4. CAST IRON EXTENSION COUPLING

4A. 6" PRESSURE PIPE

5. CAST IRON BOTTOM SECTION

NOTES:

1. EXACT WORDING FOR VALVE DESCRIPTION PLATE SHALL BE DETERMINED BY THE ENGINEER PRIOR TO FABRICATION.
2. EXTENSION PIECE CAN BE CUT TO LENGTH REQUIRED.
3. PROVIDE 1'-6" X 1'-6" X 8" THICK CONCRETE AROUND TOP OF VALVE BOX UNLESS OTHERWISE NOTED OR OUTLINED ON SPECIFIC VALVE DETAILS.
4. SEE VALVE DETAILS/SPECS FOR ADDITIONAL VALVE DETAILS.

VALVE BOX INSTALLATION
N.T.S.

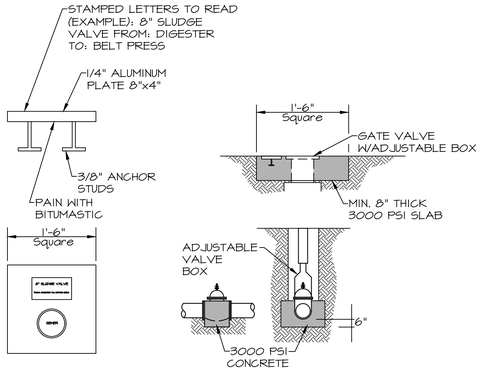

VALVE BLOCKING DETAIL
N.T.S.

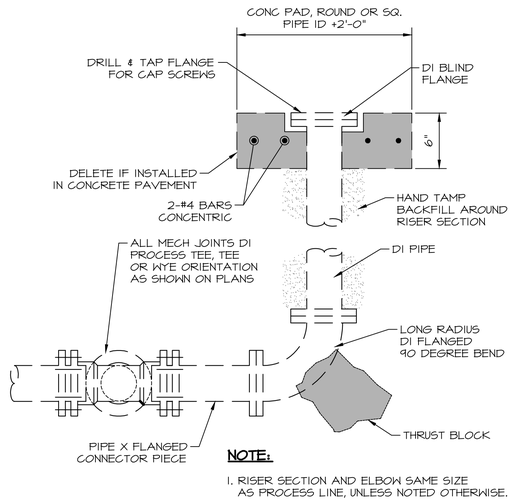

NOTE:

1. RISER SECTION AND ELBOW SAME SIZE AS PROCESS LINE, UNLESS NOTED OTHERWISE.

PROCESS LINE CLEAN-OUT SETTING
N.T.S.

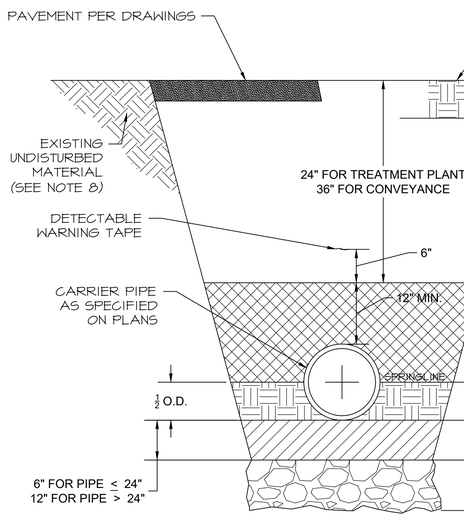

BEDDING / BACKFILL REQUIREMENTS AND MATERIAL DESIGNATIONS (SEE MATERIAL DESCRIPTIONS)								
	GRAVITY MAINS		PRESSURE MAINS		UNDER PAVED AREAS		STREET CROSSINGS	
	DI / CONC.	HDPE / PVC	DI / CONC.	HDPE / PVC	DI / CONC.	HDPE / PVC	DI / CONC.	HDPE / PVC
TOPFILL	8	8	8	8	11	11	11	11
FINAL BACKFILL	13	13	13	13	10	10	10	10
INITIAL BACKFILL	12	1/2/7 *	12	12	1/2	1/2/7 *	1/2	1/2/7 *
HAUNCHING	2	1/2/7 *	2	1/2/7 *	2	1/2/7 *	2	1/2/7 *
BEDDING	2	2	2	2	2	2	2	2
FOUNDATION MATERIAL	CRUSHED ROCK OR RIP RAP (WHEN REQ'D)							

* LINES SMALLER THAN 18" SHALL BE #67 BEDDING.
LINES 18" AND LARGER SHALL BE #57 BEDDING.
SAND MAY BE SUBSTITUTED FOR PVC/HDPE LINES 8" & SMALLER.

MATERIAL DESCRIPTIONS
(SEE SPECIFICATION SECTION 31_23_24)

1. #57 CRUSHED ROCK
2. #67 CRUSHED ROCK
3. FINE CRUSHED ROCK
4. FLOWABLE FILL
5. SELECT BACKFILL MATERIAL
6. PEA GRAVEL
7. SAND
8. TOPSOIL (NO STONES OR ROCKS)
9. SELECT FILL
10. AGGREGATE BASE OR CONTROLLED LOW STRENGTH MATERIAL
11. PAVEMENT MATCHING OR AS SPECIFIED IN DRAWINGS
12. SELECT EXCAVATED MATERIAL (NO STONES LARGER THAN 1")
13. SELECT EXCAVATION MATERIAL (NO STONES LARGER THAN 4")

UTILITY BEDDING DETAIL
N.T.S.

EMBEDDMENT DETAIL NOTES

1. MINIMUM TRENCH WIDTH AT SPRINGLINE OF PIPE
   a. PIPES < 4" — 18"
   b. PIPES 6" - 18" — 12" + O.D.
   c. PIPES > 20" — 24" + O.D.
2. EXCAVATION MAY BE WIDENED ABOVE THE EMBEDMENT ZONE AT THE CONTRACTOR'S OPTION AND EXPENSE.
3. EMBEDMENT / BACKFILL LIFT THICKNESS (MAXIMUM)
   a. FINAL BACKFILL — 12" LIFTS TYPICAL; 6" LIFTS UNDER PAVING / STRUCTURES
   b. INITIAL BACKFILL — 6" LIFTS
   c. HAUNCHING — 4" LIFTS
   d. BEDDING — 4" LIFTS
4. TRENCH SLOPE, SHORING, BENCHING, ETC TO BE DETERMINED BY THE CONTRACTOR. CONTRACTOR IS SOLELY RESPONSIBLE FOR TRENCH SAFETY AND OSHA COMPLIANCE.
5. EXCAVATION FOR BELL HOLE REQUIRED FOR ALL PIPING <4". CONTRACTOR SHALL SELECT AND UTILIZE CONSTRUCTION METHODS SUCH THAT ALL AREAS UNDER THE PIPE HAUNCHES ARE FILLED WITH THE APPROPRIATE MATERIAL AND COMPACTED.
6. ALL MATERIALS UNDER PAVING / STRUCTURES SHALL BE COMPACTED TO 95% MODIFIED PROCTOR DENSITY AT 4% OPTIMUM MOISTURE CONTENT BY SHEEPSFOOT OR OTHER SUITABLE MECHANICAL COMPACTION METHODS AT SPECIFIED LIFT THICKNESSES. COMPACTION EQUIPMENT MUST NOT COME IN CONTACT WITH CARRIER PIPE NOR CASING PIPE.
7. IF TRENCH BOTTOM IS OVER-EXCAVATED BELOW INTENDED GRADE, FILL THE OVER-EXCAVATION WITH EMBEDMENT MATERIAL AND COMPACT AT THE DENSITY SPECIFIED FOR THE EMBEDMENT MATERIAL.
8. THE EXISTING NATIVE MATERIAL WITHIN THE LIMITS OF THE EMBEDMENT ZONE IS TO REMAIN UNDISTURBED OR REPLACED WITH SPECIFIED PIPE EMBEDMENT MATERIAL IF OVER-EXCAVATION TAKES PLACE. REPLACEMENT WITH ONSITE MATERIAL WILL NOT BE ACCEPTABLE.
9. IF BEDDING DETAIL CONFLICTS WITH ANY OTHER DETAIL THE MORE STRINGENT SHALL APPLY.



WALL ENGINEERING
223 N. WASHINGTON, DURANT, OK 74701
OKLAHOMA CA #5413 EXP. JUNE 30, 2023

SUBMITTAL / REVISIONS:

DATE	BY	SUBMITTAL / REVISION
06/22	TL	ISSUED FOR BIDDING

SHAWNEE MUNICIPAL AUTHORITY
SOUTHSIDE IMPROVEMENTS
SHAWNEE, OKLAHOMA

MISCELLANEOUS DETAILS DETAILS

PROJECT NO.: SHN-20-01
DATE: 06/22
DRAWN BY: JR
CHECKED BY: TA
REVIEWED BY: DBW
SCALE: AS NOTED

BAR IS ONE INCH ON ORIGINAL DRAWING
0" 1"
IF NOT ONE INCH ON THIS SHEET, ADJUST SCALES ACCORDINGLY

SHEET
DT-2

TYPICAL JOINT DETAILS

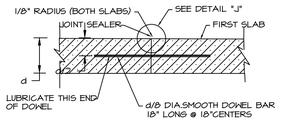

DOWELED CONSTRUCTION JOINT
N.T.S.

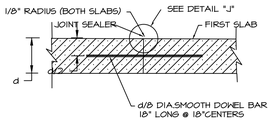

TIED CONSTRUCTION JOINT
N.T.S.

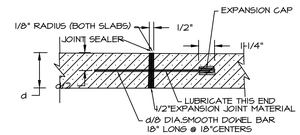

DOWELED EXPANSION JOINT
N.T.S.

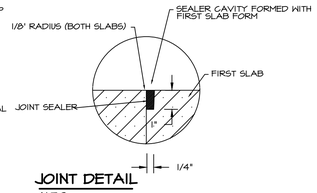

JOINT DETAIL
N.T.S.

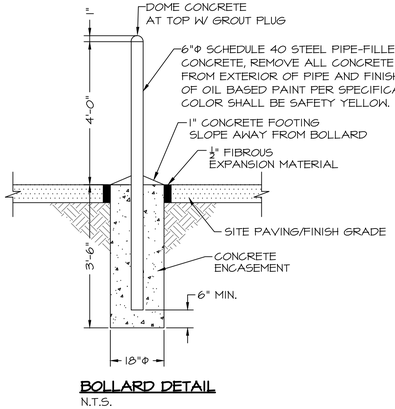

BOLLARD DETAIL
N.T.S.

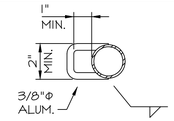

ALUM. LATCH RING
N.T.S.

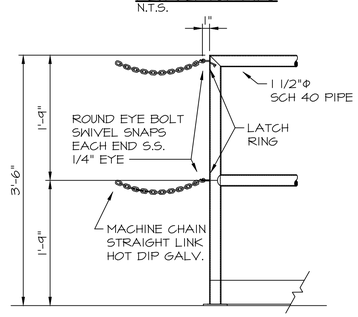

TYP. SAFETY CHAIN
N.T.S.

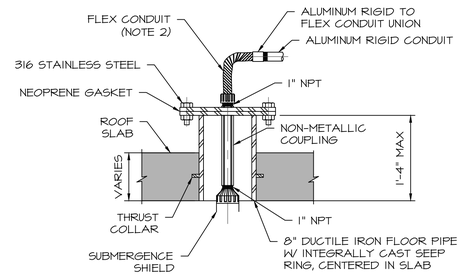

NOTES
1. COAT FLOOR PIPE W/ SPECIFIED PAINT SYSTEM PRIOR TO CONCRETE PLACEMENT.
2. FLEXIBLE CONDUIT SHALL BE SIZED FOR REMOVAL OF LEVEL ELEMENT.

ULTRASONIC LEVEL INSTALLATION - CONCRETE
N.T.S.

JOINT CROSS SECTIONS

CONSTRUCTION JOINT - LONGITUDINAL OR TRANSVERSE
CREATED LONGITUDINALLY BY THE EDGES OF PAVING LANES OR TRANSVERSELY BY THE END OF A DAY'S WORK.

(ALTERNATE)

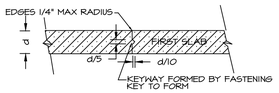

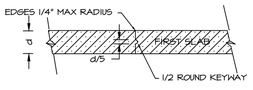

CONTROL JOINT -
LONGITUDINAL OR TRANSVERSE
LONGITUDINAL CONTROL JOINT: SAWED, HAND-FORMED, OR PREMOLDED FILLER
TRANSVERSE CONTROL JOINT: SAWED, HAND-FORMED, OR PREMOLDED FILLER

ISOLATION JOINT

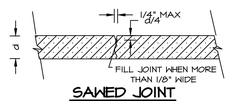

SAWED JOINT
N.T.S.

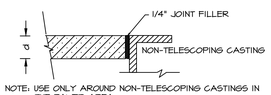

NOTE: USE ONLY AROUND NON-TELESCOPING CASTINGS IN THE PAVED AREA

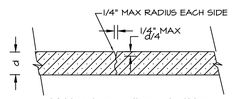

HAND-FORMED JOINT
N.T.S.

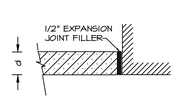

NOTE: USE ONLY AT BUILDINGS OR OBJECTS ABUTTING THE PAVED AREA

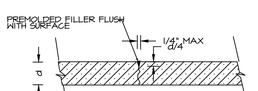

PREMOLDED FILLER JOINT
N.T.S.

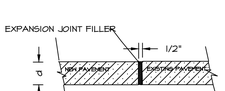

NOTE: USE ONLY AT JUNCTION OF NEW AND EXISTING PAVEMENT. THICKEN SLAB WHENEVER PRACTICAL.

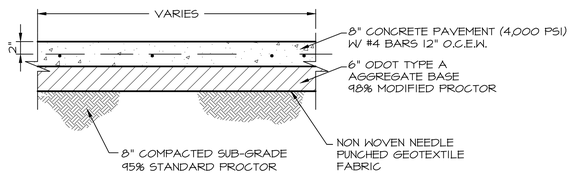

NEW CONCRETE PAVING SECTION
N.T.S.

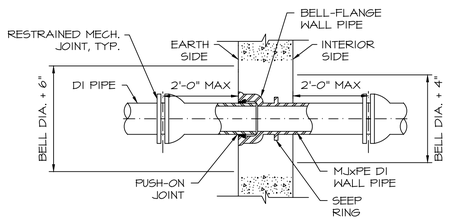

NOTE:
1. COAT WALL PIPE WITH SPECIFIED PAINT SYSTEM PRIOR TO CONCRETE PLACEMENT.
2. TYPICAL FOR ALL PIPE PENETRATIONS THROUGH CONCRETE WALLS, REGARDLESS OF BEING SHOWN ON DRAWINGS OR NOT.

N.T.S.

WALL PIPE

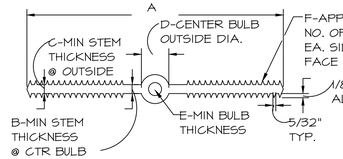

SIZE	A	B	C	D	E	F
4"x3/16"	4"	3/16"	3/16"	3/4"	1/4"	4
6"x3/8"	6"	3/8"	3/8"	7/8"	1/4"	6
9"x3/8"	9"	3/8"	3/8"	1"	1/4"	8

NOTES:
1. MATERIAL QUALITY PER SPECIFICATIONS.
2. DIM REQUIREMENTS INDICATED SHOULD BE GIVEN TO SUPPLIERS PRIOR TO PLACING ORDERS.
3. NON-ROUND CENTER BULBS SHALL HAVE A MIN. OUTSIDE DIM. OF 'D'.

PLASTIC WATERSTOP
N.T.S.



WALL ENGINEERING
223 N. WASHINGTON, DURANT, OK 74701
OKLAHOMA CA #5413 EXP. JUNE 30, 2023

SUBMITTAL / REVISIONS:

DATE	BY	SUBMITTAL / REVISION
06/22	TL	ISSUED FOR BIDDING

SHAWNEE MUNICIPAL AUTHORITY
SOUTHSIDE IMPROVEMENTS
SHAWNEE, OKLAHOMA

MISCELLANEOUS DETAILS

PROJECT NO.
SHN-20-01
DATE
06/22
DRAWN BY:
JR
CHECKED BY:
TA
REVIEWED BY:
DBW
SCALE:
AS NOTED

BAR IS ONE INCH ON ORIGINAL DRAWING
0" 1"
IF NOT ONE INCH ON THIS SHEET, ADJUST SCALES ACCORDINGLY

SHEET
DT-3

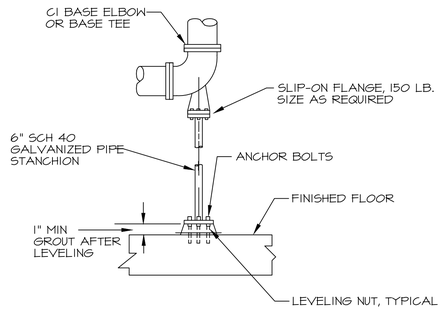

BASE FITTING PIPE SUPPORT
N.T.S.

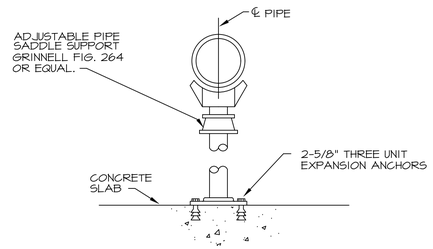

TYPICAL PIPE SUPPORT DETAIL
N.T.S.

PIPE SPAN AND SUPPORT ROD SIZE			
MAXIMUM PIPE SPAN (FEET)			
STEEL	COPPER	PLASTIC SEE NOTE A1	DUCTILE IRON SEE NOTE A2
5	5	CONTINUOUS	-
5	5	5	-
5	5	5	-
5	5	5	-
10	5	5	
10	10	5	
10	20	5	
10	20	5	
15	20	5	
15	20	5	
20	-	5	
20	-	10	
20	-	-	
25	-	-	
25	-	-	
25	-	-	
30	-	-	
30	-	-	

12 FEET FOR PRESSURE PIPE

10 FEET FOR SOIL PIPE

NOTES:

A1. SPAN SHOWN IS FOR SCHEDULE 80 PVC PIPE AT 100° F. SPANS FOR OTHER PLASTICS, OTHER PVC PIPE SCHEDULES AND PIPES AT HIGHER TEMPERATURES SHALL BE SHORTENED IN ACCORDANCE WITH THE PIPE MANUFACTURER'S RECOMMENDATIONS. "CONTINUOUS" MEANS PIPE SHALL BE IN UNISTRUT POWER -STRUT OR SIMILAR CHANNEL.

A2. PROVIDE A MINIMUM OF ONE PIPE HANGER PER PIPE LENGTH, WITHIN 4-INCHES OF THE BELL.

A3. HANGERS AND SUPPORTS SHALL BE STAINLESS STEEL. NUT, BOLTS, WASHERS AND ALL EMBEDDED ITEMS SHALL BE TYPE 316 STAINLESS STEEL UNLESS OTHERWISE IN CONTACT WITH NON-COMPATIBLE MATERIAL.

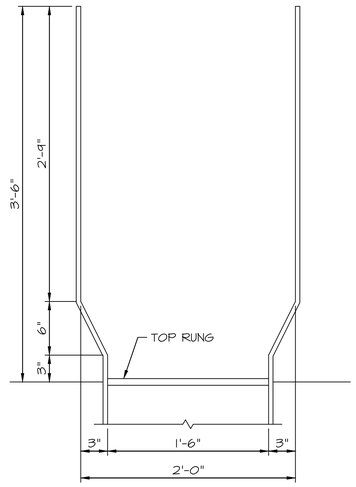

LADDER WALKWAY EXTENSION
N.T.S

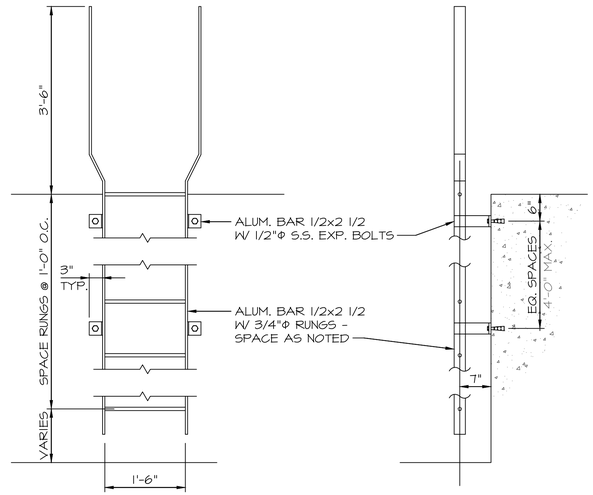

ALUMINUM LADDER DETAIL
N.T.S

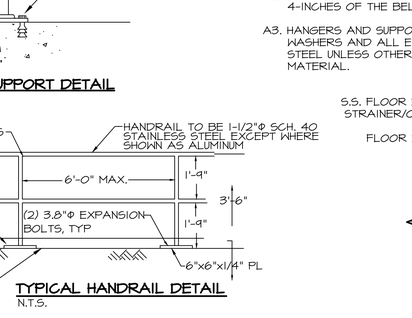

TYPICAL HANDRAIL DETAIL
N.T.S.

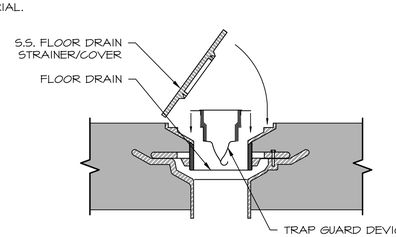

FLOOR DRAIN TRAP GUARD
N.T.S.

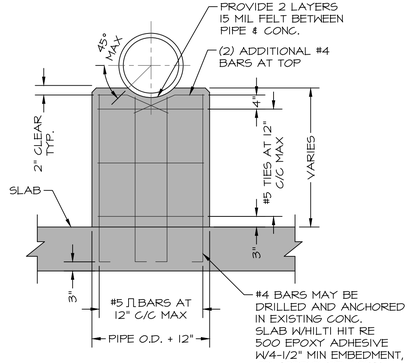

TYPICAL INTERIOR PIPE SUPPORT
N.T.S.

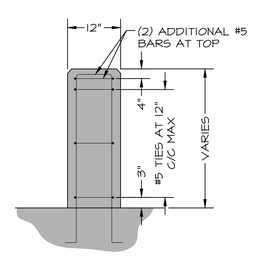

TYPICAL SECTION THROUGH CONCRETE PEDESTAL FOR PIPE SUPPORTS
N.T.S.



NON-POTABLE WARNING SIGN
N.T.S.

NOTES:

1. SIGN SHALL BE 3/8" THICK PLASTIC RESISTANT TO SUNLIGHT (ULTRAVIOLET) DETERIORATION.
2. COLORS:
   LETTERS - WHITE
   FAUCET AND GLASS - YELLOW OR WHITE
   Ø WARNING SYMBOL - RED
   BACKGROUND - DARK PURPLE
   OUTER BODER - WHITE
   INNER BORDER - WHITE
3. NON-POTABLE WARNING SIGNS SHALL BE POSTED AT ALL NON-POTABLE POST HYDRANTS, YARD HYDRANTS AND HOSE BIBS.

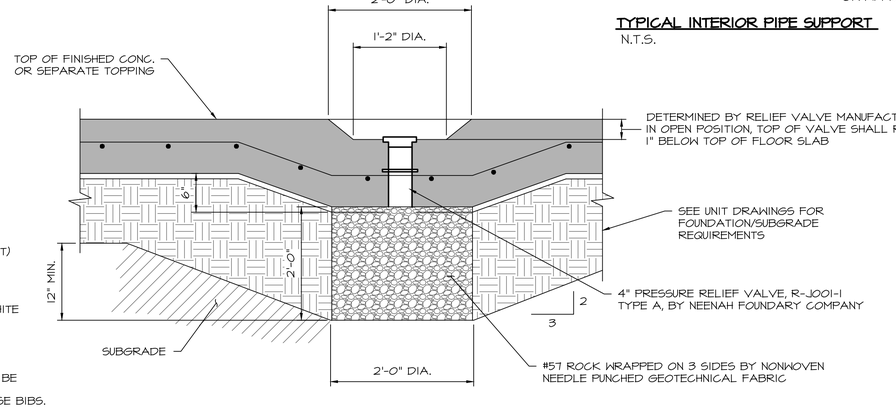

PRESSURE RELIEF VALVE
N.T.S.



WALL ENGINEERING
223 N. WASHINGTON, DURANT, OK 74701
OKLAHOMA CA #5413 EXP. JUNE 30, 2023

SUBMITTAL / REVISIONS:

DATE	BY	SUBMITTAL / REVISION
06/22	TL	ISSUED FOR BIDDING

SHAWNEE MUNICIPAL AUTHORITY
SOUTHSIDE IMPROVEMENTS
SHAWNEE, OKLAHOMA

MISCELLANEOUS DETAILS

PROJECT NO.	SHN-20-01
DATE	06/22
DRAWN BY:	JR
CHECKED BY:	TA
REVIEWED BY:	DBW
SCALE:	AS NOTED

BAR IS ONE INCH ON ORIGINAL DRAWING
0" 1"
IF NOT ONE INCH ON THIS SHEET, ADJUST SCALES ACCORDINGLY

SHEET

DT-4

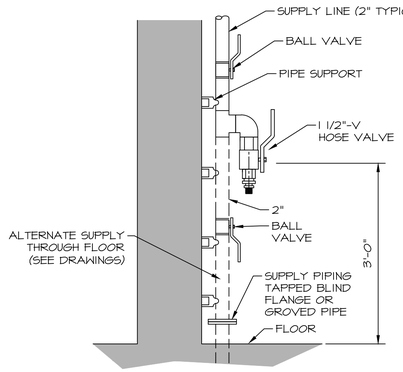

NOTE:

1. ROTATE HOSE VALVE 30° OFF WALL.
2. SUPPLY WALL MOUNTED HOSE RACKETS ADJACENT AT ALL HOSE VALVES.
3. PROVIDE WARNING SIGN PER DETAIL SHEET.
4. CONTRACTOR SHALL PROVIDE A ¾" AND 1-½" THREADED OUTLET WITH CAMLOK QUICK DISCONNECT ADAPTERS AND VALVE ON EACH YARD HYDRANT IN ADDITION TO THE 2" HYDRANT VALVE. YARD HYDRANT SHALL BE Z1340 SERIED OR APPROVED EQUAL.

INTERIOR HOSE VALVE DETAIL
N.T.S

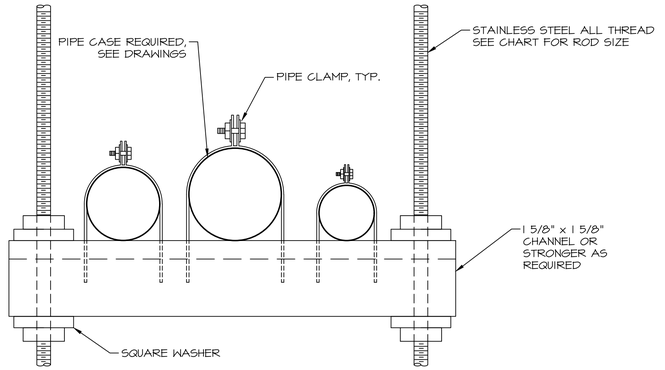

TRAPEZE PIPE SUPPORT
N.T.S

ALL THREAD MINIMUM SUPPORT ROD SIZE

PIPE SIZE	≤ 6"	8"	10"-12"	14"	16"-18"	20"	24"
ALL-THREAD SIZE	3/8"	1/2"	5/8"	3/4"	7/8"	1"	1-1/4"

STEEL AND DUCTILE IRON SUPPORT SPACING (MAX.)

PIPE SIZE	≤ 1"	1¼" - 2 ½"	3"-4"	6"-8"	10"-12"	14"-18"	20"-24"
SPACING (FEET)	6	8	10	12	14	16	18

STAINLESS STEEL SUPPORT SPACING

PIPE SIZE	1"-6"	8"-12"	14"-16"	18"-24"
SPACING (FEET)	8	10	12	14

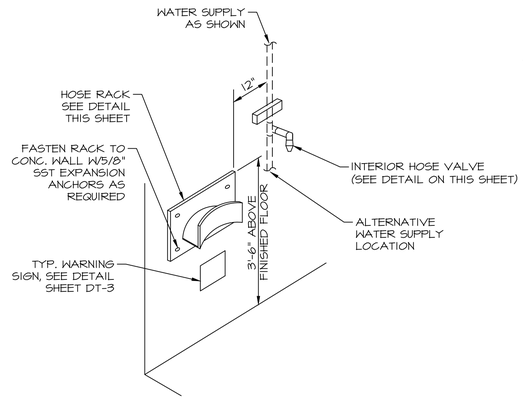

WALL MOUNTED UTILITY STATION
N.T.S

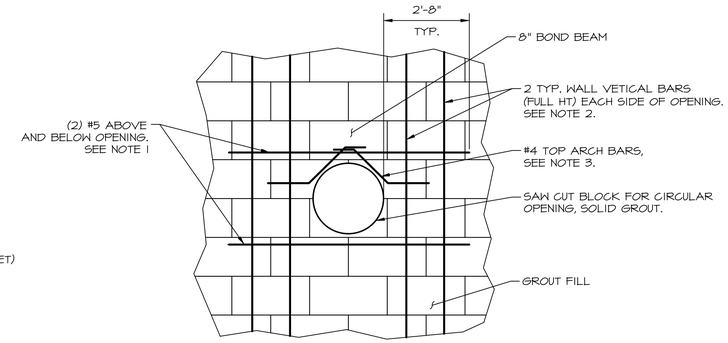

CMU PIPE OPENING REINFORCEMENT
N.T.S

NOTES:

1. AT ADJACENT OPENING WITH LESS THAN 8'-0" WALL BETWEEN, CONTINUE HORIZONTAL REINFORCING TO 2'-8" BEYOND FURTHEST OPENING.
2. LOCATE VERTICAL BARS CENTERED IN 2 ADJACENT CELLS IN 8" WALLS AND EACH FACE IN SINGLE CELL IN 12" WALLS. LAP 48 BAR DIAMETERS WITH MATCHING FOUNDATION DOWELS.
3. LOCATE #4 ARCH BARS CENTERES IN 8" WALLS, AND EACH FACE IN 12" WALLS.

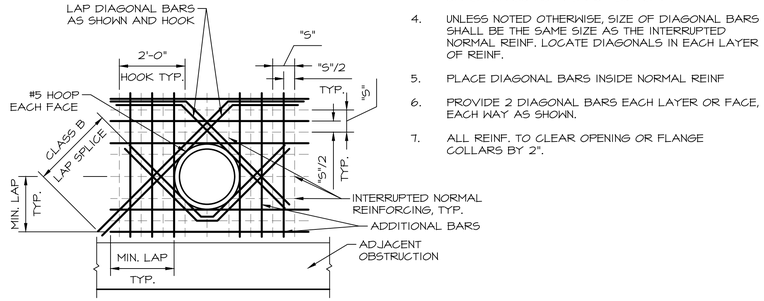

ADDITIONAL REINFORCEMENT @ OPENINGS IN WALLS
N.T.S

NOTES:

1. NUMBER OF ADDITIONAL REINF. BARS AT EACH SIDE OF OPENING SHALL EQUAL HALF THE NUMBER OF INTERRUPTED BARS IN EACH LAYER OF REINF.
2. SIZE OF ADDITIONAL REINF. BARS TO EQUAL SIZE OF INTERRUPTED REINF. BARS.
3. PROVIDE STD HOOKS FOR BARS IF LAP LENGTH EXTENSION CANNOT BE OBTAINED AT JOINTS OR OTHER OBSTRUCTIONS. PLACE ADDITIONAL BARS IN SAME PLANES AS INTERRUPTED REINF.
4. UNLESS NOTED OTHERWISE, SIZE OF DIAGONAL BARS SHALL BE THE SAME SIZE AS THE INTERRUPTED NORMAL REINF. LOCATE DIAGONALS IN EACH LAYER OF REINF.
5. PLACE DIAGONAL BARS INSIDE NORMAL REINF
6. PROVIDE 2 DIAGONAL BARS EACH LAYER OR FACE, EACH WAY AS SHOWN.
7. ALL REINF. TO CLEAR OPENING OR FLANGE COLLARS BY 2".

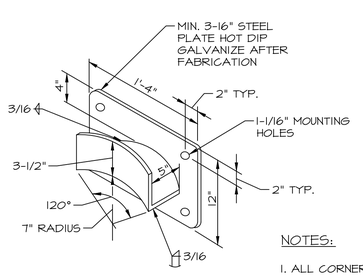

NOTES:

1. ALL CORNERS SHALL HAVE A 3/4" RADIUS
2. HOSE RACKS TO BE PLACED AT ALL HYDRANTS ADJACENT TO BUILDING/STRUCTURES.
3. LOCATION TO BE FIELD DETERMINED.

HOSE RACK
N.T.S

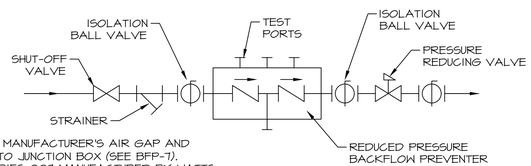

NOTES

1. INSTALL RPZ WITH MANUFACTURER'S AIR GAP AND ROUTE FULL-SIZE TO JUNCTION BOX (SEE BFP-7).
2. RPZ SHALL BE SERIES 009 MANUFACTURED BY WATTS
3. INSTALL PIPE STANDS TO SUPPORT THE COMPONENTS. DO NOT SUPPORT ASSEMBLIES FROM PIPING. INSTALL BEARING PLATES ON CONCRETE FLOOR UNDER EACH SUPPORT.
4. ALL COMPONENTS TO BE CORROSION RESISTANT.
5. DRAIN MAY NOT BE OUTLINED ON DRAWINGS FOR CLARITY. FIELD ROUTE TO DRAIN.

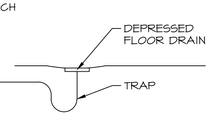

RPZ DOMESTIC WATER RISER (INTERIOR)
N.T.S.

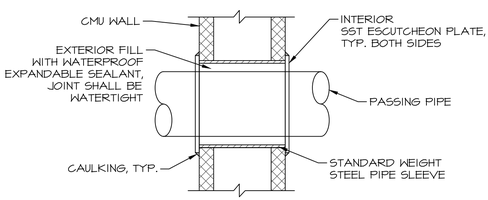

CMU WALL PIPE PENETRATION
N.T.S



WALL ENGINEERING
223 N. WASHINGTON, DURANT, OK 74701
OKLAHOMA CA #5413 EXP. JUNE 30, 2023

SUBMITTAL / REVISIONS:

DATE	BY	SUBMITTAL / REVISION
06/22	TL	ISSUED FOR BIDDING

SHAWNEE MUNICIPAL AUTHORITY
SOUTHSIDE IMPROVEMENTS
SHAWNEE, OKLAHOMA

MISCELLANEOUS DETAILS

PROJECT NO. SHN-20-01
DATE 06/22
DRAWN BY: JR
CHECKED BY: TA
REVIEWED BY: DBW
SCALE: AS NOTED

BAR IS ONE INCH ON ORIGINAL DRAWING
0' 1'
IF NOT ONE INCH ON THIS SHEET, ADJUST SCALES ACCORDINGLY

SHEET
DT-5

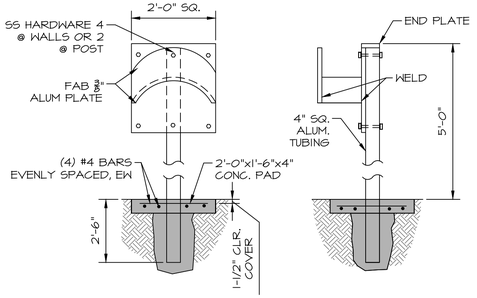

SELF SUPPORTED HOSE RACK

N.T.S

NOTES:

1. PROVIDE HOSE RACK AT WALL & YARD HYDRANTS UNLESS A HOSE REEL OR WALL MOUNTED UTILITY STATION IS INDICATED ON THE DRAWINGS.
2. LESS POST & CONC. FOR WALL MT INSTALLATION
3. MATERIALS TO BE ALUMINUM OR OTHER CORROSION RESISTANT MATERIAL AS APPROVED BY ENGINEER

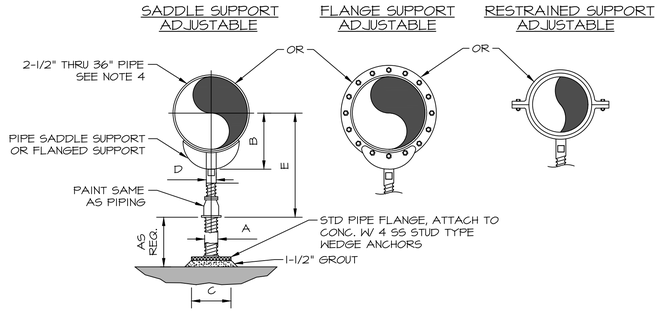

ADJUSTABLE FLOOR MOUNTED PIPE SUPPORT

N.T.S

NOTES:

1. PROVIDE HALF ROUND RIGID INSULATION & INSULATION PROTECTION SHIELD WHERE PIPING IS INSULATED
2. PROVIDE NEOPRENE WAFFLE INSULATION PAD, SIMILAR TO MASON TYPE "W" OR KORFUND 40, UNDER SUPPORT FOOT WHEN PIPING IS ISOLATED OR SUPPORT IS ADJACENT TO MECHANICAL EQUIUPMENT.
3. FOR BASE, HEIGHT & FLANGE DIMENSIONS, SEE TABLE.

DIMENSION TABLE

PIPE SIZE	A	B	C	D	E MIN	E MAX
2-1/2"	2-1/2"	3-1/2"	9"	1-1/2"	8"	13"
3"	2-1/2"	3-3/4"	9"	1-1/2"	8-1/4"	1'-1 1/4"
3-1/2"	2-1/2"	4"	9"	1-1/2"	8-1/2"	13-1/2"
4"	3"	4-1/4"	9"	2-1/2"	9-1/4"	14"
5"	3"	4-7/8"	9"	2-1/2"	10"	14-3/4"
6"	3"	5-1/2"	9"	2-1/2"	10-1/2"	15-1/4"
8"	3"	6-7/8"	9"	2-1/2"	11-3/4"	15-1/2"
10"	3"	8-1/2"	9"	2-1/2"	13-1/2"	18-1/4"
12"	3"	9-15/16"	9"	2-1/2"	15"	19-3/4"
14"	4"	10-15/16"	11"	3"	16-1/4"	20-3/4"
16"	4"	12-3/8"	11"	3"	17-3/4"	22-1/4"
18"	6"	13-7/8"	13-1/2"	3-1/2"	19-1/2"	24"
20"	6"	15-3/8"	13-1/2"	3-1/2"	21"	25-1/2"
24"	6"	17-15/16"	13-1/2"	4"	23-3/4"	28-1/4"
30"	6"	21-5/16"	13-1/2"	4"	27"	31-1/2"
32"	6"	22-1/2"	13-1/2"	4"	28-1/4"	32-3/4"
36"	6"	24-1/2"	13-1/2"	4"	30-1/4"	34-3/4"

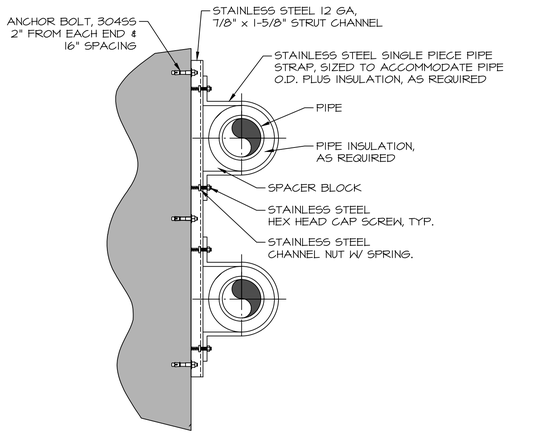

STAINLESS STEEL STRUT CHANNEL PIPE SUPPORT

N.T.S

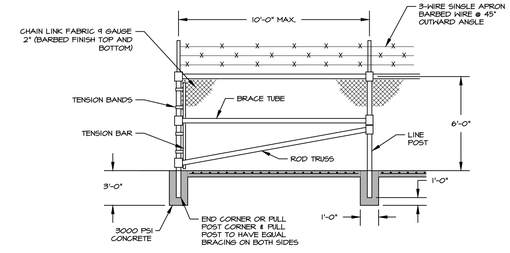

CHAIN LINK FENCE

N.T.S.

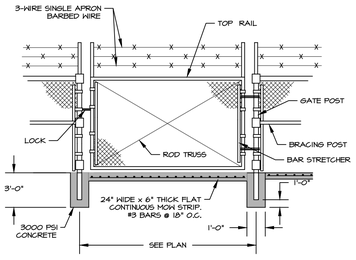

SINGLE GATE

N.T.S.

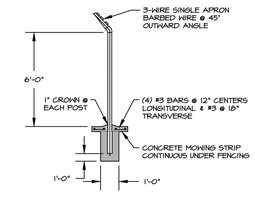

FENCE POST

N.T.S.

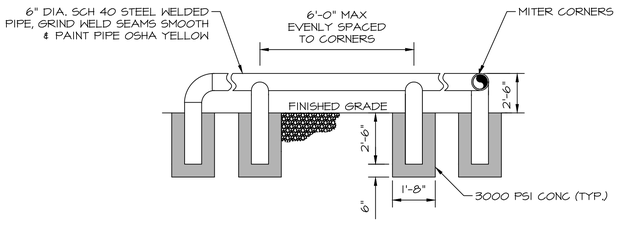

GUARD RAIL DETAIL

N.T.S

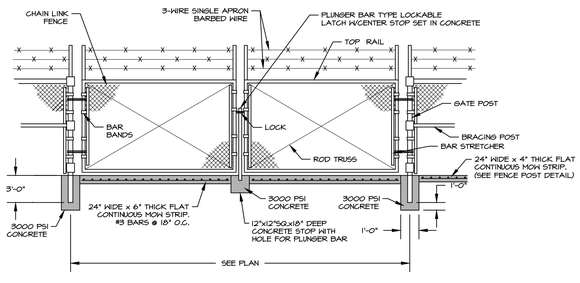

DOUBLE SWING GATE

N.T.S.



TYPICAL PERMANENT WARNING SIGN

N.T.S.

SIGN DETAILS:

PROPERTY SIGNS SHALL BE 12"X14", 40 MIL ALUMINUM SIGN. SIGN SHALL BE PLASTIC LAMINATED W/ LAMINATE CONTAINING UV BLOCKING AGENTS. CORNERS SHALL BE ROUNDED. FONT SHALL BE ARIAL BLACK CENTERED ON SIGN. ATTACH SIGNS ON OUTSIDE OF GATES AND AT 200 FOOT INTERVALS ALONG OUTSIDE OF FENCES FACING OUT. ENTRANCE GATES SHALL HAVE PROPERTY ADDRESS. COORDINATE ADDRESS WITH OWNER



WALL ENGINEERING
223 N. WASHINGTON, DURANT, OK 74701
OKLAHOMA CA #5413 EXP. JUNE 30, 2023

SUBMITTAL / REVISIONS:

DATE	BY	
06/22	TL	ISSUED FOR BIDDING

SHAWNEE MUNICIPAL AUTHORITY
SOUTHSIDE IMPROVEMENTS
SHAWNEE, OKLAHOMA

MISCELLANEOUS DETAILS

PROJECT NO.
SHN-20-01
DATE
06/22
DRAWN BY:
JR
CHECKED BY:
TA
REVIEWED BY:
DBW
SCALE:
AS NOTED

BAR IS ONE INCH ON ORIGINAL DRAWING
0" 1"
IF NOT ONE INCH ON THIS SHEET, ADJUST SCALES ACCORDINGLY

SHEET
DT-6

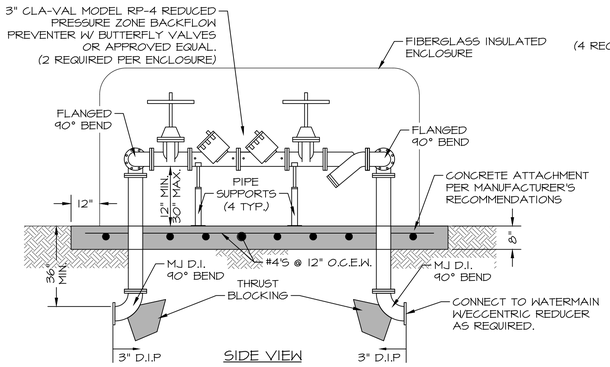

SIDE VIEW

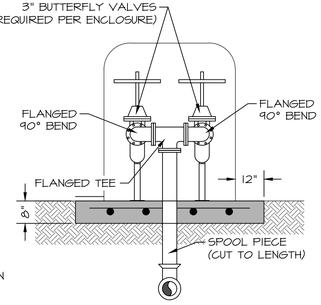

END VIEW

MINIMUM RESTRAINED LENGTH (FT) FOR A TEST PRESSURE OF 100 PSIG

NOMINAL PIPE SIZE	90 DEGREE	WYE OR 45 DEGREE	22-1/2 DEGREE	11-1/4 DEGREE	TEE BRANCH	TERMINAL PLUG
6	23	18	18	18	39	59
8	30	18	18	18	51	6'-4"
10	36	18	18	18	61	92
12	41	18	18	18	71	107
20	62	26	18	18	110	164
24	72	30	18	18	128	192
30	85	35	18	18	152	228
36	96	40	18	18	175	262
48	118	48	23	18	214	322
54	131	54	26	18	348	344

NOTES:

1. RESTRAIN ALL DUCTILE IRON FITTINGS.
2. TABULATED VALUES ARE FOR 100 PSIG TEST PRESSURE. FOR VALUES AT PRESSURES OTHER THAN 100 PSID, MULTIPLY TABLE VALUES BY THE RATIO OF ACTUAL TEST PRESSURE TO 100 PSIG. TEST PRESSURES FOR EACH SERVICE ARE DEFINED IN THE PIPING SCHEDULE.
3. WHERE LISTED VALUES, OR CALCULATED VALUES (SEE ABOVE), ARE LESS THAN ON STANDARD FULL PIPE SEGMENT (18 FEET), RESTRAIN THE FITTING ONLY.
4. RESTRAINT LENGTHS APPLY TO PIPE RUNS ON EACH SIDE OF A CHANGE IN DIRECTION.
5. WHERE THE PIPING LAYOUT HAS RESTRAINED JOINT LENGTHS FOR TWO OR MORE FITTINGS TO OVERLAP, THRUST RESTRAIN ALL PIPING BETWEEN THE OTHER FITTINGS. ASSUME 1/2 OF THE RESTRAINED PIPE LENGTH BETWEEN THE TWO FITTINGS RESTRAINS EACH OF THE FITTINGS AND ADD ADDITIONAL RESTRAINED JOINT LENGTH TO THE OUTER LEGS OF THE OUTER FITTINGS TO EQUAL THE TOTAL REQUIRED FOR ALL FITTINGS.
6. THRUST RESTRAINT TABLE REFERS TO NEW PIPING.

BACKFLOW PREVENTER

N.T.S

NOTES:

1. INSTALL INSIDE INSULATED FIBERGLASS ENCLOSURE, SUBMITTAL REQUIRED.

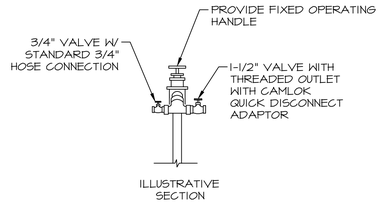

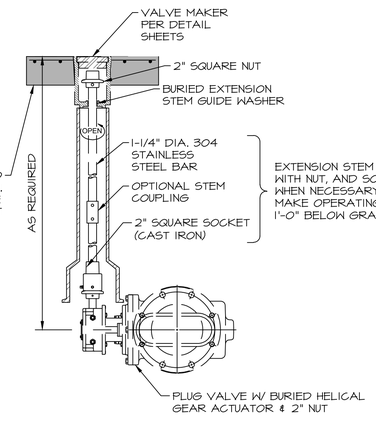

BURIED MANUAL PLUG VALVE

N.T.S

BURIED DUCTILE IRON PIPE THRUST RESTRAINT TABLE

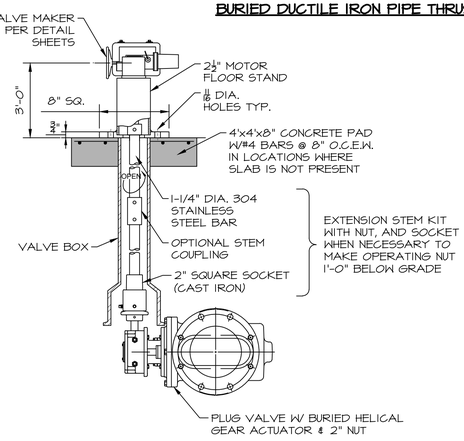

BURIED ELECTRICALLY ACTUATED PLUG VALVE

N.T.S

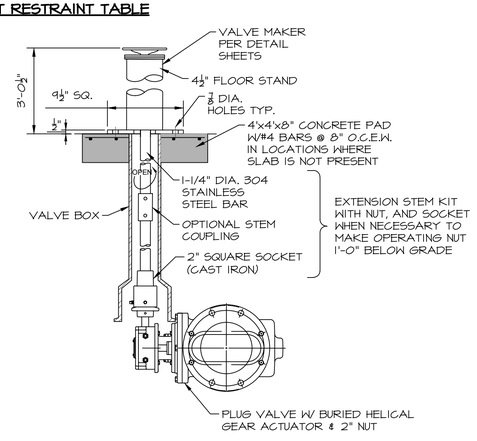

BURIED VALVE WITH PEDESTAL MOUNTED OPERATOR

N.T.S

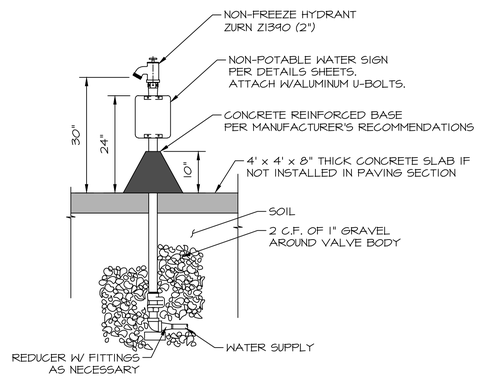

HOSE BIB-NON POTABLE

N.T.S

NOTES:

1. ALL HYDRANTS SHALL BE PROVIDED W/ HOSE RACK.
2. SIGN IS ROTATED FOR CLARITY, ORIENTATION SHALL BE VISIBLE FROM FRONT OF HYDRANT.
3. CONTRACTOR SHALL PROVIDE A 3/4" AND 1-1/2" THREADED OUTLET WITH CAMLOK QUICK DISCONNECT ADAPTERS AND VALVE ON EACH YARD HYDRANT IN ADDITION TO THE 2" HYDRANT VALVE. YARD HYDRANT SHALL BE ZURN Z1390 SERIED OR APPROVED EQUAL.
4. YARD HYDRANTS LOCATED NEXT TO STRUCTURES SHALL BE SECURELY MOUNTED TO THE STRUCTURES WITH STAINLESS STEEL FASTENERS.
5. YARD HYDRANTS SHALL BE PROVIDED WITH WHEEL TYPE HANDLE.
6. PROVIDE CASING GUARD AROUND YARD HYDRANT ABOVE GRADE SURFACE.
7. HYDRANT SHALL BE DESIGNATED WITH A "NON-POTABLE WATER" SIGN. SEE DETAIL SHEETS.

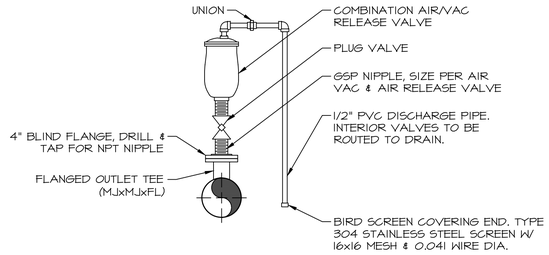

AIR VACUUM & RELEASE VALVE (3" & SMALLER)

N.T.S

NOTES:

1. VALVE SIZE SHALL BE AS INDICATED ON THE DRAWINGS.
2. SERVICE TAP & PLUG VALVE SHALL MATCH VALVE INLET SIZE.
3. FIELD ROUTE DISCHARGE PIPE TO DRAIN/DAYLIGHT.



WALL ENGINEERING
223 N. WASHINGTON, DURANT, OK 74701
OKLAHOMA CA #5413 EXP. JUNE 30, 2023

SUBMITTAL / REVISIONS:

DATE	BY	SUBMITTAL / REVISION
06/22	TL	ISSUED FOR BIDDING

SHAWNEE MUNICIPAL AUTHORITY
SOUTHSIDE IMPROVEMENTS
SHAWNEE, OKLAHOMA

MISCELLANEOUS DETAILS

PROJECT NO.
SHN-20-01
DATE
06/22
DRAWN BY:
JR
CHECKED BY:
TA
REVIEWED BY:
DBW
SCALE:
AS NOTED

BAR IS ONE INCH ON ORIGINAL DRAWING
0" 1"
IF NOT ONE INCH ON THIS SHEET, ADJUST SCALES ACCORDINGLY

SHEET
DT-7

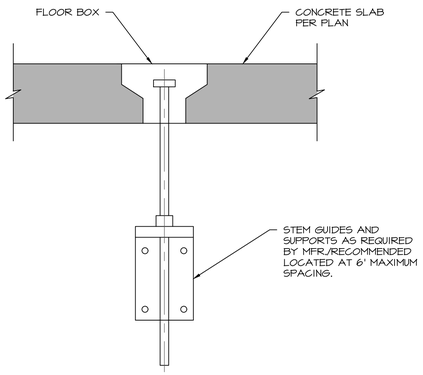

VALVE NUT INSTALLATION
N.T.S.

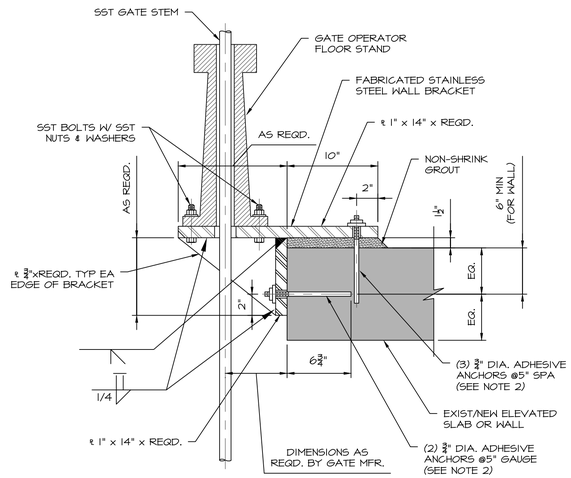

NOTES
1. VERTICAL ANCHORS ARE STAGGERED FROM HORIZONTAL ANCHORS.
2. VERIFY FLOOR STAND REQUIREMENTS, GATE STEM LOCATION, AND SLAB THICKNESS FRIOR TO FABRICATION, ADJUST AS REQUIRED.

GATE FLOOR STAND
N.T.S.

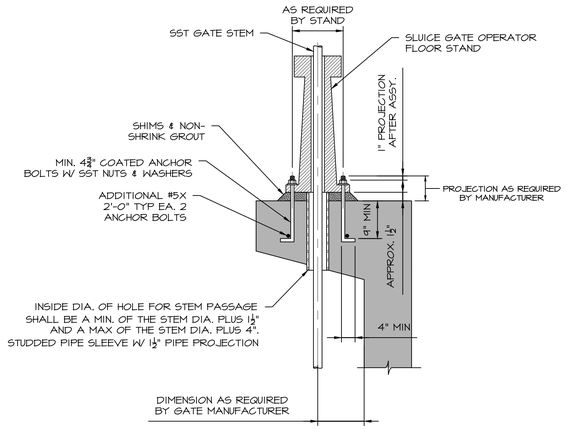

NOTES
1. FLOOR STAND IS REPRESENTATIVE ONLY.

GATE FLOOR STAND INSTALLATION
N.T.S.

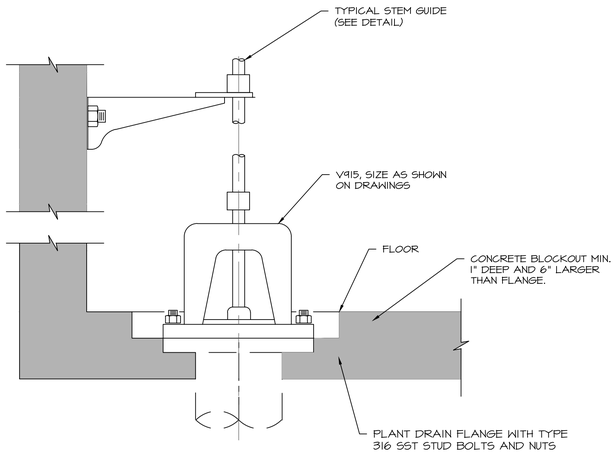

MUD VALVE
N.T.S.

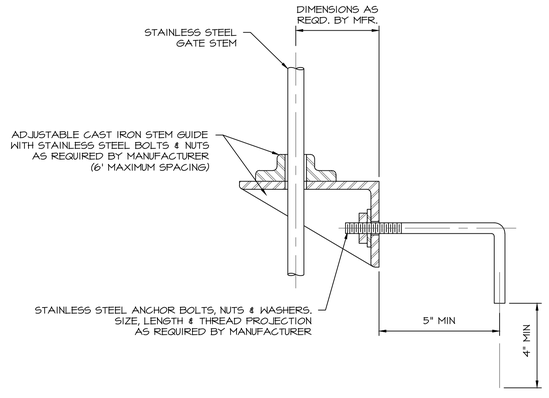

STEM GUIDE (GATES/MUD VALVES)
N.T.S.



WALL ENGINEERING
223 N. WASHINGTON, DURANT, OK 74701
OKLAHOMA CA #5413 EXP. JUNE 30, 2023

SUBMITTAL / REVISIONS:

	DATE	BY	SUBMITTAL / REVISION
	06/22	TL	ISSUED FOR BIDDING

SHAWNEE MUNICIPAL AUTHORITY
SOUTHSIDE IMPROVEMENTS
SHAWNEE, OKLAHOMA

MISCELLANEOUS DETAILS

PROJECT NO.
SHN-20-01
DATE
06/22
DRAWN BY:
JR
CHECKED BY:
TA
REVIEWED BY:
DBW
SCALE:
AS NOTED

BAR IS ONE INCH ON ORIGINAL DRAWING
0" 1"
IF NOT ONE INCH ON THIS SHEET, ADJUST SCALES ACCORDINGLY

SHEET
DT-8

POWER, LIGHTING & SYSTEM LEGEND

- Ⓐ OR ⊢Ⓐ⊣ — LIGHT FIXTURE, CEILING MOUNTED. REFER TO LIGHT FIXTURE SCHEDULE
- ⊢Ⓐ — LIGHT FIXTURE, WALL MOUNTED. REFER TO LIGHT FIXTURE SCHEDULE
- EXIT LIGHT FIXTURE, CEILING MOUNTED OR AS NOTED. DARKENED AREAS INDICATE FACES, ARROWS INDICATE DIRECTION OF EGRESS
- EMERGENCY EXIT LIGHT FIXTURE, CEILING MOUNTED OR AS NOTED. MOUNT 7'–6" AFF OR AS NOTED.
- S — LIGHT SWITCH, MOUNTED. 4'–0" AFF. "2" INDICATES 2 POLE, "3" INDICATES 3–WAY, "4" INDICATES 4–WAY, "P" INDICATES PILOT LIGHT, "M" INDICATES MOTOR HP RATED WITH OVERLOADS. SEE ABBREVIATIONS FOR OTHER SYMBOLS
- 20 AMP DUPLEX RECEPTACLE MOUNTED HORIZONTALLY 6" ABOVE COUNTER TOP UNLESS OTHERWISE SHOWN
- 20 AMP DUPLEX RECEPTACLE MTD. 18" A.F.F., WITH #12 GROUND WIRE, GFCI INDICATES GROUND FAULT CIRCUIT INTERRUPTER, WP INDICATES WEATHERPROOF WHILE IN USE ENCLOSURE AND COVER
- SINGLE RECEPTACLE, RATINGS AS NOTED
- OR — DISCONNECT SWITCH, NON–FUSED, SIZE AS NOTED
- F OR — DISCONNECT SWITCH, FUSED, SIZE AS NOTED
- C OR — CIRCUIT BREAKER, TRIP RATING AS NOTED. BOX INDICATES CIRCUIT BREAKER IS TO BE INSTALLED IN AN ENCLOSURE.
- OR — COMBINATION DISCONNECT AND MOTOR CONTROLLER, SIZE AS NOTED. FUSED TYPE SHOWN.
- PUSHBUTTON STATION
- ELECTRICAL PANEL, SURFACE MOUNTED, 5'–6" TO TOP OF ENCLOSURE
- ELECTRICAL PANEL, RECESSED MOUNTED, 5'–6" TO TOP OF ENCLOSURE
- EQUIPMENT CABINET SIZE AS NOTED, RECESSED MOUNTED, 5'–6" TO TOP OF ENCLOSURE
- EQUIPMENT CABINET SIZE AS NOTED, SURFACE MOUNTED, 5'–6" TO TOP OF ENCLOSURE

CONTROL SYSTEM LEGEND

- DIGITAL INPUT OR OUTPUT, SIGNAL ID AS NOTED
- ANALOG INPUT OR OUTPUT, SIGNAL ID AS NOTED
- M — FLOW METER
- FS OR — FLOAT SWITCH, QUANTITY AS SHOWN OR NOTED.
- LT — LEVEL TRANSMITTER
- PUMP OR BLOWER
- M — VALVE, MOTOR SYMBOL INDICATES MOTOR OPERATOR

- L–1 — HOME RUN TO PANEL, RECEPTACLES AND EQUIPMENT SHALL HAVE GREEN GROUND WIRE. LETTER(S) INDICATE NAME OF PANEL, NUMBER(S) INDICATE CIRCUIT NUMBERS
- J — JUNCTION BOX 42 CUBIC INCH MINIMUM CAPACITY
- S — DOOR SWITCH MOUNTED IN DOOR JAMB
- DOOR BUTTON WEATHER PROOF, 50" A.F.F.
- B — DOOR BUZZER MTD 7'–0" A.F.F.
- H OR MH (H1, MH1) — HANDHOLE OR MANHOLE, IDENTIFIER SHOWN, REFER TO HANDHOLE OR MANHOLE SCHEDULE FOR SIZE
- CIRCUIT BREAKER, TRIP RATING SHOWN, 3–POLE UNLESS NOTED
- * — FUSE, CURRENT LIMITING, RATING AS SHOWN
- TRANSFORMER, RATINGS AS SHOWN
- M, 10 HP — ELECTRIC MOTOR, HORSEPOWER SHOWN
- * — MOTOR CONTROLLER, SIZE AS SHOWN OR REQUIRED. FVNR UNLESS NOTED
- HOA — HAND–OFF–AUTO SELECTOR SWITCH MOUNTED IN ENCLOSURE
- VARIABLE FREQUENCY DRIVE
- 4–4" — DUCT BANK, IDENTIFIER SHOWN. REFER TO DUCT BANK SCHEDULE FOR SIZE AND CONFIGURATION.
- 3/4" x 10' COPPER CLAD GROUND ROD
- SPD — SURGE PROTECTIVE DEVICE
- G, * kW — GENERATOR
- OR — AUTOMATIC TRANSFER SWITCH, CIRCUIT BREAKER SYMBOLS INDICATE SERVICE ENTRANCE RATED ATS
- WEATHERHEAD
- LP — ASSET AND ASSET IDENTIFIER. USED TO SHOW – THE LOCATION OF AN ASSET
- XXX — ASSET IDENTIFIER. REFER TO ASSET SCHEDULE
- XXX — CIRCUIT IDENTIFIER. REFER TO CIRCUIT SCHEDULE

CIRCUIT IDENTIFICATION

2 (3–#8 PH, 1–#8 N, 1–#10 EGC) 3/4" GRS

- CONDUIT TYPE (SEE ABBREVIATIONS) REFER TO SPECIFICATIONS IF "C" OR NOT SHOWN
- CONDUIT SIZE
- WIRES OR CABLES, QUANTITY – SIZE SHOWN SEE ABBREVIATIONS FOR TYPE DEFINITIONS
- NUMBER OF SETS

(2–#16 STP) 1"C

- 2 #16 AWG SHIELDED TWISTED PAIR CABLES IN 1" CONDUIT

GENERAL NOTES:

1. SOME SYMBOLS OR ABBREVIATIONS MAY APPEAR ON THIS SHEET AND NOT BE UTILIZED ON THE PROJECT.

ABBREVIATIONS

A	AMP
ACU	AIR CONDITIONING UNIT
AFF	ABOVE FINISHED FLOOR OR GRADE
AHU	AIR HANDLER UNIT
AIC	AMPS INTERRUPTING CAPACITY
AM	AMP–METER
ANN	ANNUNCIATOR
AP	AERIAL PRIMARY
AS	AERIAL SECONDARY
ATS	AUTOMATIC TRANSFER SWITCH
AUX	AUXILIARY
BFI	BLOWN FUSE INDICATOR
BKR	BREAKER
C	CONDUIT
CGRS	PVC COATED GALVANIZED RIGID STEEL
CKT	CIRCUIT
CONT	CONTINUOUS
CP	CONTROL PANEL
CPT	CONTROL POWER TRANSFORMER
CR	CONTROL RELAY
CS	CORD SET
CU	COEFFICIENT OF UTILIZATION
CU	CONDENSING UNIT
DEB	DIRECT EARTH BURIED
EC	EMPTY OR EMBEDDED CONDUIT
EF	EXHAUST FAN
EG	EQUIPMENT GROUND
EGC	EQUIPMENT GROUNDING CONDUCTOR
EL	ELEVATION
EMT	ELECTRICAL METALLIC TUBING
ETM	ELASPED TIME METER
FA	FIRE ALARM
FAP	FIRE ALARM PANEL
FC	FAN COIL
FLA	FULL LOAD AMPS
FLR	FLOOR
FOC	FIBER OPTIC CABLE
FS	FLOAT SWITCH
FT	FEET
FVNR	FULL VOLTAGE NON–REVERSING MOTOR CONTROLLER
FVR	FULL VOLTAGE REVERSING MOTOR CONTROLLER
G	GROUND
GEC	GROUNDING ELECTRODE CONDUCTOR
GFCI	GROUND FAULT CIRCUIT INTERRUPTER
GND	GROUND
GRS	GALVANIZED RIGID STEEL
HOA	HAND–OFF–AUTO
HP	HORSEPOWER OR HEAT PUMP
HR	HOUR
JB	JUNCTION BOX
kVA	KILOVOLT–AMPERE
kVAR	KILOVOLT–AMPERE, REACTIVE
kW	KILOWATT
L	LINE (PHASE)
LA	LIGHTNING ARRESTOR
LSI	LONG–TIME, SHORT–TIME, INSTANTANEOUS TRIP UNIT
LV	LOW VOLTAGE
MC	MOTOR CONTROLLER
MCB	MAIN CIRCUIT BREAKER
MCC	MOTOR CONTROL CENTER
MCP	MOTOR CIRCUIT PROTECTOR
MFR	MANUFACTURER
MIN	MINIMUM
MLO	MAIN LUGS ONLY
MM	MAINTENANCE MODE (ENERGY–REDUCING MAINTENANCE SWITCHING WITH LOCAL STATUS) MOUNTED
MTS	MANUAL TRANSFER SWITCH
N	NEUTRAL
NFDS	NON–FUSED DISCONNECT SWITCH
NTS	NOT TO SCALE
OCEW	ON CENTER EACH WAY
OH	OVERHEAD
OHE	OVERHEAD ELECTRICAL LINE
OL	OVERLOAD
OPGP	OFFICE PRINCIPAL GROUND POINT
P	POLE
PB	PUSH BUTTON
PDSC	POWER DISTRIBUTION SERVICES CABINET
PEC	PHOTO ELECTRIC CELL
PF	POWER FACTOR
PFR	POWER FAIL RELAY
PH	PHASE
PL	PILOT LIGHT
PMR	PHASE MONITOR RELAY
PNL	PANEL
PTT	PUSH–TO–TEST
PVC	SCHEDULE 40 POLYVINYL CONDUIT
RECPT	RECEPTACLE
RM	ROOM
RVAT	REDUCED VOLTAGE AUTO–TRANSFORMER MOTOR CONTROLLER
S	SECOND
SA	SURGE ARRESTER
SDBC	SOFT DRAWN BARE COPPER
SE	SERVICE ENTRANCE
SN	SOLID NEUTRAL
SPD	SURGE PROTECTIVE DEVICE
SS	STAINLESS STEEL
STA	STATION
STP	SHIELDED TWISTED PAIR
SW	SWITCH
TC	TIME CLOCK
TEL	TELEPHONE
TD	TIME DELAY
TDD	TIME DELAY ON DE–ENERGIZATION
TDE	TIME DELAY ON ENERGIZATION
TYP	TYPICAL
UG	UNDER GROUND
UGE	UNDER GROUND ELECTRICAL LINE
UH	UNIT HEATER
UP	UNDERGROUND PRIMARY
US	UNDERGROUND SECONDARY
VA	VOLT–AMP
VFD	VARIABLE FREQUENCY DRIVE
VM	VOLT–METER
W	WATT OR WIRE
WH	WEATHER HEAD
WM	WATT METER
WP	WEATHERPROOF
XMFR	TRANSFORMER

CONTROL SCHEMATIC LEGEND

- WIRING WITHIN PANEL
- WIRING TO FIELD DEVICE
- PUSHBUTTON SWITCH NORMALLY OPEN, NORMALLY CLOSED
- SELECTOR SWITCH, NUMBER OF POSITIONS AND CONTACTS AS SHOWN
- RELAY CONTACT NORMALLY OPEN, NORMALLY CLOSED
- TIME DELAY CONTACT CLOSE ON ENERGIZATION, OPEN ON ENERGIZATION
- TIME DELAY CONTACT OPEN ON DE–ENERGIZATION, CLOSE ON DE–ENERGIZATION
- LEVEL SWITCH
- PRESSURE SWITCH
- LIMIT SWITCH CONTACT NORMALLY OPEN, NORMALLY CLOSED
- LIMIT SWITCH CONTACT HELD OPEN, HELD CLOSED
- TEMPERATURE SWITCH NORMALLY OPEN, NORMALLY CLOSED
- RELAY COIL "TR" INDICATES "TIMING RELAY"
- PILOT LIGHT "A" INDICATES "AMBER LENS" "G" INDICATES "GREEN LENS" "R" INDICATES "RED LENS"
- SOLENOID
- ETM — ELAPSED TIME METER
- TERMINAL BLOCK
- ELECTRICAL CONNECTION
- FUSE, AMPERE RATING AS SHOWN OR REQUIRED "BFI" INDICATES "BLOWN FUSE INDICATOR" TYPE
- GROUND CONNECTION TO ENCLOSURE GROUND BAR

GENERAL

- 1 / – — SHEET REFERENCE. SEQUENCE NUMBER SHOWN ON TOP, SHEET ID SHOWN ON BOTTOM. IF SHEET ID IS "–" OR BLANK, THE REFERENCE IS TO THE SHEET ON WHICH THE REFERENCE IS DRAWN.
- FURNISH + INSTALL NEW
- EXISTING
- DEMOLISH
- AREA/PACKAGE BOUNDARY

WALL ENGINEERING
PO BOX 1457, DURANT, OK 74702
OKLAHOMA CA #5413 EXP. JUNE 30, 2021

SUBMITTAL / REVISIONS:

DATE	BY	SUBMITTAL / REVISION

SHAWNEE MUNICIPAL AUTHORITY
SOUTHSIDE WWTP IMPROVEMENTS
SHAWNEE, OKLAHOMA

ELECTRICAL LEGEND AND ABBREVIATIONS

PROJECT NO. SHN-20-01
DATE 09/20
DRAWN BY: CD
CHECKED BY: BB
REVIEWED BY: BB
SCALE: AS SHOWN

BAR IS ONE INCH ON ORIGINAL DRAWING (0" – 1")
IF NOT ONE INCH ON THIS SHEET, ADJUST SCALES ACCORDINGLY

SHEET E1

REGISTERED PROFESSIONAL ENGINEER — BRUCE W. BROWN — 20995 — 4-20-21 — OKLAHOMA

BROWN ENGINEERS 501-448-0100

P:\PRODUCTION\PROJECTS\WALL ENGINEERING (WE)\WE-048 SHAWNEE SOUTHSIDE WWTP\DWG\E01_LEGEND.DWG
5/4/2021 8:18 AM

GENERAL NOTES:

1. THE ASSET SCHEDULE INCLUDES MAJOR EQUIPMENT AND SYSTEMS TO BE INSTALLED, REMOVED OR ALTERED BY THIS PROJECT. ASSETS ARE INDICATED ON THESE DRAWINGS BY THE ASSET ID. REFER TO THE LEGEND AND ABBREVIATIONS FOR THE ASSET SYMBOL. NOT ALL EQUIPMENT REQUIRED BY THIS PROJECT IS SHOWN ON THE ASSET SCHEDULE.
2. THE CIRCUIT SCHEDULE DEFINES THE CABLE, WIRE AND CONDUIT REQUIRED FOR POWER AND CONTROL CIRCUITS. CIRCUITS ARE INDICATED ON THESE DRAWINGS BY THE CIRCUIT ID. REFER TO THE LEGEND AND ABBREVIATIONS FOR THE CIRCUIT SYMBOL. THE CONDUIT SIZE SHOWN IN THE "CIRCUIT" COLUMN IS FOR ABOVE-GRADE CONDUIT. CONDUIT INSTALLED UNDERGROUND SHALL BE 1" MINIMUM SIZE.
3. THE PANEL SCHEDULES INDICATE THE REQUIRED CHARACTERISTICS OF SWITCHBOARDS, MOTOR CONTROL CENTERS, DISTRIBUTION PANELS, POWER PANELS, AND LIGHTING PANELS. REFER TO THE ASSET SCHEDULE AND THE CIRCUIT SCHEDULE FOR ADDITIONAL INFORMATION.
4. THE POWER SYSTEM ONE-LINE DIAGRAM(S) SHOW MAJOR ASSETS ONLY. REFER TO THE PANEL SCHEDULES FOR ADDITIONAL REQUIREMENTS.
5. THE CONTROL SYSTEM ONE-LINE DIAGRAM(S) INDICATE THE GENERAL ARRANGEMENT OF ASSETS AND THE CONTROL AND SIGNAL CIRCUITS REQUIRED. REFER TO THE ASSET SCHEDULE, CIRCUIT SCHEDULE, SIGNAL SCHEDULE, AND WIRING DIAGRAMS FOR ADDITIONAL REQUIREMENTS.
6. THE CONTRACTOR SHALL FURNISH AND INSTALL ALL REQUIRED EQUIPMENT AND LABOR TO PROVIDE NEW AND ALTER EXISTING ELECTRICAL SERVICE(S) AS INDICATED. THE CONTRACTOR SHALL PAY ALL COSTS IMPOSED BY THE ELECTRIC UTILITY FOR EACH NEW ELECTRICAL SERVICE. THE CONTRACTOR SHALL COORDINATE ALL REQUIREMENTS AND THE LOCATION OF EACH NEW ELECTRICAL SERVICE WITH THE ELECTRIC UTILITY AND THE OWNER.
7. THE CONTRACTOR SHALL PROVIDE AND INSTALL POWER AND CONTROL CIRCUITS IN CONDUIT TO ALL ELECTRICAL EQUIPMENT INSTALLED OR ALTERED DURING THIS PROJECT AT NO ADDITIONAL COST TO THE OWNER.
8. THE CONTRACTOR SHALL TEST ALL INSTALLED AND ALTERED EQUIPMENT, DEMONSTRATE PROPER OPERATION OF ALL EQUIPMENT TO THE OWNER, AND TRAIN THE OWNER IN OPERATION AND MAINTENANCE PROCEDURES.

MANUFACTURER-DESIGNED EQUIPMENT SYSTEM NOTES:

1. THIS PROJECT INCLUDES THE CONSTRUCTION OF MANUFACTURER-DESIGNED EQUIPMENT SYSTEMS.
2. POWER, SIGNAL AND CONTROL CIRCUITS ARE SHOWN ON THESE DRAWINGS BASED ON SIMILAR MANUFACTURER-DESIGNED EQUIPMENT SYSTEMS.
3. THE FINAL POWER, SIGNAL AND CONTROL CIRCUIT REQUIREMENTS SHALL BE DETERMINED BY THE APPROVED MANUFACTURER.
4. DRAWINGS, SPECIFICATIONS, INSTALLATION MANUALS, AND OTHER REQUIRED DOCUMENTATION SHALL BE PROVIDED BY THE APPROVED MANUFACTURERS AND MAY INCLUDE ADDITIONAL AND/OR ALTERED REQUIREMENTS THAN SHOWN ON THESE DRAWINGS.
5. THE CONTRACTOR SHALL COORDINATE WITH THOSE APPROVED SUBMITTAL DRAWINGS AND PROVIDE ALL REQUIRED LABOR AND MATERIALS NECESSARY FOR A COMPLETE AND ACCEPTED SYSTEM AT NO ADDITIONAL COST TO THE OWNER.

HAZARDOUS LOCATION NOTES:

1. THIS PROJECT INCLUDES THE INSTALLATION OF ELECTRICAL SYSTEMS IN LOCATIONS DEFINED BY THE NATIONAL FIRE PROTECTION AGENCY (NFPA) AS HAZARDOUS (CLASSIFIED) LOCATIONS. WASTEWATER COLLECTION SYSTEMS AND WASTEWATER TREATMENT PROCESSES ARE FIRE AND EXPLOSION HAZARDS DUE TO THE POSSIBLE IGNITION OF FLAMMABLE GASSES AND FLOATING FLAMMABLE LIQUIDS.
2. WIRING MATERIALS AND METHODS IN HAZARDOUS (CLASSIFIED) LOCATIONS SHALL MEET THE REQUIREMENTS OF THE NATIONAL ELECTRICAL CODE (NEC), ARTICLE 500, HAZARDOUS (CLASSIFIED) LOCATIONS. INSTALLATION SHALL BE DONE BY PERSONS TRAINED AND EXPERIENCED IN HAZARDOUS (CLASSIFIED) LOCATION WORK.
3. CONDUIT SEAL FITTINGS SHALL BE FURNISHED AND INSTALLED AT BOUNDARIES OF HAZARDOUS (CLASSIFIED) LOCATIONS. BOUNDARIES OF HAZARDOUS (CLASSIFIED) LOCATIONS ARE BETWEEN CLASS I AND UNCLASSIFIED LOCATIONS, CLASS I AND CLASS II LOCATIONS, CLASS II AND UNCLASSIFIED LOCATIONS. CONDUIT SEAL FITTINGS SHALL BE LOCATED AS REQUIRED BY THE NATIONAL ELECTRICAL CODE.
4. RIGID CONDUIT IN HAZARDOUS (CLASSIFIED) LOCATIONS SHALL BE RIGID METAL CONDUIT (RMC) OR CONCRETE-ENCASED PVC. FLEXIBLE CONDUIT IN HAZARDOUS (CLASSIFIED) LOCATIONS SHALL BE RATED FOR THE HAZARD CLASSIFICATION IN WHICH IT IS INSTALLED.
5. WASTEWATER LIFT STATION WET WELLS ARE CLASS I, DIVISION I HAZARDOUS LOCATIONS.
6. WASTEWATER LIFT STATION METER VAULTS ARE CLASS I, DIVISION II HAZARDOUS LOCATIONS.

WALL ENGINEERING
PO BOX 1457, DURANT, OK 74702
OKLAHOMA CA #5413 EXP. JUNE 30, 2021

SUBMITTAL / REVISIONS:

DATE	BY	SUBMITTAL / REVISION

SHAWNEE MUNICIPAL AUTHORITY
SOUTHSIDE WWTP IMPROVEMENTS
SHAWNEE, OKLAHOMA

ELECTRICAL SYSTEM NOTES

PROJECT NO. SHN-20-01
DATE 09/20
DRAWN BY: CD
CHECKED BY: BB
REVIEWED BY: BB
SCALE: AS SHOWN

BAR IS ONE INCH ON ORIGINAL DRAWING
0" 1"
IF NOT ONE INCH ON THIS SHEET, ADJUST SCALES ACCORDINGLY

SHEET
E2

REGISTERED PROFESSIONAL ENGINEER
BRUCE W. BROWN
20995
OKLAHOMA
8-20-2021

BROWN ENGINEERS
501-448-0100

P:\PRODUCTION\PROJECTS\WALL ENGINEERING (WE)\WE-048 SHAWNEE SOUTHSIDE WWTP\DWG\E02_ELECTRICAL SYSTEM NOTES.DWG
3/2/2021 10:04 AM

Asset Schedule		
Id	Name	Note
ATS	Automatic Transfer Switch	–
CS	Control System	–
CS–FMC	Control System, Fiber Media Converter	1
CS–M	Control System, Monitor	–
CS–S	Control System, Server	–
CS–UPS	Control System, Uninterruptible Power Supply	–
EB	Electrical Building	–
EB–CP	Electrical Building, Control Panel	–
EB–DSS	Electrical Building, Ductless Split System	–
EB–DSS–CU	Electrical Building, Ductless Split System, Condensing Unit	–
EB–DSS–DS	Electrical Building, Ductless Split System, Disconnect Switch	–
EB–DSS–FC	Electrical Building, Ductless Split System, Fan Coil	–
EB–FPP	Electrical Building, Fiber Patch Panel	–
EB–LP	Electrical Building, Lighting Panel	–
EB–LP–SPD	Electrical Building, Lighting Panel, Surge Protective Device	–
EB–LP–T	Electrical Building, Lighting Panel, Transformer	–
EB–NER	Electrical Building, Network Equipment Rack	–
EB–PLC	Electrical Building, Programmable Logic Controller	–
EB–PLC–NS	Electrical Building, Programmable Logic Controller, Network Switch	–
EB–PLC–UPS	Electrical Building, Programmable Logic Controller, Uninterruptible Power Supply	–
EB–PP1	Electrical Building, Power Panel 1	–
EB–PP1–SPD	Electrical Building, Power Panel 1, Surge Protective Device	–
EB–PP2	Electrical Building, Power Panel 2	–
EB–PP2–SPD	Electrical Building, Power Panel 2, Surge Protective Device	–
EB–SB	Electrical Building, Switchboard	–
EB–SB–SPD	Electrical Building, Switchboard, Surge Protective Device	–
ES	Electrical Service	–
ES–CTE	Electrical Service, Current Transformer Enclosure	–
ES–T	Electrical Service, Transformer	–
ES–UM	Electrical Service, Utility Meter	–
FEBLS	Flow Equalization Basin Lift Station	–
FEBLS–CP	Flow Equalization Basin Lift Station, Control Panel	–
FEBLS–EER	Flow Equalization Basin Lift Station, Electrical Equipment Rack	–
FEBLS–EH	Flow Equalization Basin Lift Station, Electric Hoist	–
FEBLS–EH–DS	Flow Equalization Basin Lift Station, Electric Hoist, Disconnect Switch	–
FEBLS–FM	Flow Equalization Basin Lift Station, Flow Meter	–
FEBLS–FMS	Flow Equalization Basin Lift Station, Flow Metering Structure	–
FEBLS–P1	Flow Equalization Basin Lift Station, Pump 1	–
FEBLS–P1–DS	Flow Equalization Basin Lift Station, Pump 1, Disconnect Switch	–
FEBLS–P1–ILR	Flow Equalization Basin Lift Station, Pump 1, Input Line Reactor	–
FEBLS–P1–MC	Flow Equalization Basin Lift Station, Pump 1, Motor Controller	–
FEBLS–P1–TB	Flow Equalization Basin Lift Station, Pump 1, Terminal Box	–
FEBLS–P2	Flow Equalization Basin Lift Station, Pump 2	–
FEBLS–P2–DS	Flow Equalization Basin Lift Station, Pump 2, Disconnect Switch	–
FEBLS–P2–ILR	Flow Equalization Basin Lift Station, Pump 2, Input Line Reactor	–

Note:
1 Refer to Control System Power and Signal Diagram for quantity.
2 Refer to Television System Power and Signal Diagram for quantity.
3 With 20' Round Tapered Aluminum Pole.

Asset Schedule, Continued		
Id	Name	Note
FEBLS–P2–MC	Flow Equalization Basin Lift Station, Pump 2, Motor Controller	–
FEBLS–P2–TB	Flow Equalization Basin Lift Station, Pump 2, Terminal Box	–
FEBLS–PLC	Flow Equalization Basin Lift Station, Programmable Logic Controller	–
FEBLS–PLC–UPS	Flow Equalization Basin Lift Station, Programmable Logic Controller, Uninterruptible Power Supply	–
G	Generator	–
G–BC	Generator, Battery Charger	–
G–BH	Generator, Block Heater	–
GS	Grit System	–
GS–EER	Grit System, Electrical Equipment Rack	–
GS1	Grit System 1	–
GS1–CP	Grit System 1, Control Panel	–
GS2	Grit System 2	–
GS2–CP	Grit System 2, Control Panel	–
H1	Hand Hole 1	–
H2	Hand Hole 2	–
H3	Hand Hole 3	–
H4	Hand Hole 4	–
H5	Hand Hole 5	–
H6	Hand Hole 6	–
HT	Heat Trace	–
HW	Headworks	–
HW–CP	Headworks, Control Panel	–
HW–EER	Headworks, Electrical Equipment Rack	–
HW–IV	Headworks, Influent Valve	–
HW–IV–DS	Headworks, Influent Valve, Disconnect Switch	–
HW–PLC	Headworks, Programmable Logic Controller	–
HW–PLC–UPS	Headworks, Programmable Logic Controller, Uninterruptible Power Supply	–
ILS	Influent Lift Station	–
ILS–CP	Influent Lift Station, Control Panel	–
ILS–EER	Influent Lift Station, Electrical Equipment Rack	–
ILS–EH	Influent Lift Station, Electric Hoist	–
ILS–EH–DS	Influent Lift Station, Electric Hoist, Disconnect Switch	–
ILS–FMS	Influent Lift Station, Flow Metering Structure	–
ILS–PLC	Influent Lift Station, Programmable Logic Controller	–
ILS–PLC–UPS	Influent Lift Station, Programmable Logic Controller, Uninterruptible Power Supply	–
LF	Light Fixture	–
LF–E–A	Light Fixture, Area Light	3
LF–E–WP	Light Fixture, Exterior, Wall Pack	–
LF–H	Light Fixture, Hazardous Location	–
LF–I–S	Light Fixture, Interior, Strip	–
MBS	Manual Bar Screen	–
MBS–EER	Manual Bar Screen, Electrical Equipment Rack	–
MBS–IV	Manual Bar Screen, Influent Valve	–
MBS–IV–DS	Manual Bar Screen, Influent Valve, Disconnect Switch	–
MBS1	Mechanical Bar Screen 1	–

Note:
1 Refer to Control System Power and Signal Diagram for quantity.
2 Refer to Television System Power and Signal Diagram for quantity.
3 With 20' Round Tapered Aluminum Pole.

Asset Schedule, Continued		
Id	Name	Note
MBS1–CP	Mechanical Bar Screen 1, Control Panel	–
MBS1–IV	Mechanical Bar Screen 1, Influent Valve	–
MBS1–IV–DS	Mechanical Bar Screen 1, Influent Valve, Disconnect Switch	–
MBS2	Mechanical Bar Screen 2	–
MBS2–CP	Mechanical Bar Screen 2, Control Panel	–
MBS2–IV	Mechanical Bar Screen 2, Influent Valve	–
MBS2–IV–DS	Mechanical Bar Screen 2, Influent Valve, Disconnect Switch	–
NWTP	Northside Wastewater Treatment Plant	–
NWTP–FM	Northside Wastewater Treatment Plant, Flow Meter	–
NWTP–P1	Northside Wastewater Treatment Plant, Pump 1	–
NWTP–P1–DS	Northside Wastewater Treatment Plant, Pump 1, Disconnect Switch	–
NWTP–P1–ILR	Northside Wastewater Treatment Plant, Pump 1, Input Line Reactor	–
NWTP–P1–MC	Northside Wastewater Treatment Plant, Pump 1, Motor Controller	–
NWTP–P1–TB	Northside Wastewater Treatment Plant, Pump 1, Terminal Box	–
NWTP–P2	Northside Wastewater Treatment Plant, Pump 2	–
NWTP–P2–DS	Northside Wastewater Treatment Plant, Pump 2, Disconnect Switch	–
NWTP–P2–ILR	Northside Wastewater Treatment Plant, Pump 2, Input Line Reactor	–
NWTP–P2–MC	Northside Wastewater Treatment Plant, Pump 2, Motor Controller	–
NWTP–P2–TB	Northside Wastewater Treatment Plant, Pump 2, Terminal Box	–
PFEB	Primary Flow Equalization Basin	–
PFEB–FM	Primary Flow Equalization Basin, Flow Meter	–
PFEB–LT	Primary Flow Equalization Basin, Level Transmitter	–
PFEB–P1	Primary Flow Equalization Basin, Pump 1	–
PFEB–P1–DS	Primary Flow Equalization Basin, Pump 1, Disconnect Switch	–
PFEB–P1–ILR	Primary Flow Equalization Basin, Pump 1, Input Line Reactor	–
PFEB–P1–MC	Primary Flow Equalization Basin, Pump 1, Motor Controller	–
PFEB–P1–TB	Primary Flow Equalization Basin, Pump 1, Terminal Box	–
PFEB–P2	Primary Flow Equalization Basin, Pump 2	–
PFEB–P2–DS	Primary Flow Equalization Basin, Pump 2, Disconnect Switch	–
PFEB–P2–ILR	Primary Flow Equalization Basin, Pump 2, Input Line Reactor	–
PFEB–P2–MC	Primary Flow Equalization Basin, Pump 2, Motor Controller	–
PFEB–P2–TB	Primary Flow Equalization Basin, Pump 2, Terminal Box	–
R	Receptacle	–
SFEB	Secondary Flow Equalization Basin	–
TV	Television System	–
TV–C	Television System, Camera	2
TV–CI	Television System, Camera Interface	2
TV–FMC	Television System, Fiber Media Converter	2
TV–M	Television System, Monitor	–
TV–NS	Television System, Network Switch	–
TV–S	Television System, Server	–
TV–UPS	Television System, Uninterruptible Power Supply	–
TV–UPS–TB	Television System, Uninterruptible Power Supply, Terminal Box	–

Note:
1 Refer to Control System Power and Signal Diagram for quantity.
2 Refer to Television System Power and Signal Diagram for quantity.
3 With 20' Round Tapered Aluminum Pole.

WALL ENGINEERING
PO BOX 1457, DURANT, OK 74702
OKLAHOMA CA #5413 EXP. JUNE 30, 2021

SUBMITTAL / REVISIONS:

DATE	BY	SUBMITTAL / REVISION

SHAWNEE MUNICIPAL AUTHORITY
SOUTHSIDE WWTP IMPROVEMENTS
SHAWNEE, OKLAHOMA

ELECTRICAL ASSET SCHEDULE

PROJECT NO.
SHN-20-01
DATE
09/20
DRAWN BY:
CD
CHECKED BY:
BB
REVIEWED BY:
BB
SCALE:
AS SHOWN

BAR IS ONE INCH ON ORIGINAL DRAWING
0" 1"
IF NOT ONE INCH ON THIS SHEET, ADJUST SCALES ACCORDINGLY

SHEET
E3

REGISTERED PROFESSIONAL ENGINEER
BRUCE W. BROWN
20995
4-20-2021
OKLAHOMA

BROWN ENGINEERS
501-448-0100

P:\PRODUCTION\PROJECTS\WALL ENGINEERING (WE)\WE-048 SHAWNEE SOUTHSIDE WWTP\DWG\E03_ASSET SCHEDULE.DWG
4/16/2021 11:07 AM

P:\PRODUCTION\PROJECTS\WALL ENGINEERING (WE)\WE-048 SHAWNEE SOUTHSIDE WWTP\DWG\E04_CONTROL SYSTEM ONE-LINE DIAGRAM I.DWG
3/25/2021 11:36 AM

WALL ENGINEERING
PO BOX 1457, DURANT, OK 74702
OKLAHOMA CA #5413 EXP. JUNE 30, 2021

SUBMITTAL / REVISIONS:

DATE	BY	SUBMITTAL / REVISION

SHAWNEE MUNICIPAL AUTHORITY
SOUTHSIDE WWTP IMPROVEMENTS
SHAWNEE, OKLAHOMA

CONTROL SYSTEM ONE-LINE DIAGRAM I

PROJECT NO.	~~SHN-20-01~~
DATE	09/20
DRAWN BY:	CD
CHECKED BY:	BB
REVIEWED BY:	BB
SCALE:	AS SHOWN

BAR IS ONE INCH ON ORIGINAL DRAWING
0" 1"
IF NOT ONE INCH ON THIS SHEET, ADJUST SCALES ACCORDINGLY

REGISTERED PROFESSIONAL ENGINEER
BRUCE W. BROWN
20995
OKLAHOMA
4-20-2021

BROWN ENGINEERS
501-448-0100

SHEET
E4

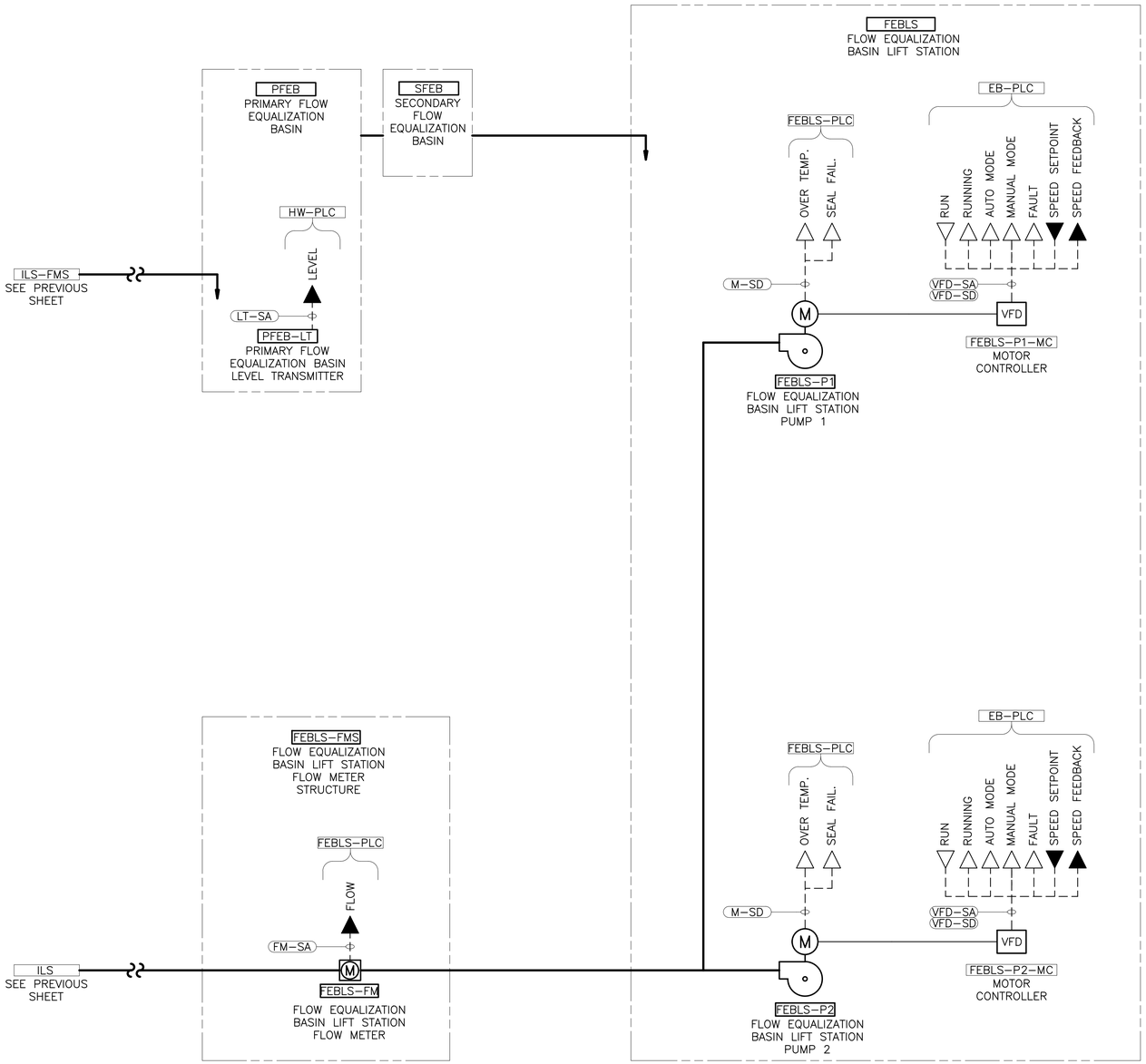

P:\PRODUCTION\PROJECTS\WALL ENGINEERING (WE)\WE-048 SHAWNEE SOUTHSIDE WWTP\DWG\E05_CONTROL SYSTEM ONE-LINE DIAGRAM II.DWG
3/25/2021 10:12 AM

WALL ENGINEERING
PO BOX 1457, DURANT, OK 74702
OKLAHOMA CA #5413 EXP. JUNE 30, 2021

SUBMITTAL / REVISIONS:

DATE	BY	SUBMITTAL / REVISION

SHAWNEE MUNICIPAL AUTHORITY
SOUTHSIDE WWTP IMPROVEMENTS
SHAWNEE, OKLAHOMA

CONTROL SYSTEM ONE-LINE DIAGRAM II

PROJECT NO. SHN-20-01
DATE 09/20
DRAWN BY: CD
CHECKED BY: BB
REVIEWED BY: BB
SCALE: AS SHOWN

BAR IS ONE INCH ON ORIGINAL DRAWING
0" 1"
IF NOT ONE INCH ON THIS SHEET, ADJUST SCALES ACCORDINGLY

REGISTERED PROFESSIONAL ENGINEER
BRUCE W. BROWN
20995
11-20-20
OKLAHOMA

BROWN ENGINEERS
501-448-0100

SHEET
E5

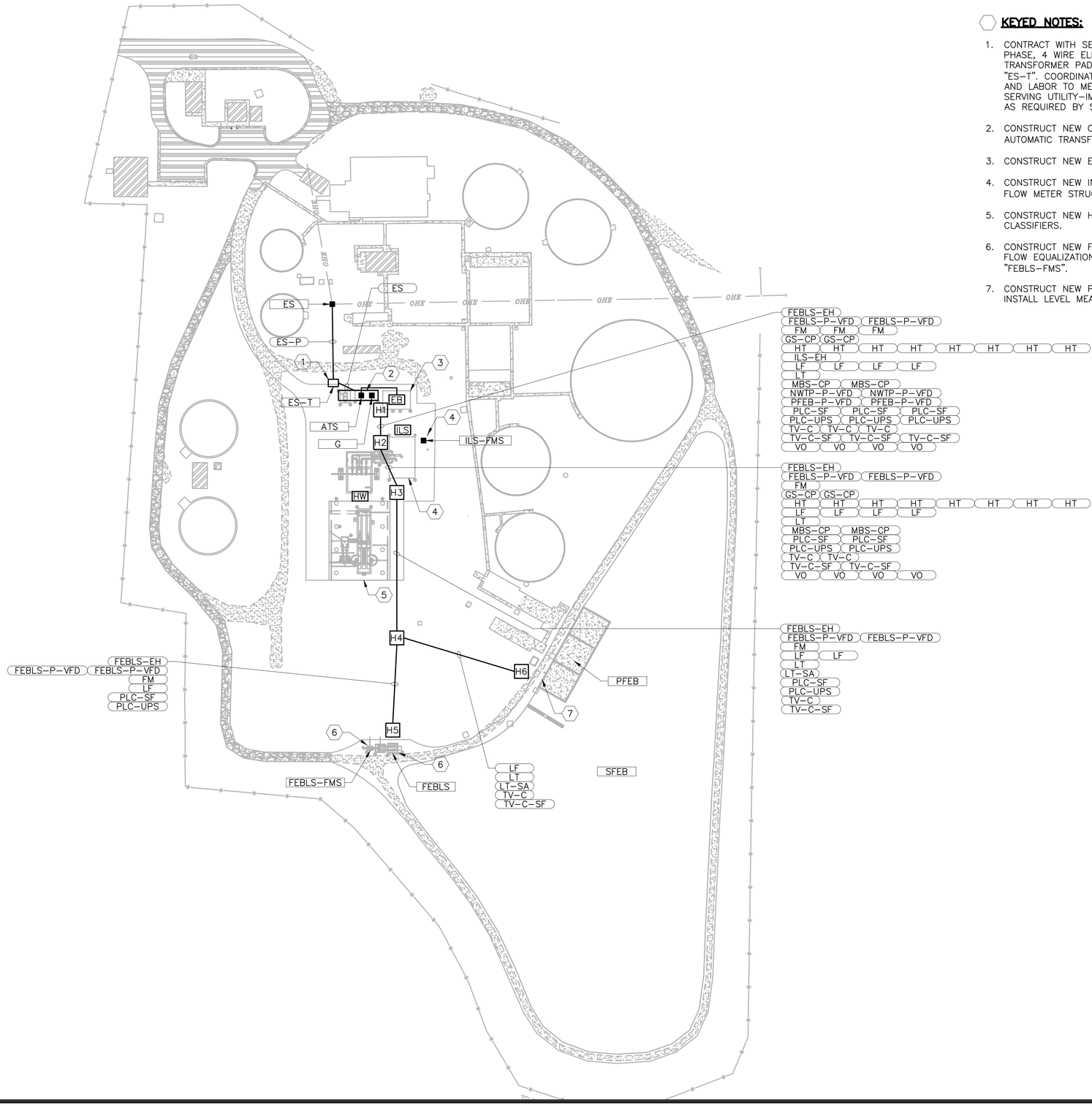

KEYED NOTES:

1. CONTRACT WITH SERVING UTILITY TO INSTALL NEW 480Y/277 VOLT, 3 PHASE, 4 WIRE ELECTRICAL SERVICE. CONSTRUCT NEW CONCRETE TRANSFORMER PAD FOR SERVING UTILITY–FURNISHED TRANSFORMER "ES–T". COORDINATE WITH SERVING UTILITY AND PROVIDE ALL MATERIALS AND LABOR TO MEET ALL SERVING UTILITY REQUIREMENTS. PAY ALL SERVING UTILITY–IMPOSED FEES. CONSTRUCT NEW PRIMARY FEEDER DUCTS AS REQUIRED BY SERVING UTILITY.
2. CONSTRUCT NEW CONCRETE PAD AND INSTALL NEW GENERATOR "G" AND AUTOMATIC TRANSFER SWITCH "ATS".
3. CONSTRUCT NEW ELECTRICAL BUILDING "EB".
4. CONSTRUCT NEW INFLUENT LIFT STATION "ILS" AND INFLUENT LIFT STATION FLOW METER STRUCTURE "ILS–FMS."
5. CONSTRUCT NEW HEADWORKS "HW". INCLUDING BAR SCREENS AND GRIT CLASSIFIERS.
6. CONSTRUCT NEW FLOW EQUALIZATION BASIN LIFT STATION "FEBLS" AND FLOW EQUALIZATION BASIN LIFT STATION FLOW METER STRUCTURE "FEBLS–FMS".
7. CONSTRUCT NEW PRIMARY FLOW EQUALIZATION BASIN IMPROVEMENTS. INSTALL LEVEL MEASUREMENT SYSTEM.

WALL ENGINEERING
PO BOX 1457, DURANT, OK 74702
OKLAHOMA CA #5413 EXP. JUNE 30, 2021

SUBMITTAL / REVISIONS:

DATE	BY	SUBMITTAL / REVISION

SHAWNEE MUNICIPAL AUTHORITY
SOUTHSIDE WWTP IMPROVEMENTS
SHAWNEE, OKLAHOMA

ELECTRICAL SITE PLAN

PROJECT NO. SHN-20-01
DATE 09/20
DRAWN BY: CD
CHECKED BY: BB
REVIEWED BY: BB
SCALE: AS SHOWN

BAR IS ONE INCH ON ORIGINAL DRAWING
0" 1"
IF NOT ONE INCH ON THIS SHEET, ADJUST SCALES ACCORDINGLY

SHEET
E6

REGISTERED PROFESSIONAL ENGINEER
BRUCE W. BROWN
20995
OKLAHOMA
9-20-2021

BROWN ENGINEERS
501-448-0100

P:\PRODUCTION\PROJECTS\WALL ENGINEERING (WE)\WE-048 SHAWNEE SOUTHSIDE WWTP\DWG\E06_SITE PLAN.DWG
5/4/2021 8:23 AM

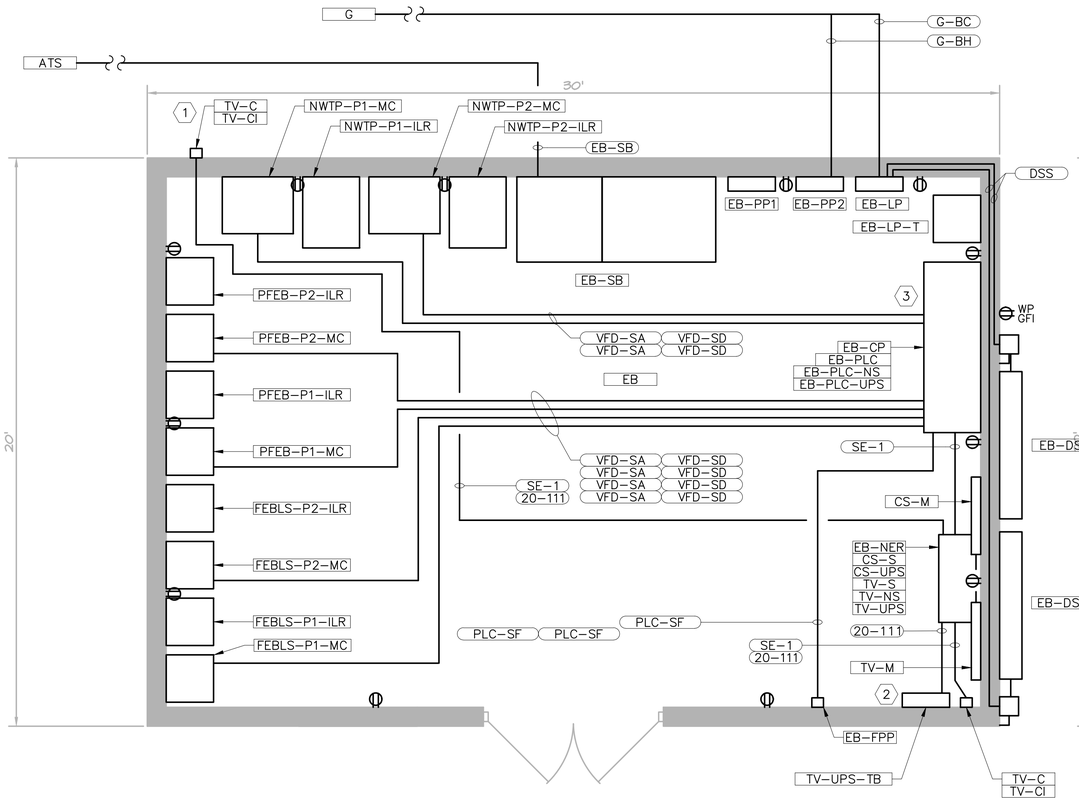

1 **POWER AND CONTROL PLAN**
SCALE: 3/8" = 1'-0"

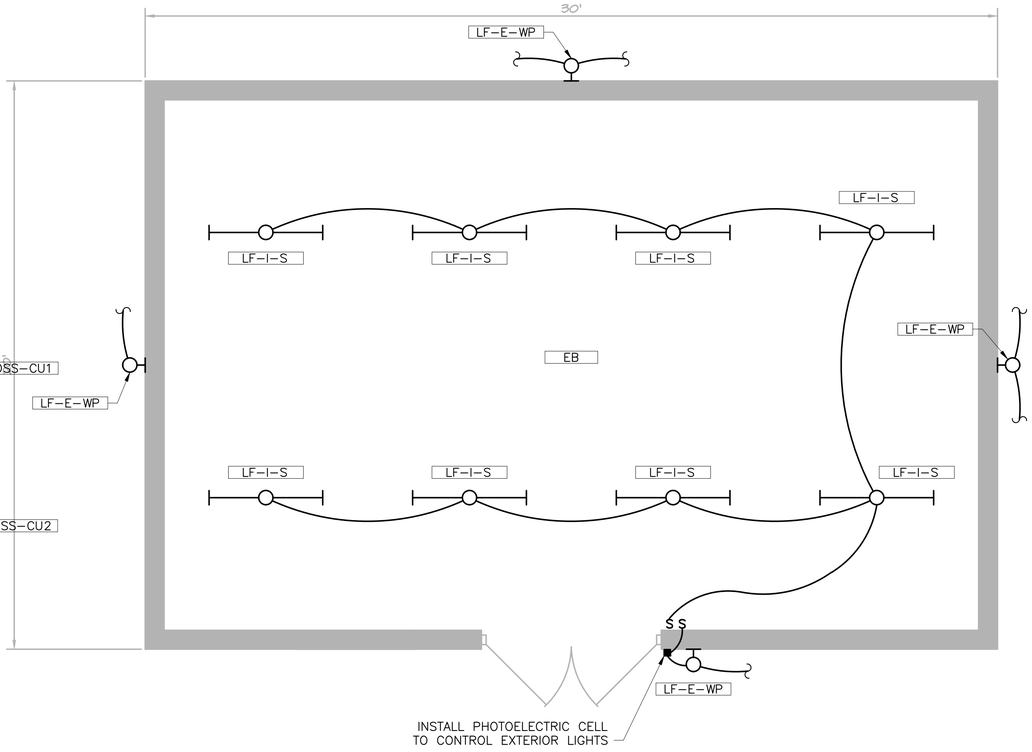

2 **LIGHTING PLAN**
SCALE: 3/8" = 1'-0"

KEYED NOTES:

1. MOUNT CAMERA TO PROVIDE VIEW OF ENTRY GATE.
2. TELEVISION FIBER MEDIA CONVERTERS "TV-FMC" LOCATED IN TERMINAL BOX "TV-UPS-TB".
3. CONTROL SYSTEM FIBER MEDIA CONVERTERS "CS-FMC" LOCATED IN CONTROL PANEL "EB-CP"

WALL ENGINEERING
PO BOX 1457, DURANT, OK 74702
OKLAHOMA CA #5413 EXP. JUNE 30, 2021

SUBMITTAL / REVISIONS:

DATE	BY	SUBMITTAL / REVISION

SHAWNEE MUNICIPAL AUTHORITY
SOUTHSIDE WWTP IMPROVEMENTS
SHAWNEE, OKLAHOMA

ELECTRICAL BUILDING POWER, CONTROL AND LIGHTING PLANS

PROJECT NO.
SHN-20-01
DATE
09/20
DRAWN BY:
CD
CHECKED BY:
BB
REVIEWED BY:
BB
SCALE:
AS SHOWN

BAR IS ONE INCH ON ORIGINAL DRAWING
0" 1"
IF NOT ONE INCH ON THIS SHEET, ADJUST SCALES ACCORDINGLY

SHEET
E7

REGISTERED PROFESSIONAL ENGINEER
BRUCE W. BROWN
20995
9-20-21
OKLAHOMA

BROWN ENGINEERS
501-448-0100

P:\PRODUCTION\PROJECTS\WALL ENGINEERING (WE)\WE-048 SHAWNEE SOUTHSIDE WWTP\DWG\E07_ELECTICAL BUILDING PLAN.DWG
5/6/2021 12:11 PM

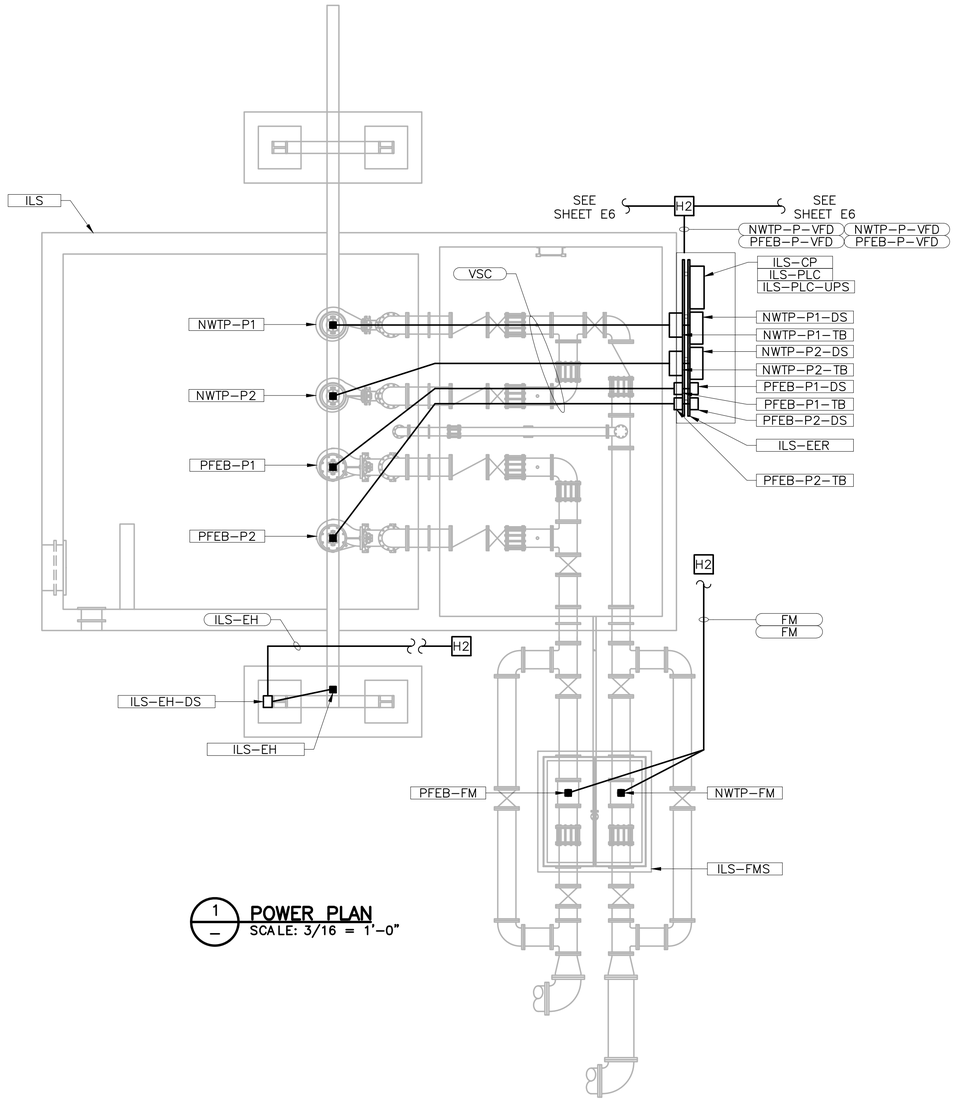

1 POWER PLAN
SCALE: 3/16 = 1'-0"

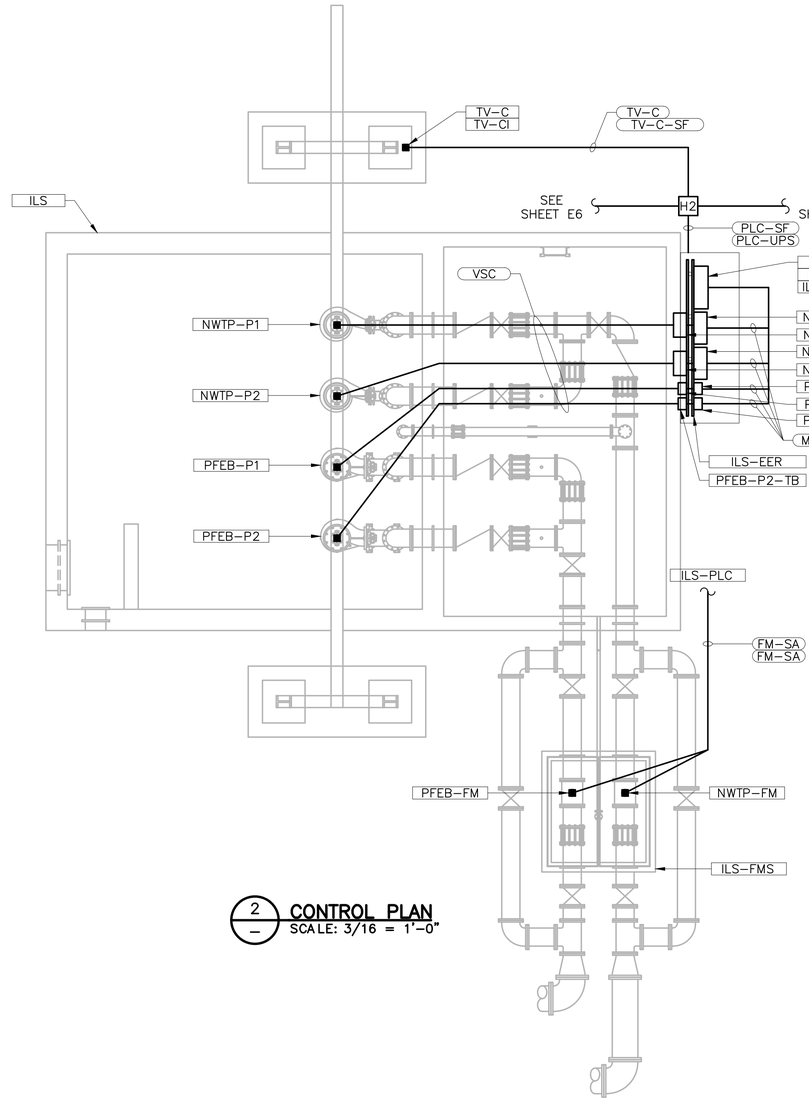

2 CONTROL PLAN
SCALE: 3/16 = 1'-0"

WALL ENGINEERING
PO BOX 1457, DURANT, OK 74702
OKLAHOMA CA #5413 EXP. JUNE 30, 2021

SUBMITTAL / REVISIONS:

DATE	BY	SUBMITTAL / REVISION

SHAWNEE MUNICIPAL AUTHORITY
SOUTHSIDE WWTP IMPROVEMENTS
SHAWNEE, OKLAHOMA

INFLUENT LIFT STATION "ILS" POWER, CONTROL AND LIGHTING PLAN

PROJECT NO.
SHN-20-01
DATE
09/20
DRAWN BY:
CD
CHECKED BY:
BB
REVIEWED BY:
BB
SCALE:
AS SHOWN

BAR IS ONE INCH ON ORIGINAL DRAWING
0" 1"
IF NOT ONE INCH ON THIS SHEET, ADJUST SCALES ACCORDINGLY

REGISTERED PROFESSIONAL ENGINEER
BRUCE W. BROWN
20995
8-27-2021
OKLAHOMA

BROWN ENGINEERS
501-448-0100

SHEET
E8

P:\PRODUCTION\PROJECTS\WALL ENGINEERING (WE)\WE-048 SHAWNEE SOUTHSIDE WWTP\DWG\E08_INFLUENT LS PLANS.DWG
4/16/2021 11:34 AM

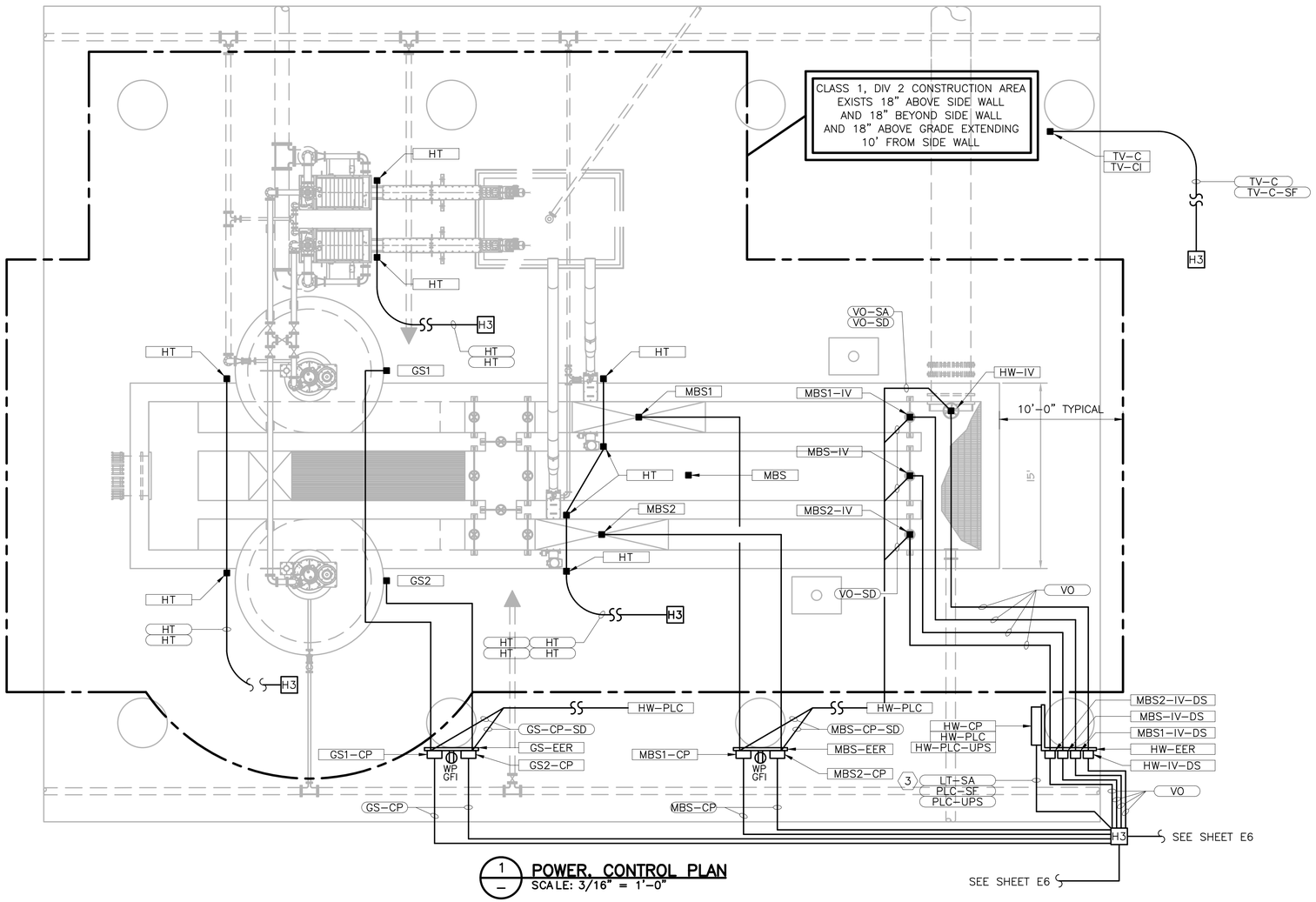

1 — **POWER, CONTROL PLAN**
SCALE: 3/16" = 1'-0"

NOTES:

1. FURNISH AND INSTALL ALL INTERCONNECTING CONDUIT AND WIRE AS REQUIRED BY APPROVED SUBMITTAL DOCUMENTS AND MANUFACTURER RECOMMENDATIONS. MAKE ALL FINAL CONNECTIONS FOR A COMPLETE AND OPERATIONAL SYSTEM (INCLUDING ALL SOLENOIDS, NON-POTABLE CONTROL, EMERGENCY STOP SWITCHES, HEAT TRACE, ETC).
2. HEAT TRACE AND INSULATE EXPOSED WATER LINE.
3. LEVEL SIGNAL FROM "PFEB-LT" TERMINATES AT "HW-PLC".

WALL ENGINEERING
PO BOX 1457, DURANT, OK 74702
OKLAHOMA CA #5413 EXP. JUNE 30, 2021

SUBMITTAL / REVISIONS:

DATE	BY	SUBMITTAL / REVISION

SHAWNEE MUNICIPAL AUTHORITY
SOUTHSIDE WWTP IMPROVEMENTS
SHAWNEE, OKLAHOMA

**HEADWORKS "HW"
POWER, CONTROL PLAN**

PROJECT NO.	SHN-20-01
DATE	09/20
DRAWN BY:	CD
CHECKED BY:	BB
REVIEWED BY:	BB
SCALE:	AS SHOWN

BAR IS ONE INCH ON ORIGINAL DRAWING
0" 1"
IF NOT ONE INCH ON THIS SHEET, ADJUST SCALES ACCORDINGLY

REGISTERED PROFESSIONAL ENGINEER
BRUCE W. BROWN
20995
OKLAHOMA
5-4-21

BROWN ENGINEERS
501-448-0100

SHEET
E9

P:\PRODUCTION\PROJECTS\WALL ENGINEERING (WE)\WE-048 SHAWNEE SOUTHSIDE WWTP\DWG\E09_HEADWORKS POWER AND CONTROL PLAN.DWG
5/4/2021 8:33 AM

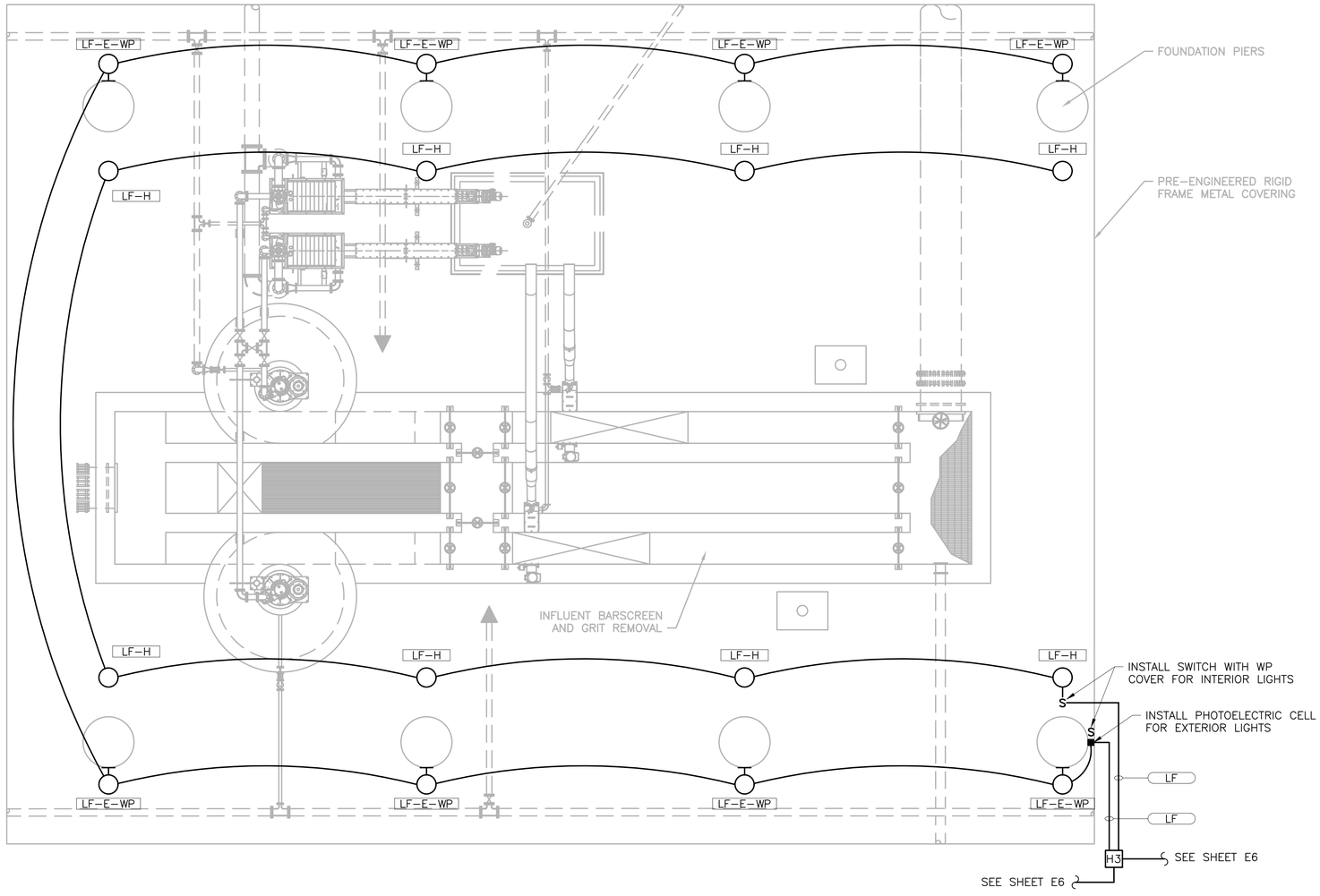

1 LIGHTING PLAN
SCALE: 3/16" = 1'-0"

P:\PRODUCTION\PROJECTS\WALL ENGINEERING (WE)\WE-048 SHAWNEE SOUTHSIDE WWTP\DWG\E10_HEADWORKS LIGHTING PLAN.DWG
5/4/2021 8:39 AM

WALL ENGINEERING
PO BOX 1457, DURANT, OK 74702
OKLAHOMA CA #5413 EXP. JUNE 30, 2021

SUBMITTAL / REVISIONS:

DATE	BY	SUBMITTAL / REVISION

SHAWNEE MUNICIPAL AUTHORITY
SOUTHSIDE WWTP IMPROVEMENTS
SHAWNEE, OKLAHOMA

HEADWORKS "HW"
LIGHTING PLAN

PROJECT NO.
SHN-20-01
DATE
09/20
DRAWN BY:
CD
CHECKED BY:
BB
REVIEWED BY:
BB
SCALE:
AS SHOWN

BAR IS ONE INCH ON ORIGINAL DRAWING
0" 1"
IF NOT ONE INCH ON THIS SHEET, ADJUST SCALES ACCORDINGLY

SHEET
E10

REGISTERED PROFESSIONAL ENGINEER
BRUCE W. BROWN
20995
5-20-2021
OKLAHOMA

BROWN ENGINEERS
501-448-0100

KEYED NOTES:

1. INSTALL SNAP SWITCH IN WEATHERPROOF ENCLOSURE TO CONTROL AREA LIGHT. WHEN SWITCH IS ON, THE AREA LIGHT SHALL BE CONTROLLED BY AND INTEGRATED PHOTOELECTRIC CELL (GEC).

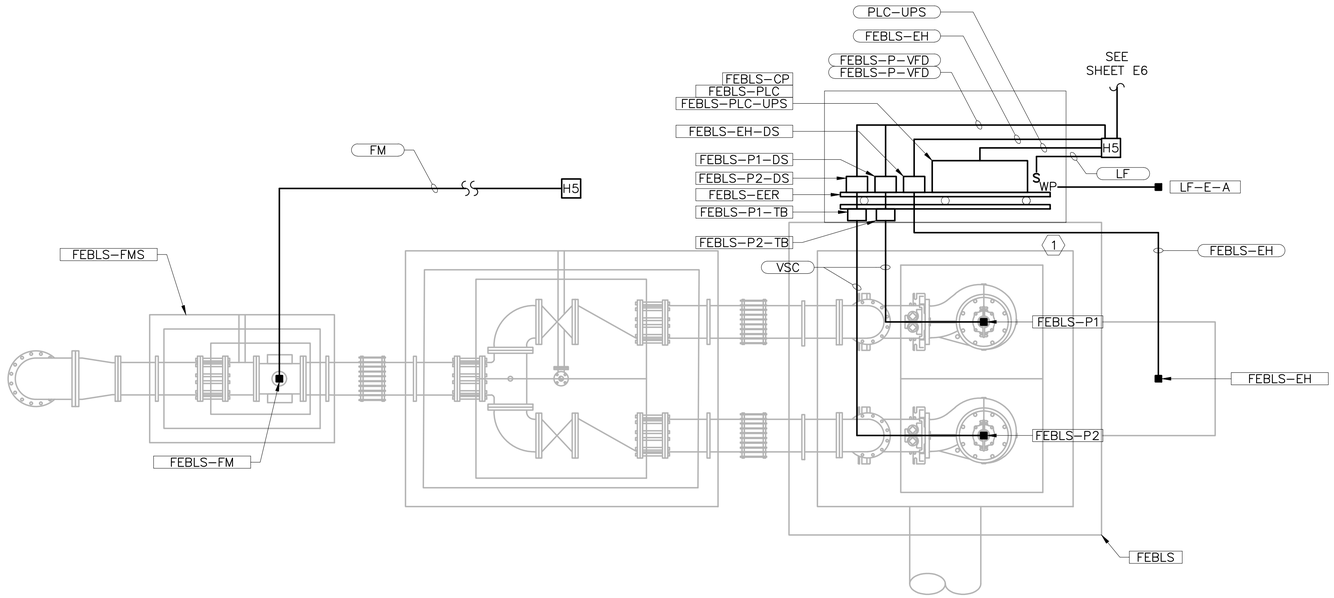

1 — POWER AND LIGHTING PLAN
SCALE: 3/8 = 1'-0"

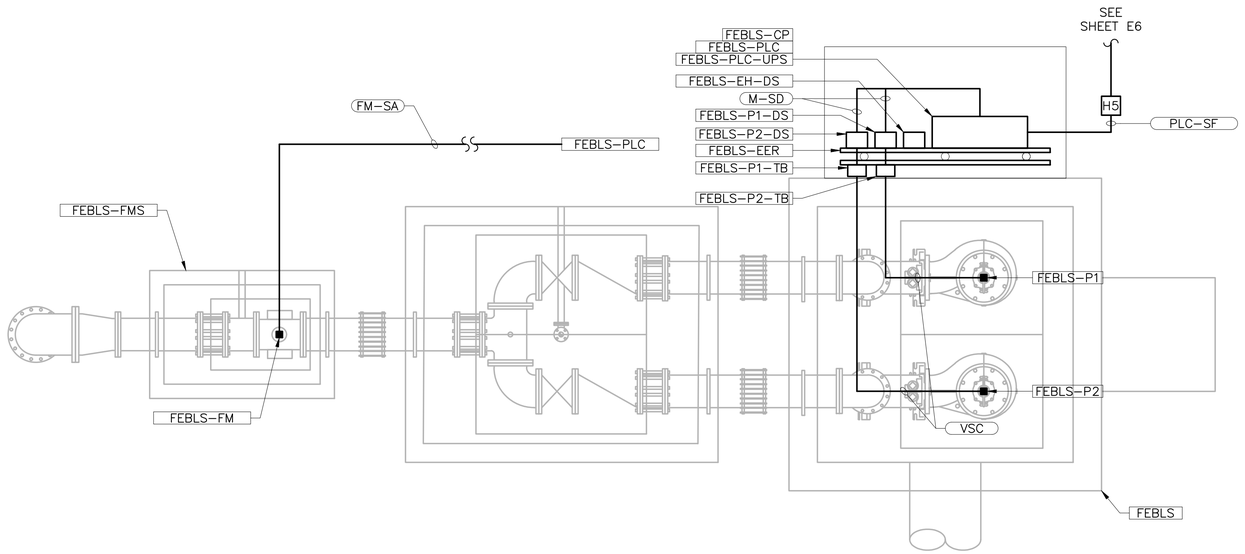

2 — CONTROL PLAN
SCALE: 3/8 = 1'-0"

WALL ENGINEERING
PO BOX 1457, DURANT, OK 74702
OKLAHOMA CA #5413 EXP. JUNE 30, 2021

SUBMITTAL / REVISIONS:

DATE	BY	SUBMITTAL / REVISION

SHAWNEE MUNICIPAL AUTHORITY
SOUTHSIDE WWTP IMPROVEMENTS
SHAWNEE, OKLAHOMA

FLOW EQUALIZATION BASIN RETURN LIFT STATION "FEBLS" POWER, CONTROL AND LIGHTING PLANS

PROJECT NO.	SHN-20-01
DATE	09/20
DRAWN BY:	CD
CHECKED BY:	BB
REVIEWED BY:	BB
SCALE:	AS SHOWN

BAR IS ONE INCH ON ORIGINAL DRAWING
0" 1"
IF NOT ONE INCH ON THIS SHEET, ADJUST SCALES ACCORDINGLY

REGISTERED PROFESSIONAL ENGINEER
BRUCE W. BROWN
20995
9-20-2021
OKLAHOMA

BROWN ENGINEERS
501-448-0100

SHEET
E11

P:\PRODUCTION\PROJECTS\WALL ENGINEERING (WE)\WE-048 SHAWNEE SOUTHSIDE WWTP\DWG\E11_FLOW EQ BASIN RETURN LS PLANS.DWG
4/16/2021 2:53 PM

KEYED NOTES:

1. INSTALL SNAP SWITCH IN WEATHERPROOF ENCLOSURE TO CONTROL AREA LIGHT. WHEN SWITCH IS ON, THE AREA LIGHT SHALL BE CONTROLLED BY AN INTEGRATED PHOTOELECTRIC CELL (PEC).
2. INSTALL LEVEL TRANSMITTER ON STAINLESS STEEL MOUNTING BRACKET TO PROVIDE ULTRASONIC SIGNAL PATH MEETING LEVEL TRANSMITTER MANUFACTURERS REQUIREMENTS.
3. LEVEL SIGNAL FROM "PFEB–LT" TERMINATES AT "HW–PLC".

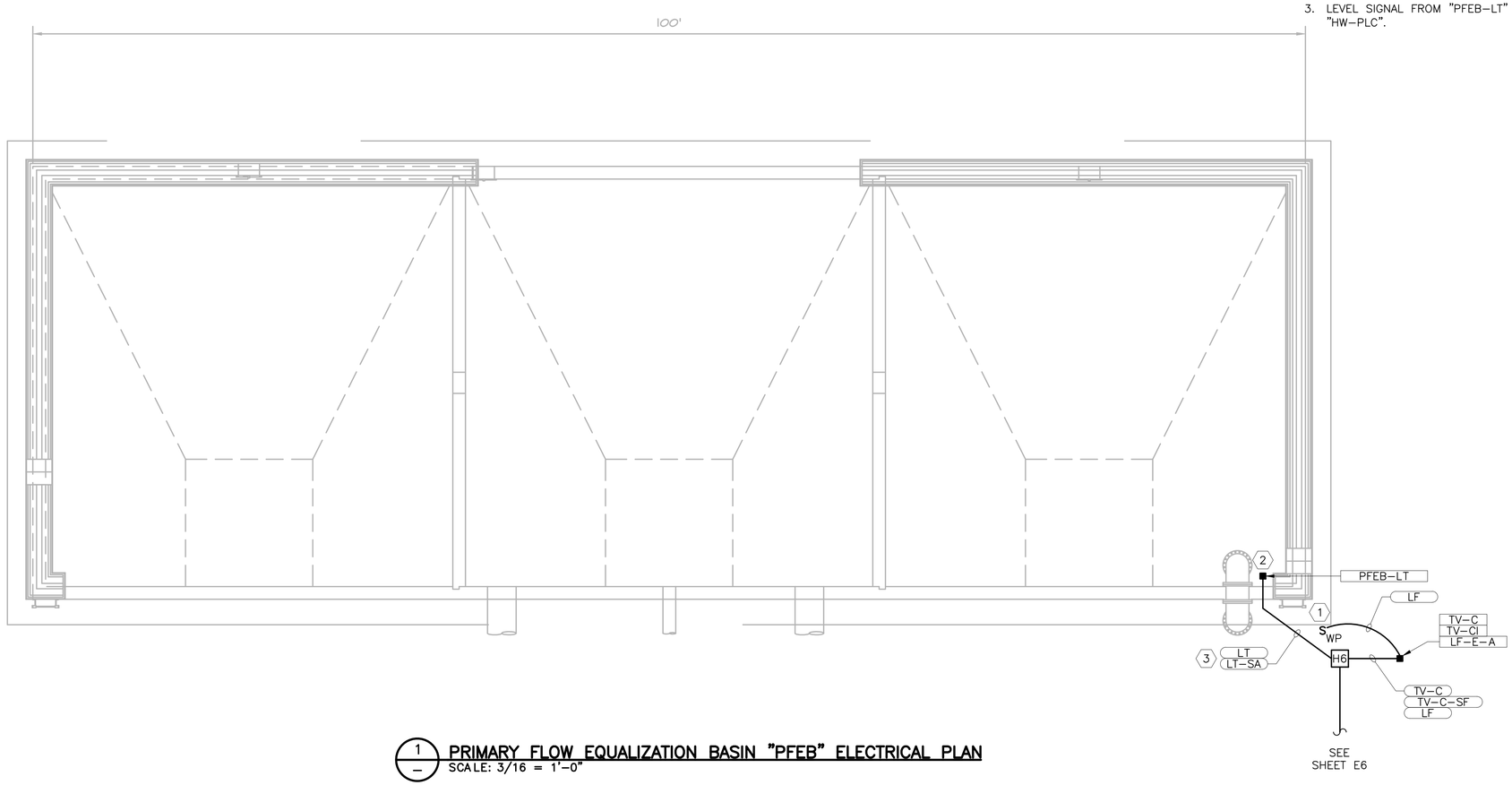

1 PRIMARY FLOW EQUALIZATION BASIN "PFEB" ELECTRICAL PLAN
SCALE: 3/16 = 1'–0"

WALL ENGINEERING
PO BOX 1457, DURANT, OK 74702
OKLAHOMA CA #5413 EXP. JUNE 30, 2021

SUBMITTAL / REVISIONS:

DATE	BY	SUBMITTAL / REVISION

SHAWNEE MUNICIPAL AUTHORITY
SOUTHSIDE WWTP IMPROVEMENTS
SHAWNEE, OKLAHOMA

PRIMARY FLOW EQUALIZATION BASIN "PFEB"
ELECTRICAL PLAN

PROJECT NO. SHN-20-01
DATE 09/20
DRAWN BY: CD
CHECKED BY: BB
REVIEWED BY: BB
SCALE: AS SHOWN

BAR IS ONE INCH ON ORIGINAL DRAWING
0" 1"
IF NOT ONE INCH ON THIS SHEET, ADJUST SCALES ACCORDINGLY

SHEET
E12

REGISTERED PROFESSIONAL ENGINEER
BRUCE W. BRYAN
20995
4-20-21
OKLAHOMA

BROWN ENGINEERS
501-448-0100

P:\PRODUCTION\PROJECTS\WALL ENGINEERING (WE)\WE-048 SHAWNEE SOUTHSIDE WWTP\DWG\E12_PRIMARY FLOW EQ BASIN CONTROL PLAN.DWG
3/25/2021 1:39 PM

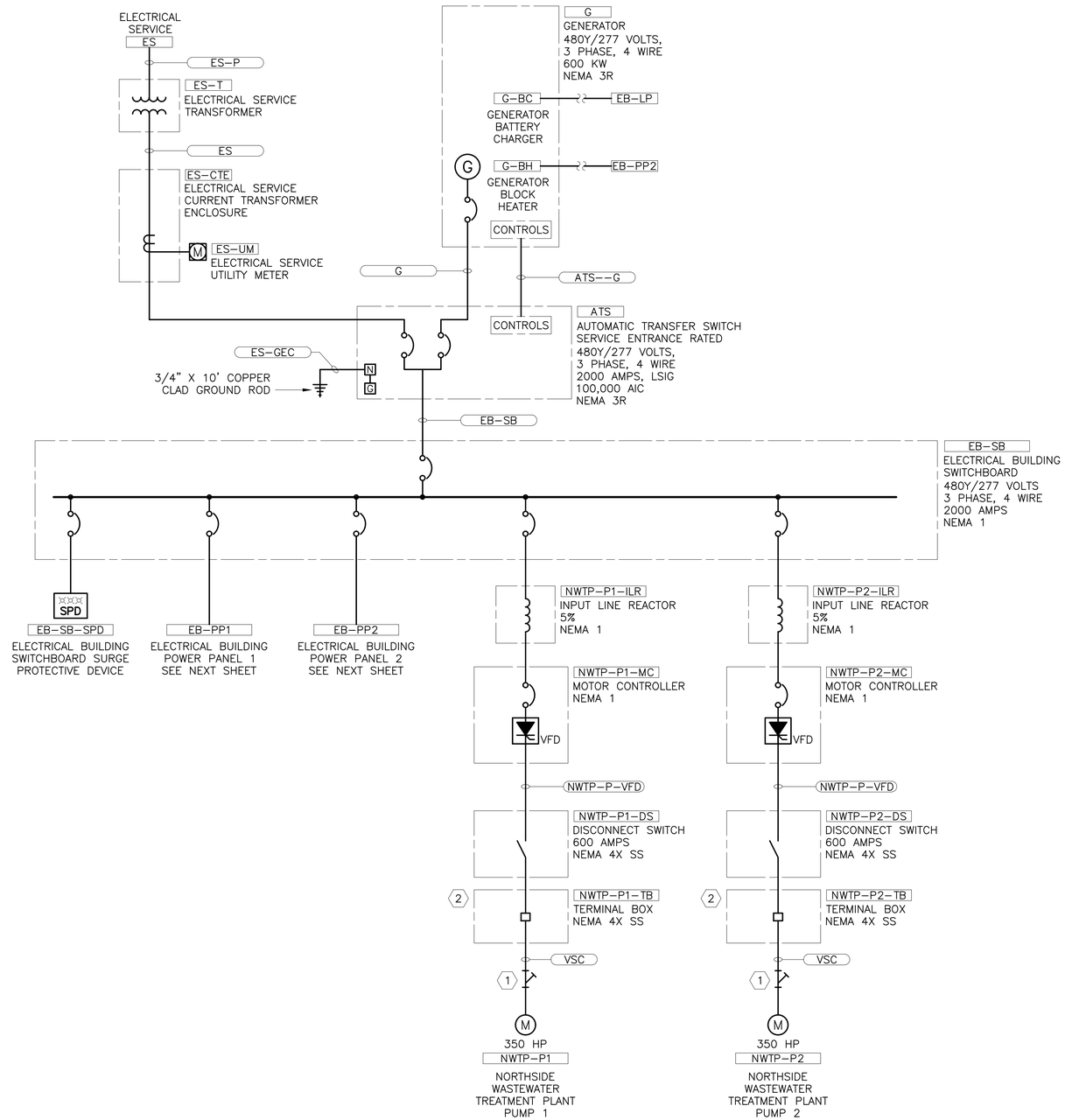

KEYED NOTES:

1. INSTALL CONDUIT SEAL FITTINGS AT HAZARDOUS (CLASSIFIED) LOCATION BOUNDARIES.
2. NEMA 4X SS, CONTINUOUS HINGE, OIL TIGHT, 1/4 TURN SEMI-FLUSH LATCH TERMINAL BOX. TERMINATE VENDOR-SUPPLIED CABLE ON POWER TERMINAL BLOCKS. INSTALL SS STRAIN RELIEF ON ALL CABLES.

WALL ENGINEERING
PO BOX 1457, DURANT, OK 74702
OKLAHOMA CA #5413 EXP. JUNE 30, 2021

SUBMITTAL / REVISIONS:

DATE	BY	SUBMITTAL / REVISION

SHAWNEE MUNICIPAL AUTHORITY
SOUTHSIDE WWTP IMPROVEMENTS
SHAWNEE, OKLAHOMA

POWER SYSTEM ONE-LINE DIAGRAM I

PROJECT NO.	SHN-20-01
DATE	09/20
DRAWN BY:	CD
CHECKED BY:	BB
REVIEWED BY:	BB
SCALE:	AS SHOWN

BAR IS ONE INCH ON ORIGINAL DRAWING
0" 1"
IF NOT ONE INCH ON THIS SHEET, ADJUST SCALES ACCORDINGLY

SHEET
E13

REGISTERED PROFESSIONAL ENGINEER
BRUCE W. BROWN
20995
4-20-21
OKLAHOMA

BROWN ENGINEERS
501-448-0100

P:\PRODUCTION\PROJECTS\WALL ENGINEERING (WE)\WE-048 SHAWNEE SOUTHSIDE WWTP\DWG\E13_POWER SYSTEM ONE-LINE DIAGRAM I.DWG
4/16/2021 11:44 AM

KEYED NOTES:

1. INSTALL CONDUIT SEAL FITTINGS AT HAZARDOUS (CLASSIFIED) LOCATION BOUNDARIES.
2. NEMA 4X SS, CONTINUOUS HINGE, OIL TIGHT, 1/4 TURN SEMI-FLUSH LATCH TERMINAL BOX. TERMINATE VENDOR-SUPPLIED CABLE ON POWER TERMINAL BLOCKS. INSTALL SS STRAIN RELIEF ON ALL CABLES.

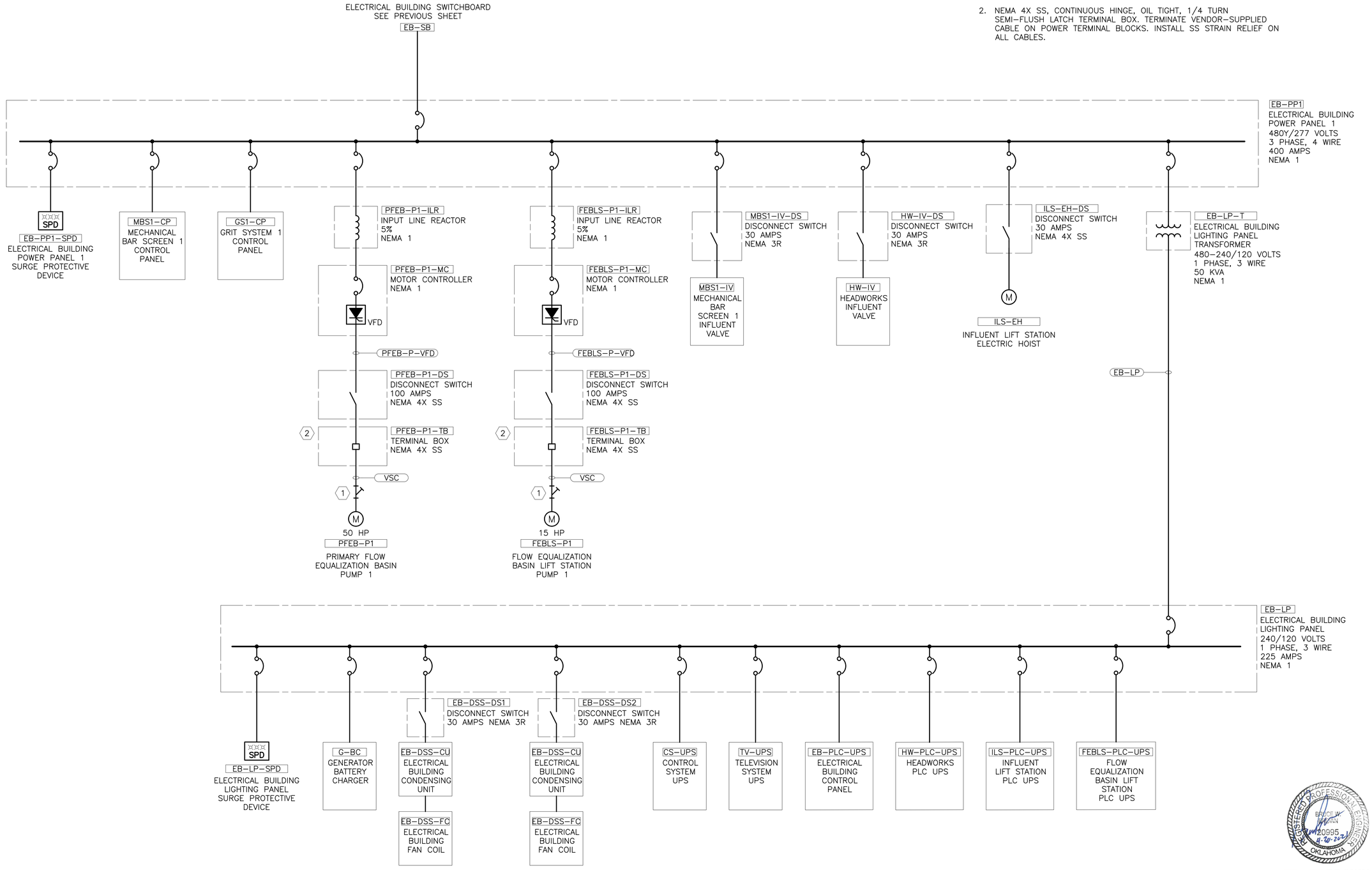

WALL ENGINEERING
PO BOX 1457, DURANT, OK 74702
OKLAHOMA CA #5413 EXP. JUNE 30, 2021

SUBMITTAL / REVISIONS:

DATE	BY	SUBMITTAL / REVISION

SHAWNEE MUNICIPAL AUTHORITY
SOUTHSIDE WWTP IMPROVEMENTS
SHAWNEE, OKLAHOMA

POWER SYSTEM ONE-LINE DIAGRAM II

PROJECT NO.	SHN-20-01
DATE	09/20
DRAWN BY:	CD
CHECKED BY:	BB
REVIEWED BY:	BB
SCALE:	AS SHOWN

BAR IS ONE INCH ON ORIGINAL DRAWING
0" 1"
IF NOT ONE INCH ON THIS SHEET, ADJUST SCALES ACCORDINGLY

SHEET
E14

REGISTERED PROFESSIONAL ENGINEER
BRUCE W. BROWN
20995
9-20-2021
OKLAHOMA

BROWN ENGINEERS
501-448-0100

P:\PRODUCTION\PROJECTS\WALL ENGINEERING (WE)\WE-048 SHAWNEE SOUTHSIDE WWTP\DWG\E14_POWER SYSTEM ONE-LINE DIAGRAM II.DWG
5/4/2021 8:49 AM

KEYED NOTES:

1. INSTALL CONDUIT SEAL FITTINGS AT HAZARDOUS (CLASSIFIED) LOCATION BOUNDARIES.
2. NEMA 4X SS, CONTINUOUS HINGE, OIL TIGHT, 1/4 TURN SEMI-FLUSH LATCH TERMINAL BOX. TERMINATE VENDOR-SUPPLIED CABLE ON POWER TERMINAL BLOCKS. INSTALL SS STRAIN RELIEF ON ALL CABLES.
3. AUXILIARY CONTACT. REFER TO WIRING DIAGRAM.

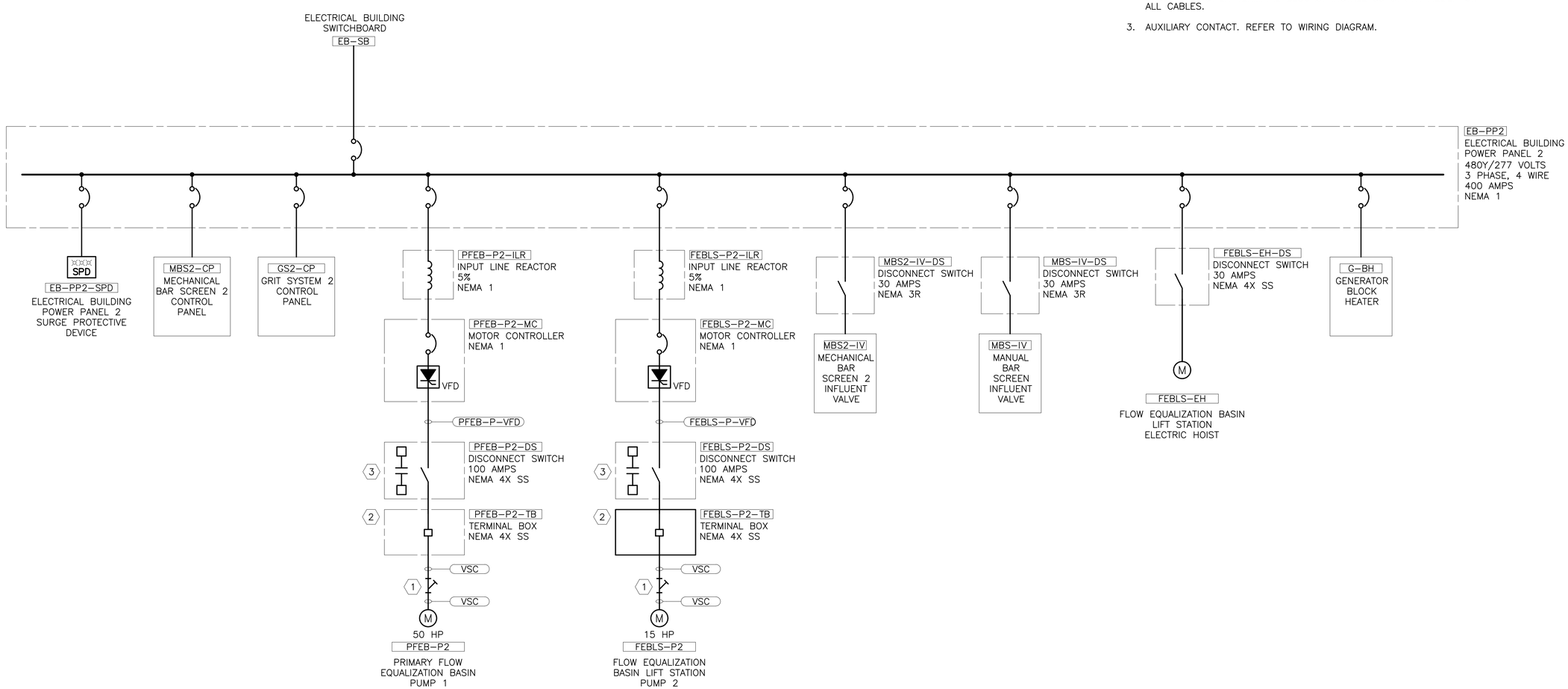

P:\PRODUCTION\PROJECTS\WALL ENGINEERING (WE)\WE-048 SHAWNEE SOUTHSIDE WWTP\DWG\E15_POWER SYSTEM ONE-LINE DIAGRAM III.DWG
4/16/2021 2:04 PM

WALL ENGINEERING
PO BOX 1457, DURANT, OK 74702
OKLAHOMA CA #5413 EXP. JUNE 30, 2021

SUBMITTAL / REVISIONS:

DATE	BY	SUBMITTAL / REVISION

SHAWNEE MUNICIPAL AUTHORITY
SOUTHSIDE WWTP IMPROVEMENTS
SHAWNEE, OKLAHOMA

POWER SYSTEM ONE-LINE DIAGRAM III

PROJECT NO. SHN-20-01
DATE 09/20
DRAWN BY: CD
CHECKED BY: BB
REVIEWED BY: BB
SCALE: AS SHOWN

BAR IS ONE INCH ON ORIGINAL DRAWING
0' 1'
IF NOT ONE INCH ON THIS SHEET, ADJUST SCALES ACCORDINGLY

REGISTERED PROFESSIONAL ENGINEER
BRUCE W. BROWN
20995
OKLAHOMA
4-20-2021

BROWN ENGINEERS
501-448-0100

SHEET
E15

Switchboard Schedule

General		Main		Circuit Breaker		Bus	
Name	EB–SB	Amps	2000	Trip	2000	Material	Tin Plated Copper
System	480Y/277 Volts, 3 Phase, 4 Wire	Type	MCB	Pole	3	Neutral	100%
Location	Electrical Building			Frame	2000	AIC Rating	100,000
Enclosure	NEMA 1			Type	LSIG		

No.	Description	Note	Hp	Load kVA	Load Amps	Circuit Schedule Id	Circuit Breaker Trip	Pole	Frame	Type
1	SPD "EB–SB–SPD"	–	–	–	–	SPD–3	60	3	100	–
2	Power Panel "EB–PP1"	–	–	133.435	160.50	EB–PP	400	3	600	–
3	Power Panel "EB–PP2"	–	–	118.415	142.44	EB–PP	400	3	600	–
4	Pump "NWTP–P1"	–	350	344.183	414.00	NWTP–P	700	3	800	–
5	Pump "NWTP–P2"	–	350	344.183	414.00	NWTP–P	700	3	800	–
6	–	–	–	–	–	–	–	–	–	–
7	–	–	–	–	–	–	–	–	–	–
8	Spare	–	–	–	–	–	60	3	100	–
9	Spare	–	–	–	–	–	400	3	600	–
10	Spare	–	–	–	–	–	700	3	800	–

Design Factor		Design Load, Total Load Basis	
NEC Design Factor	1.2500	Total Load, kVA	940.216
Spare Capacity	1.2500	Total Load, A	1,130.94
Diversity Factor	1.0000	Design Load, kVA	1,469.088
Design Factor	1.5625	Design Load, Amps	1,767.09

Lighting Panel Schedule

General		Main		Circuit Breaker		Bus	
Name	EB–LP	Amps	225	Trip	225	Material	Tin Plated Copper
System	240/120 Volts, 1 Phase, 3 Wire	Type	MCB	Pole	2	Neutral	100%
Location	Electrical Building			Frame	225	AIC Rating	25,000
Enclosure	NEMA 1			Type	–		

No.	Description	Note	Load kVA	Load Amps	Circuit Schedule Id	Circuit Breaker Trip	Pole	Phase	Load kVA	Circuit Breaker Trip	Pole	Circuit Schedule Id	Load Amps	Load kVA	Note	Description	No.
1	SPD "EB–LP–SPD"	–	–	–	SPD–2	60	2	A	0.213	20	1	20–111	1.78	0.213	–	Lights, Exterior	2
3	"	–	–	–	–	–	–	B	0.480	20	1	20–111	4.00	0.480	–	Lights, Interior	4
5	Battery Charger "G–BC"	–	1.200	10.00	G–BC	20	1	A	1.920	20	1	20–111	6.00	0.720	–	Recepts, North	6
7	Spare	–	–	–	–	20	1	B	0.360	20	1	20–111	3.00	0.360	–	Recepts, South	8
9	Split System "EB–DSS"	–	2.800	–	DSS	30	2	A	0.540	20	1	20–111	4.50	0.540	–	Recepts, East	10
11	"	–	2.800	–	–	–	–	B	0.540	20	1	20–111	4.50	0.540	–	Recepts, West	12
13	Heat Trace "HW–HT"	–	1.200	10.00	HT	20	1	A	2.400	20	1	20–111	10.00	1.200	–	UPS "CS–UPS"	14
15	Heat Trace "HW–HT"	–	1.200	10.00	HT	20	1	B	2.400	20	1	20–111	10.00	1.200	–	UPS "TV–UPS"	16
17	Heat Trace "HW–HT"	–	1.200	10.00	HT	20	1	A	2.400	20	1	PLC–UPS	10.00	1.200	–	UPS "HW–PLC–UPS"	18
19	Heat Trace "HW–HT"	–	1.200	10.00	HT	20	1	B	2.400	20	1	PLC–UPS	10.00	1.200	–	UPS "ILS–PLC–UPS"	20
21	Heat Trace "HW–HT"	–	1.200	10.00	HT	20	1	A	2.400	20	1	PLC–UPS	10.00	1.200	–	UPS "FEBLS–PLC–UPS"	22
23	Heat Trace "HW–HT"	–	1.200	10.00	HT	20	1	B	1.350	20	1	LF	1.25	0.150	–	Lighting, "FEBLS"	24
25	Heat Trace "HW–HT"	–	1.200	10.00	HT	20	1	A	1.350	20	1	LF	1.25	0.150	–	Lighting, "PFEB"	26
27	Heat Trace "HW–HT"	–	1.200	10.00	HT	20	1	B	1.320	20	1	FM	1.00	0.120	–	Flow Meter "FEBLS–FM"	28
29	Headworks Lights, Exterior	–	0.427	3.56	–	20	1	A	0.547	20	1	FM	1.00	0.120	–	Flow Meter "NWTP–FM"	30
31	Headworks Lights, Interior	–	0.996	8.30	–	20	1	B	1.116	20	1	FM	1.00	0.120	–	Flow Meter "PFEB–FM"	32
33	EB–DSS	–	2.800	–	–	20	1	A	0.120	20	1	LT	1.00	0.120	–	Level Transmitter "PFEB–LT"	34
35	EB–DSS	–	2.800	–	–	30	2	B	–	20	1	–	–	–	–	Spare	36
37	"	–	–	–	–	–	–	A	–	20	1	–	–	–	–	Spare	38
39	Spare	–	–	–	–	60	2	B	–	20	1	–	–	–	–	Spare	40
41	"	–	–	–	–	–	–	A	–	20	1	–	–	–	–	Spare	42

Connected Load				
Phase	A	B	C	Total
Load, kVA	17.490	15.560	–	33.050
Current, Amps				
Balance, %				

Design Factor		Design Load, Total Load Basis	
NEC Design Factor	1.2500	Total Load, kVA	33.050
Spare Capacity	1.2500	Total Load, A	
Diversity Factor	1.0000	Design Load, kVA	51.600
Design Factor	1.5625	Design Load, Amps	215.000

Note:
1 Block heater may be 120 or 240 volts. Field verify Existing Generator "X–G" block header and coordinate Circuit Breaker and Circuit to match.

Power Panel Schedule

General		Main		Circuit Breaker		Bus	
Name	EB–PP1	Amps	400	Trip	400	Material	Tin Plated Copper
System	480Y/277 Volts, 3 Phase, 4 Wire	Type	MCB	Pole	3	Neutral	100%
Location	Electrical Building			Frame	600	AIC Rating	65,000
Enclosure	NEMA 1			Type	–		

No.	Description	Note	Hp	Load kVA	Load Amps	Circuit Schedule Id	Circuit Breaker Trip	Pole	Frame	Type
1	SPD "EB–PP1–SPD"	–	–	–	–	SPD–3	60	3	100	–
2	Control Panel "MBS1–CP"	–	–	6.300	7.58	MBS–CP	20	3	100	–
3	Control Panel "GS1–CP"	–	–	26.300	31.63	GS–CP	70	3	100	–
4	Pump "PFEB–P1"	–	50	54.038	65.00	PFEB–P	100	3	100	–
5	Pump "FEBLS–P1"	–	15	17.459	21.00	FEBLS–P	40	3	100	–
6	Valve "MBS1–IV"	–	1	1.746	2.10	VO	15	3	100	–
7	Valve "HW–IV"	–	1	1.746	2.10	VO	15	3	100	–
8	Electric Hoist "ILS–EH"	–	3	3.991	4.80	ILS–EH	15	3	100	–
9	Lighting Panel "EB–LP"	–	–	21.856	45.53	EB–LP–T	150	2	250	–
10	–	–	–	–	–	–	–	–	–	–
11	–	–	–	–	–	–	–	–	–	–
12	–	–	–	–	–	–	–	–	–	–
13	–	–	–	–	–	–	–	–	–	–
14	Spare	–	–	–	–	–	15	3	100	–
15	Spare	–	–	–	–	–	20	3	100	–
16	Spare	–	–	–	–	–	40	3	100	–
17	Spare	–	–	–	–	–	60	3	100	–
18	Spare	–	–	–	–	–	70	3	100	–
19	Spare	–	–	–	–	–	100	3	100	–
20	Spare	–	–	–	–	–	150	2	250	–

Design Factor		Design Load, Total Load Basis	
NEC Design Factor	1.2500	Total Load, kVA	133.435
Spare Capacity	1.2500	Total Load, A	160.50
Diversity Factor	1.0000	Design Load, kVA	208.492
Design Factor	1.5625	Design Load, Amps	250.78

Power Panel Schedule

General		Main		Circuit Breaker		Bus	
Name	EB–PP2	Amps	400	Trip	400	Material	Tin Plated Copper
System	480Y/277 Volts, 3 Phase, 4 Wire	Type	MCB	Pole	3	Neutral	100%
Location	Electrical Building			Frame	600	AIC Rating	65,000
Enclosure	NEMA 1			Type	–		

No.	Description	Note	Hp	Load kVA	Load Amps	Circuit Schedule Id	Circuit Breaker Trip	Pole	Frame	Type
1	SPD "EB–PP2–SPD"	–	–	–	–	SPD–3	60	3	100	–
2	Control Panel "MBS2–CP"	–	–	6.300	7.58	MBS–CP	20	3	100	–
3	Control Panel "GS2–CP"	–	–	26.300	31.63	GS–CP	70	3	100	–
4	Pump "PFEB–P2"	–	50	54.038	65.00	PFEB–P	100	3	100	–
5	Pump "FEBLS–P2"	–	15	17.459	21.00	FEBLS–P	40	3	100	–
6	Valve "MBS2–IV"	–	1	1.746	2.10	VO	15	3	100	–
7	Valve "MBS–IV"	–	1	1.746	2.10	VO	15	3	100	–
8	Electric Hoist "FEBLS–EH"	–	2	2.827	3.40	FEBLS–EH	15	3	100	–
9	Generator Block Heater "G–BH"	–	–	8.000	9.62	G–BH	20	3	100	–
10	–	–	–	–	–	–	–	–	–	–
11	–	–	–	–	–	–	–	–	–	–
12	–	–	–	–	–	–	–	–	–	–
13	–	–	–	–	–	–	–	–	–	–
14	–	–	–	–	–	–	–	–	–	–
15	Spare	–	–	–	–	–	15	3	100	–
16	Spare	–	–	–	–	–	20	3	100	–
17	Spare	–	–	–	–	–	40	3	100	–
18	Spare	–	–	–	–	–	60	3	100	–
19	Spare	–	–	–	–	–	70	3	100	–
20	Spare	–	–	–	–	–	100	3	100	–

Design Factor		Design Load, Total Load Basis	
NEC Design Factor	1.2500	Total Load, kVA	118.415
Spare Capacity	1.2500	Total Load, A	142.44
Diversity Factor	1.0000	Design Load, kVA	185.024
Design Factor	1.5625	Design Load, Amps	222.56

WALL ENGINEERING
PO BOX 1457, DURANT, OK 74702
OKLAHOMA CA #5413 EXP. JUNE 30, 2021

SUBMITTAL / REVISIONS:

DATE	BY	SUBMITTAL / REVISION

SHAWNEE MUNICIPAL AUTHORITY
SOUTHSIDE WWTP IMPROVEMENTS
SHAWNEE, OKLAHOMA

POWER SYSTEM SCHEDULES I

PROJECT NO. ~~SHN-20-01~~
DATE 09/20
DRAWN BY: CD
CHECKED BY: BB
REVIEWED BY: BB
SCALE: AS SHOWN

BAR IS ONE INCH ON ORIGINAL DRAWING
0" 1"
IF NOT ONE INCH ON THIS SHEET, ADJUST SCALES ACCORDINGLY

SHEET
E16

REGISTERED PROFESSIONAL ENGINEER
BRUCE W. BROWN
20995
8-20-21
OKLAHOMA

BROWN ENGINEERS
501-448-0100

P:\PRODUCTION\PROJECTS\WALL ENGINEERING (WE)\WE-048 SHAWNEE SOUTHSIDE WWTP\DWG\E16_SCHEDULES I.DWG
5/4/2021 8:52 AM

Circuit Schedule			
Id	Type Id	Circuit	Note
20-111	20-111	(1-#12 PH, 1-#12 N, 1-#12 EGC) 3/4" C	-
ATS--G	SD-10	(10-#14) 3/4" C	1
DSS	30-211	(2-#10 PH, 1-#10 N, 1-#10 EGC) 1" C	-
EB-LP	225-211	(2-4/0 PH, 1-4/0 N, 1-#4 EGC) 2-1/2" C	-
EB-LP-T	150-201	(2-1/0 PH, 1-#6 EGC) 2" C	-
EB-PP	250-301	(3-250 PH, 1-#4 EGC) 3" C	-
EB-SB	2000-311	6 (3-500 PH, 1-500 N, 1-250 EGC) 4" C	-
ES	2000-301	6 (3-500 PH, 1-250 EGC) 4" C	-
ES-GEC	2000-GEC	(1-3/0 GEC) 1" C	-
ES-P	-	6 (Empty) 4" C	2
FEBLS-EH	30-301	(3-#10 PH, 1-#10 EGC) 1" C	-
FEBLS-P	40-301	(3-#8 PH, 1-#10 EGC) 1-1/4" C	-
FEBLS-P-VFD	50-VFD	(1-#8 VFD) 2" C	-
FM	20-111	(1-#12 PH, 1-#12 N, 1-#12 EGC) 3/4" C	-
FM-SA	SA-1	(1-#16 STP) 3/4" C	-
G	1000-311	3 (3-500 PH, 1-500 N, 1-2/0 EGC) 4" C	-
G-BC	20-111	(1-#12 PH, 1-#12 N, 1-#12 EGC) 3/4" C	-
G-BH	20-311	(3-#12 PH, 1-#12 N, 1-#12 EGC) 1" C	-
GS-CP	80-301	(3-#4 PH, 1-#8 EGC) 1-1/4" C	-
GS-CP-SD	SD-30	(30-#14) 2" C	-
HT	30-111	(1-#10 PH, 1-#10 N, 1-#10 EGC) 1" C	-
ILS-EH	30-301	(3-#10 PH, 1-#10 EGC) 1" C	-
LF	30-111	(1-#10 PH, 1-#10 N, 1-#10 EGC) 1" C	-
LT	30-111	(1-#10 PH, 1-#10 N, 1-#10 EGC) 1" C	-
LT-SA	SA-1	(1-#16 STP) 3/4" C	-
M-SD	SD-10	(10-#14) 3/4" C	-
MBS-CP	20-111	(1-#12 PH, 1-#12 N, 1-#12 EGC) 3/4" C	-
MBS-CP-SD	SD-30	(30-#14) 2" C	-
NWTP-P	600-301	2 (3-350 PH, 1-1/0 EGC) 3" C	-
NWTP-P-VFD	620-VFD	2 (1-350 VFD) 4" C	-
PFEB-P	90-301	(3-#2 PH, 1-#8 EGC) 1-1/2" C	-
PFEB-P-VFD	115-VFD	(1-#2 VFD) 2" C	-
PLC-SF	SF-2	(6-Fiber Optic) 1" C	-
PLC-UPS	30-111	(1-#10 PH, 1-#10 N, 1-#10 EGC) 1" C	-
SE-1	SE-1	(1-Ethernet) 3/4" C	-
SPD-2	60-211	(2-#6 PH, 1-#6 N, 1-#10 EGC) 1-1/4" C	-
SPD-3	60-311	(3-#6 PH, 1-#6 N, 1-#10 EGC) 1-1/4" C	-
TV-C	30-111	(1-#10 PH, 1-#10 N, 1-#10 EGC) 1" C	-
TV-C-SF	SF-2	(2-Fiber Optic) 1" C	-
VFD-SA	SA-2	(2-#16 STP) 1" C	-
VFD-SD	SD-12	(12-#14) 3/4" C	-
VO	20-301	(3-#12 PH, 1-#12 EGC) 3/4" C	-
VO-SA	SA-2	(2-#16 STP) 1" C	-
VO-SD	SD-12	(12-#14) 3/4" C	-
VSC	VSC	VENDOR SUPPLIED CABLE(S)	3

Note:
1 Insulate unused conductors or cables for future use
2 Coordinate quantity and size of conduit with Serving Utility
3 Coordinate quantity and size of conduit with Vendor

Light Fixture Schedule							
Id	Type	Manufacturer	Model	Lamp Type	Voltage	Watts	Note
LF-E-A	Area Light, With 20' Round Tapered Aluminum Pole	Hubbell	CL1-X-60L-U-3K-X-X-DB-7PR	LED	120 - 277	135	1
LF-E-WP	Exterior Wall Pack, LED	Hubbell	PGM3-180L-4K-U-DB-X	LED	120 - 277	48	-
LF-H	Class I, Division I, LED	Crouse Hinds	EVLL-11L-W-X-X-1-/UNV1	LED	120 - 277	112	-
LF-I-S	Interior 4' Strip, LED	Columbia	LCR-4-40-ML-E-U-PAF	LED	120 - 277	72	-

Note:
1 With 20' Round Tapered Aluminum Pole.

WALL ENGINEERING
PO BOX 1457, DURANT, OK 74702
OKLAHOMA CA #5413 EXP. JUNE 30, 2021

SUBMITTAL / REVISIONS:
DATE | BY | SUBMITTAL / REVISION

SHAWNEE MUNICIPAL AUTHORITY
SOUTHSIDE WWTP IMPROVEMENTS
SHAWNEE, OKLAHOMA

POWER SYSTEM SCHEDULES II

PROJECT NO. SHN-20-01
DATE 09/20
DRAWN BY: CD
CHECKED BY: BB
REVIEWED BY: BB
SCALE: AS SHOWN

BAR IS ONE INCH ON ORIGINAL DRAWING
0" 1"
IF NOT ONE INCH ON THIS SHEET, ADJUST SCALES ACCORDINGLY

SHEET
E17

REGISTERED PROFESSIONAL ENGINEER
BRUCE W. BROWN
20995
4-20-2021
OKLAHOMA

BROWN ENGINEERS
501-448-0100

P:\PRODUCTION\PROJECTS\WALL ENGINEERING (WE)\WE-048 SHAWNEE SOUTHSIDE WWTP\DWG\E17_SCHEDULES II.DWG
4/16/2021 2:05 PM

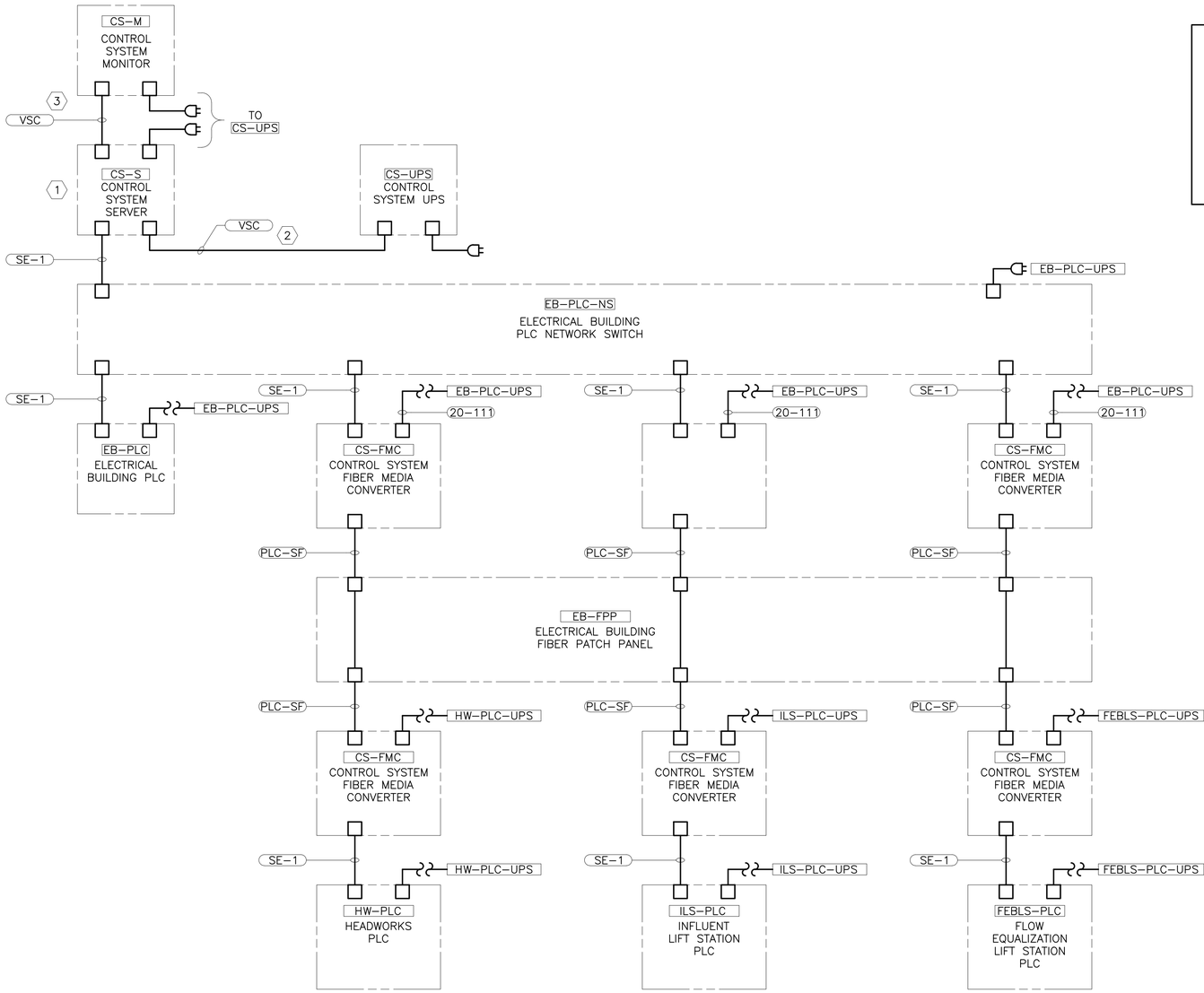

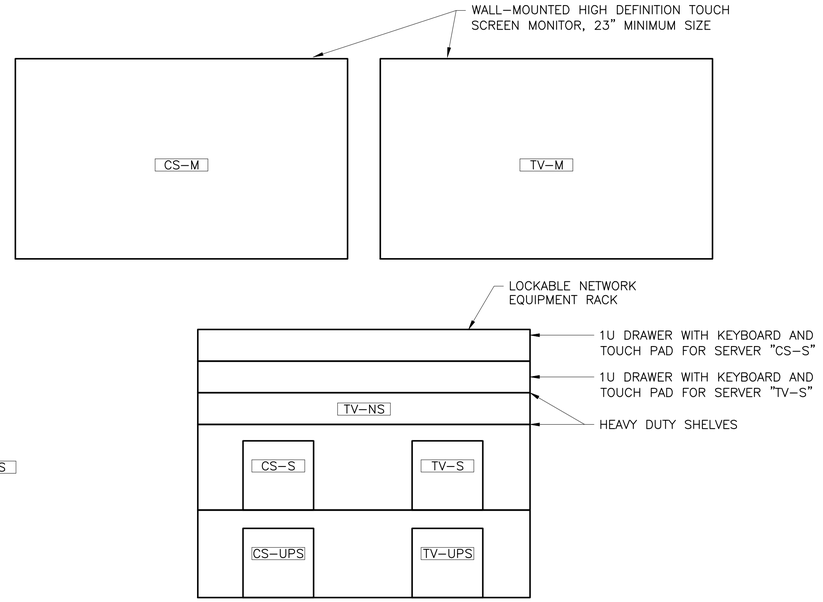

1 — NETWORK EQUIPMENT RACK "EB–NER" DETAIL
SCALE: NONE

KEYED NOTES:

1. SERVERS SHALL BE CONFIGURED TO PERFORM AN ORDERLY SHUTDOWN ON LOW UPS BATTERY LEVEL.
2. UPS COMMUNICATION CABLE.
3. MONITOR CABLE.

WALL ENGINEERING
PO BOX 1457, DURANT, OK 74702
OKLAHOMA CA #5413 EXP. JUNE 30, 2021

SUBMITTAL / REVISIONS:

DATE	BY	SUBMITTAL / REVISION

SHAWNEE MUNICIPAL AUTHORITY
SOUTHSIDE WWTP IMPROVEMENTS
SHAWNEE, OKLAHOMA

CONTROL SYSTEM
POWER AND SIGNAL DIAGRAM

PROJECT NO.	SHN-20-01
DATE	09/20
DRAWN BY:	CD
CHECKED BY:	BB
REVIEWED BY:	BB
SCALE:	AS SHOWN

BAR IS ONE INCH ON ORIGINAL DRAWING
0" 1"
IF NOT ONE INCH ON THIS SHEET, ADJUST SCALES ACCORDINGLY

SHEET
E18

REGISTERED PROFESSIONAL ENGINEER
BRUCE W. BROWN
20995
4-20-2021
OKLAHOMA

BROWN ENGINEERS
501-448-0100

P:\PRODUCTION\PROJECTS\WALL ENGINEERING (WE)\WE-048 SHAWNEE SOUTHSIDE WWTP\DWG\E18_CONTROL SYSTEM - POWER AND SIGNAL DIAGRAM.DWG
4/2/2021 2:45 PM

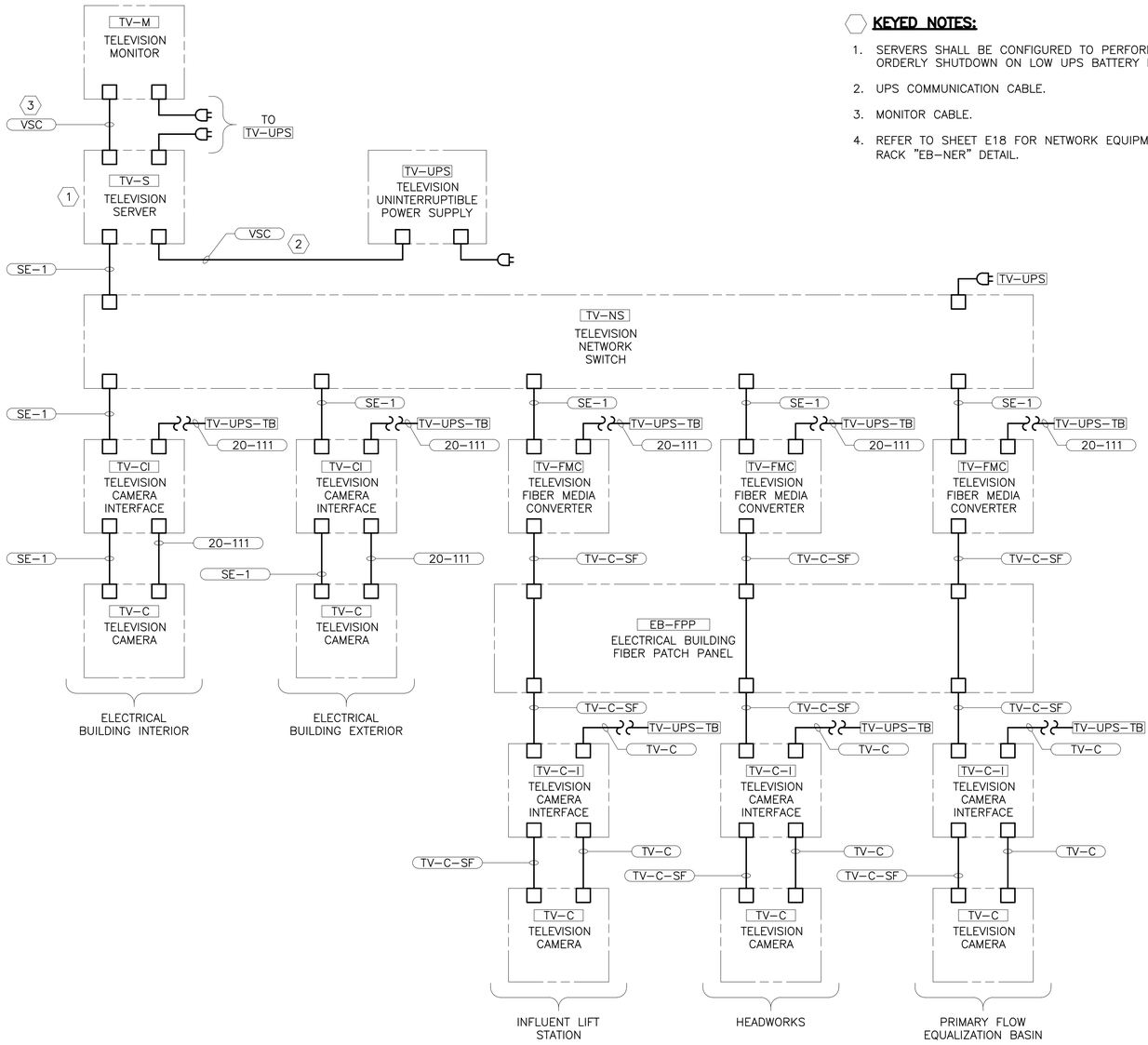

KEYED NOTES:

1. SERVERS SHALL BE CONFIGURED TO PERFORM AN ORDERLY SHUTDOWN ON LOW UPS BATTERY LEVEL.
2. UPS COMMUNICATION CABLE.
3. MONITOR CABLE.
4. REFER TO SHEET E18 FOR NETWORK EQUIPMENT RACK "EB-NER" DETAIL.

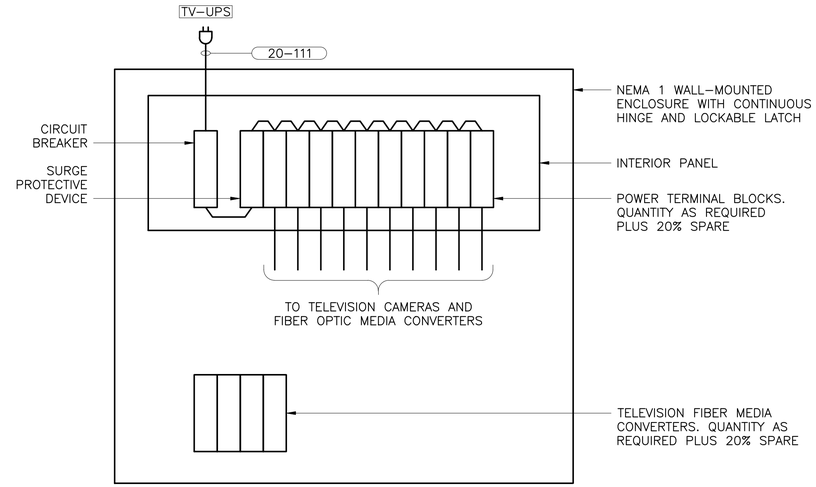

1 / – **TERMINAL BOX "TV-UPS-TB" DETAIL**
SCALE: NONE

Television Equipment			
Quantity	**Description**	**Manufacturer**	**Model No.**
5	PTZ Camera	Bosch	MIC-7502-Z30W
5	Wall Bracket	Bosch	MIC-WMB-WD
5	Adapter	Bosch	MIC-M25XNPT34
5	Adapter	Bosch	MIC-SCA-WD
5	Bracket	Bosch	MIC-PMB
5	Power Supply	Bosch	VG4-A-PSU1
5	Fiber Module	Bosch	SFP-25
5	Fiber Module	Bosch	SFP-26
5	Ethernet to SFP Interface	Bosch	VG4-SFPSCKT
5	Media Converter	Bosch	CNFE2MC/IN
1	DVR	Bosch	DIP-5244GP-4HD

WALL ENGINEERING
PO BOX 1457, DURANT, OK 74702
OKLAHOMA CA #5413 EXP. JUNE 30, 2021

SUBMITTAL / REVISIONS:

DATE	BY	SUBMITTAL / REVISION

SHAWNEE MUNICIPAL AUTHORITY
SOUTHSIDE WWTP IMPROVEMENTS
SHAWNEE, OKLAHOMA

TELEVISION SYSTEM POWER AND SIGNAL DIAGRAM

PROJECT NO. SHN-20-01
DATE 09/20
DRAWN BY: CD
CHECKED BY: BB
REVIEWED BY: BB
SCALE: AS SHOWN

BAR IS ONE INCH ON ORIGINAL DRAWING
0' 1'
IF NOT ONE INCH ON THIS SHEET, ADJUST SCALES ACCORDINGLY

REGISTERED PROFESSIONAL ENGINEER
BRUCE W. BROWN
20995
OKLAHOMA
11-20-2021

BROWN ENGINEERS
501-448-0100

SHEET
E19

P:\PRODUCTION\PROJECTS\WALL ENGINEERING (WE)\WE-048 SHAWNEE SOUTHSIDE WWTP\DWG\E19_TELEVISION SYSTEM - POWER AND SIGNAL DIAGRAM.DWG
4/16/2021 2:08 PM

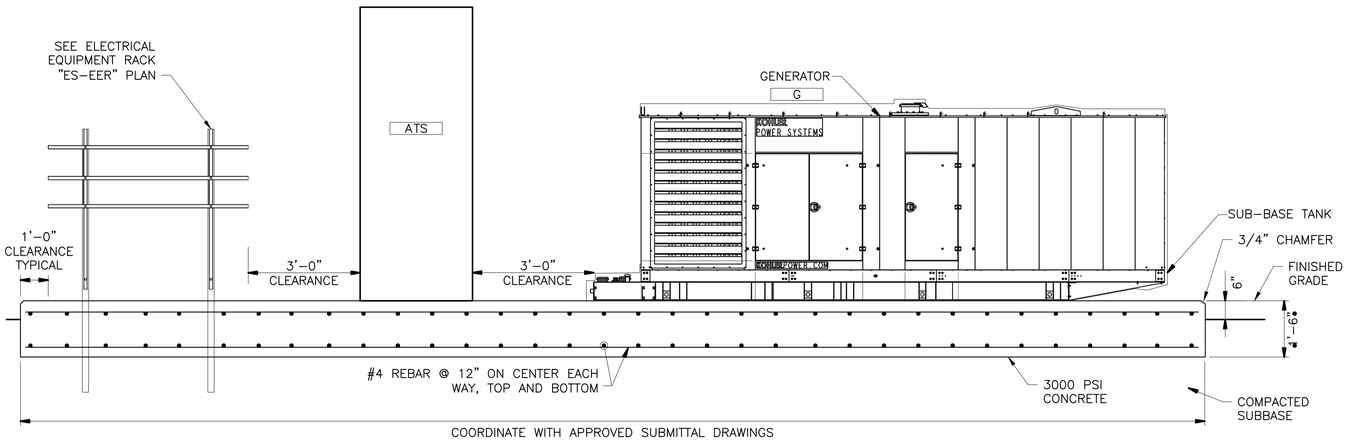

1/– **POWER SYSTEM PAD – ELEVATION**
SCALE: NONE

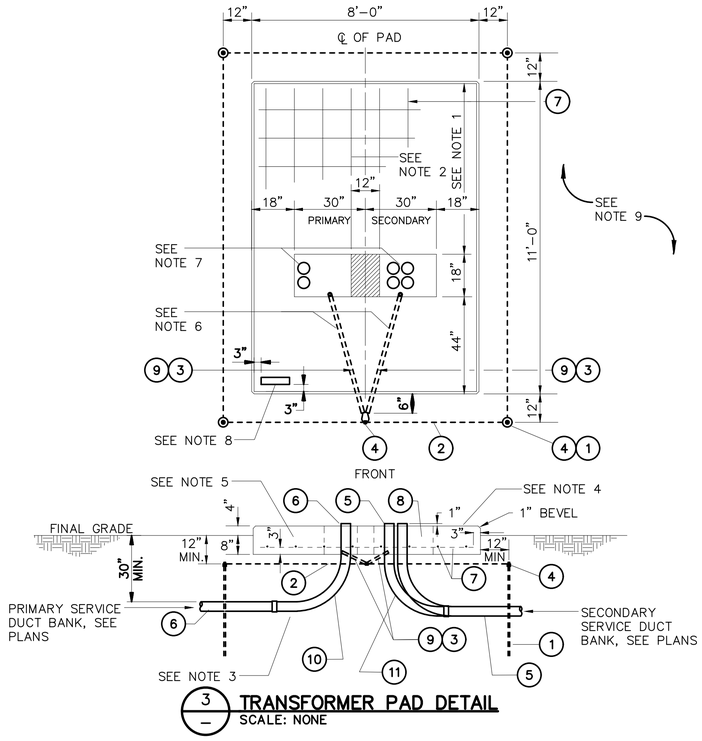

3/– **TRANSFORMER PAD DETAIL**
SCALE: NONE

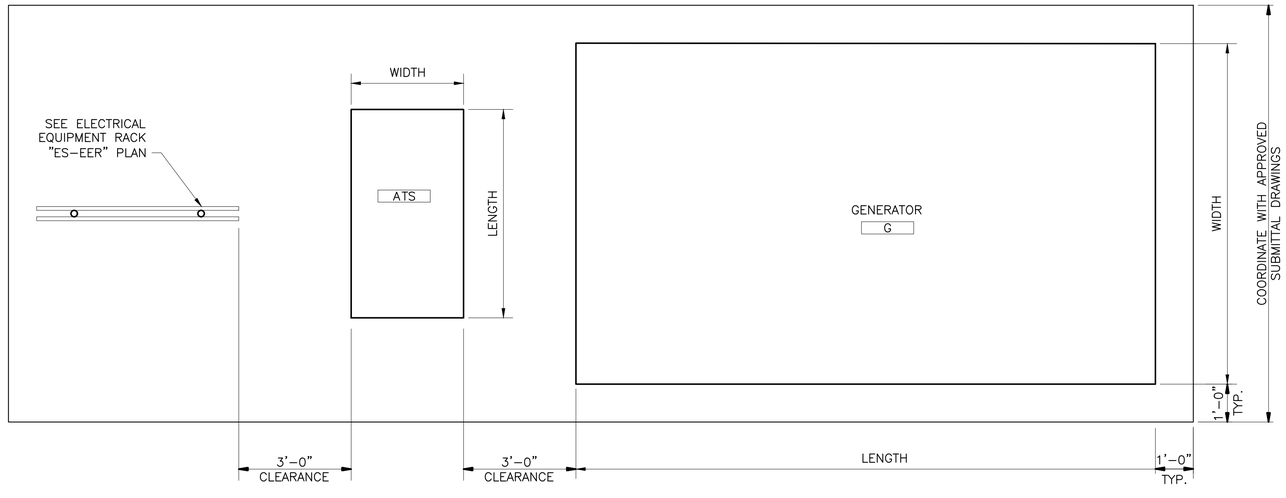

GENERATOR DIMENSIONS – APPROXIMATE				
ASSET ID	KW	LENGTH	WIDTH	NOTE
G	600	19'-1"	6'-2"	–
ATS	–	5'-9"	3'	–

NOTES:

1. APPROXIMATE DIMENSIONS SHOWN. COORDINATE ACTUAL DIMENSIONS WITH APPROVED SUBMITTAL DRAWINGS.

2/– **POWER SYSTEM PAD – PLAN**
SCALE: NONE

TRANSFORMER PAD KEYED NOTES:

1. INSTALL NEW COPPER CLAD GROUND ROD, 3/4" x 10"–0", TYPICAL OF 4.
2. INSTALL NEW #2/0 BARE COPPER CONDUCTOR (TYPICAL).
3. INSTALL NEW #2 BARE COPPER CONDUCTOR.
4. INSTALL NEW EXOTHERMIC WELD, TYPICAL OF 5.
5. INSTALL NEW SECONDARY CONDUITS, SEE SITE PLAN.
6. INSTALL NEW PRIMARY CONDUITS, SEE SITE PLAN.
7. INSTALL NEW #4 REBAR, 12"O.C. BOTH WAYS.
8. CONSTRUCT NEW PAD USING CONCRETE, 3500 PSI AT 28 DAYS.
9. INSTALL NEW 1" GRSC UNDER PAD FOR GROUND WIRES (TYPICAL).
10. UTILIZE LONG SWEEP 90° BEND PVC CONDUITS ON PRIMARY CONDUITS.
11. UTILIZE LONG SWEEP 90° BEND CONDUITS ON SECONDARY CONDUITS.

TRANSFORMER PAD NOTES:

1. WHERE POSSIBLE. DO NOT PLACE CONDUIT UNDER THIS SECTION OF FOUNDATION.
2. REINFORCING – #4 BARS 12" O.C. BOTH WAYS.
3. WHEN INSTALLING CONDUIT, DISTURB GROUND IN FOUNDATION AREA AS LITTLE AS POSSIBLE. EXTEND CONDUIT 1" ABOVE FOUNDATION.
4. TOP OF FOUNDATION TO BE SMOOTH AND LEVEL. FINAL GRADE SHALL SLOPE AWAY FROM PAD.
5. CONCRETE SHALL BE 3500 PSI AT 28 DAYS AND 1:2:4 MIXTURE WITH 6 GAL. MAX. WATER CONTENT PER SACK OF CEMENT.
6. CONTRACTOR TO FURNISH 1" CONDUIT UNDER PAD FOR GROUND WIRE.
7. LOCATE CONDUITS UNDER PRIMARY AND SECONDARY BUSHINGS.
8. TRANSFORMER LOCATION TAG SHALL BE ATTACHED TO PAD WITH CONCRETE NAILS OR SHEET METAL SCREWS.
9. TRANSFORMER PAD REQUIRES A MINIMUM 3'–0" CLEARANCE AROUND EACH SIDE AND BACK OF PAD. A 15'–0" CLEARANCE IS REQUIRED ON FRONT SIDE OF PAD.

WALL ENGINEERING
PO BOX 1457, DURANT, OK 74702
OKLAHOMA CA #5413 EXP. JUNE 30, 2021

SUBMITTAL / REVISIONS: | DATE | BY | SUBMITTAL / REVISION

SHAWNEE MUNICIPAL AUTHORITY
SOUTHSIDE WWTP IMPROVEMENTS
SHAWNEE, OKLAHOMA

ELECTRICAL DETAILS I

PROJECT NO.	SHN-20-01
DATE	09/20
DRAWN BY:	CD
CHECKED BY:	BB
REVIEWED BY:	BB
SCALE:	AS SHOWN

BAR IS ONE INCH ON ORIGINAL DRAWING (0" – 1")
IF NOT ONE INCH ON THIS SHEET, ADJUST SCALES ACCORDINGLY

SHEET
E20

REGISTERED PROFESSIONAL ENGINEER – BRICE W. BROWN – 20995 – OKLAHOMA – 4-30-2021

BROWN ENGINEERS
501-448-0100

P:\PRODUCTION\PROJECTS\WALL ENGINEERING (WE)\WE-048 SHAWNEE SOUTHSIDE WWTP\DWG\E20_DETAILS I.DWG
4/30/2021 8:11 AM

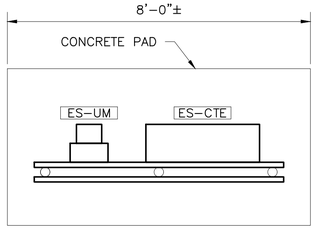

NOTES:

1. THE ESTIMATED LENGTH OF THE ELECTRICAL EQUIPMENT RACK CONCRETE PAD IS SHOWN.
2. THE CONTRACTOR SHALL DETERMINE THE ACTUAL LENGTH OF THE EQUIPMENT RACK AND CONCRETE PAD BASED ON EQUIPMENT TO BE INSTALLED.
3. THE CURRENT TRANSFORMER ENCLOSURE "ES-CTE" AND THE UTILITY METER "ES-UM" MAY BE INTEGRAL TO THE UTILITY TRANSFORMER "ES-T". IF SO, ELECTRICAL EQUIPMENT RACK "ES-EER" IS NOT REQUIRED.

2 ELECTRICAL EQUIPMENT RACK "ES-EER" PLAN
SCALE: 1/2" = 1'-0"

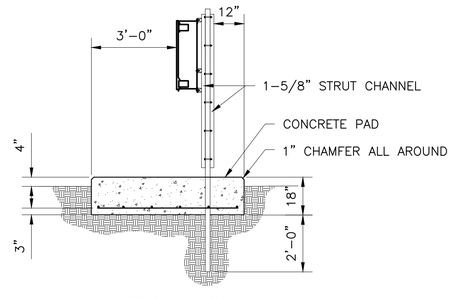

SIDE VIEW

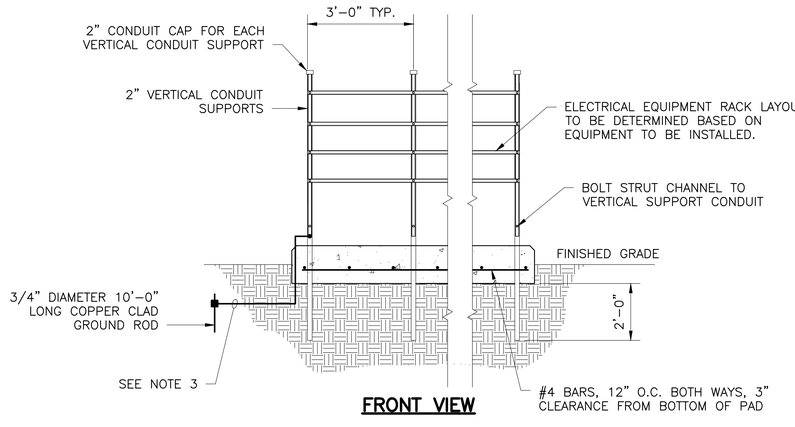

FRONT VIEW

ELECTRICAL EQUIPMENT RACK NOTES:

1. ALL CONDUIT USED TO CONSTRUCT ELECTRICAL EQUIPMENT RACK SHALL BE GALVANIZED RIGID STEEL.
2. ALL STRUT CHANNEL, BOLTS, NUTS, WASHERS, ANCHORS, PLATES, AND OTHER MOUNTING MATERIALS SHALL BE GALVANIZED STEEL.
3. BOND ELECTRICAL EQUIPMENT RACK TO COUNTERPOISE AND GROUND RINGS USING 1#4/0 AND EXOTHERMIC WELDS.
4. PROVIDE VERTICAL CONDUIT SUPPORTS EVERY 3 FEET.

1 ELECTRICAL EQUIPMENT RACK ELEVATION
SCALE: NONE

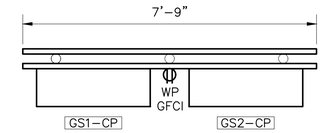

NOTES:

1. THE ESTIMATED LENGTH OF THE ELECTRICAL EQUIPMENT RACK IS SHOWN.
2. THE CONTRACTOR SHALL DETERMINE THE ACTUAL LENGTH OF THE EQUIPMENT RACK BASED ON EQUIPMENT TO BE INSTALLED.
3. "GS-EER" SHOWN, "MBS-EER" SIMILAR.

3 ELECTRICAL EQUIPMENT RACK "GS-EER" OR "MBS-EER" PLAN
SCALE: 1/2" = 1'-0"

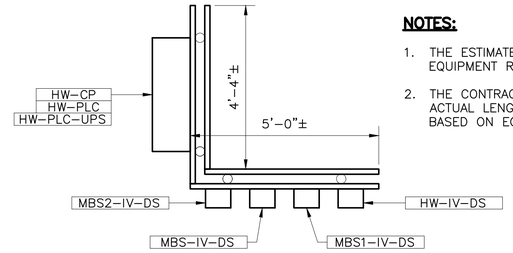

NOTES:

1. THE ESTIMATED LENGTH OF THE ELECTRICAL EQUIPMENT RACK IS SHOWN.
2. THE CONTRACTOR SHALL DETERMINE THE ACTUAL LENGTH OF THE EQUIPMENT RACK BASED ON EQUIPMENT TO BE INSTALLED.

4 ELECTRICAL EQUIPMENT RACK "HW-EER" PLAN
SCALE: 1/2" = 1'-0"

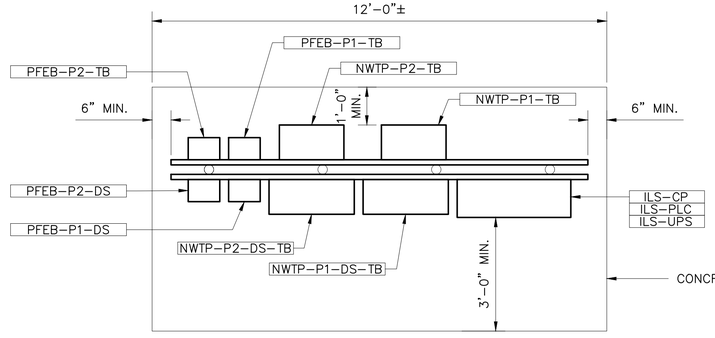

NOTES:

1. THE ESTIMATED LENGTH OF THE ELECTRICAL EQUIPMENT RACK CONCRETE PAD IS SHOWN.
2. THE CONTRACTOR SHALL DETERMINE THE ACTUAL LENGTH OF THE EQUIPMENT RACK AND CONCRETE PAD BASED ON EQUIPMENT TO BE INSTALLED.

5 ELECTRICAL EQUIPMENT RACK "ILS-EER" PLAN
SCALE: 1/2" = 1'-0"

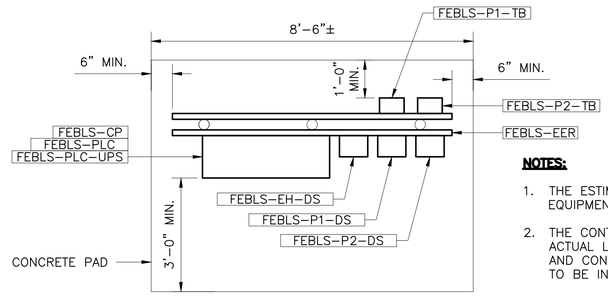

NOTES:

1. THE ESTIMATED LENGTH OF THE ELECTRICAL EQUIPMENT RACK CONCRETE PAD IS SHOWN.
2. THE CONTRACTOR SHALL DETERMINE THE ACTUAL LENGTH OF THE EQUIPMENT RACK AND CONCRETE PAD BASED ON EQUIPMENT TO BE INSTALLED.

6 ELECTRICAL EQUIPMENT RACK "FEBLS-EER" PLAN
SCALE: 1/2" = 1'-0"

WALL ENGINEERING
PO BOX 1457, DURANT, OK 74702
OKLAHOMA CA #5413 EXP. JUNE 30, 2021

SUBMITTAL / REVISIONS:

DATE	BY	SUBMITTAL / REVISION

SHAWNEE MUNICIPAL AUTHORITY
SOUTHSIDE WWTP IMPROVEMENTS
SHAWNEE, OKLAHOMA

ELECTRICAL DETAILS II

PROJECT NO.	SHN-20-01
DATE	09/20
DRAWN BY:	CD
CHECKED BY:	BB
REVIEWED BY:	BB
SCALE:	AS SHOWN

BAR IS ONE INCH ON ORIGINAL DRAWING
0' 1'
IF NOT ONE INCH ON THIS SHEET, ADJUST SCALES ACCORDINGLY

SHEET
E21

REGISTERED PROFESSIONAL ENGINEER
BRUCE W. BROWN
20995
9-20-2021
OKLAHOMA

BROWN ENGINEERS
501-448-0100

P:\PRODUCTION\PROJECTS\WALL ENGINEERING (WE)\WE-048 SHAWNEE SOUTHSIDE WWTP\DWG\E21_DETAILS II.DWG
4/19/2021 9:05 AM

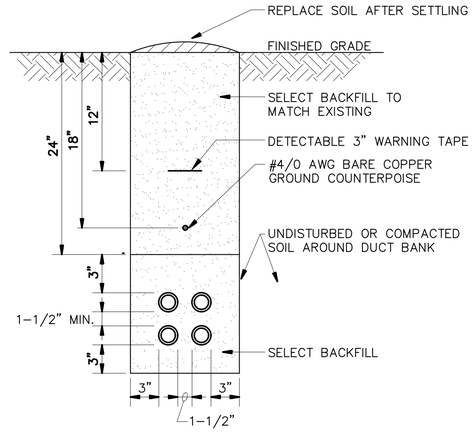

1 — **ELECTRICAL DUCT DETAIL**
SCALE: NONE

ELECTRICAL DUCT NOTES:

1. CONTRACTOR SHALL STAKE THE DUCT INSTALLATION IN PLAN AND ELEVATION FOR NEW ELECTRICAL DUCTS TO AVOID EXISTING UTILITIES.
2. CONTRACTOR SHALL ADJUST THE DEPTH OF THE ELECTRICAL DUCTS AS REQUIRED TO MAINTAIN THE MINIMUM COVER REQUIREMENT INDICATED AND AVOID EXISTING UTILITIES.
3. SIMILAR CONSTRUCTION FOR OTHER DUCT SIZES. SEE DUCT BANK SCHEDULE FOR QUANTITY AND SIZES.
4. INSTALL DUCT CONDUIT SUPPORTS AT 5'–0" O.C. MAXIMUM SPACING (TYPICAL ALL DUCTS).
5. OFFSETS AND BENDS OVER 10 DEGREES AND ELBOWS IN PVC CONDUIT RUNS SHALL BE CGRS CONDUIT.
6. NO PVC SHALL EMERGE FROM THE GROUND OR CONCRETE SLAB OR ENCASEMENT, PVC SHALL CONVERT TO CGRS CONDUIT PRIOR TO ITS EMERGENCE.
7. INSTALL GROUND RODS AT ENDS OF ELECTRICAL DUCT OR CONNECT TO GROUND RING.
8. INSTALL CONDUCTORS AND CABLES AS NOTED ON DRAWING. INSTALL PULLWIRE IN ALL SPARE DUCTS.
9. MINIMUM COVER REQUIREMENT FOR DUCT BANKS UNDER ROADS, DRIVEWAYS AND PARKING LOTS SHALL BE 24".
10. MINIMUM COVER REQUIREMENTS FOR ELECTRICAL SECONDARY SERVICE DUCT BANKS SHALL BE 30".
11. MINIMUM COVER REQUIREMENTS FOR ELECTRICAL PRIMARY SERVICE DUCT BANKS SHALL BE 36".

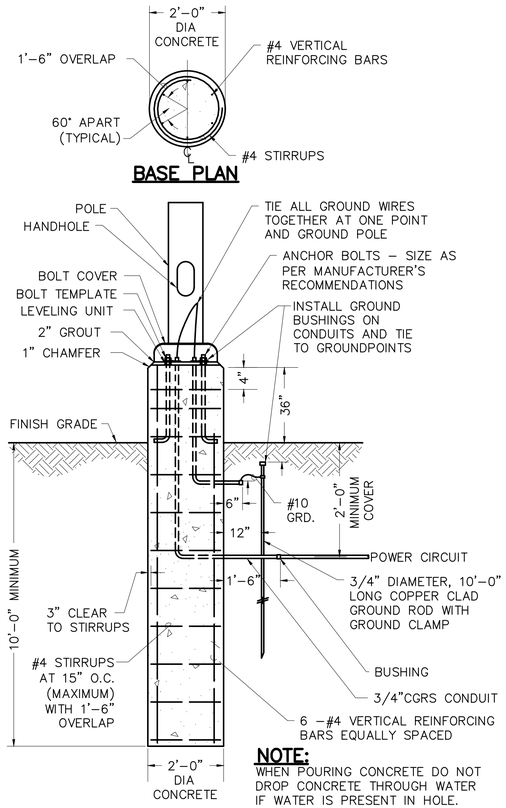

BASE PLAN

NOTE:
WHEN POURING CONCRETE DO NOT DROP CONCRETE THROUGH WATER IF WATER IS PRESENT IN HOLE.

BASE ELEVATION

3 — **LIGHT POLE BASE DETAILS**
SCALE: NONE

1. VERIFY BOLT CIRCLE AND MOUNTING WITH MANUFACTURER

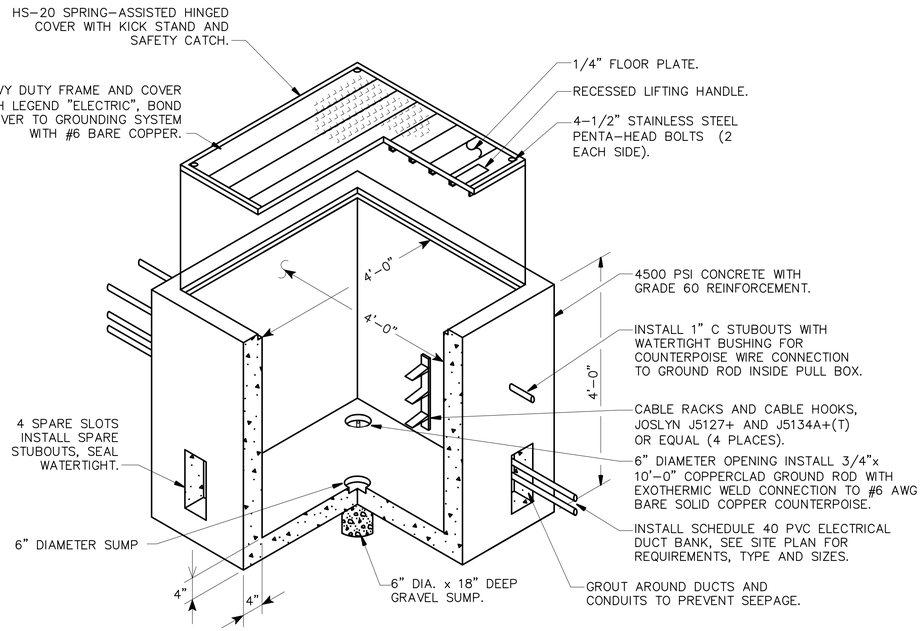

2 — **PREFABRICATED CONCRETE PULL BOX**
SCALE: NONE

NOTES:

1. EACH CABLE SHALL BE IDENTIFIED WITH BRADY WIRE MARKER GIVING CIRCUIT NUMBER (#PWC–PK–6 OR APPROVED EQUAL).
2. ALL CABLE THROUGH BOX SHALL HAVE SUFFICIENT SLACK SO CABLE CAN BE BROUGHT TO SURFACE FOR SPLICING, MINIMUM 5' SLACK CABLE LOOP.
3. COVER AND PULL BOX SHALL BE DESIGNED FOR A 60 KIPS CONCENTRATED WHEEL LOAD OVER A 12" x 24" AREA.
4. GROUND ROD INSIDE OF PULL BOX SHALL BE DRIVEN PRIOR TO PLACEMENT OF BOX AND CAST IN BOTTOM OF BOX. IT WILL NOT BE CONNECTED TO ANY CIRCUIT.
5. PROVIDE HANDHOLES WITH 2–4"C SCHEDULE 40 PVC SPARE STUBOUTS IN EACH FACE, EXTENDED 3' MINIMUM BEYOND HANDHOLE, CAPPED WATERTIGHT.
6. EXCAVATION AND BACKFILL NECESSARY FOR THE CONSTRUCTION OF THE HANDHOLE SHALL BE PERFORMED IN ACCORDANCE WITH THE SPECIFICATION REQUIREMENTS.
7. PROVIDE WATERTIGHT CONDUIT BUSHING AND WATERTIGHT SEALS FOR ALL DIRECT BURIED COUNTERPOISE ENTERING THE HANDHOLE VIA A CONDUIT STUBOUT.
8. HANDHOLE COVER SHALL BE 1" MAXIMUM ABOVE FINISHED GRADE. AREA SURROUNDING HANDHOLE SHALL BE GRADED TO DRAIN AWAY FROM HANDHOLE.
9. BOND AND GROUND COVER AND FRAME TO ROD USING BRAIDED COPPER GROUND STRAP EQUIVALENT AMPACITY TO #6 AWG COPPER WIRE.
10. GRADE THE AREA AROUND THE HANDHOLE 10' IN ALL DIRECTIONS SUCH TO PREVENT WATER AND DIRT ACCUMULATION ACROSS THE TOP OF THE COVER AND ALLOW WATER TO DRAIN AWAY FROM THE HANDHOLE.

WALL ENGINEERING
PO BOX 1457, DURANT, OK 74702
OKLAHOMA CA #5413 EXP. JUNE 30, 2021

SUBMITTAL / REVISIONS:
DATE | BY | SUBMITTAL / REVISION

SHAWNEE MUNICIPAL AUTHORITY
SOUTHSIDE WWTP IMPROVEMENTS
SHAWNEE, OKLAHOMA

ELECTRICAL DETAILS III

PROJECT NO. SHN-20-01
DATE 09/20
DRAWN BY: CD
CHECKED BY: BB
REVIEWED BY: BB
SCALE: AS SHOWN

BAR IS ONE INCH ON ORIGINAL DRAWING
0" 1"
IF NOT ONE INCH ON THIS SHEET, ADJUST SCALES ACCORDINGLY

SHEET
E22

REGISTERED PROFESSIONAL ENGINEER
BRIAN W. BROWN
20995
8-20-2021
OKLAHOMA

BROWN ENGINEERS
501-448-0100

P:\PRODUCTION\PROJECTS\WALL ENGINEERING (WE)\WE-048 SHAWNEE SOUTHSIDE WWTP\DWG\E22_DETAILS III.DWG
3/30/2021 9:59 AM

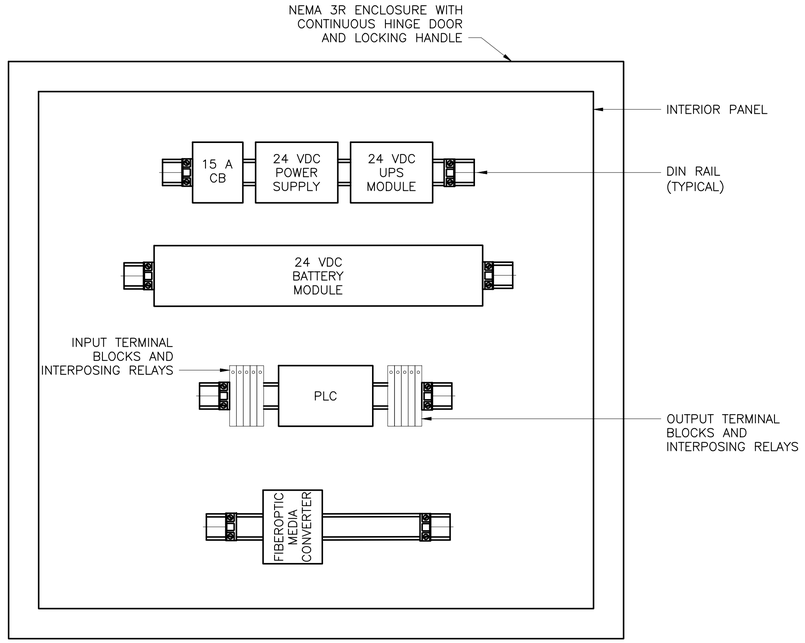

1 — **CONTROL PANEL LAYOUT**
SCALE: NONE

NOTE:

1. 24 VDC POWER SUPPLY SHALL BE SOLA SDN 10-24 OR APPROVED EQUAL.
2. 24 VDC UPS MODULE SHALL BE SOLA SDU 10-24 OR APPROVED EQUAL.
3. 24 VDC BATTERY MODULE SHALL BE SOLA SDU 24-BAT OR APPROVED EQUAL.
4. PLC SHALL BE ALLEN-BRADLEY MICROLOGIX OR APPROVED EQUAL.

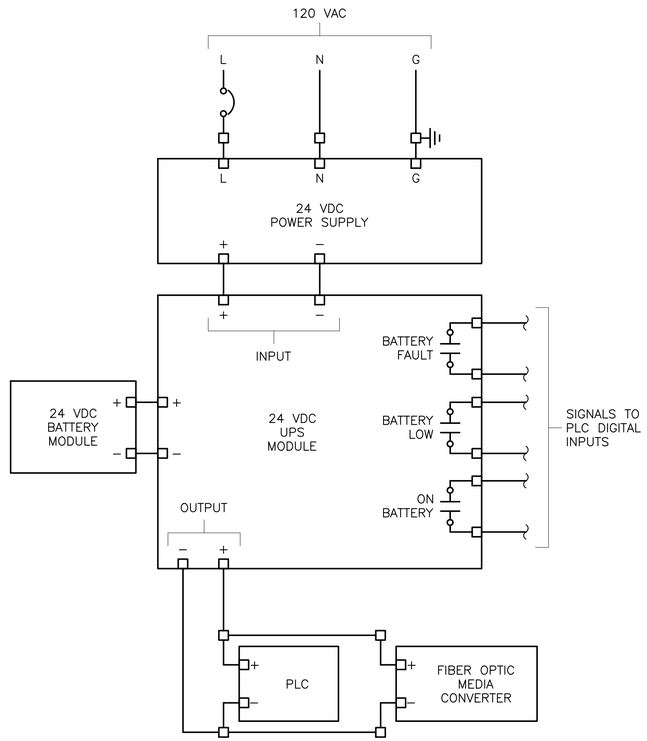

2 — **CONTROL PANEL POWER SUPPLY**
SCALE: NONE

WALL ENGINEERING
PO BOX 1457, DURANT, OK 74702
OKLAHOMA CA #5413 EXP. JUNE 30, 2021

SUBMITTAL / REVISIONS:

DATE	BY	SUBMITTAL / REVISION

SHAWNEE MUNICIPAL AUTHORITY
SOUTHSIDE WWTP IMPROVEMENTS
SHAWNEE, OKLAHOMA

ELECTRICAL DETAILS IV

PROJECT NO. SHN-20-01
DATE 09/20
DRAWN BY: CD
CHECKED BY: BB
REVIEWED BY: BB
SCALE: AS SHOWN

BAR IS ONE INCH ON ORIGINAL DRAWING
0" 1"
IF NOT ONE INCH ON THIS SHEET, ADJUST SCALES ACCORDINGLY

SHEET
E23

REGISTERED PROFESSIONAL ENGINEER
BRUCE W. BROWN
20995
4-20-2021
OKLAHOMA

BROWN ENGINEERS
501-448-0100

P:\PRODUCTION\PROJECTS\WALL ENGINEERING (WE)\WE-048 SHAWNEE SOUTHSIDE WWTP\DWG\E23_DETAILS IV.DWG
3/2/2021 3:19 PM

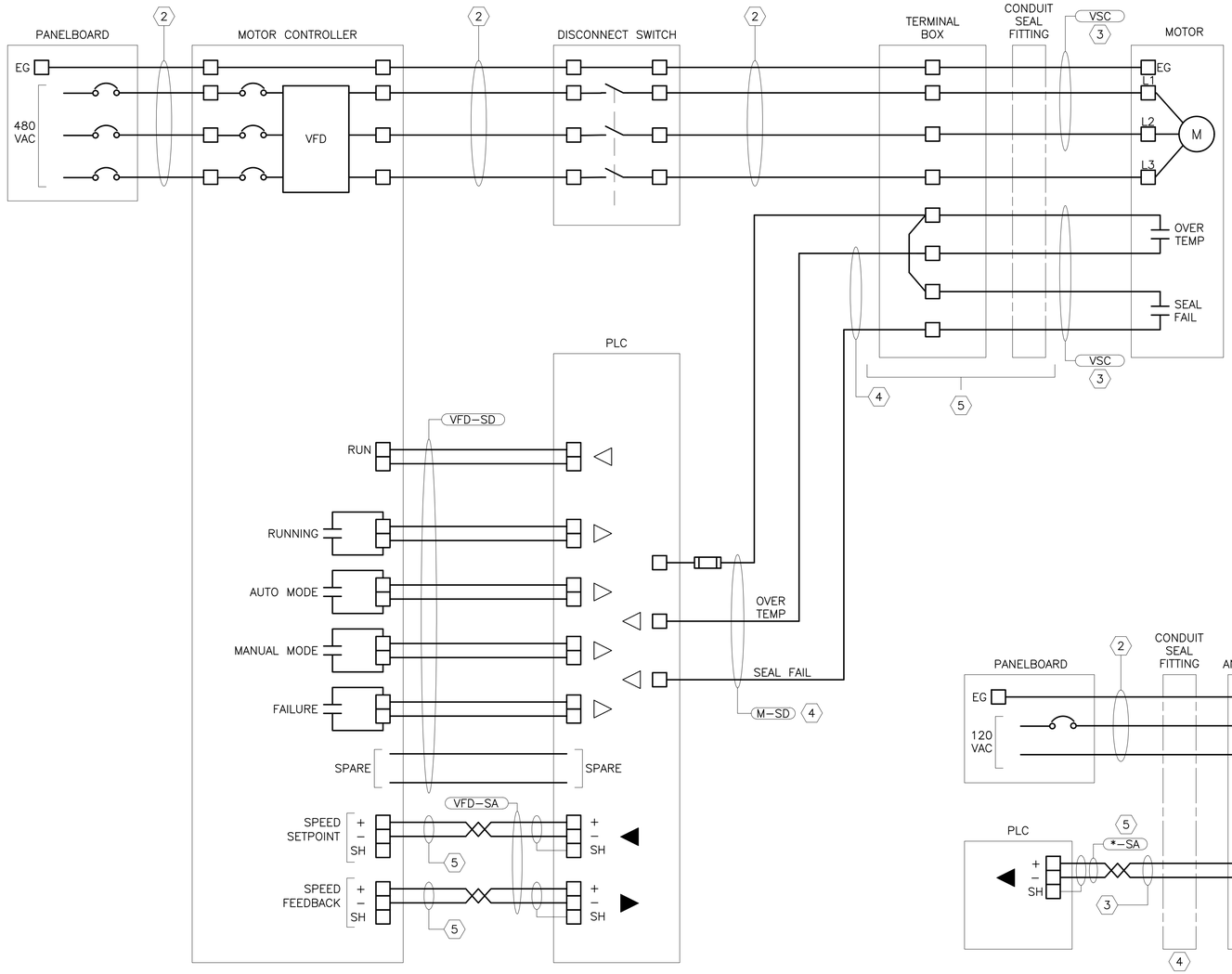

1 — VFD MOTOR CONTROLLER WIRING
SCALE: NONE

VFD MOTOR CONTROLLER NOTES:

1. COORDINATE WIRING AND TERMINATIONS WITH APPROVED EQUIPMENT.
2. SEE PANELBOARD SCHEDULE FOR CIRCUIT IDENTIFICATION.
3. MOTOR SIGNAL WIRING MAY BE IN A SEPARATE CONTROL CABLE OR COMBINED WITH POWER CABLE.
4. SEE CONTROL SYSTEM – ONE–LINE DIAGRAM FOR CIRCUIT.
5. TERMINAL BOX AND SEAL FITTING ARE REQUIRED FOR ALL MOTORS IN HAZARDOUS (CLASSIFIED) LOCATIONS.
6. OVER TEMPERATURE AND SEAL FAILURE WIRING REQUIRED FOR SUBMERSIBLE PUMPS ONLY.

2 — ANALOG INSTRUMENT WIRING
SCALE: NONE

ANALOG INSTRUMENT WIRING NOTES:

1. COORDINATE WIRING AND TERMINATIONS WITH APPROVED EQUIPMENT.
2. SEE PANELBOARD SCHEDULE FOR CIRCUIT IDENTIFICATION. LOOP POWERED ANALOG INSTRUMENTS DO NOT NEED 120 VAC WIRING FROM PANELBOARD.
3. CONNECT ANALOG SIGNAL SHIELD AT PLC END ONLY. INSULATE SHIELD AT FIELD INSTRUMENTS TO PREVENT GROUND LOOP. CALIBRATE ALL ANALOG SIGNALS.
4. SEAL FITTING IS REQUIRED FOR ALL INSTRUMENTS IN HAZARDOUS (CLASSIFIED) LOCATIONS.
5. TYPICAL FOR "FM–SA" AND "LT–SA".

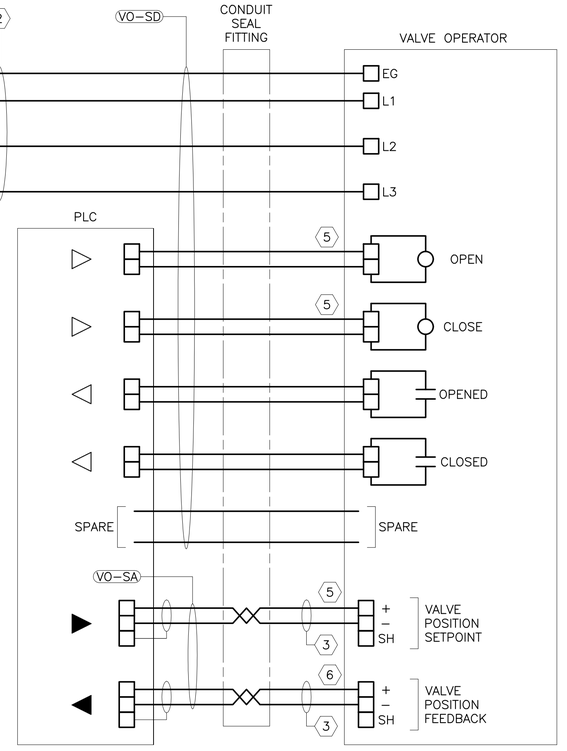

3 — VALVE OPERATOR WIRING
SCALE: NONE

VALVE OPERATOR WIRING NOTES:

1. COORDINATE WIRING AND TERMINATIONS WITH APPROVED EQUIPMENT.
2. SEE PANELBOARD SCHEDULE FOR CIRCUIT IDENTIFICATION.
3. CONNECT ANALOG SIGNAL SHIELD AT PLC END ONLY. INSULATE SHIELD AT FIELD INSTRUMENTS TO PREVENT GROUND LOOP. CALIBRATE ALL ANALOG SIGNALS.
4. SEAL FITTING IS REQUIRED FOR ALL INSTRUMENTS IN HAZARDOUS (CLASSIFIED) LOCATIONS.
5. ANALOG VALVES HAVE SETPOINT SIGNAL, DIGITAL VALVES HAVE OPEN AND CLOSE SIGNALS.
6. ALL VALVES MAY NOT HAVE POSITION FEEDBACK.

WALL ENGINEERING
PO BOX 1457, DURANT, OK 74702
OKLAHOMA CA #5413 EXP. JUNE 30, 2021

SUBMITTAL / REVISIONS:
DATE | BY | SUBMITTAL / REVISION

SHAWNEE MUNICIPAL AUTHORITY
SOUTHSIDE WWTP IMPROVEMENTS
SHAWNEE, OKLAHOMA

ELECTRICAL WIRING DIAGRAMS

PROJECT NO.
SHN-20-01
DATE
09/20
DRAWN BY:
CD
CHECKED BY:
BB
REVIEWED BY:
BB
SCALE:
AS SHOWN

BAR IS ONE INCH ON ORIGINAL DRAWING
0" 1"
IF NOT ONE INCH ON THIS SHEET, ADJUST SCALES ACCORDINGLY

SHEET
E24

REGISTERED PROFESSIONAL ENGINEER
BRUCE W. BROWN
20995
4-20-2021
OKLAHOMA

BROWN ENGINEERS
501-448-0100

P:\PRODUCTION\PROJECTS\WALL ENGINEERING (WE)\WE-048 SHAWNEE SOUTHSIDE WWTP\DWG\E24_WIRING DIAGRAMS.DWG
4/16/2021 2:56 PM

SHAWNEE MUNICIPAL AUTHORITY
WASTEWATER SYSTEM IMPROVEMENTS
CONTRACT DOCUMENTS VOLUME 8 OF 8 – CONVEYANCE
JUNE 2022

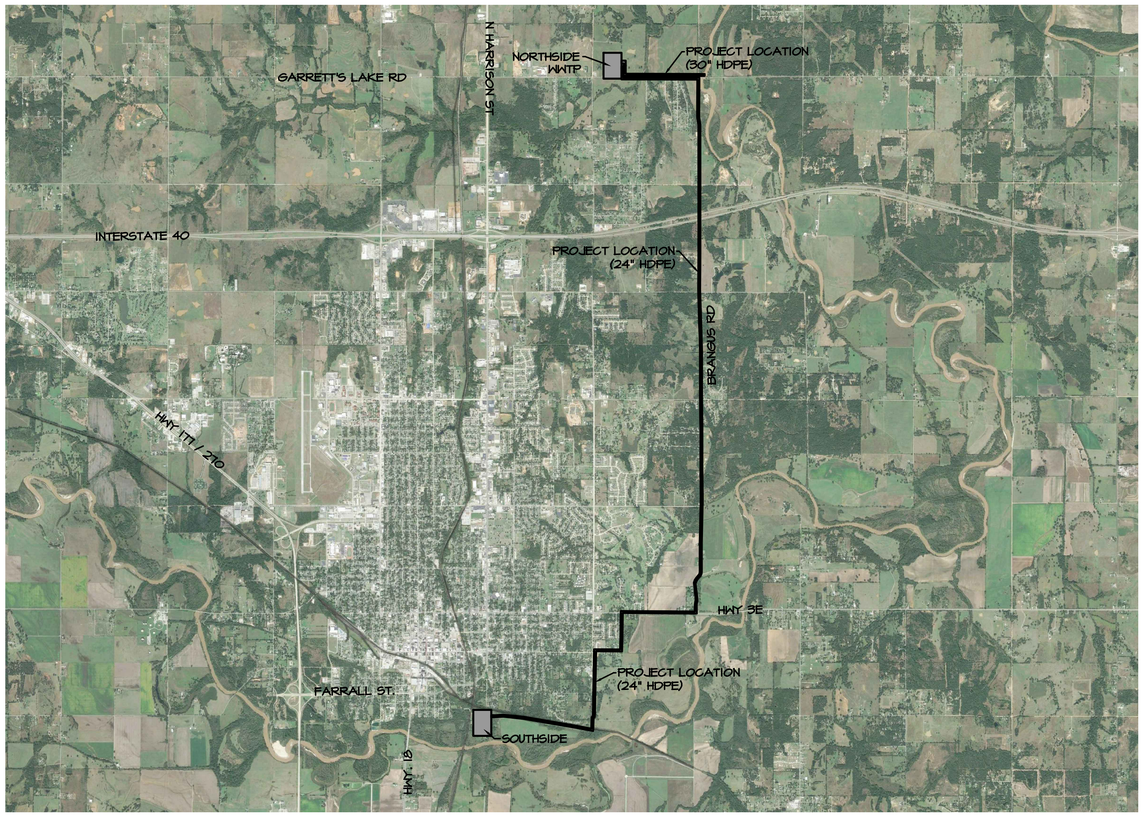

IN COOPORATION WITH OKLAHOMA WATER RESOURCE BOARD
OWRB PROJECT #ORF-20-0018-CWA

BEFORE YOU DIG 1-800-522-6543 CALL OKIE

WALL ENGINEERING

City of Shawnee OKLAHOMA

REGISTERED PROFESSIONAL ENGINEER 6/24/22 BRANDON WALL 21108 OKLAHOMA

WALL ENGINEERING PROJECT# SHN-20-01
223 N. WASHIGNTON, DURANT, OK 74701
(580) 924-1800
OKLAHOMA CERTIFICATE OF AUTHORIZATION #5413
EXPIRATION DATE: JUNE 30, 2023

SHEET INDEX

1	COVER SHEET
2	SHEET INDEX & OVERALL PROJECT LOCATION
2A	GENERAL CONSTRUCTION NOTES
3-38	24" FORCEMAIN PLAN & PROFILES
39-42	30" DISCHARGE FORCEMAIN PLAN & PROFILES
43-44	STANDARD DETAILS

WALL ENGINEERING
223 N. WASHINGTON, DURANT, OK 74701
OKLAHOMA CA #5413 EXP. JUNE 30, 2023

SUBMITTAL / REVISIONS:

DATE	BY	SUBMITTAL / REVISION
03/22	TL	ODEQ SUBMITTAL
06/22	TL	ISSUED FOR BIDDING

SHAWNEE MUNICIPAL AUTHORITY
CONVEYANCE - FORCEMAIN & DISCHARGE
SHAWNEE, OKLAHOMA

SHEET INDEX & OVERALL PROJECT LOCATION

PROJECT NO.
SHN-20-01

DATE
06/22

DRAWN BY:
TL

CHECKED BY:
BW

REVIEWED BY:
DBW

SCALE:
1"=2,000

BAR IS ONE INCH ON ORIGINAL DRAWING
0" 1"
IF NOT ONE INCH ON THIS SHEET, ADJUST SCALES ACCORDINGLY

SHEET
2

REGISTERED PROFESSIONAL ENGINEER
DAVID BRANDON WALL
21108
OKLAHOMA

GENERAL

1. ALL NOTES LISTED ON THIS SHEET APPLY TO ALL SHEETS OF THE DRAWINGS AS IF THEY WERE WRITTEN ON EACH SHEET.
2. CONTRACTOR SHALL NOTIFY OWNER 48 HOURS PRIOR TO CONSTRUCTION.
3. CONTRACTOR SHALL VERIFY ALL EXISTING CONDITIONS AND OBSTRUCTIONS INCLUDING LOCATION AND DIMENSIONS BEFORE STARTING WORK AND SHALL NOTIFY THE ENGINEER OF ANY DISCREPANCIES.
4. PRIOR TO INSTALLATION OF RELEVANT FACILITIES CONTRACTOR SHALL, AT HIS OWN EXPENSE, UNCOVER AND OTHERWISE DETERMINE THE DEPTH OF UTILITIES WHICH, IN HIS OPINION, COULD INTERFERE WITH CONSTRUCTION.
5. ALL DIMENSIONS SHOWN WITH ± SHALL BE CONFIRMED BY THE CONTRACTOR ACCORDING TO ACTUAL FIELD CONDITIONS OR EQUIPMENT/STRUCTURE REQUIREMENTS.
6. ALL MISCELLANEOUS REMOVAL ITEMS REQUIRED FOR CONSTRUCTION SHALL BE FIELD LOCATED BY THE CONTRACTOR PRIOR TO BIDDING. THESE ITEMS WILL NOT BE MEASURED FOR PAYMENT AND SHALL BE INCLUDED IN THE PRICE BID FOR ASSOCIATED ITEMS OF WORK.
7. TRAFFIC CONTROL DEVICES SHALL BE FURNISHED AND MAINTAINED BY THE CONTRACTOR THROUGHOUT THIS PROJECT IN ACCORDANCE WITH THE LATEST VERSION OF THE MANUAL OF UNIFORM TRAFFIC CONTROL DEVICES AND/OR AS REQUIRED BY THE DEPARTMENT OF TRANSPORTATION OR COUNTY PERMITS FOR CONSTRUCTION IN RIGHT-OF-WAY.
8. THE CONTRACTOR SHALL SUBMIT AN EROSION CONTROL PLAN (SWPPP) PRIOR TO CONSTRUCTION AND SHALL MAINTAIN SWPPP THROUGHOUT DURATION OF CONSTRUCTION IN ACCORDANCE WITH SPECIFICATIONS.
9. EXISTING FACILITY AND UTILITY INFORMATION SHOWN ON THE DRAWINGS WAS OBTAINED FROM AVAILABLE RECORDS, LOCATES, AND AVAILABLE FILES. NEITHER THE OWNER NOR THE ENGINEER ASSUMES ANY RESPONSIBILITY FOR FACILITIES AND UTILITIES NOT SHOWN OR NOT IN THE LOCATION SHOWN. THE CONTRACTOR SHALL FIELD VERIFY ALL LOCATIONS, SIZES, MATERIALS, TYPES, AND ELEVATIONS SHOWN AROUND OR NEAR AREAS OF CONSTRUCTION PRIOR TO THE START OF CONSTRUCTION.
10. CONTRACTOR SHALL PERFORM ALL WORK WITHIN DESIGNATED EASEMENTS. CONTRACTOR SHALL NOT ENCROACH OR TRESPASS INTO PRIVATE PROPERTY WITHOUT WRITTEN APPROVAL FROM THE PROPERTY OWNER.
11. MAINTAIN LOCAL AND THROUGH TRAFFIC FOR ALL STREETS AT ALL TIMES WITHOUT CLOSURES OR RESTRICTIONS EXCEPT AS PART OF THE TRAFFIC CONTROL PLAN.
12. MAINTAIN REASONABLE ACCESS TO ALL PROPERTIES AT ALL TIMES. DO NOT RESTRICT DRIVEWAY ACCESS WITHOUT OWNER'S APPROVAL. RESTORE DRIVEWAY ACCESS AT THE END OF EACH DAY. PROVIDE TEMPORARY MEASURES AS NEEDED (SUCH AS GRAVEL) TO MAINTAIN DRIVEWAY ACCESS.
13. CONTRACTOR SHALL KEEP ACCURATE RECORDS OF ALL CONSTRUCTION THAT DEVIATES FROM THE DRAWINGS. THE CONTRACTOR SHALL FURNISH TO THE ENGINEER ACCURATE "AS-BUILT" RED LINE DRAWINGS FOLLOWING COMPLETION OF CONSTRUCTION.
14. CONTRACTOR SHALL TAKE SPECIAL PRECAUTIONS IN THE VICINITY OF ANY OVERHEAD AND UNDERGROUND ELECTRIC LINES. CONTRACTOR SHALL ABIDE BY THE MOST RECENT NATIONAL ELECTRIC CODE FOR WORKING AROUND OVERHEAD ELECTRIC LINES AS WELL AS OTHER LOCAL, STATE OR FEDERALS LAWS / REQUIREMENTS.
15. CONTRACTOR SHALL CONFORM TO ALL APPLICABLE FEDERAL, STATE AND LOCAL LAWS GOVERNING EXCAVATION. TRENCH SIDE SLOPES SHALL MEET OSHA REQUIREMENTS THAT ARE IN EFFECT AT THE TIME OF CONSTRUCTION. CONTRACTOR SHALL SUBMIT A TRENCH SAFETY PLAN PRIOR TO CONSTRUCTION.
16. THIS PROJECT IS SUBJECT TO AMERICAN IRON AND STEEL (AIS) REQUIREMENTS. ALL IRON AND STEEL PRODUCTS FOR CONSTRUCTION, ALTERATION, MAINTENANCE, OR REPAIRS INCORPORATED MUST BE PRODUCED IN THE UNITED STATES.
17. CONTRACTOR TO PROVIDE DUST CONTROL AT ALL TIMES DURING CONSTRUCTION.
18. ANY WORK PERFORMED WITHOUT THE KNOWLEDGE OF THE ENGINEER, INSPECTOR OR OWNER'S REPRESENTATIVE IS SUBJECT TO REMOVAL AND REPLACEMENT AT THE CONTRACTOR'S EXPENSE.

EARTHWORK

1. ALL COMPACTED SUBGRADE AND BASE NOT ACCESSIBLE TO MECHANICAL COMPACTION EQUIPMENT SHALL BE HAND COMPACTED USING WHACKER PACKERS.
2. SUBGRADE PREPARATION FOR ALL STRUCTURES AND BUILDINGS ON DRAWINGS SHALL BE AS FOLLOWS: OVER-EXCAVATE 30 INCHES BELOW BASE OF CONCRETE, SCARIFY AND COMPACT TOP 12", COMPACT TO 95% STANDARD PROCTOR DENSITY, INSTALL NON-WOVEN NEEDLE PUNCHED GEOTEXTILE FABRIC, INSTALL 30 INCHES OF CRUSHER RUN AGGREGATE BASE IN 10" LIFTS, COMPACT TO 95% MODIFIED PROCTOR DENSITY. BASE OF CONCRETE SHALL BE CONSIDERED THE BOTTOM OF SLAB AND NOT THE BASE OF FOOTINGS/STEM WALLS. OVER EXCAVATION MAY BE DELETED WHERE ROCK IS PRESENT. #57 ROCK SHALL BE SUBSTITUTED FOR AGG BASE WHERE GROUNDWATER IS PRESENT. ALL FILL MATERIAL REQUIRED TO ACHIEVE FINAL GRADE BELOW THE 30" ROCK LAYER SHALL BE CONSTRUCTED WITH ONSITE OR IMPORTED FILL MATERIAL COMPACTED TO 95% STANDARD PROCTOR DENSITY.
3. ELEVATIONS GIVEN ARE FINISHED GRADE UNLESS OTHERWISE NOTED.
4. NO FIRES WILL BE ALLOWED UNLESS OTHERWISE NOTED. TREES AND BRUSH SHALL BE REMOVED AND DISPOSED OF OFF SITE.
5. NO BLASTING WILL BE ALLOWED.
6. ALL SURFACE DRAINAGE IMPACTED SHALL BE RESTORED TO AS GOOD OR BETTER CONDITION.
7. ALL DISTURBED AREAS SHALL BE LEFT FREE OF RUTS AND TRACKS AND SHALL BE FULLY GRADED TO DRAIN.

GRASSING

1. ANY AND ALL DISTURBED AREAS SHALL BE TOPSOILED, HYDROMULCHED, AND WATERED. ANY AND ALL DISTURBED IMPROVE/RESIDENTIAL AREAS SHALL BE SOLID SLAB SODDED PER SPECIFICATIONS & WATERED UNTIL ESTABLISHED.

PIPING & APPURTENANCES

1. ALL PIPING THAT CROSS VERTICALLY SHALL HAVE AT LEAST 6" SEPARATION.
2. CONTRACTOR SHALL BE RESPONSIBLE FOR MAINTAINING THE REQUIRED 10 FOOT HORIZONTAL AND 2 FOOT VERTICAL SEPARATION BETWEEN SANITARY SEWER AND POTABLE WATER MAINS. ALL OTHER PIPING SHALL MAINTAIN A MINIMUM OF 5' SEPARATION.
3. CONTRACTOR SHALL SCHEDULE AND CONDUCT OPERATIONS TO LIMIT AMOUNT OF TRENCH OPENED TO INCLUDE ONLY THAT WHICH MAY BE COVERED IN 2 (TWO) DAYS TIME TO A MAXIMUM OF 200'. ANY TRENCH LEFT OPEN OVERNIGHT SHALL BE BARRICADED AND PROTECTED AS DETAILED IN THE MOST CURRENT EDITION OF THE MANUAL OF UNIFORM TRAFFIC CONTROL DEVICES.
4. MATERIAL EXCAVATED FROM TRENCH & PIPE BEDDING MATERIALS SHALL NOT BE PLACED ON ADJACENT ASPHALT OR CONCRETE PAVING.
5. A SILT AND VARMINT CAP AND/OR PLUG SHALL BE IN PLACE ON THE OPEN END OF PIPES AT ALL TIMES.
6. DO NOT EXCEED 75% OF MANUFACTURE'S RECOMMENDED MAXIMUM DEFLECTION FOR PIPE JOINTS UNLESS OTHERWISE NOTED.
7. THE CONTRACTOR SHALL INSTALL TEMPORARY FENCES TO PROTECT HORSES AND LIVESTOCK WHEN NECESSARY.
8. REMOVAL AND REPLACEMENT OF STREET TRAFFIC SIGNS, MAIL BOXES AND OTHER STRUCTURES BY THE CONTRACTOR TO FACILITATE CONSTRUCTION SHALL BE CONSIDERED INCIDENTAL AND BE INCLUDED IN THE PRICE BID.
9. ALL EXISTING PAVMENT TO REMAIN SHALL BE SAWCUT TO ENSURE A STRAIGHT SMOOTH SURFACE. ALL CUTS MADE IN DRIVEWAYS OR OTHER PAVEMENTS SHALL BE MADE IN STRAIGHT PERPENDICULAR LINES. COST TO BE CONSIDERED SUBSIDIARY TO CONTRACTOR'S BID.
10. INSTALL TRACER TAPE ON ALL PIPING INSTALLED IN ACCORDANCE WITH SPECIFICATIONS.
11. BONE EXTENTS ARE APPROXIMATE ONLY. FIELD VERIFY ACTUAL REQUIRED FOOTAGES & ASSOCIATED ITEMS PRIOR TO BID.
12. CONTRACTOR MAY ELECT TO BORE ANY AREAS SCHEDULES FOR OPEN CUT. SURFACE REPAIR MAY BE REMOVED WHEN/IF BORING IS USED.
13. CONTRACTOR MAY ELECT TO OPEN CUT ANY AREAS SCHEDULED FOR BORING WITH THE EXCEPTION ON RAILROAD & ROADWAY CROSSINGS WHERE BORING IS CALLED OUT.

ASPHALT

1. ALL ASPHALT SHALL CONFORM WITH OKLAHOMA DEPARTMENT OF TRANSPORTATION STANDARD SPECIFICATIONS FOR HIGHWAY CONSTRUCTION, 2019 EDITION.



WALL ENGINEERING
223 N. WASHINGTON, DURANT, OK 74701
OKLAHOMA CA #5413 EXP. JUNE 30, 2023

SUBMITTAL / REVISIONS:

DATE	BY	SUBMITTAL / REVISION
03/22	TL	ODEQ SUBMITTAL
06/22	TL	ISSUED FOR BIDDING

SHAWNEE MUNICIPAL AUTHORITY
CONVEYANCE - FORCEMAIN & DISCHARGE
SHAWNEE, OKLAHOMA

GENERAL CONSTRUCTION NOTES

PROJECT NO.
SHN-20-01

DATE
06/22

DRAWN BY:
TL

CHECKED BY:
BW

REVIEWED BY:
DBW

SCALE:
NOT TO SCALE

BAR IS ONE INCH ON ORIGINAL DRAWING
0" 1"
IF NOT ONE INCH ON THIS SHEET, ADJUST SCALES ACCORDINGLY

SHEET
2A

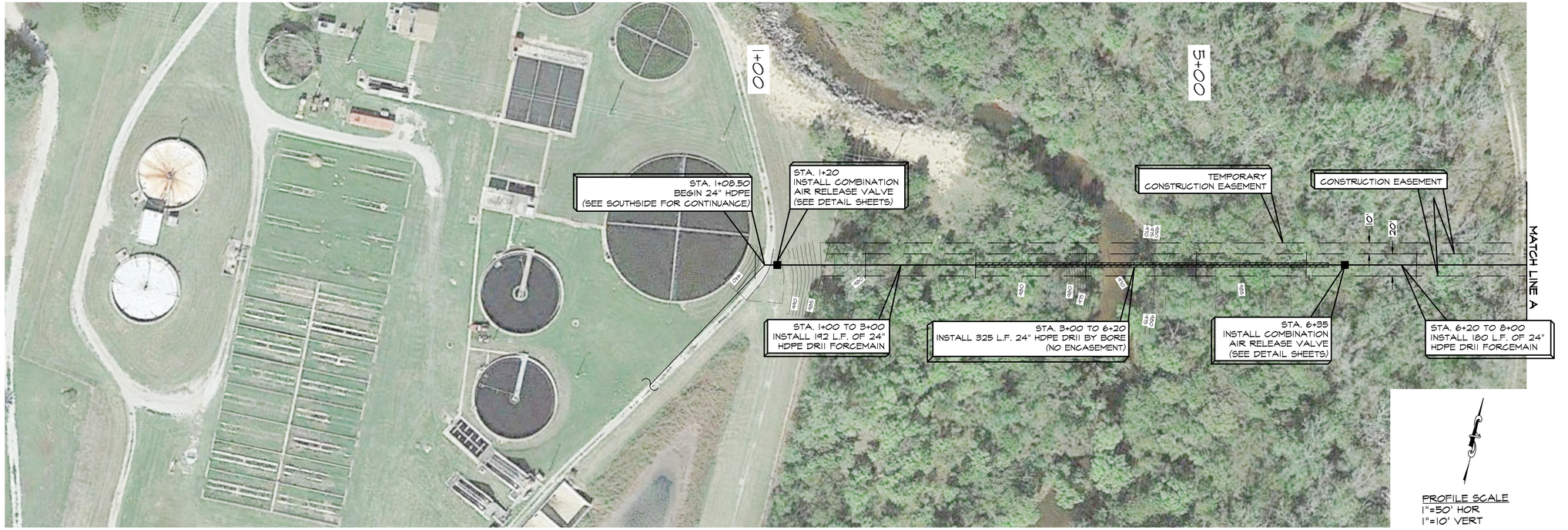

PROFILE SCALE
1"=50' HOR
1"=10' VERT

LEGEND

- PROPOSED 24" FORCEMAIN
- PROPOSED BORE
- OPTIONAL BORE
- PROPOSED REMOVE/REPLACE (SEE QUANTITIES)
- EXISTING CONTOUR LINES
- EXISTING WATER LINE
- EXISTING ELECTRIC LINE
- EXISTING SEWER LINE
- EXISTING GAS LINE
- EXISTING TELEPHONE LINE
- EXISTING RIGHT-OF-WAY
- SUBSURFACE UTILITY ENGINEERING (CRITICAL LOCATE AREA)
- PROPOSED COMBINATION ARV
- EXISTING SIGN
- EXISTING MAILBOX
- EXISTING WATER METER
- EXISTING FIRE HYDRANT
- EXISTING GATE VALVE
- EXISTING POWER POLE
- EXISTING LIGHT POLE
- EXISTING GUY
- EXISTING MANHOLE
- EXISTING GAS METER
- EXISTING TPED
- EXISTING TREE

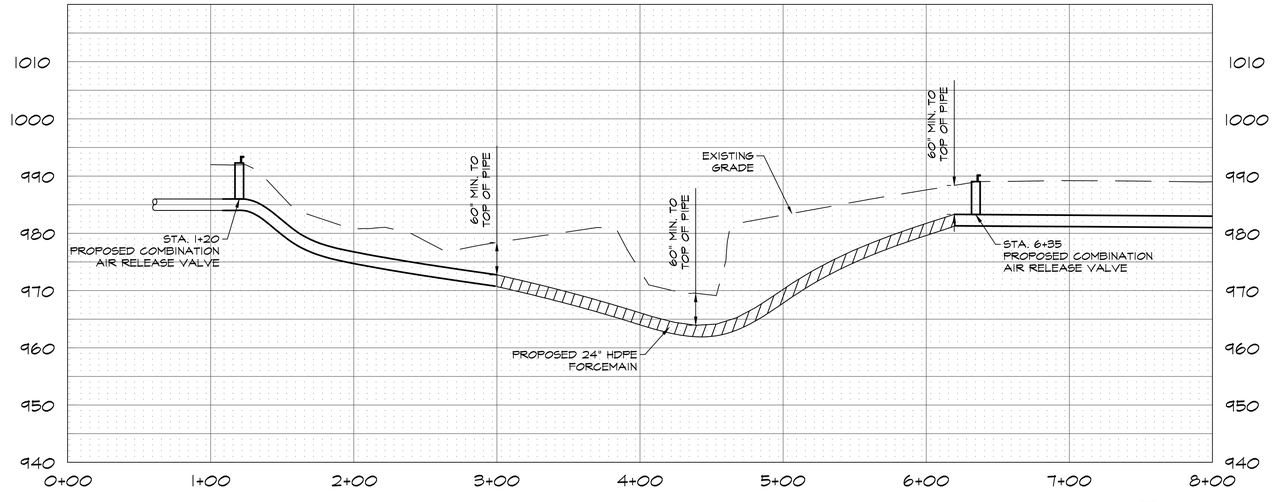

REGISTERED PROFESSIONAL ENGINEER
6/23/22
BRANDON WALL
21108
OKLAHOMA

WALL ENGINEERING
223 N. WASHINGTON, DURANT, OK 74701
OKLAHOMA CA #5413 EXP. JUNE 30, 2023

SUBMITTAL / REVISIONS:

DATE	BY	SUBMITTAL / REVISION
03/22	TL	ODEQ SUBMITTAL
06/22	TL	ISSUED FOR BIDDING

SHAWNEE MUNICIPAL AUTHORITY
CONVEYANCE - FORCEMAIN & DISCHARGE
SHAWNEE, OKLAHOMA

24" FORCEMAIN PLAN & PROFILE
STA. 1+00 TO 8+00

PROJECT NO.
SHN-20-01
DATE
06/22
DRAWN BY:
TL
CHECKED BY:
BW
REVIEWED BY:
DBW
SCALE:
1"=50'

BAR IS ONE INCH ON ORIGINAL DRAWING
0" 1"
IF NOT ONE INCH ON THIS SHEET, ADJUST SCALES ACCORDINGLY

SHEET
3



PROFILE SCALE
1"=50' HOR
1"=10' VERT

LEGEND

- PROPOSED 24" FORCEMAIN
- PROPOSED BORE
- OPTIONAL BORE
- PROPOSED REMOVE/REPLACE (SEE QUANTITIES)
- XXX — EXISTING CONTOUR LINES
- W — EXISTING WATER LINE
- OHE — EXISTING ELECTRIC LINE
- SS — EXISTING SEWER LINE
- G — EXISTING GAS LINE
- TUG — EXISTING TELEPHONE LINE
- EXISTING RIGHT-OF-WAY
- SUE — SUBSURFACE UTILITY ENGINEERING (CRITICAL LOCATE AREA)
- PROPOSED COMBINATION ARV
- EXISTING SIGN
- MB — EXISTING MAILBOX
- WM — EXISTING WATER METER
- EXISTING FIRE HYDRANT
- EXISTING GATE VALVE
- EXISTING POWER POLE
- EXISTING LIGHT POLE
- EXISTING GUY
- S — EXISTING MANHOLE
- G — EXISTING GAS METER
- T — EXISTING TPED
- EXISTING TREE

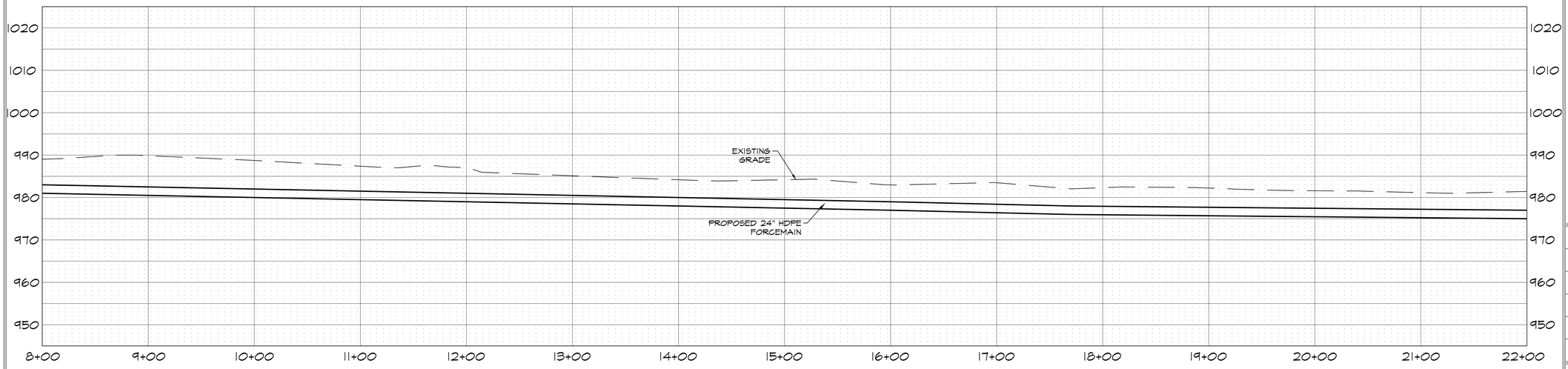

REGISTERED PROFESSIONAL ENGINEER
BRANDON WALL
21108
OKLAHOMA

WALL ENGINEERING
223 N. WASHINGTON, DURANT, OK 74701
OKLAHOMA CA #5413 EXP. JUNE 30, 2023

SUBMITTAL / REVISIONS:

DATE	BY	SUBMITTAL / REVISION
03/22	TL	ODEQ SUBMITTAL
06/22	TL	ISSUED FOR BIDDING

SHAWNEE MUNICIPAL AUTHORITY
CONVEYANCE - FORCEMAIN & DISCHARGE
SHAWNEE, OKLAHOMA

24" FORCEMAIN PLAN & PROFILE
STA. 8+00 TO 22+00

PROJECT NO.
SHN-20-01
DATE
06/22
DRAWN BY:
TL
CHECKED BY:
BW
REVIEWED BY:
DBW
SCALE:
1"=50'

BAR IS ONE INCH ON ORIGINAL DRAWING
0" 1"
IF NOT ONE INCH ON THIS SHEET, ADJUST SCALES ACCORDINGLY

SHEET
4



LEGEND

- PROPOSED 24" FORCEMAIN
- PROPOSED BORE
- OPTIONAL BORE
- PROPOSED REMOVE/REPLACE (SEE QUANTITIES)
- XXX — EXISTING CONTOUR LINES
- W — EXISTING WATER LINE
- OHE — EXISTING ELECTRIC LINE
- SS — EXISTING SEWER LINE
- G — EXISTING GAS LINE
- TUG — EXISTING TELEPHONE LINE
- EXISTING RIGHT-OF-WAY
- SUE — SUBSURFACE UTILITY ENGINEERING (CRITICAL LOCATE AREA)
- PROPOSED COMBINATION ARV
- EXISTING SIGN
- MB — EXISTING MAILBOX
- WM — EXISTING WATER METER
- EXISTING FIRE HYDRANT
- EXISTING GATE VALVE
- EXISTING POWER POLE
- EXISTING LIGHT POLE
- EXISTING GUY
- S — EXISTING MANHOLE
- G — EXISTING GAS METER
- T — EXISTING TPED
- EXISTING TREE

PROFILE SCALE
1"=50' HOR
1"=10' VERT

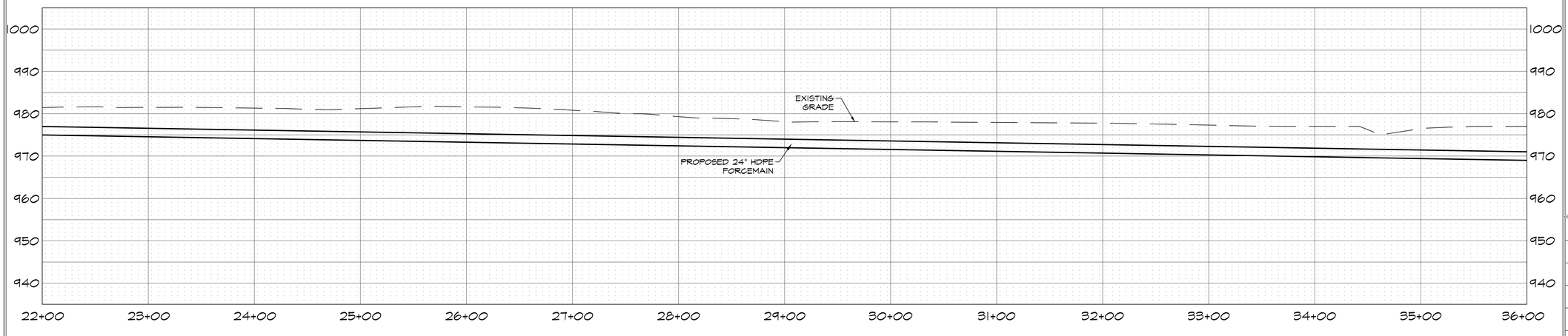

REGISTERED PROFESSIONAL ENGINEER
6/23/22
BRANDON WALL
21108
OKLAHOMA

WALL ENGINEERING
223 N. WASHINGTON, DURANT, OK 74701
OKLAHOMA CA #5413 EXP. JUNE 30, 2023

SUBMITTAL / REVISIONS:

DATE	BY	SUBMITTAL / REVISION
03/22	TL	ODEQ SUBMITTAL
06/22	TL	ISSUED FOR BIDDING

SHAWNEE MUNICIPAL AUTHORITY
CONVEYANCE - FORCEMAIN & DISCHARGE
SHAWNEE, OKLAHOMA

24" FORCEMAIN PLAN & PROFILE
STA. 22+00 TO 36+00

PROJECT NO.
SHN-20-01
DATE
06/22
DRAWN BY:
TL
CHECKED BY:
BW
REVIEWED BY:
DBW
SCALE:
1"=50'

BAR IS ONE INCH ON ORIGINAL DRAWING
0" 1"
IF NOT ONE INCH ON THIS SHEET, ADJUST SCALES ACCORDINGLY

SHEET
5

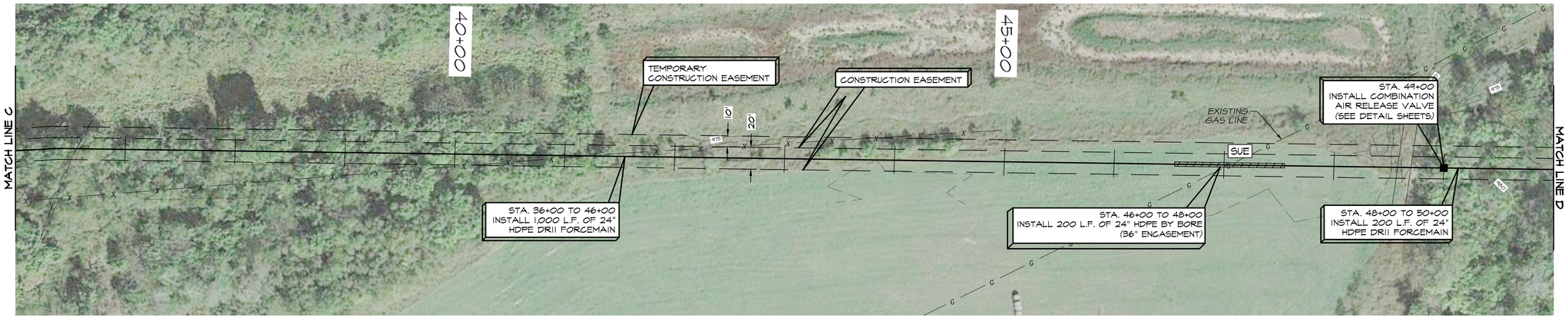

LEGEND

- PROPOSED 24" FORCEMAIN
- PROPOSED BORE
- OPTIONAL BORE
- PROPOSED REMOVE/REPLACE (SEE QUANTITIES)
- XXX — EXISTING CONTOUR LINES
- W — EXISTING WATER LINE
- OHE — EXISTING ELECTRIC LINE
- SS — EXISTING SEWER LINE
- G — EXISTING GAS LINE
- TUG — EXISTING TELEPHONE LINE
- EXISTING RIGHT-OF-WAY
- SUE — SUBSURFACE UTILITY ENGINEERING (CRITICAL LOCATE AREA)
- PROPOSED COMBINATION ARV
- EXISTING SIGN
- EXISTING MAILBOX
- EXISTING WATER METER
- EXISTING FIRE HYDRANT
- EXISTING GATE VALVE
- EXISTING POWER POLE
- EXISTING LIGHT POLE
- EXISTING GUY
- EXISTING MANHOLE
- EXISTING GAS METER
- EXISTING TPED
- EXISTING TREE

PROFILE SCALE
1"=50' HOR
1"=10' VERT

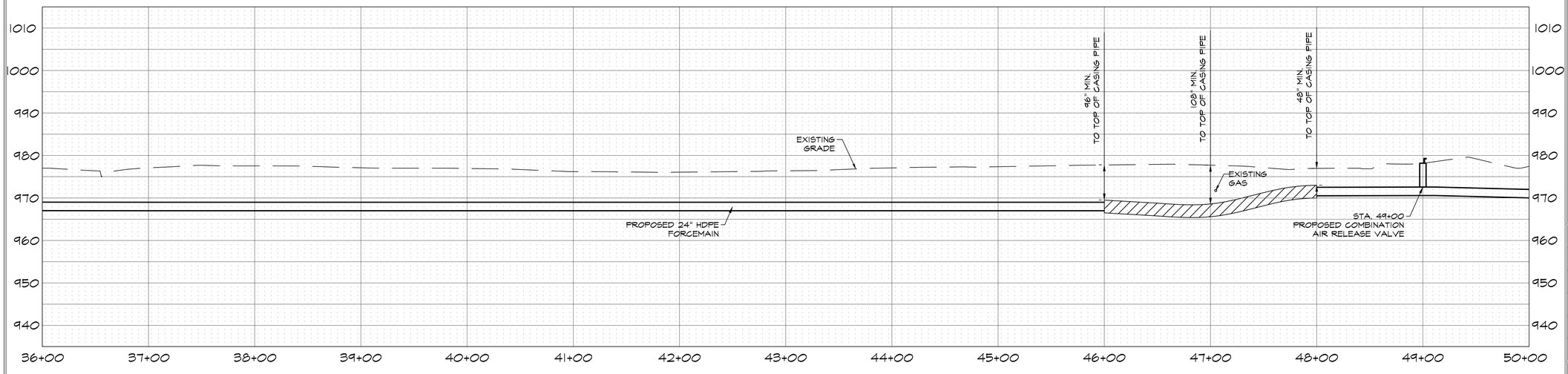

REGISTERED PROFESSIONAL ENGINEER
6/23/22
BRANDON WALL
21108
OKLAHOMA

WALL ENGINEERING
223 N. WASHINGTON, DURANT, OK 74701
OKLAHOMA CA #5413 EXP. JUNE 30, 2023

SUBMITTAL / REVISIONS:

DATE	BY	SUBMITTAL / REVISION
03/22	TL	ODEQ SUBMITTAL
06/22	TL	ISSUED FOR BIDDING

SHAWNEE MUNICIPAL AUTHORITY
CONVEYANCE - FORCEMAIN & DISCHARGE
SHAWNEE, OKLAHOMA

24" FORCEMAIN PLAN & PROFILE
STA. 36+00 TO 50+00

PROJECT NO.	SHN-20-01
DATE	06/22
DRAWN BY:	TL
CHECKED BY:	BW
REVIEWED BY:	DBW
SCALE:	1"=50'

BAR IS ONE INCH ON ORIGINAL DRAWING
0" 1"
IF NOT ONE INCH ON THIS SHEET, ADJUST SCALES ACCORDINGLY

SHEET
6

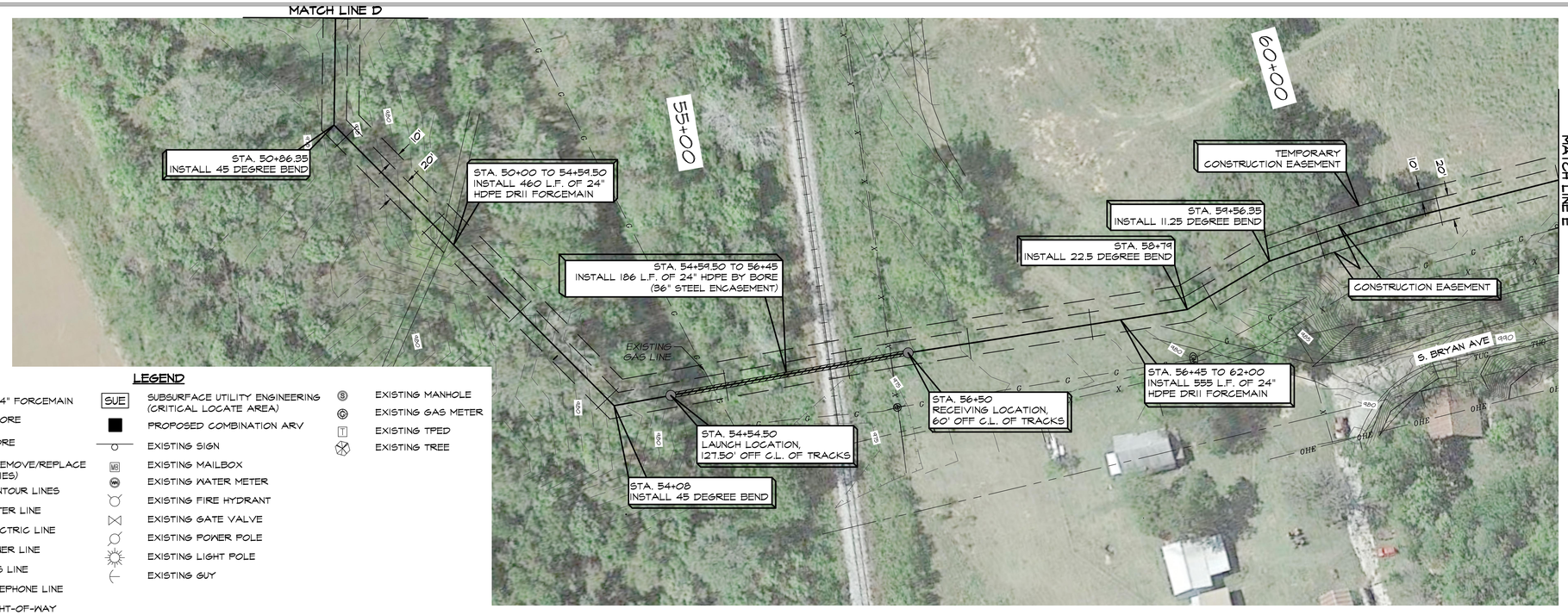

PROFILE SCALE
1"=50' HOR
1"=10' VERT

LEGEND

- PROPOSED 24" FORCEMAIN
- PROPOSED BORE
- OPTIONAL BORE
- PROPOSED REMOVE/REPLACE (SEE QUANTITIES)
- XXX EXISTING CONTOUR LINES
- W EXISTING WATER LINE
- OHE EXISTING ELECTRIC LINE
- SS EXISTING SEWER LINE
- G EXISTING GAS LINE
- TUG EXISTING TELEPHONE LINE
- EXISTING RIGHT-OF-WAY
- SUE SUBSURFACE UTILITY ENGINEERING (CRITICAL LOCATE AREA)
- PROPOSED COMBINATION ARV
- EXISTING SIGN
- MB EXISTING MAILBOX
- EXISTING WATER METER
- EXISTING FIRE HYDRANT
- EXISTING GATE VALVE
- EXISTING POWER POLE
- EXISTING LIGHT POLE
- EXISTING GUY
- S EXISTING MANHOLE
- G EXISTING GAS METER
- T EXISTING TPED
- EXISTING TREE

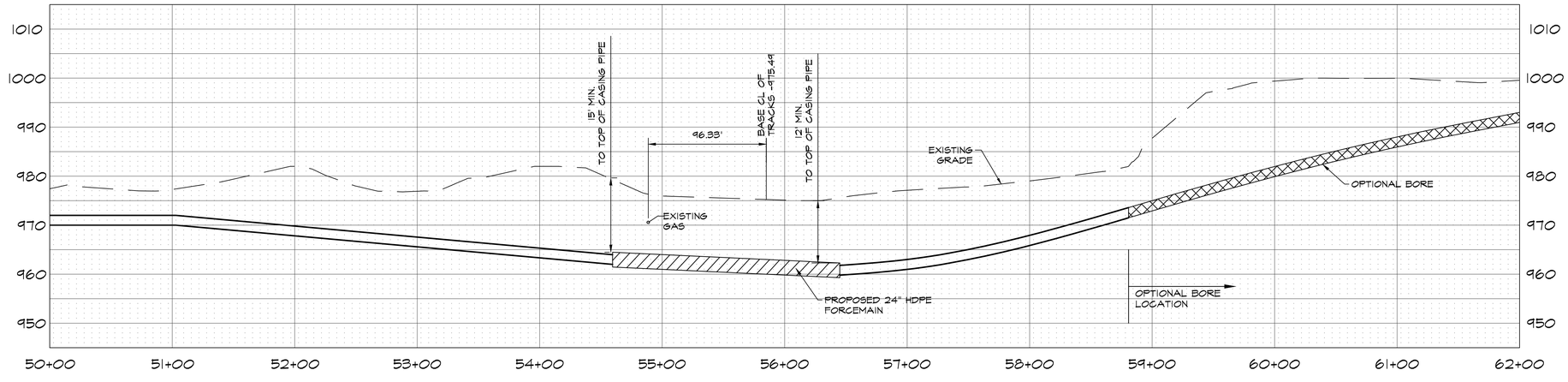

REGISTERED PROFESSIONAL ENGINEER
6/23/22
BRANDON
WALL
21108
OKLAHOMA

WALL ENGINEERING
223 N. WASHINGTON, DURANT, OK 74701
OKLAHOMA CA #5413 EXP. JUNE 30, 2023

SUBMITTAL / REVISIONS:

DATE	BY	SUBMITTAL / REVISION
03/22	TL	ODEQ SUBMITTAL
06/22	TL	ISSUED FOR BIDDING

SHAWNEE MUNICIPAL AUTHORITY
CONVEYANCE - FORCEMAIN & DISCHARGE
SHAWNEE, OKLAHOMA

24" FORCEMAIN PLAN & PROFILE
STA. 50+00 TO 61+50

PROJECT NO.
SHN-20-01
DATE
06/22
DRAWN BY:
TL
CHECKED BY:
BW
REVIEWED BY:
DBW
SCALE:
1"=50'

BAR IS ONE INCH ON ORIGINAL DRAWING
0" 1"
IF NOT ONE INCH ON THIS SHEET, ADJUST SCALES ACCORDINGLY

SHEET
7

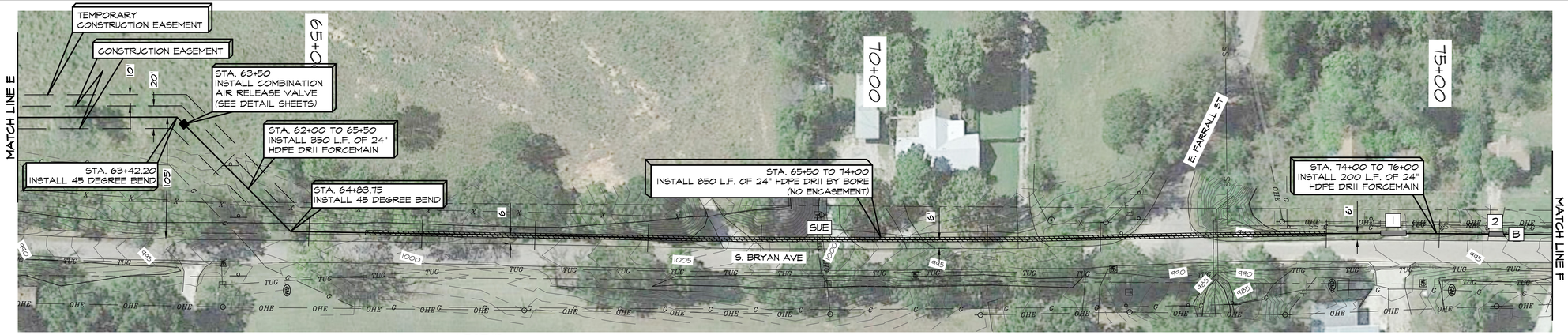

LEGEND

- PROPOSED 24" FORCEMAIN
- PROPOSED BORE
- OPTIONAL BORE
- PROPOSED REMOVE/REPLACE (SEE QUANTITIES)
- XXX — EXISTING CONTOUR LINES
- W — EXISTING WATER LINE
- OHE — EXISTING ELECTRIC LINE
- SS — EXISTING SEWER LINE
- G — EXISTING GAS LINE
- TUG — EXISTING TELEPHONE LINE
- EXISTING RIGHT-OF-WAY
- SUE — SUBSURFACE UTILITY ENGINEERING (CRITICAL LOCATE AREA)
- PROPOSED COMBINATION ARV
- EXISTING SIGN
- MB — EXISTING MAILBOX
- WM — EXISTING WATER METER
- EXISTING FIRE HYDRANT
- EXISTING GATE VALVE
- EXISTING POWER POLE
- EXISTING LIGHT POLE
- EXISTING GUY
- S — EXISTING MANHOLE
- G — EXISTING GAS METER
- T — EXISTING TPED
- EXISTING TREE

PROFILE SCALE
1"=50' HOR
1"=10' VERT

REMOVE & REPLACE QUANTITIES				
SYM.	GRAVEL	CULVERT	CULVERT LENGTH	MAILBOXES
1		12" STL	23 L.F.	
2	13 L.F.	12" RCP	23 L.F.	
B				1

NOTES:
1. QUANTITIES LISTED REPRESENT AN APPROXIMATION OF THE LINEAR FEET OF REMOVE AND REPLACE REQUIRED. IT IS THE CONTRACTORS RESPONSIBILITY TO DETERMINE THE WIDTH AND CORRESPONDING ACTUAL QUANTITIES REQUIRED.
2. SEE DETAILS SHEETS FOR TYPICAL SECTIONS.
3. CULVERT REPLACEMENT INCLUDES LIKE-KIND END SECTIONS WHERE PRESENT. FIELD VERIFY PRIOR TO BID.
4. SIGN AND MAILBOX FINAL LOCATION TO BE FIELD DETERMINED.
5. ALL COSTS TO BE INCLUDED IN "SEWERMAIN RESTORATION" BID ITEM.

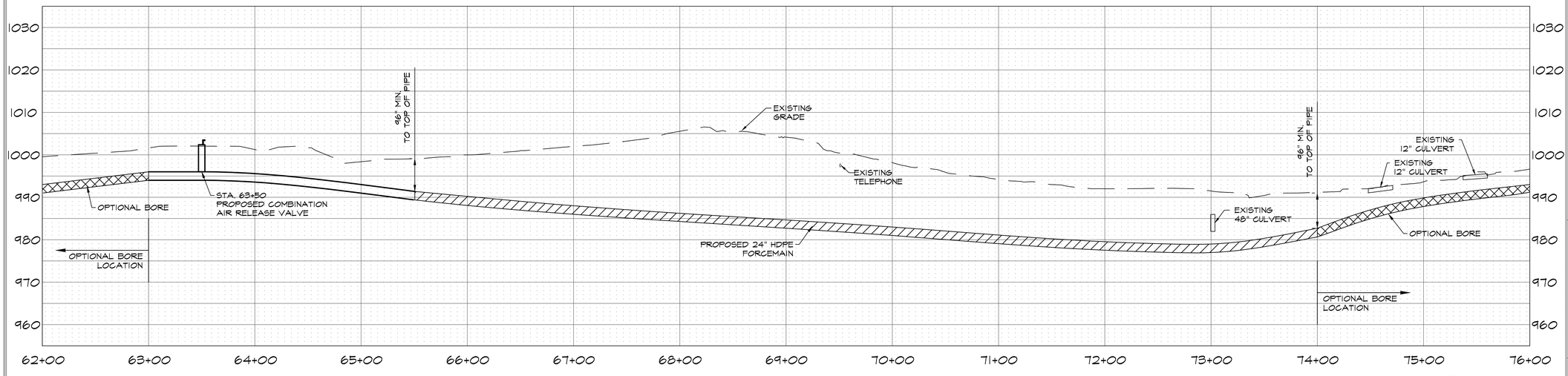

REGISTERED PROFESSIONAL ENGINEER
06/23/22
BRANDON WALL
21108
OKLAHOMA

WALL ENGINEERING
223 N. WASHINGTON, DURANT, OK 74701
OKLAHOMA CA #5413 EXP. JUNE 30, 2023

SUBMITTAL / REVISIONS:

DATE	BY	SUBMITTAL / REVISION
03/22	TL	ODEQ SUBMITTAL
06/22	TL	ISSUED FOR BIDDING

SHAWNEE MUNICIPAL AUTHORITY
CONVEYANCE - FORCEMAIN & DISCHARGE
SHAWNEE, OKLAHOMA

24" FORCEMAIN PLAN & PROFILE
STA. 61+50 TO 76+00

PROJECT NO.
SHN-20-01
DATE
06/22
DRAWN BY:
TL
CHECKED BY:
BW
REVIEWED BY:
DBW
SCALE:
1"=50'

BAR IS ONE INCH ON ORIGINAL DRAWING
0" 1"
IF NOT ONE INCH ON THIS SHEET, ADJUST SCALES ACCORDINGLY

SHEET
8

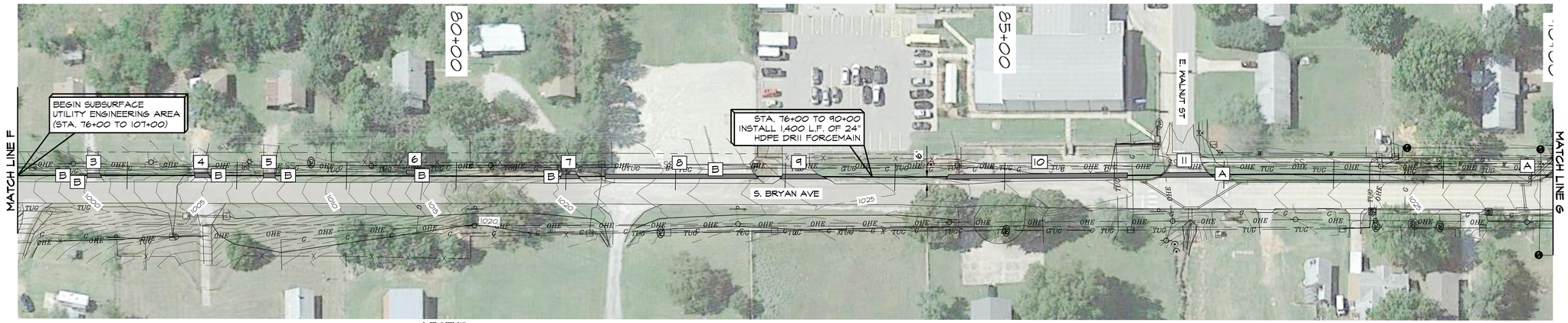

LEGEND

- PROPOSED 24" FORCEMAIN
- PROPOSED BORE
- OPTIONAL BORE
- PROPOSED REMOVE/REPLACE (SEE QUANTITIES)
- XXX EXISTING CONTOUR LINES
- W EXISTING WATER LINE
- OHE EXISTING ELECTRIC LINE
- SS EXISTING SEWER LINE
- G EXISTING GAS LINE
- TUG EXISTING TELEPHONE LINE
- EXISTING RIGHT-OF-WAY

- SUE SUBSURFACE UTILITY ENGINEERING (CRITICAL LOCATE AREA)
- PROPOSED COMBINATION ARV
- EXISTING SIGN
- EXISTING MAILBOX
- EXISTING WATER METER
- EXISTING FIRE HYDRANT
- EXISTING GATE VALVE
- EXISTING POWER POLE
- EXISTING LIGHT POLE
- EXISTING GUY

- EXISTING MANHOLE
- EXISTING GAS METER
- EXISTING TPED
- EXISTING TREE

PROFILE SCALE
1"=50' HOR
1"=10' VERT

REMOVE & REPLACE QUANTITIES						
SYM.	GRAVEL	ASPHALT	CULVERT	CULVERT LENGTH	SIGNS	MAILBOXES
3	12 L.F.		12" CMP	23 L.F.		
4	13 L.F.		12" RCP	23 L.F.		
5	11 L.F.		12" RCP	23 L.F.		
6			12" RCP	8 L.F.		
7	15 L.F.		12" CMP	23 L.F.		
8	138 L.F.					
9		37 L.F.				
10	165 L.F.					
11		45 L.F.				
A					2	
B						7

NOTES:
1. QUANTITIES LISTED REPRESENT AN APPROXIMATION OF THE LINEAR FEET OF REMOVE AND REPLACE REQUIRED. IT IS THE CONTRACTORS RESPONSIBILITY TO DETERMINE THE WIDTH AND CORRESPONDING ACTUAL QUANTITIES REQUIRED.
2. SEE DETAILS SHEETS FOR TYPICAL SECTIONS.
3. CULVERT REPLACEMENT INCLUDES LIKE-KIND END SECTIONS WHERE PRESENT. FIELD VERIFY PRIOR TO BID.
4. SIGN AND MAILBOX FINAL LOCATION TO BE FIELD DETERMINED.
5. ALL COSTS TO BE INCLUDED IN "SEWERMAIN RESTORATION" BID ITEM.

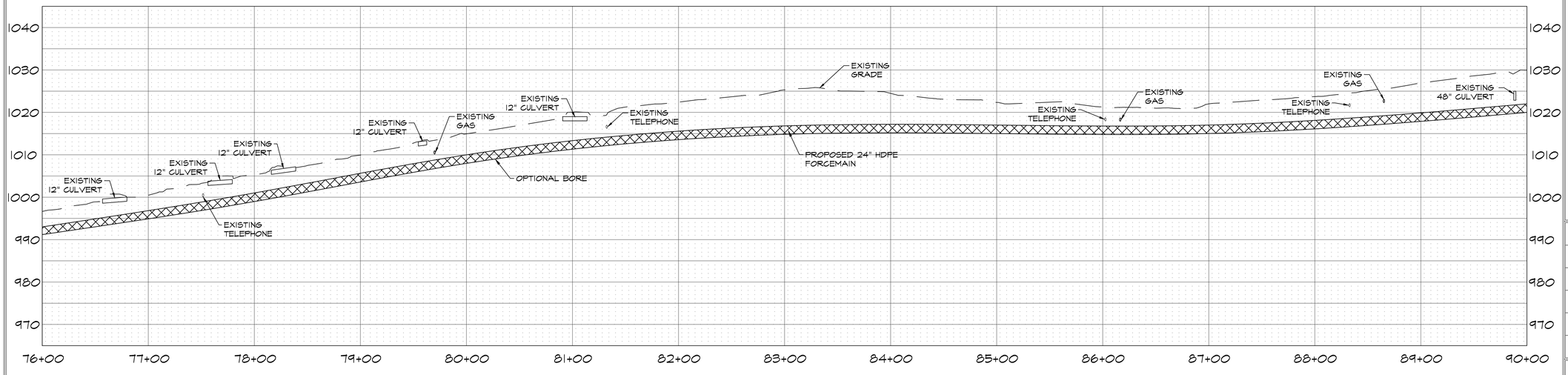

REGISTERED PROFESSIONAL ENGINEER
6/23/22
BRANDON WALL
21108
OKLAHOMA

WALL ENGINEERING
223 N. WASHINGTON, DURANT, OK 74701
OKLAHOMA CA #5413 EXP. JUNE 30, 2023

SUBMITTAL / REVISIONS:

DATE	BY	SUBMITTAL / REVISION
03/22	TL	ODEQ SUBMITTAL
06/22	TL	ISSUED FOR BIDDING

SHAWNEE MUNICIPAL AUTHORITY
CONVEYANCE - FORCEMAIN & DISCHARGE
SHAWNEE, OKLAHOMA

24" FORCEMAIN PLAN & PROFILE
STA. 76+00 TO 90+00

PROJECT NO.
SHN-20-01
DATE
06/22
DRAWN BY:
TL
CHECKED BY:
BW
REVIEWED BY:
DBW
SCALE:
1"=50'

BAR IS ONE INCH ON ORIGINAL DRAWING
0" 1"
IF NOT ONE INCH ON THIS SHEET, ADJUST SCALES ACCORDINGLY

SHEET
9

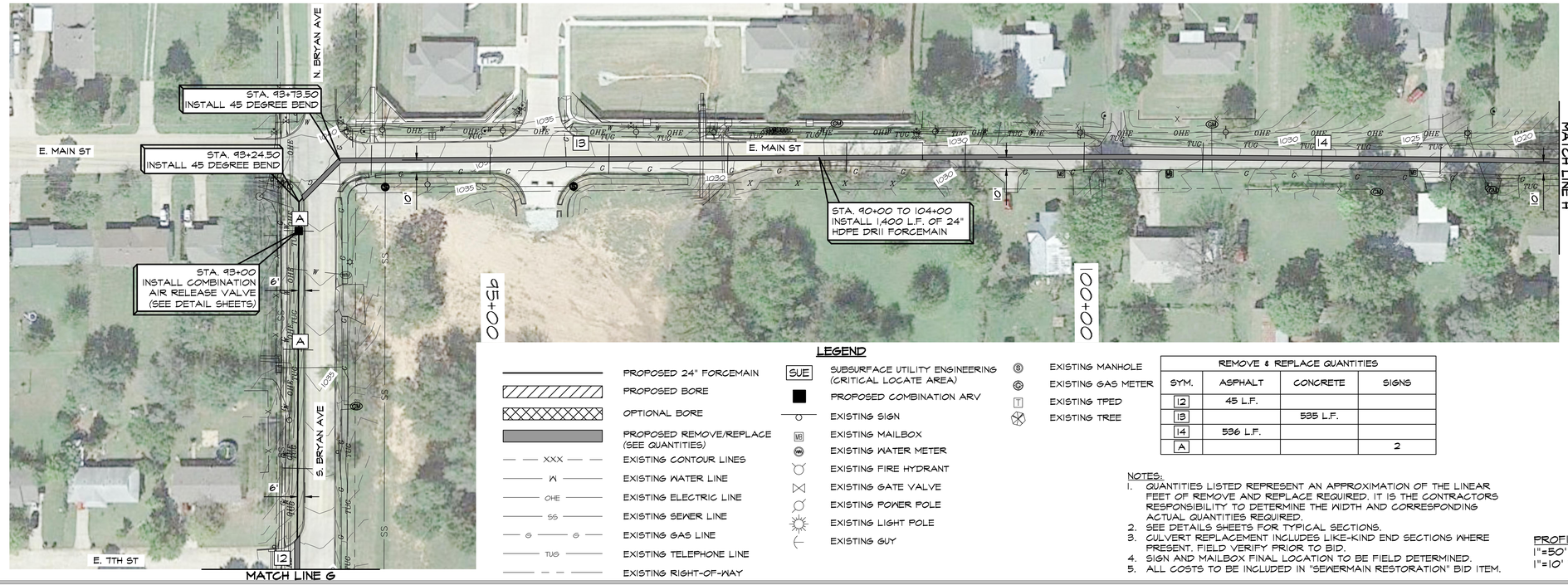

LEGEND

- PROPOSED 24" FORCEMAIN
- PROPOSED BORE
- OPTIONAL BORE
- PROPOSED REMOVE/REPLACE (SEE QUANTITIES)
- XXX — EXISTING CONTOUR LINES
- W — EXISTING WATER LINE
- OHE — EXISTING ELECTRIC LINE
- SS — EXISTING SEWER LINE
- G — EXISTING GAS LINE
- TUG — EXISTING TELEPHONE LINE
- EXISTING RIGHT-OF-WAY
- SUE — SUBSURFACE UTILITY ENGINEERING (CRITICAL LOCATE AREA)
- PROPOSED COMBINATION ARV
- EXISTING SIGN
- EXISTING MAILBOX
- EXISTING WATER METER
- EXISTING FIRE HYDRANT
- EXISTING GATE VALVE
- EXISTING POWER POLE
- EXISTING LIGHT POLE
- EXISTING GUY
- EXISTING MANHOLE
- EXISTING GAS METER
- EXISTING TPED
- EXISTING TREE

REMOVE & REPLACE QUANTITIES			
SYM.	ASPHALT	CONCRETE	SIGNS
12	45 L.F.		
13		535 L.F.	
14	536 L.F.		
A			2

NOTES:
1. QUANTITIES LISTED REPRESENT AN APPROXIMATION OF THE LINEAR FEET OF REMOVE AND REPLACE REQUIRED. IT IS THE CONTRACTORS RESPONSIBILITY TO DETERMINE THE WIDTH AND CORRESPONDING ACTUAL QUANTITIES REQUIRED.
2. SEE DETAILS SHEETS FOR TYPICAL SECTIONS.
3. CULVERT REPLACEMENT INCLUDES LIKE-KIND END SECTIONS WHERE PRESENT. FIELD VERIFY PRIOR TO BID.
4. SIGN AND MAILBOX FINAL LOCATION TO BE FIELD DETERMINED.
5. ALL COSTS TO BE INCLUDED IN "SEWERMAIN RESTORATION" BID ITEM.

PROFILE SCALE
1"=50' HOR
1"=10' VERT

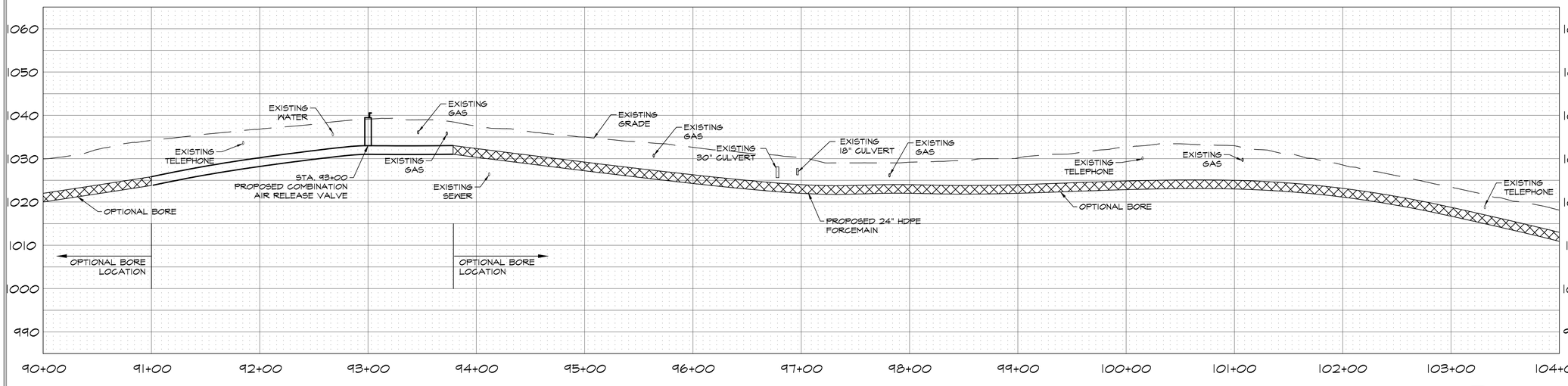

WALL ENGINEERING
223 N. WASHINGTON, DURANT, OK 74701
OKLAHOMA CA #5413 EXP. JUNE 30, 2023

SUBMITTAL / REVISIONS:

DATE	BY	SUBMITTAL / REVISION
03/22	TL	ODEQ SUBMITTAL
06/22	TL	ISSUED FOR BIDDING

SHAWNEE MUNICIPAL AUTHORITY
CONVEYANCE - FORCEMAIN & DISCHARGE
SHAWNEE, OKLAHOMA

24" FORCEMAIN PLAN & PROFILE
STA. 90+00 TO 104+00

PROJECT NO.
SHN-20-01
DATE
06/22
DRAWN BY:
TL
CHECKED BY:
BW
REVIEWED BY:
DBW
SCALE:
1"=50'

BAR IS ONE INCH ON ORIGINAL DRAWING
0" 1"
IF NOT ONE INCH ON THIS SHEET, ADJUST SCALES ACCORDINGLY

REGISTERED PROFESSIONAL ENGINEER
6/23/22
BRANDON WALL
21108
OKLAHOMA

SHEET
10

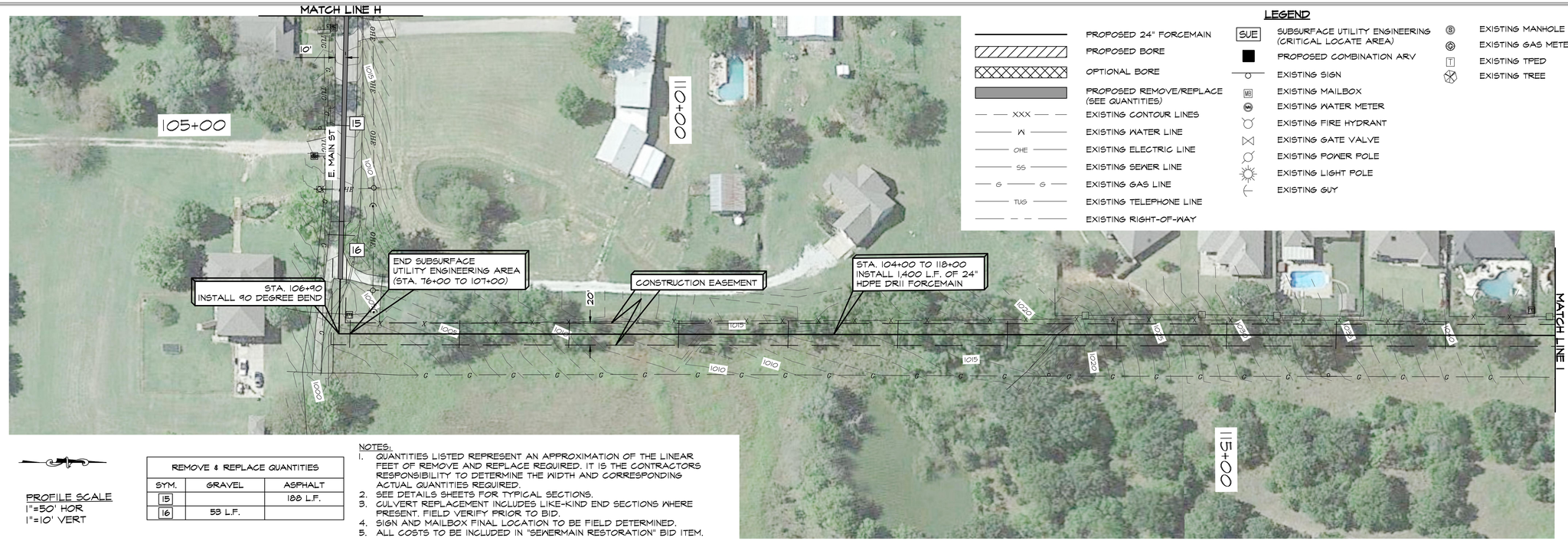

LEGEND

- PROPOSED 24" FORCEMAIN
- PROPOSED BORE
- OPTIONAL BORE
- PROPOSED REMOVE/REPLACE (SEE QUANTITIES)
- XXX — EXISTING CONTOUR LINES
- W — EXISTING WATER LINE
- OHE — EXISTING ELECTRIC LINE
- SS — EXISTING SEWER LINE
- G — G — EXISTING GAS LINE
- TUG — EXISTING TELEPHONE LINE
- EXISTING RIGHT-OF-WAY
- SUE — SUBSURFACE UTILITY ENGINEERING (CRITICAL LOCATE AREA)
- PROPOSED COMBINATION ARV
- EXISTING SIGN
- MB — EXISTING MAILBOX
- WM — EXISTING WATER METER
- EXISTING FIRE HYDRANT
- EXISTING GATE VALVE
- EXISTING POWER POLE
- EXISTING LIGHT POLE
- EXISTING GUY
- S — EXISTING MANHOLE
- G — EXISTING GAS METER
- T — EXISTING TPED
- EXISTING TREE

PROFILE SCALE
1"=50' HOR
1"=10' VERT

REMOVE & REPLACE QUANTITIES		
SYM.	GRAVEL	ASPHALT
15		188 L.F.
16	53 L.F.	

NOTES:
1. QUANTITIES LISTED REPRESENT AN APPROXIMATION OF THE LINEAR FEET OF REMOVE AND REPLACE REQUIRED. IT IS THE CONTRACTORS RESPONSIBILITY TO DETERMINE THE WIDTH AND CORRESPONDING ACTUAL QUANTITIES REQUIRED.
2. SEE DETAILS SHEETS FOR TYPICAL SECTIONS.
3. CULVERT REPLACEMENT INCLUDES LIKE-KIND END SECTIONS WHERE PRESENT. FIELD VERIFY PRIOR TO BID.
4. SIGN AND MAILBOX FINAL LOCATION TO BE FIELD DETERMINED.
5. ALL COSTS TO BE INCLUDED IN "SEWERMAIN RESTORATION" BID ITEM.

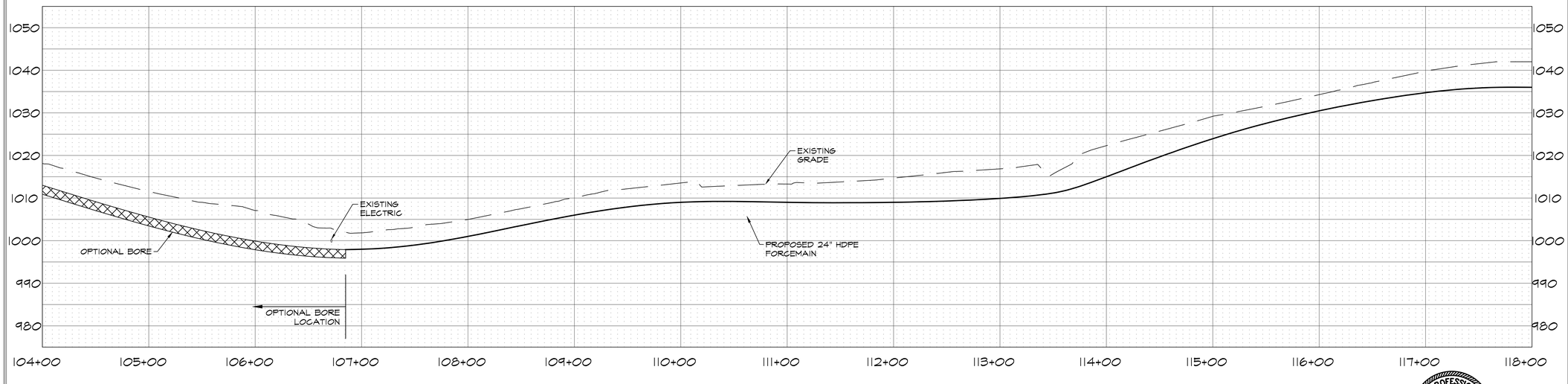

WALL ENGINEERING
223 N. WASHINGTON, DURANT, OK 74701
OKLAHOMA CA #5413 EXP. JUNE 30, 2023

SUBMITTAL / REVISIONS:

DATE	BY	SUBMITTAL / REVISION
03/22	TL	ODEQ SUBMITTAL
06/22	TL	ISSUED FOR BIDDING

SHAWNEE MUNICIPAL AUTHORITY
CONVEYANCE - FORCEMAIN & DISCHARGE
SHAWNEE, OKLAHOMA

24" FORCEMAIN PLAN & PROFILE
STA. 104+00 to 118+00

PROJECT NO.
SHN-20-01
DATE
06/22
DRAWN BY:
TL
CHECKED BY:
BW
REVIEWED BY:
DBW
SCALE:
1"=50'

BAR IS ONE INCH ON ORIGINAL DRAWING
0" 1"
IF NOT ONE INCH ON THIS SHEET, ADJUST SCALES ACCORDINGLY

SHEET
11

REGISTERED PROFESSIONAL ENGINEER
6/23/22
BRANDON WALL
21108
OKLAHOMA

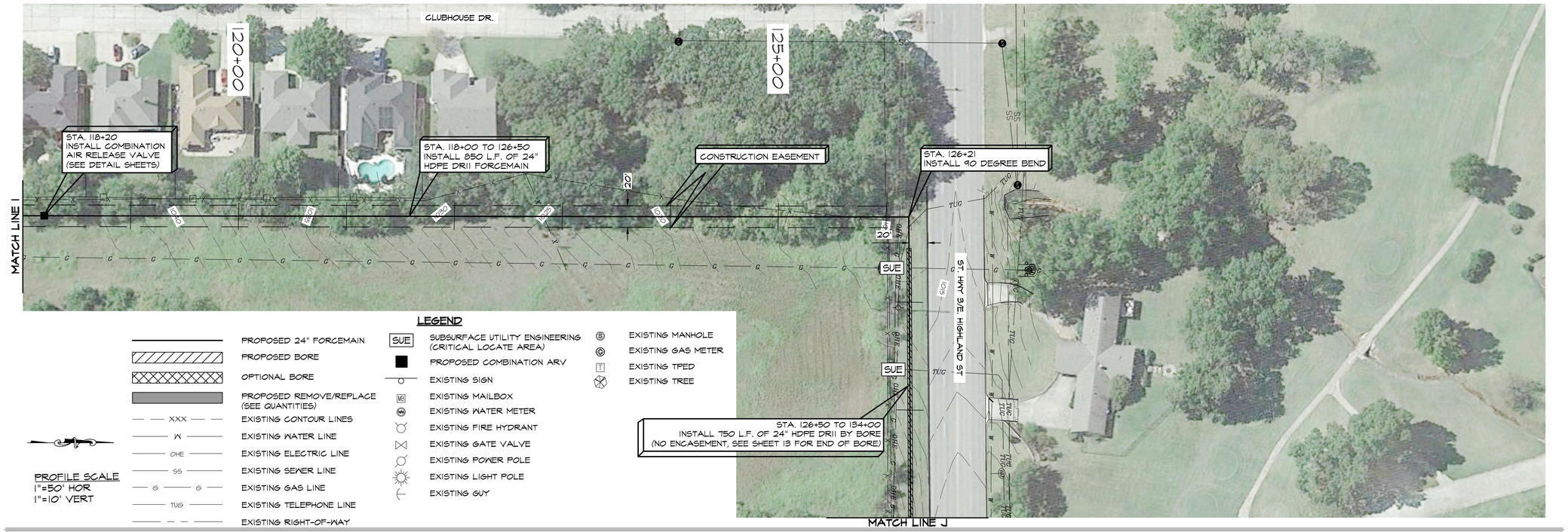

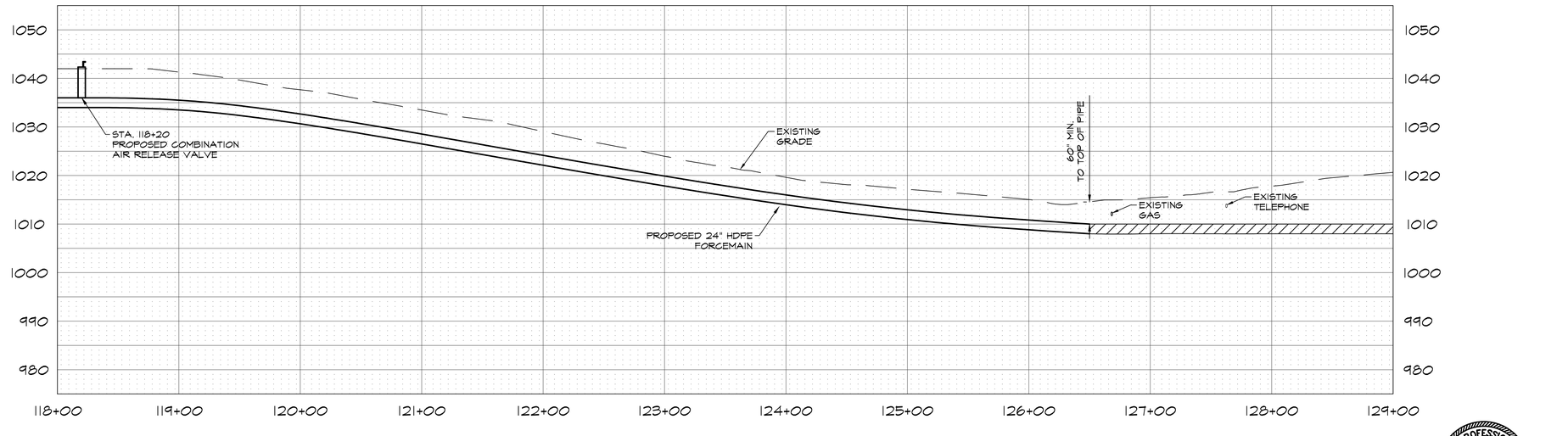



WALL ENGINEERING

223 N. WASHINGTON, DURANT, OK 74701
OKLAHOMA CA #5413 EXP. JUNE 30, 2023

SUBMITTAL / REVISIONS:

DATE	BY	SUBMITTAL / REVISION
03/22	TL	ODEQ SUBMITTAL
06/22	TL	ISSUED FOR BIDDING

SHAWNEE MUNICIPAL AUTHORITY
CONVEYANCE - FORCEMAIN & DISCHARGE
SHAWNEE, OKLAHOMA

24" FORCEMAIN PLAN & PROFILE
STA. 118+00 TO 129+00

PROJECT NO.
SHN-20-01
DATE
06/22
DRAWN BY:
TL
CHECKED BY:
BW
REVIEWED BY:
DBW
SCALE:
1"=50'

BAR IS ONE INCH ON ORIGINAL DRAWING
0' 1'
IF NOT ONE INCH ON THIS SHEET, ADJUST SCALES ACCORDINGLY

SHEET
12

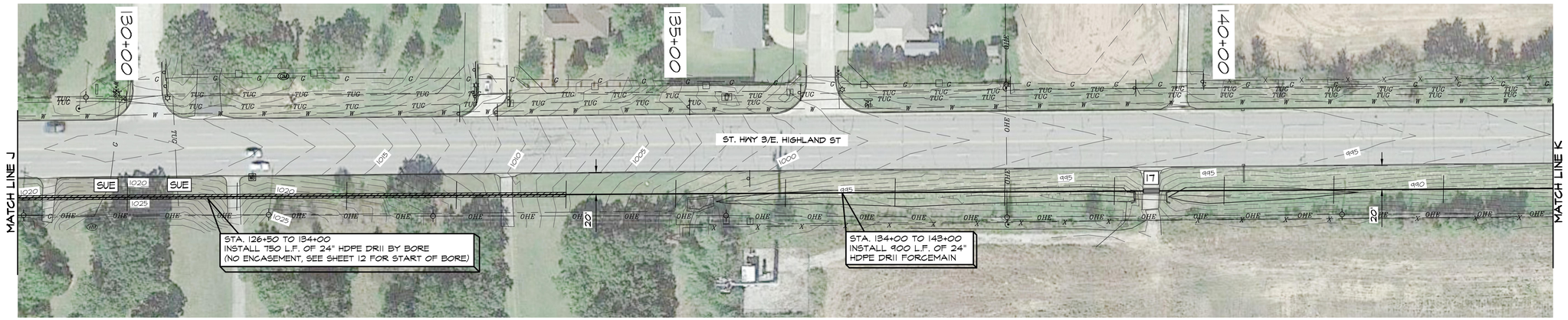

LEGEND

- PROPOSED 24" FORCEMAIN
- PROPOSED BORE
- OPTIONAL BORE
- PROPOSED REMOVE/REPLACE (SEE QUANTITIES)
- XXX — EXISTING CONTOUR LINES
- W — EXISTING WATER LINE
- OHE — EXISTING ELECTRIC LINE
- SS — EXISTING SEWER LINE
- G — EXISTING GAS LINE
- TUG — EXISTING TELEPHONE LINE
- EXISTING RIGHT-OF-WAY
- SUE — SUBSURFACE UTILITY ENGINEERING (CRITICAL LOCATE AREA)
- PROPOSED COMBINATION ARV
- EXISTING SIGN
- MB — EXISTING MAILBOX
- WM — EXISTING WATER METER
- EXISTING FIRE HYDRANT
- EXISTING GATE VALVE
- EXISTING POWER POLE
- EXISTING LIGHT POLE
- EXISTING GUY
- S — EXISTING MANHOLE
- G — EXISTING GAS METER
- T — EXISTING TPED
- EXISTING TREE

PROFILE SCALE
1"=50' HOR
1"=10' VERT

REMOVE & REPLACE QUANTITIES			
SYM.	ASPHALT	CULVERT	CULVERT LENGTH
17	15 L.F.	(2) 24"	(2) 30'

NOTES:
1. QUANTITIES LISTED REPRESENT AN APPROXIMATION OF THE LINEAR FEET OF REMOVE AND REPLACE REQUIRED. IT IS THE CONTRACTORS RESPONSIBILITY TO DETERMINE THE WIDTH AND CORRESPONDING ACTUAL QUANTITIES REQUIRED.
2. SEE DETAILS SHEETS FOR TYPICAL SECTIONS.
3. CULVERT REPLACEMENT INCLUDES LIKE-KIND END SECTIONS WHERE PRESENT. FIELD VERIFY PRIOR TO BID.
4. SIGN AND MAILBOX FINAL LOCATION TO BE FIELD DETERMINED.
5. ALL COSTS TO BE INCLUDED IN "SEWERMAIN RESTORATION" BID ITEM.

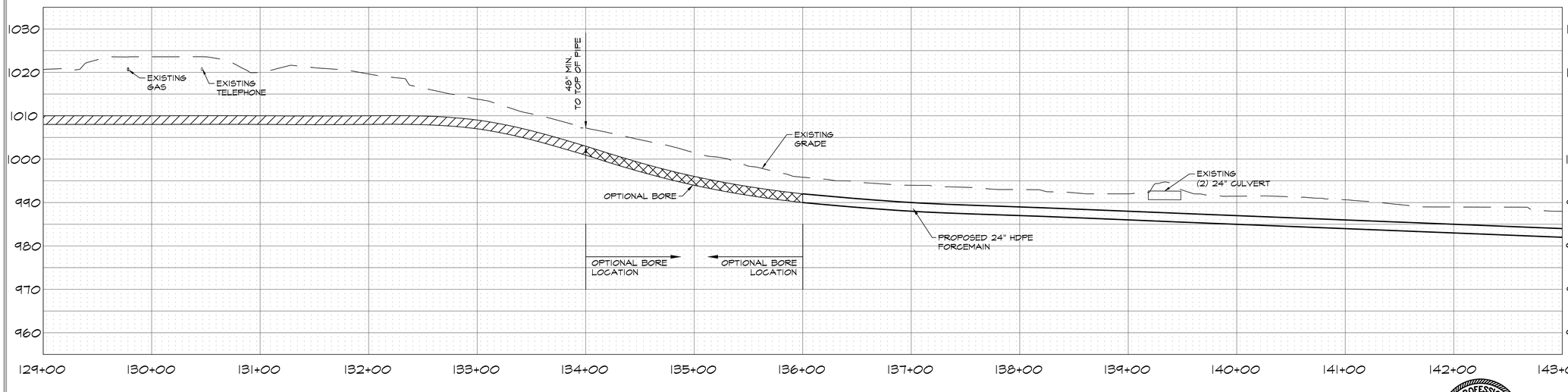

REGISTERED PROFESSIONAL ENGINEER
06/23/22
BRANDON WALL
21108
OKLAHOMA

WALL ENGINEERING
223 N. WASHINGTON, DURANT, OK 74701
OKLAHOMA CA #5413 EXP. JUNE 30, 2023

SUBMITTAL / REVISIONS:

DATE	BY	SUBMITTAL / REVISION
03/22	TL	ODEQ SUBMITTAL
06/22	TL	ISSUED FOR BIDDING

SHAWNEE MUNICIPAL AUTHORITY
CONVEYANCE - FORCEMAIN & DISCHARGE
SHAWNEE, OKLAHOMA

24" FORCEMAIN PLAN & PROFILE
STA. 129+00 TO 143+00

PROJECT NO.
SHN-20-01
DATE
06/22
DRAWN BY:
TL
CHECKED BY:
BW
REVIEWED BY:
DBW
SCALE:
1"=50'

BAR IS ONE INCH ON ORIGINAL DRAWING
0" 1"
IF NOT ONE INCH ON THIS SHEET, ADJUST SCALES ACCORDINGLY

SHEET
13

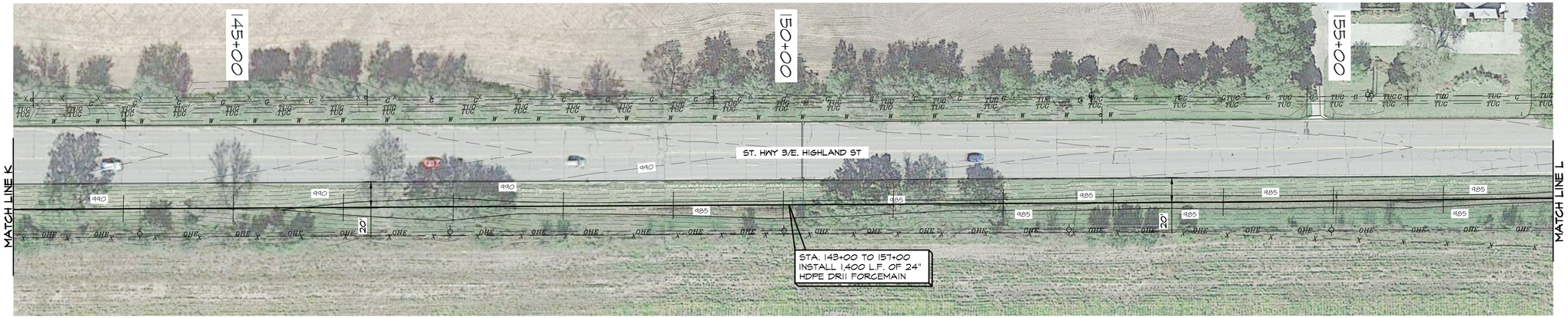

LEGEND

- PROPOSED 24" FORCEMAIN
- PROPOSED BORE
- OPTIONAL BORE
- PROPOSED REMOVE/REPLACE (SEE QUANTITIES)
- XXX — EXISTING CONTOUR LINES
- W — EXISTING WATER LINE
- OHE — EXISTING ELECTRIC LINE
- SS — EXISTING SEWER LINE
- G — EXISTING GAS LINE
- TUG — EXISTING TELEPHONE LINE
- EXISTING RIGHT-OF-WAY
- SUE — SUBSURFACE UTILITY ENGINEERING (CRITICAL LOCATE AREA)
- PROPOSED COMBINATION ARV
- EXISTING SIGN
- MB — EXISTING MAILBOX
- WM — EXISTING WATER METER
- EXISTING FIRE HYDRANT
- EXISTING GATE VALVE
- EXISTING POWER POLE
- EXISTING LIGHT POLE
- EXISTING GUY
- S — EXISTING MANHOLE
- G — EXISTING GAS METER
- T — EXISTING TPED
- EXISTING TREE

PROFILE SCALE
1"=50' HOR
1"=10' VERT

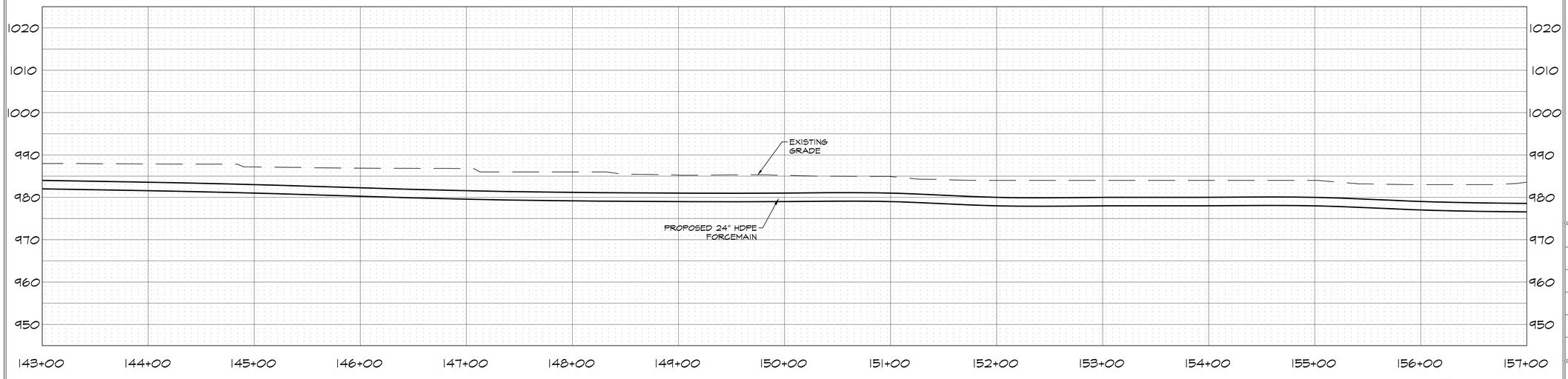

REGISTERED PROFESSIONAL ENGINEER
6/23/22
BRANDON WALL
21108
OKLAHOMA

WALL ENGINEERING
223 N. WASHINGTON, DURANT, OK 74701
OKLAHOMA CA #5413 EXP. JUNE 30, 2023

SUBMITTAL / REVISIONS:

DATE	BY	SUBMITTAL / REVISION
03/22	TL	ODEQ SUBMITTAL
06/22	TL	ISSUED FOR BIDDING

SHAWNEE MUNICIPAL AUTHORITY
CONVEYANCE - FORCEMAIN & DISCHARGE
SHAWNEE, OKLAHOMA

24" FORCEMAIN PLAN & PROFILE
STA. 143+00 TO 157+00

PROJECT NO.
SHN-20-01
DATE
06/22
DRAWN BY:
TL
CHECKED BY:
BW
REVIEWED BY:
DBW
SCALE:
1"=50'

BAR IS ONE INCH ON ORIGINAL DRAWING
0" 1"
IF NOT ONE INCH ON THIS SHEET, ADJUST SCALES ACCORDINGLY

SHEET
14

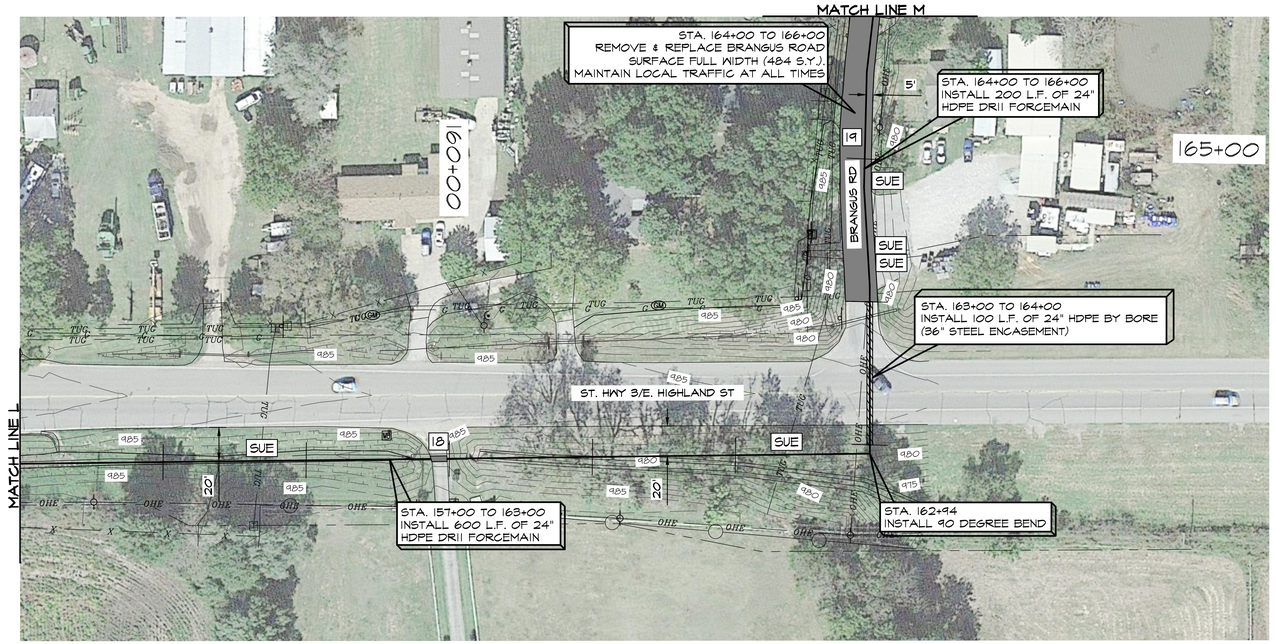

LEGEND

	PROPOSED 24" FORCEMAIN	SUE	SUBSURFACE UTILITY ENGINEERING (CRITICAL LOCATE AREA)	S	EXISTING MANHOLE
	PROPOSED BORE		PROPOSED COMBINATION ARV	G	EXISTING GAS METER
	OPTIONAL BORE		EXISTING SIGN	T	EXISTING TPED
	PROPOSED REMOVE/REPLACE (SEE QUANTITIES)	MB	EXISTING MAILBOX		EXISTING TREE
XXX	EXISTING CONTOUR LINES	WM	EXISTING WATER METER		
W	EXISTING WATER LINE		EXISTING FIRE HYDRANT		
OHE	EXISTING ELECTRIC LINE		EXISTING GATE VALVE		
SS	EXISTING SEWER LINE		EXISTING POWER POLE		
G	EXISTING GAS LINE		EXISTING LIGHT POLE		
TUG	EXISTING TELEPHONE LINE		EXISTING GUY		
	EXISTING RIGHT-OF-WAY				

REMOVE & REPLACE QUANTITIES			
SYM.	ASPHALT	CULVERT	CULVERT LENGTH
18	12 L.F.	38"x50" CMPA	40 L.F.
19	484 S.Y.		

NOTES:
1. QUANTITIES LISTED REPRESENT AN APPROXIMATION OF THE LINEAR FEET OF REMOVE AND REPLACE REQUIRED. IT IS THE CONTRACTORS RESPONSIBILITY TO DETERMINE THE WIDTH AND CORRESPONDING ACTUAL QUANTITIES REQUIRED.
2. SEE DETAILS SHEETS FOR TYPICAL SECTIONS.
3. CULVERT REPLACEMENT INCLUDES LIKE-KIND END SECTIONS WHERE PRESENT. FIELD VERIFY PRIOR TO BID.
4. SIGN AND MAILBOX FINAL LOCATION TO BE FIELD DETERMINED.
5. ALL COSTS TO BE INCLUDED IN "SEWERMAIN RESTORATION" BID ITEM.

PROFILE SCALE
1"=50' HOR
1"=10' VERT

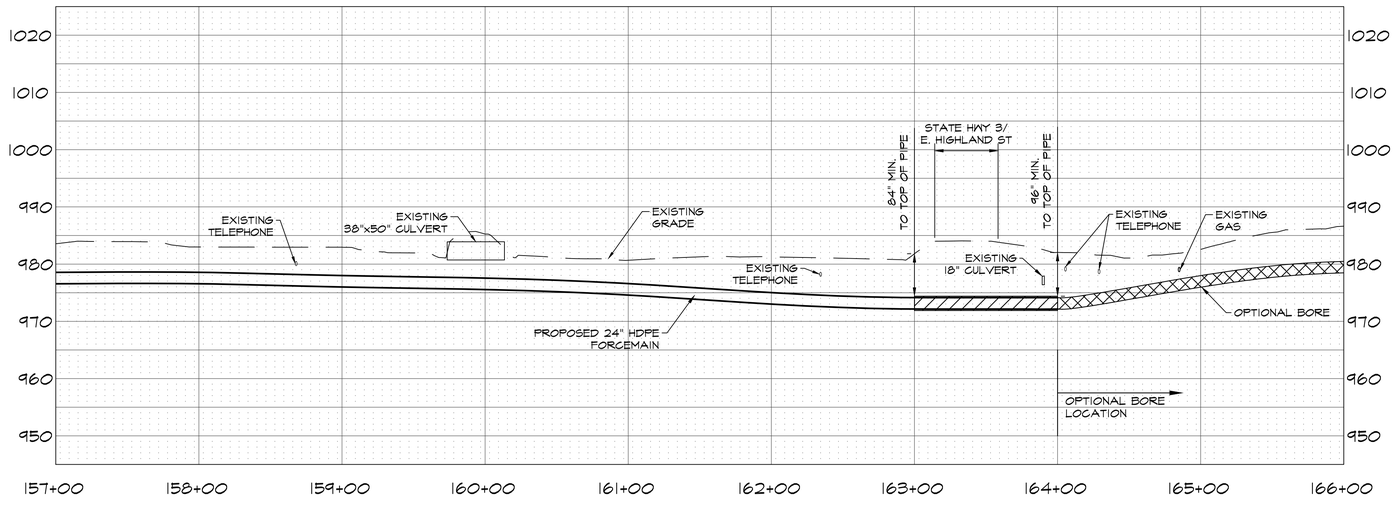



WALL ENGINEERING
223 N. WASHINGTON, DURANT, OK 74701
OKLAHOMA CA #5413 EXP. JUNE 30, 2023

SUBMITTAL / REVISIONS:

DATE	BY	SUBMITTAL / REVISION
03/22	TL	ODEQ SUBMITTAL
06/22	TL	ISSUED FOR BIDDING

SHAWNEE MUNICIPAL AUTHORITY
CONVEYANCE - FORCEMAIN & DISCHARGE
SHAWNEE, OKLAHOMA

24" FORCEMAIN PLAN & PROFILE
STA. 157+00 TO 166+00

PROJECT NO.
SHN-20-01
DATE
06/22
DRAWN BY:
TL
CHECKED BY:
BW
REVIEWED BY:
DBW
SCALE:
1"=50'

BAR IS ONE INCH ON ORIGINAL DRAWING
0" 1"
IF NOT ONE INCH ON THIS SHEET, ADJUST SCALES ACCORDINGLY

SHEET
15

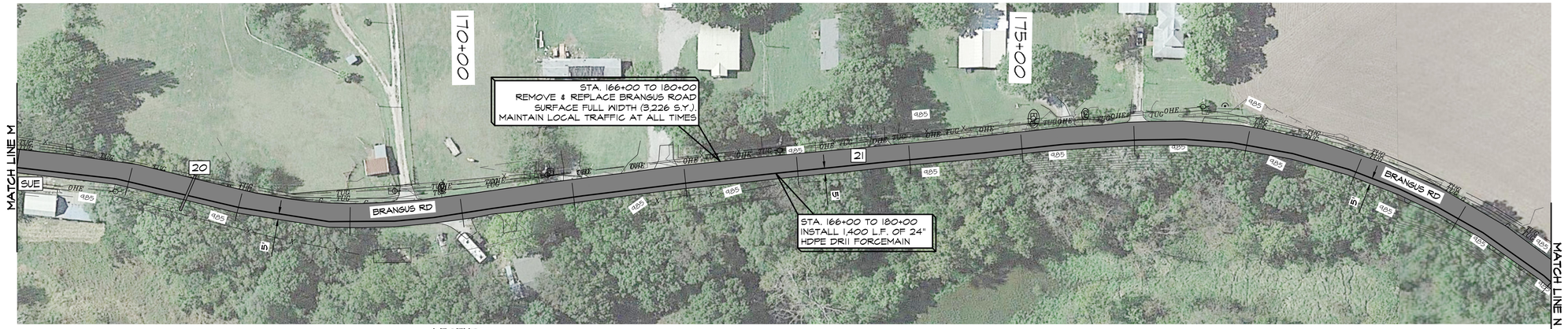

LEGEND

- PROPOSED 24" FORCEMAIN
- PROPOSED BORE
- OPTIONAL BORE
- PROPOSED REMOVE/REPLACE (SEE QUANTITIES)
- XXX EXISTING CONTOUR LINES
- W EXISTING WATER LINE
- OHE EXISTING ELECTRIC LINE
- SS EXISTING SEWER LINE
- G EXISTING GAS LINE
- TUG EXISTING TELEPHONE LINE
- EXISTING RIGHT-OF-WAY

- SUE SUBSURFACE UTILITY ENGINEERING (CRITICAL LOCATE AREA)
- PROPOSED COMBINATION ARV
- EXISTING SIGN
- MB EXISTING MAILBOX
- EXISTING WATER METER
- EXISTING FIRE HYDRANT
- EXISTING GATE VALVE
- EXISTING POWER POLE
- EXISTING LIGHT POLE
- EXISTING GUY
- S EXISTING MANHOLE
- G EXISTING GAS METER
- T EXISTING TPED
- EXISTING TREE

PROFILE SCALE
1"=50' HOR
1"=10' VERT

REMOVE & REPLACE QUANTITIES			
SYM.	ASPHALT	CULVERT	CULVERT LENGTH
20		24" CMP	34 L.F.
21	3,226 S.Y.		

NOTES:
1. QUANTITIES LISTED REPRESENT AN APPROXIMATION OF THE LINEAR FEET OF REMOVE AND REPLACE REQUIRED. IT IS THE CONTRACTORS RESPONSIBILITY TO DETERMINE THE WIDTH AND CORRESPONDING ACTUAL QUANTITIES REQUIRED.
2. SEE DETAILS SHEETS FOR TYPICAL SECTIONS.
3. CULVERT REPLACEMENT INCLUDES LIKE-KIND END SECTIONS WHERE PRESENT. FIELD VERIFY PRIOR TO BID.
4. SIGN AND MAILBOX FINAL LOCATION TO BE FIELD DETERMINED.
5. ALL COSTS TO BE INCLUDED IN "SEWERMAIN RESTORATION" BID ITEM.

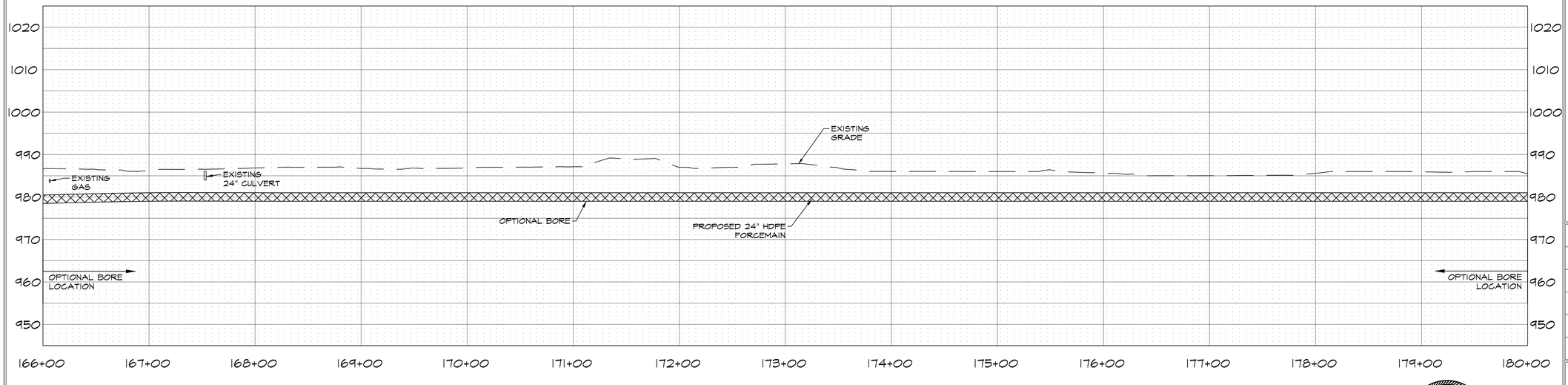



WALL ENGINEERING
223 N. WASHINGTON, DURANT, OK 74701
OKLAHOMA CA #5413 EXP. JUNE 30, 2023

SUBMITTAL / REVISIONS:

DATE	BY	SUBMITTAL / REVISION
03/22	TL	ODEQ SUBMITTAL
06/22	TL	ISSUED FOR BIDDING

SHAWNEE MUNICIPAL AUTHORITY
CONVEYANCE - FORCEMAIN & DISCHARGE
SHAWNEE, OKLAHOMA

24" FORCEMAIN PLAN & PROFILE
STA. 166+00 TO 180+00

PROJECT NO.
SHN-20-01
DATE
06/22
DRAWN BY:
TL
CHECKED BY:
BW
REVIEWED BY:
DBW
SCALE:
1"=50'

BAR IS ONE INCH ON ORIGINAL DRAWING
0" 1"
IF NOT ONE INCH ON THIS SHEET, ADJUST SCALES ACCORDINGLY

SHEET
16

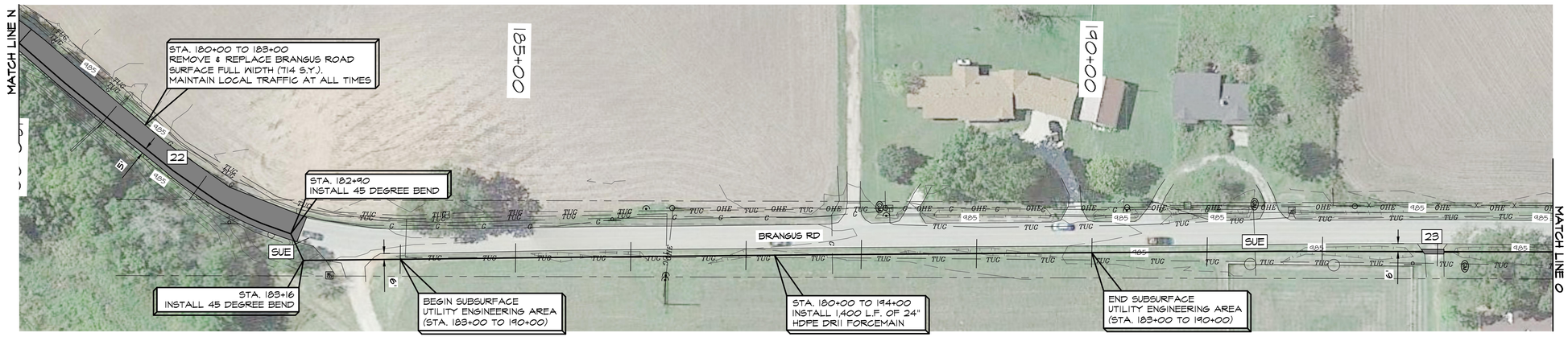

LEGEND

- PROPOSED 24" FORCEMAIN
- PROPOSED BORE
- OPTIONAL BORE
- PROPOSED REMOVE/REPLACE (SEE QUANTITIES)
- XXX — EXISTING CONTOUR LINES
- W — EXISTING WATER LINE
- OHE — EXISTING ELECTRIC LINE
- SS — EXISTING SEWER LINE
- G — EXISTING GAS LINE
- TUG — EXISTING TELEPHONE LINE
- EXISTING RIGHT-OF-WAY
- SUE — SUBSURFACE UTILITY ENGINEERING (CRITICAL LOCATE AREA)
- PROPOSED COMBINATION ARV
- EXISTING SIGN
- MB — EXISTING MAILBOX
- WM — EXISTING WATER METER
- EXISTING FIRE HYDRANT
- EXISTING GATE VALVE
- EXISTING POWER POLE
- EXISTING LIGHT POLE
- EXISTING GUY
- EXISTING MANHOLE
- G — EXISTING GAS METER
- T — EXISTING TPED
- EXISTING TREE

PROFILE SCALE
1"=50' HOR
1"=10' VERT

REMOVE & REPLACE QUANTITIES				
SYM.	GRAVEL	ASPHALT	CULVERT	CULVERT LENGTH
22		714 S.Y.		
23	18 L.F.		24"x18" CMPA	37 L.F.

NOTES:
1. QUANTITIES LISTED REPRESENT AN APPROXIMATION OF THE LINEAR FEET OF REMOVE AND REPLACE REQUIRED. IT IS THE CONTRACTORS RESPONSIBILITY TO DETERMINE THE WIDTH AND CORRESPONDING ACTUAL QUANTITIES REQUIRED.
2. SEE DETAILS SHEETS FOR TYPICAL SECTIONS.
3. CULVERT REPLACEMENT INCLUDES LIKE-KIND END SECTIONS WHERE PRESENT. FIELD VERIFY PRIOR TO BID.
4. SIGN AND MAILBOX FINAL LOCATION TO BE FIELD DETERMINED.
5. ALL COSTS TO BE INCLUDED IN "SEWERMAIN RESTORATION" BID ITEM.

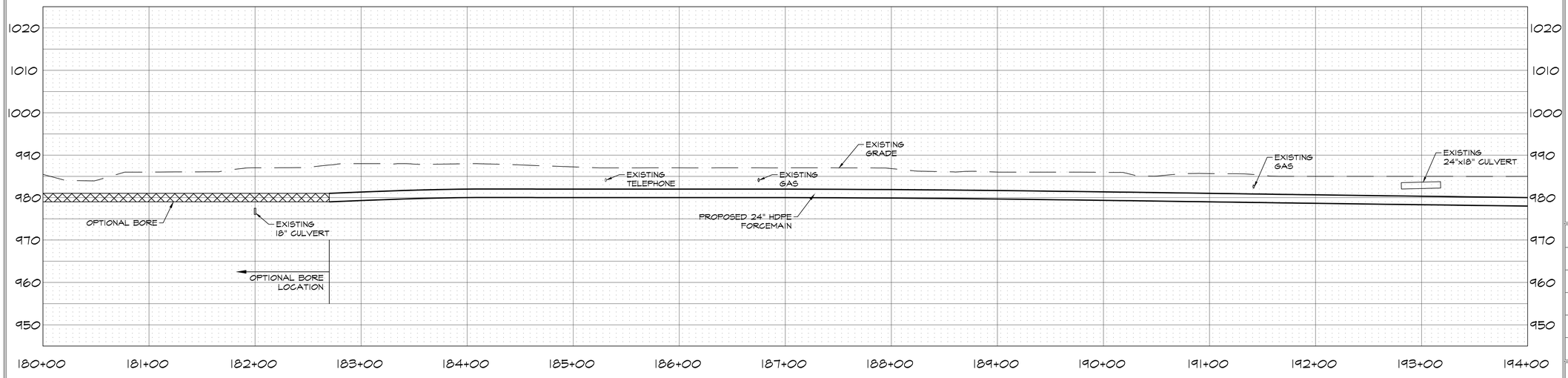

REGISTERED PROFESSIONAL ENGINEER
06/24/22
BRANDON WALL
21108
OKLAHOMA

WALL ENGINEERING
223 N. WASHINGTON, DURANT, OK 74701
OKLAHOMA CA #5413 EXP. JUNE 30, 2023

SUBMITTAL / REVISIONS:

DATE	BY	SUBMITTAL / REVISION
03/22	TL	ODEQ SUBMITTAL
06/22	TL	ISSUED FOR BIDDING

SHAWNEE MUNICIPAL AUTHORITY
CONVEYANCE - FORCEMAIN & DISCHARGE
SHAWNEE, OKLAHOMA

24" FORCEMAIN PLAN & PROFILE
STA. 180+00 TO 194+00

PROJECT NO.
SHN-20-01
DATE
06/22
DRAWN BY:
TL
CHECKED BY:
BW
REVIEWED BY:
DBW
SCALE:
1"=50'

BAR IS ONE INCH ON ORIGINAL DRAWING
0" 1"
IF NOT ONE INCH ON THIS SHEET, ADJUST SCALES ACCORDINGLY

SHEET
17

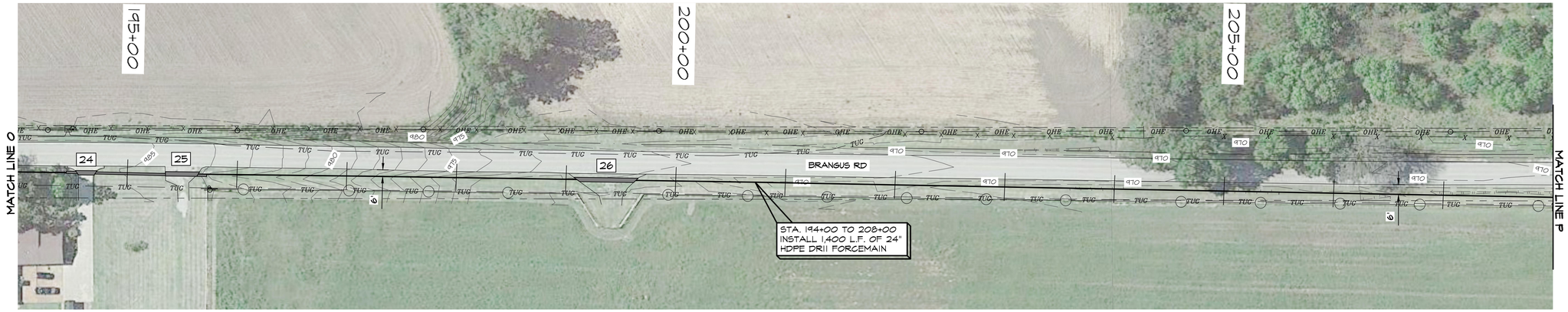

LEGEND

- PROPOSED 24" FORCEMAIN
- PROPOSED BORE
- OPTIONAL BORE
- PROPOSED REMOVE/REPLACE (SEE QUANTITIES)
- XXX — EXISTING CONTOUR LINES
- W — EXISTING WATER LINE
- OHE — EXISTING ELECTRIC LINE
- SS — EXISTING SEWER LINE
- G — EXISTING GAS LINE
- TUG — EXISTING TELEPHONE LINE
- EXISTING RIGHT-OF-WAY
- SUE — SUBSURFACE UTILITY ENGINEERING (CRITICAL LOCATE AREA)
- PROPOSED COMBINATION ARV
- EXISTING SIGN
- MB — EXISTING MAILBOX
- WM — EXISTING WATER METER
- EXISTING FIRE HYDRANT
- EXISTING GATE VALVE
- EXISTING POWER POLE
- EXISTING LIGHT POLE
- EXISTING GUY
- S — EXISTING MANHOLE
- EXISTING GAS METER
- T — EXISTING TPED
- EXISTING TREE

PROFILE SCALE
1"=50' HOR
1"=10' VERT

REMOVE & REPLACE QUANTITIES					
SYM.	GRAVEL	ASPHALT	CONCRETE	CULVERT	CULVERT LENGTH
24			17 L.F.	24"x18" CMPA	128 L.F.
25		30 L.F.			
26	54 L.F.				

NOTES:
1. QUANTITIES LISTED REPRESENT AN APPROXIMATION OF THE LINEAR FEET OF REMOVE AND REPLACE REQUIRED. IT IS THE CONTRACTORS RESPONSIBILITY TO DETERMINE THE WIDTH AND CORRESPONDING ACTUAL QUANTITIES REQUIRED.
2. SEE DETAILS SHEETS FOR TYPICAL SECTIONS.
3. CULVERT REPLACEMENT INCLUDES LIKE-KIND END SECTIONS WHERE PRESENT. FIELD VERIFY PRIOR TO BID.
4. SIGN AND MAILBOX FINAL LOCATION TO BE FIELD DETERMINED.
5. ALL COSTS TO BE INCLUDED IN "SEWERMAIN RESTORATION" BID ITEM.

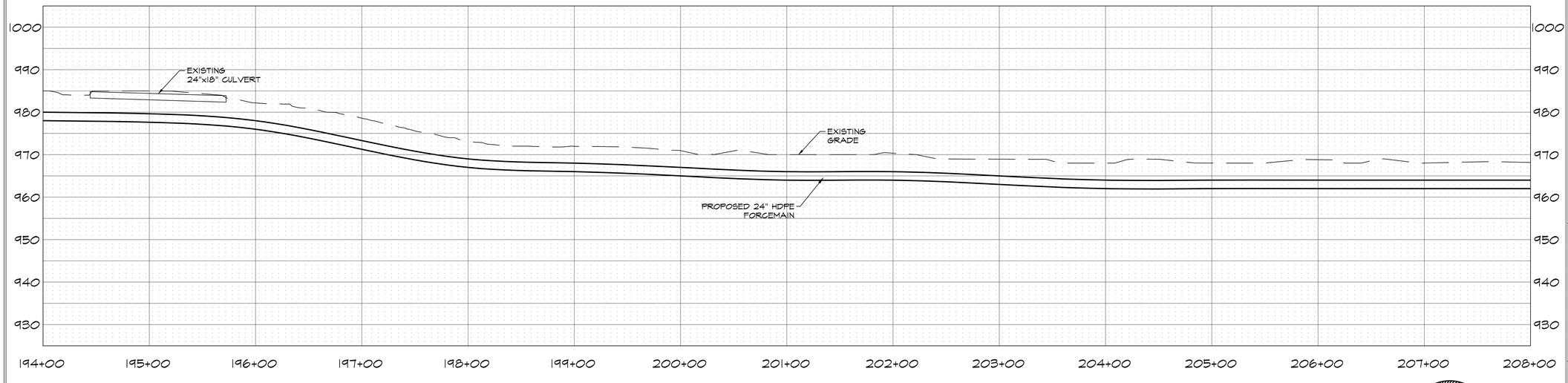

REGISTERED PROFESSIONAL ENGINEER
BRANDON WALL
21108
OKLAHOMA

WALL ENGINEERING
223 N. WASHINGTON, DURANT, OK 74701
OKLAHOMA CA #5413 EXP. JUNE 30, 2023

SUBMITTAL / REVISIONS:

DATE	BY	SUBMITTAL / REVISION
03/22	TL	ODEQ SUBMITTAL
06/22	TL	ISSUED FOR BIDDING

SHAWNEE MUNICIPAL AUTHORITY
CONVEYANCE - FORCEMAIN & DISCHARGE
SHAWNEE, OKLAHOMA

24" FORCEMAIN PLAN & PROFILE
STA. 194+00 TO 208+00

PROJECT NO.
SHN-20-01
DATE
06/22
DRAWN BY:
TL
CHECKED BY:
BW
REVIEWED BY:
DBW
SCALE:
1"=50'

BAR IS ONE INCH ON ORIGINAL DRAWING
0" 1"
IF NOT ONE INCH ON THIS SHEET, ADJUST SCALES ACCORDINGLY

SHEET
18

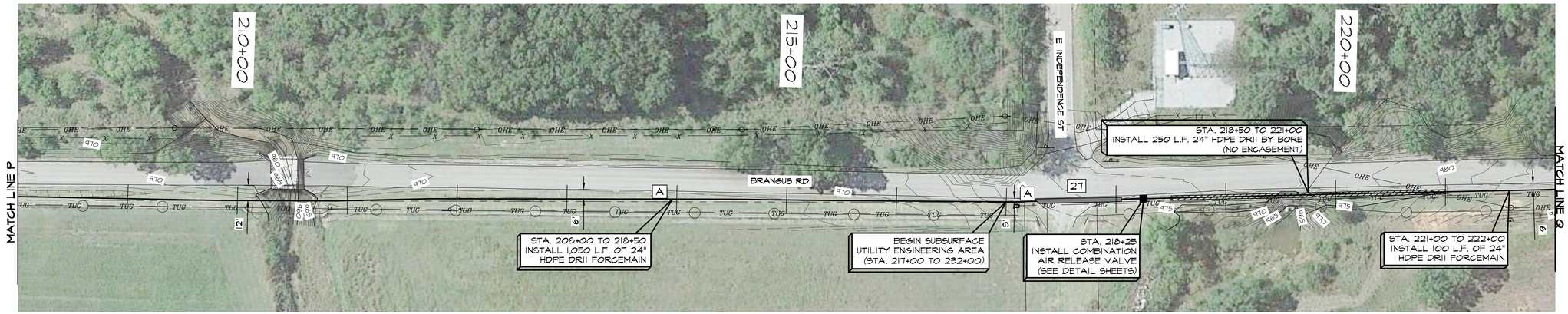

LEGEND

- PROPOSED 24" FORCEMAIN
- PROPOSED BORE
- OPTIONAL BORE
- PROPOSED REMOVE/REPLACE (SEE QUANTITIES)
- EXISTING CONTOUR LINES
- EXISTING WATER LINE
- EXISTING ELECTRIC LINE
- EXISTING SEWER LINE
- EXISTING GAS LINE
- EXISTING TELEPHONE LINE
- EXISTING RIGHT-OF-WAY
- SUBSURFACE UTILITY ENGINEERING (CRITICAL LOCATE AREA)
- PROPOSED COMBINATION ARV
- EXISTING SIGN
- EXISTING MAILBOX
- EXISTING WATER METER
- EXISTING FIRE HYDRANT
- EXISTING GATE VALVE
- EXISTING POWER POLE
- EXISTING LIGHT POLE
- EXISTING GUY
- EXISTING MANHOLE
- EXISTING GAS METER
- EXISTING TPED
- EXISTING TREE

PROFILE SCALE
1"=50' HOR
1"=10' VERT

REMOVE & REPLACE QUANTITIES		
SYM.	GRAVEL	SIGNS
27	77 L.F.	
A		2

NOTES:
1. QUANTITIES LISTED REPRESENT AN APPROXIMATION OF THE LINEAR FEET OF REMOVE AND REPLACE REQUIRED. IT IS THE CONTRACTORS RESPONSIBILITY TO DETERMINE THE WIDTH AND CORRESPONDING ACTUAL QUANTITIES REQUIRED.
2. SEE DETAILS SHEETS FOR TYPICAL SECTIONS.
3. CULVERT REPLACEMENT INCLUDES LIKE-KIND END SECTIONS WHERE PRESENT. FIELD VERIFY PRIOR TO BID.
4. SIGN AND MAILBOX FINAL LOCATION TO BE FIELD DETERMINED.
5. ALL COSTS TO BE INCLUDED IN "SEWERMAIN RESTORATION" BID ITEM.

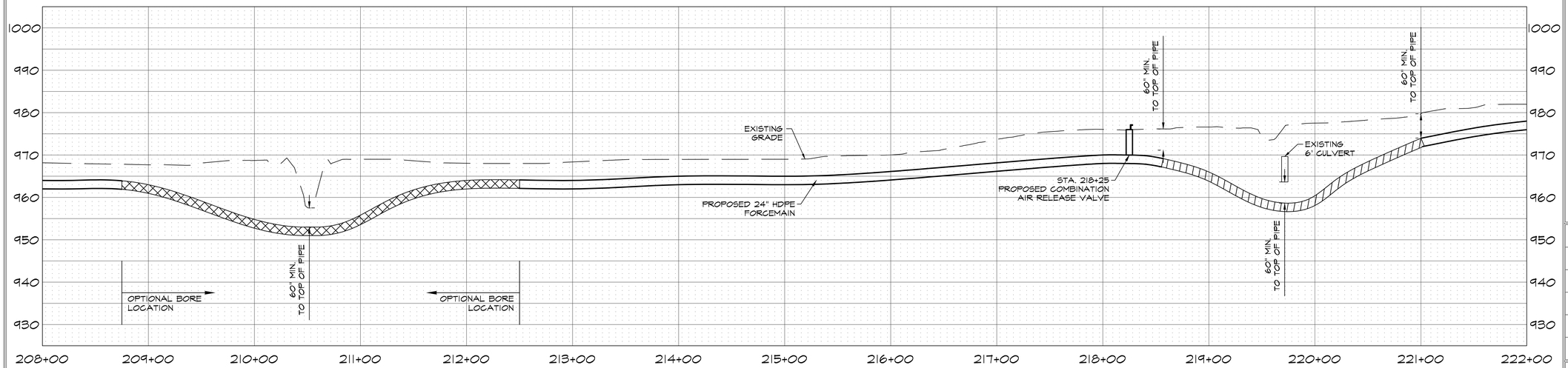

WALL ENGINEERING
223 N. WASHINGTON, DURANT, OK 74701
OKLAHOMA CA #5413 EXP. JUNE 30, 2023

SUBMITTAL / REVISIONS:

DATE	BY	SUBMITTAL / REVISION
03/22	TL	ODEQ SUBMITTAL
06/22	TL	ISSUED FOR BIDDING

SHAWNEE MUNICIPAL AUTHORITY
CONVEYANCE - FORCEMAIN & DISCHARGE
SHAWNEE, OKLAHOMA

24" FORCEMAIN PLAN & PROFILE
STA. 208+00 TO 222+00

PROJECT NO. SHN-20-01
DATE 06/22
DRAWN BY: TL
CHECKED BY: BW
REVIEWED BY: DBW
SCALE: 1"=50'

BAR IS ONE INCH ON ORIGINAL DRAWING
0" 1"
IF NOT ONE INCH ON THIS SHEET, ADJUST SCALES ACCORDINGLY

REGISTERED PROFESSIONAL ENGINEER
06/24/22
BRANDON WALL
21108
OKLAHOMA

SHEET 19

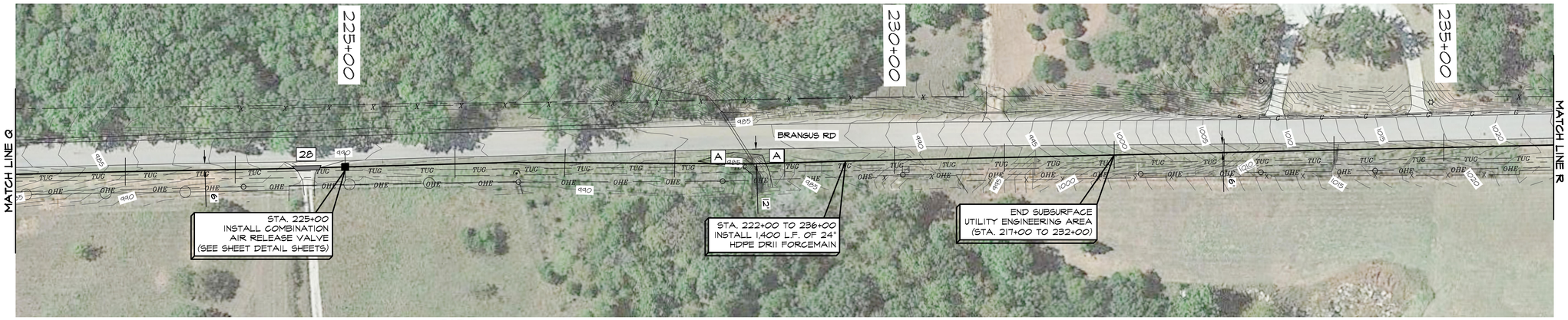

LEGEND

- PROPOSED 24" FORCEMAIN
- PROPOSED BORE
- OPTIONAL BORE
- PROPOSED REMOVE/REPLACE (SEE QUANTITIES)
- EXISTING CONTOUR LINES
- EXISTING WATER LINE
- EXISTING ELECTRIC LINE
- EXISTING SEWER LINE
- EXISTING GAS LINE
- EXISTING TELEPHONE LINE
- EXISTING RIGHT-OF-WAY
- SUE SUBSURFACE UTILITY ENGINEERING (CRITICAL LOCATE AREA)
- PROPOSED COMBINATION ARV
- EXISTING SIGN
- EXISTING MAILBOX
- EXISTING WATER METER
- EXISTING FIRE HYDRANT
- EXISTING GATE VALVE
- EXISTING POWER POLE
- EXISTING LIGHT POLE
- EXISTING GUY
- EXISTING MANHOLE
- EXISTING GAS METER
- EXISTING TPED
- EXISTING TREE

PROFILE SCALE
1"=50' HOR
1"=10' VERT

REMOVE & REPLACE QUANTITIES		
SYM.	GRAVEL	SIGNS
28	24 L.F.	
A		2

NOTES:
1. QUANTITIES LISTED REPRESENT AN APPROXIMATION OF THE LINEAR FEET OF REMOVE AND REPLACE REQUIRED. IT IS THE CONTRACTORS RESPONSIBILITY TO DETERMINE THE WIDTH AND CORRESPONDING ACTUAL QUANTITIES REQUIRED.
2. SEE DETAILS SHEETS FOR TYPICAL SECTIONS.
3. CULVERT REPLACEMENT INCLUDES LIKE-KIND END SECTIONS WHERE PRESENT. FIELD VERIFY PRIOR TO BID.
4. SIGN AND MAILBOX FINAL LOCATION TO BE FIELD DETERMINED.
5. ALL COSTS TO BE INCLUDED IN "SEWERMAIN RESTORATION" BID ITEM.

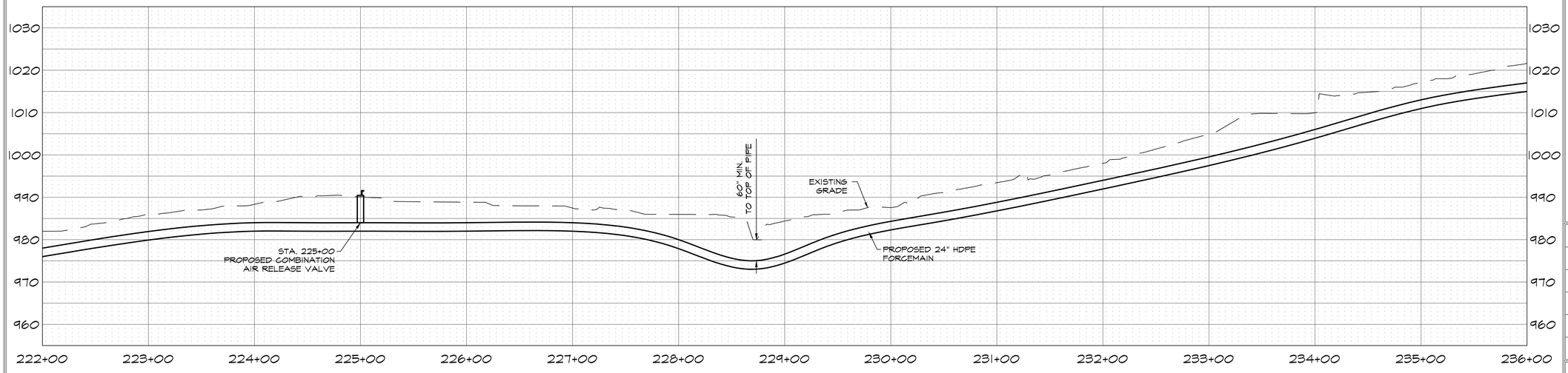



WALL ENGINEERING
223 N. WASHINGTON, DURANT, OK 74701
OKLAHOMA CA #5413 EXP. JUNE 30, 2023

SUBMITTAL / REVISIONS:

DATE	BY	SUBMITTAL / REVISION
03/22	TL	ODEQ SUBMITTAL
06/22	TL	ISSUED FOR BIDDING

SHAWNEE MUNICIPAL AUTHORITY
CONVEYANCE - FORCEMAIN & DISCHARGE
SHAWNEE, OKLAHOMA

24" FORCEMAIN PLAN & PROFILE
STA. 222+00 TO 236+00

PROJECT NO. SHN-20-01
DATE 06/22
DRAWN BY: TL
CHECKED BY: BW
REVIEWED BY: DBW
SCALE: 1"=50'

BAR IS ONE INCH ON ORIGINAL DRAWING
0" 1"
IF NOT ONE INCH ON THIS SHEET, ADJUST SCALES ACCORDINGLY

SHEET
20

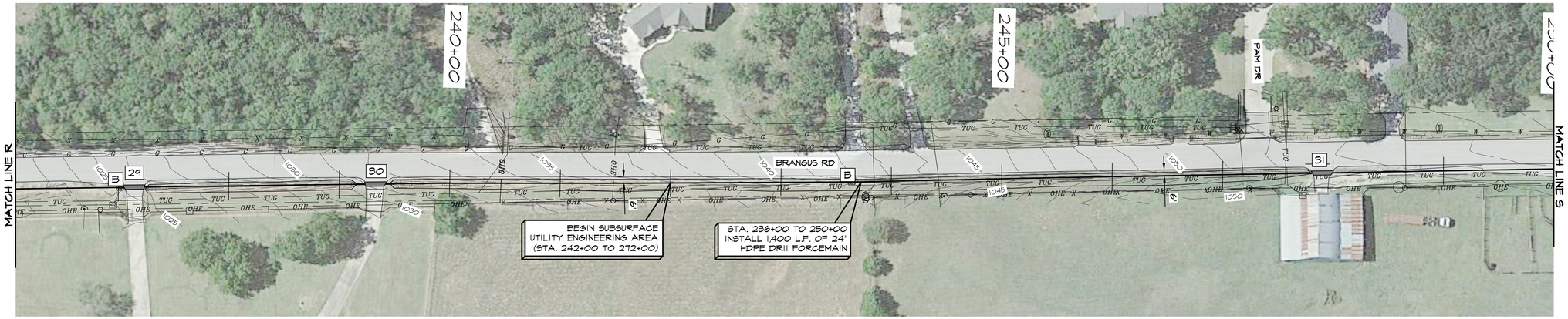

LEGEND

- PROPOSED 24" FORCEMAIN
- PROPOSED BORE
- OPTIONAL BORE
- PROPOSED REMOVE/REPLACE (SEE QUANTITIES)
- XXX — EXISTING CONTOUR LINES
- W — EXISTING WATER LINE
- OHE — EXISTING ELECTRIC LINE
- SS — EXISTING SEWER LINE
- G — EXISTING GAS LINE
- TUG — EXISTING TELEPHONE LINE
- EXISTING RIGHT-OF-WAY
- SUE — SUBSURFACE UTILITY ENGINEERING (CRITICAL LOCATE AREA)
- PROPOSED COMBINATION ARV
- EXISTING SIGN
- EXISTING MAILBOX
- EXISTING WATER METER
- EXISTING FIRE HYDRANT
- EXISTING GATE VALVE
- EXISTING POWER POLE
- EXISTING LIGHT POLE
- EXISTING GUY
- EXISTING MANHOLE
- EXISTING GAS METER
- EXISTING TPED
- EXISTING TREE

PROFILE SCALE
1"=50' HOR
1"=10' VERT

REMOVE & REPLACE QUANTITIES				
SYM.	ASPHALT	CULVERT	CULVERT LENGTH	MAILBOXES
29	18 L.F.	15" CMP	24 L.F.	
30	18 L.F.	18" CMP	36 L.F.	
31	18 L.F.	12" CMP	22 L.F.	
B				2

NOTES:
1. QUANTITIES LISTED REPRESENT AN APPROXIMATION OF THE LINEAR FEET OF REMOVE AND REPLACE REQUIRED. IT IS THE CONTRACTORS RESPONSIBILITY TO DETERMINE THE WIDTH AND CORRESPONDING ACTUAL QUANTITIES REQUIRED.
2. SEE DETAILS SHEETS FOR TYPICAL SECTIONS.
3. CULVERT REPLACEMENT INCLUDES LIKE-KIND END SECTIONS WHERE PRESENT. FIELD VERIFY PRIOR TO BID.
4. SIGN AND MAILBOX FINAL LOCATION TO BE FIELD DETERMINED.
5. ALL COSTS TO BE INCLUDED IN "SEWERMAIN RESTORATION" BID ITEM.

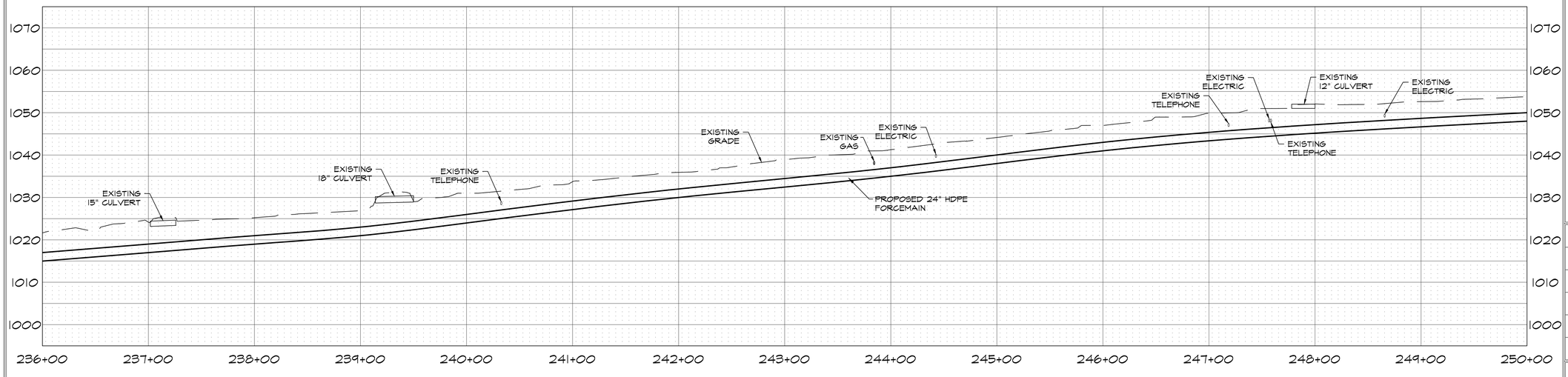

REGISTERED PROFESSIONAL ENGINEER
06/23/22
BRANDON WALL
21108
OKLAHOMA

WALL ENGINEERING
223 N. WASHINGTON, DURANT, OK 74701
OKLAHOMA CA #5413 EXP. JUNE 30, 2023

SUBMITTAL / REVISIONS:

DATE	BY	SUBMITTAL / REVISION
03/22	TL	ODEQ SUBMITTAL
06/22	TL	ISSUED FOR BIDDING

SHAWNEE MUNICIPAL AUTHORITY
CONVEYANCE - FORCEMAIN & DISCHARGE
SHAWNEE, OKLAHOMA

24" FORCEMAIN
STA. 236+00 TO 250+00

PROJECT NO.
SHN-20-01
DATE
06/22
DRAWN BY:
TL
CHECKED BY:
BW
REVIEWED BY:
DBW
SCALE:
1"=50'

BAR IS ONE INCH ON ORIGINAL DRAWING
0" 1"
IF NOT ONE INCH ON THIS SHEET, ADJUST SCALES ACCORDINGLY

SHEET
21

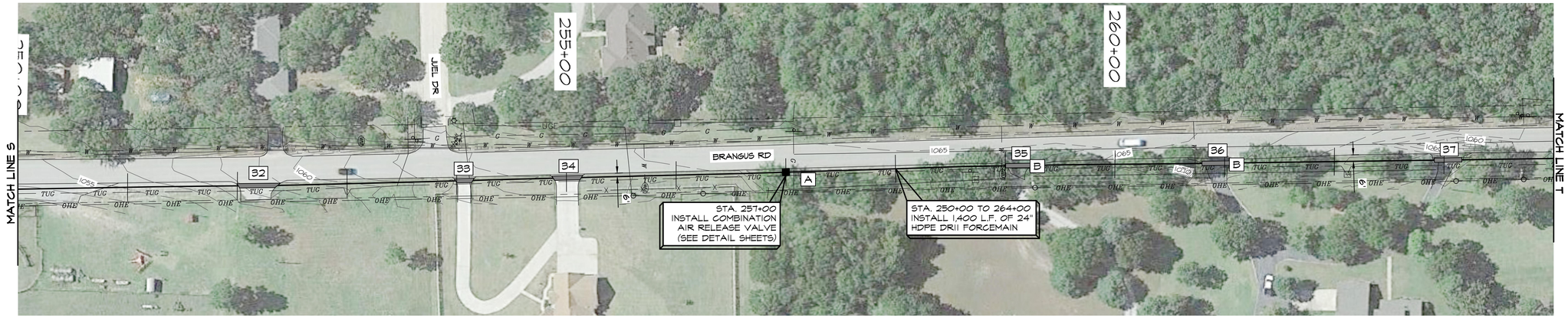

LEGEND

- PROPOSED 24" FORCEMAIN
- PROPOSED BORE
- OPTIONAL BORE
- PROPOSED REMOVE/REPLACE (SEE QUANTITIES)
- XXX — EXISTING CONTOUR LINES
- W — EXISTING WATER LINE
- OHE — EXISTING ELECTRIC LINE
- SS — EXISTING SEWER LINE
- G — EXISTING GAS LINE
- TUG — EXISTING TELEPHONE LINE
- EXISTING RIGHT-OF-WAY
- SUE — SUBSURFACE UTILITY ENGINEERING (CRITICAL LOCATE AREA)
- PROPOSED COMBINATION ARV
- EXISTING SIGN
- MB — EXISTING MAILBOX
- WM — EXISTING WATER METER
- EXISTING FIRE HYDRANT
- EXISTING GATE VALVE
- EXISTING POWER POLE
- EXISTING LIGHT POLE
- EXISTING GUY
- S — EXISTING MANHOLE
- G — EXISTING GAS METER
- T — EXISTING TPED
- EXISTING TREE

PROFILE SCALE
1"=50' HOR
1"=10' VERT

REMOVE & REPLACE QUANTITIES

SYM.	ASPHALT	CONCRETE	CULVERT	CULVERT LENGTH	SIGNS	MAILBOXES
32	36 L.F.					
33		16 L.F.	12" CMP	20 L.F.		
34		26 L.F.				
35	27 L.F.					
36	27 L.F.					
37	25 L.F.		12" CMP	27 L.F.		
A					1	
B						2

NOTES:
1. QUANTITIES LISTED REPRESENT AN APPROXIMATION OF THE LINEAR FEET OF REMOVE AND REPLACE REQUIRED. IT IS THE CONTRACTORS RESPONSIBILITY TO DETERMINE THE WIDTH AND CORRESPONDING ACTUAL QUANTITIES REQUIRED.
2. SEE DETAILS SHEETS FOR TYPICAL SECTIONS.
3. CULVERT REPLACEMENT INCLUDES LIKE-KIND END SECTIONS WHERE PRESENT. FIELD VERIFY PRIOR TO BID.
4. SIGN AND MAILBOX FINAL LOCATION TO BE FIELD DETERMINED.
5. ALL COSTS TO BE INCLUDED IN "SEWERMAIN RESTORATION" BID ITEM.

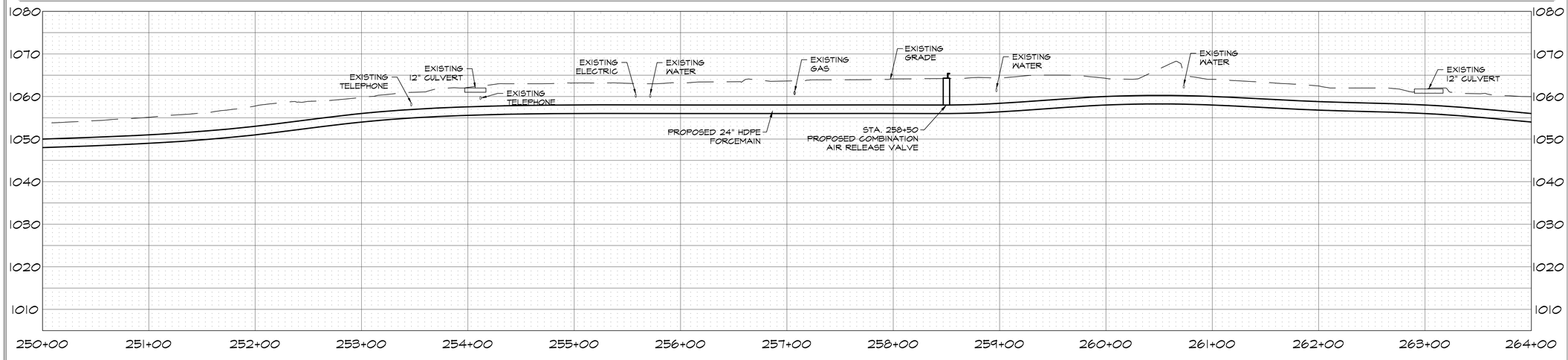



WALL ENGINEERING
223 N. WASHINGTON, DURANT, OK 74701
OKLAHOMA CA #5413 EXP. JUNE 30, 2023

SUBMITTAL / REVISIONS:

DATE	BY	SUBMITTAL / REVISION
03/22	TL	ODEQ SUBMITTAL
06/22	TL	ISSUED FOR BIDDING

SHAWNEE MUNICIPAL AUTHORITY
CONVEYANCE - FORCEMAIN & DISCHARGE
SHAWNEE, OKLAHOMA

24" FORCEMAIN PLAN & PROFILE
STA. 250+00 TO 264+00

PROJECT NO.
SHN-20-01
DATE
06/22
DRAWN BY:
TL
CHECKED BY:
BW
REVIEWED BY:
DBW
SCALE:
1"=50'

BAR IS ONE INCH ON ORIGINAL DRAWING
0" 1"
IF NOT ONE INCH ON THIS SHEET, ADJUST SCALES ACCORDINGLY

SHEET
22

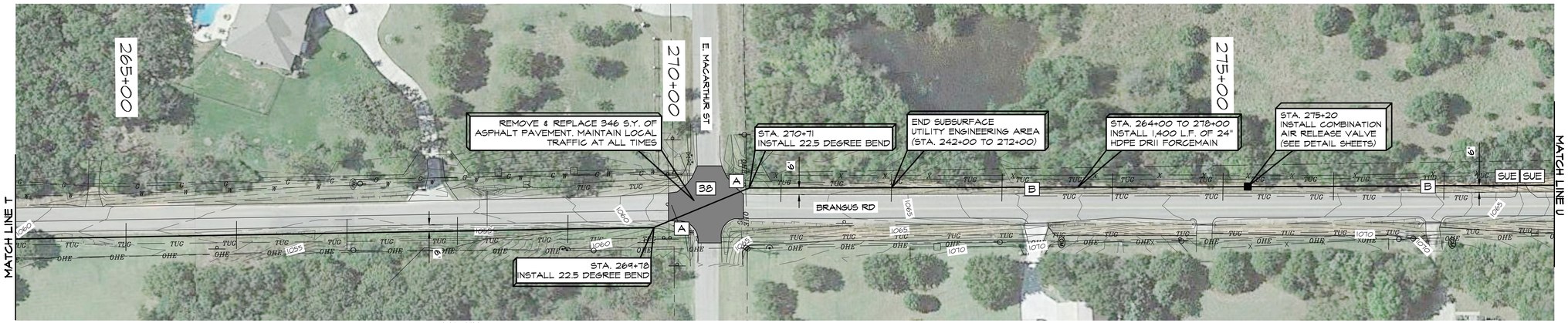

LEGEND

- PROPOSED 24" FORCEMAIN
- PROPOSED BORE
- OPTIONAL BORE
- PROPOSED REMOVE/REPLACE (SEE QUANTITIES)
- EXISTING CONTOUR LINES
- EXISTING WATER LINE
- EXISTING ELECTRIC LINE
- EXISTING SEWER LINE
- EXISTING GAS LINE
- EXISTING TELEPHONE LINE
- EXISTING RIGHT-OF-WAY
- SUBSURFACE UTILITY ENGINEERING (CRITICAL LOCATE AREA)
- PROPOSED COMBINATION ARV
- EXISTING SIGN
- EXISTING MAILBOX
- EXISTING WATER METER
- EXISTING FIRE HYDRANT
- EXISTING GATE VALVE
- EXISTING POWER POLE
- EXISTING LIGHT POLE
- EXISTING GUY
- EXISTING MANHOLE
- EXISTING GAS METER
- EXISTING TPED
- EXISTING TREE

PROFILE SCALE
1"=50' HOR
1"=10' VERT

REMOVE & REPLACE QUANTITIES			
SYM.	ASPHALT	SIGNS	MAILBOXES
38	346 S.Y.		
A		2	
B			2

NOTES:
1. QUANTITIES LISTED REPRESENT AN APPROXIMATION OF THE LINEAR FEET OF REMOVE AND REPLACE REQUIRED. IT IS THE CONTRACTORS RESPONSIBILITY TO DETERMINE THE WIDTH AND CORRESPONDING ACTUAL QUANTITIES REQUIRED.
2. SEE DETAILS SHEETS FOR TYPICAL SECTIONS.
3. CULVERT REPLACEMENT INCLUDES LIKE-KIND END SECTIONS WHERE PRESENT. FIELD VERIFY PRIOR TO BID.
4. SIGN AND MAILBOX FINAL LOCATION TO BE FIELD DETERMINED.
5. ALL COSTS TO BE INCLUDED IN "SEWERMAIN RESTORATION" BID ITEM.

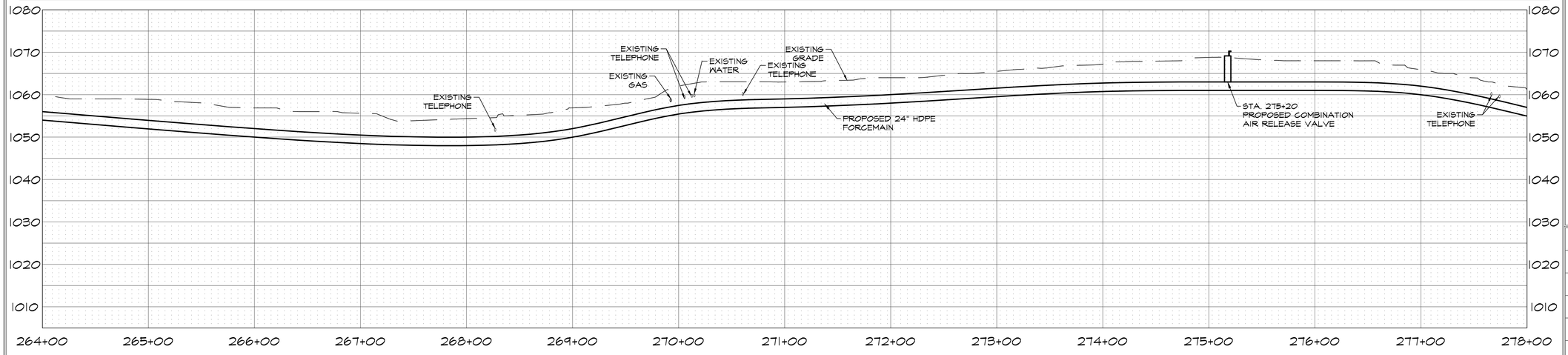

REGISTERED PROFESSIONAL ENGINEER
06/23/22
BRANDON WALL
21108
OKLAHOMA

WALL ENGINEERING
223 N. WASHINGTON, DURANT, OK 74701
OKLAHOMA CA #5413 EXP. JUNE 30, 2023

SUBMITTAL / REVISIONS:

DATE	BY	SUBMITTAL / REVISION
03/22	TL	ODEQ SUBMITTAL
06/22	TL	ISSUED FOR BIDDING

SHAWNEE MUNICIPAL AUTHORITY
CONVEYANCE - FORCEMAIN & DISCHARGE
SHAWNEE, OKLAHOMA

24" FORCEMAIN PLAN & PROFILE
STA. 264+00 TO 278+00

PROJECT NO.
SHN-20-01
DATE
06/22
DRAWN BY:
TL
CHECKED BY:
BW
REVIEWED BY:
DBW
SCALE:
1"=50'

BAR IS ONE INCH ON ORIGINAL DRAWING
0" 1"
IF NOT ONE INCH ON THIS SHEET, ADJUST SCALES ACCORDINGLY

SHEET
23



LEGEND

- PROPOSED 24" FORCEMAIN
- PROPOSED BORE
- OPTIONAL BORE
- PROPOSED REMOVE/REPLACE (SEE QUANTITIES)
- XXX — EXISTING CONTOUR LINES
- W — EXISTING WATER LINE
- OHE — EXISTING ELECTRIC LINE
- SS — EXISTING SEWER LINE
- G — EXISTING GAS LINE
- TUG — EXISTING TELEPHONE LINE
- EXISTING RIGHT-OF-WAY
- SUE — SUBSURFACE UTILITY ENGINEERING (CRITICAL LOCATE AREA)
- PROPOSED COMBINATION ARV
- EXISTING SIGN
- MB — EXISTING MAILBOX
- EXISTING WATER METER
- EXISTING FIRE HYDRANT
- EXISTING GATE VALVE
- EXISTING POWER POLE
- EXISTING LIGHT POLE
- EXISTING GUY
- S — EXISTING MANHOLE
- G — EXISTING GAS METER
- T — EXISTING TPED
- EXISTING TREE

PROFILE SCALE
1"=50' HOR
1"=10' VERT

REMOVE & REPLACE QUANTITIES					
SYM.	GRAVEL	CULVERT	CULVERT LENGTH	SIGNS	MAILBOXES
39	15 L.F.	15" CMP	24 L.F.		
40	17 L.F.	12" CMP	23 L.F.		
A				1	
B					7

NOTES:
1. QUANTITIES LISTED REPRESENT AN APPROXIMATION OF THE LINEAR FEET OF REMOVE AND REPLACE REQUIRED. IT IS THE CONTRACTORS RESPONSIBILITY TO DETERMINE THE WIDTH AND CORRESPONDING ACTUAL QUANTITIES REQUIRED.
2. SEE DETAILS SHEETS FOR TYPICAL SECTIONS.
3. CULVERT REPLACEMENT INCLUDES LIKE-KIND END SECTIONS WHERE PRESENT. FIELD VERIFY PRIOR TO BID.
4. SIGN AND MAILBOX FINAL LOCATION TO BE FIELD DETERMINED.
5. ALL COSTS TO BE INCLUDED IN "SEWERMAIN RESTORATION" BID ITEM.

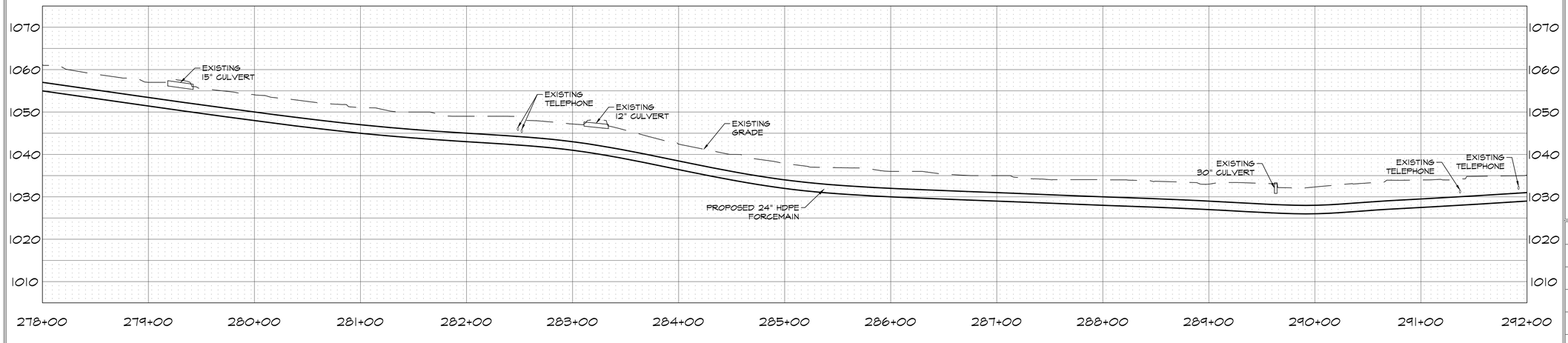

WALL ENGINEERING
223 N. WASHINGTON, DURANT, OK 74701
OKLAHOMA CA #5413 EXP. JUNE 30, 2023

SUBMITTAL / REVISIONS:

DATE	BY	SUBMITTAL / REVISION
03/22	TL	ODEQ SUBMITTAL
06/22	TL	ISSUED FOR BIDDING

SHAWNEE MUNICIPAL AUTHORITY
CONVEYANCE - FORCEMAIN & DISCHARGE
SHAWNEE, OKLAHOMA

24" FORCEMAIN PLAN & PROFILE
STA. 278+00 TO 292+00

PROJECT NO.
SHN-20-01
DATE
06/22
DRAWN BY:
TL
CHECKED BY:
BW
REVIEWED BY:
DBW
SCALE:
1"=50'

BAR IS ONE INCH ON ORIGINAL DRAWING
0" 1"
IF NOT ONE INCH ON THIS SHEET, ADJUST SCALES ACCORDINGLY

SHEET
24

REGISTERED PROFESSIONAL ENGINEER
6/23/22
BRANDON WALL
21108
OKLAHOMA

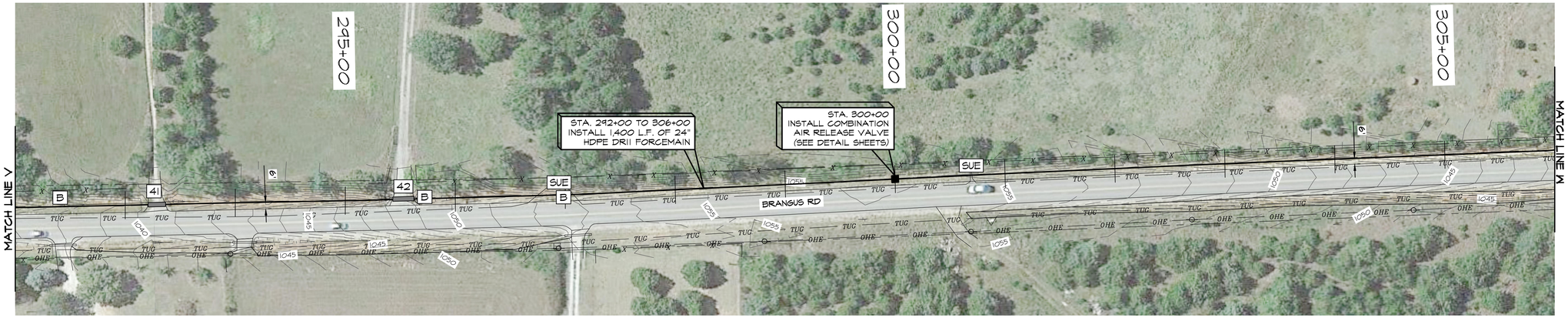

LEGEND

- PROPOSED 24" FORCEMAIN
- PROPOSED BORE
- OPTIONAL BORE
- PROPOSED REMOVE/REPLACE (SEE QUANTITIES)
- XXX EXISTING CONTOUR LINES
- W EXISTING WATER LINE
- OHE EXISTING ELECTRIC LINE
- SS EXISTING SEWER LINE
- G EXISTING GAS LINE
- TUG EXISTING TELEPHONE LINE
- EXISTING RIGHT-OF-WAY
- SUE SUBSURFACE UTILITY ENGINEERING (CRITICAL LOCATE AREA)
- PROPOSED COMBINATION ARV
- EXISTING SIGN
- MB EXISTING MAILBOX
- WM EXISTING WATER METER
- EXISTING FIRE HYDRANT
- EXISTING GATE VALVE
- EXISTING POWER POLE
- EXISTING LIGHT POLE
- EXISTING GUY
- S EXISTING MANHOLE
- G EXISTING GAS METER
- T EXISTING TPED
- EXISTING TREE

PROFILE SCALE
1"=50' HOR
1"=10' VERT

REMOVE & REPLACE QUANTITIES				
SYM.	GRAVEL	CULVERT	CULVERT LENGTH	MAILBOXES
41	16 L.F.			
42	19 L.F.	18" CMP	24 L.F.	
B				3

NOTES:
1. QUANTITIES LISTED REPRESENT AN APPROXIMATION OF THE LINEAR FEET OF REMOVE AND REPLACE REQUIRED. IT IS THE CONTRACTORS RESPONSIBILITY TO DETERMINE THE WIDTH AND CORRESPONDING ACTUAL QUANTITIES REQUIRED.
2. SEE DETAILS SHEETS FOR TYPICAL SECTIONS.
3. CULVERT REPLACEMENT INCLUDES LIKE-KIND END SECTIONS WHERE PRESENT. FIELD VERIFY PRIOR TO BID.
4. SIGN AND MAILBOX FINAL LOCATION TO BE FIELD DETERMINED.
5. ALL COSTS TO BE INCLUDED IN "SEWERMAIN RESTORATION" BID ITEM.

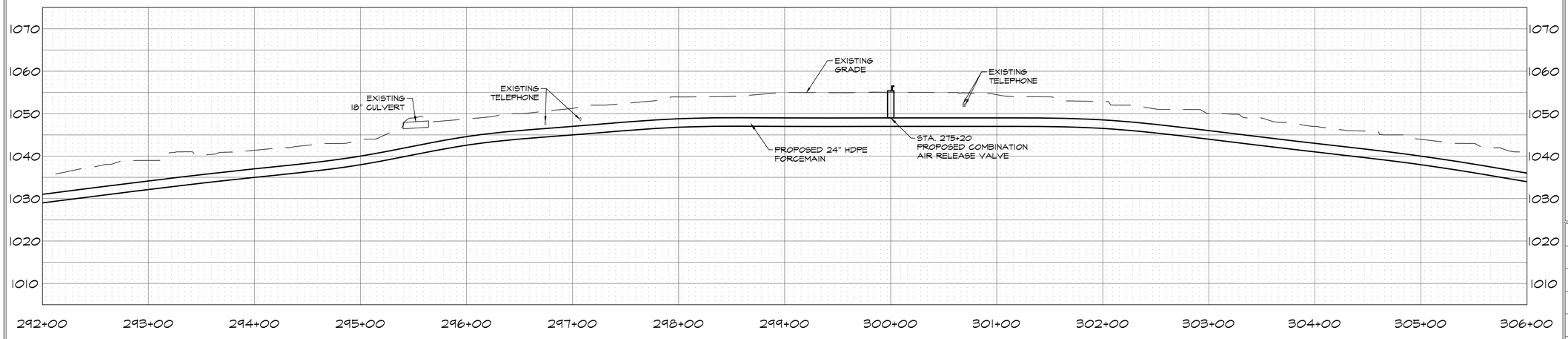

WALL ENGINEERING
223 N. WASHINGTON, DURANT, OK 74701
OKLAHOMA CA #5413 EXP. JUNE 30, 2023

SUBMITTAL / REVISIONS:

DATE	BY	SUBMITTAL / REVISION
03/22	TL	ODEQ SUBMITTAL
06/22	TL	ISSUED FOR BIDDING

SHAWNEE MUNICIPAL AUTHORITY
CONVEYANCE - FORCEMAIN & DISCHARGE
SHAWNEE, OKLAHOMA

24" FORCEMAIN PLAN & PROFILE
STA. 292+00 TO 306+00

PROJECT NO.
SHN-20-01
DATE
06/22
DRAWN BY:
TL
CHECKED BY:
BW
REVIEWED BY:
DBW
SCALE:
1"=50'

BAR IS ONE INCH ON ORIGINAL DRAWING
0" 1"
IF NOT ONE INCH ON THIS SHEET, ADJUST SCALES ACCORDINGLY

REGISTERED PROFESSIONAL ENGINEER
06/24/22
BRANDON WALL
21108
OKLAHOMA

SHEET
25



LEGEND

- PROPOSED 24" FORCEMAIN
- PROPOSED BORE
- OPTIONAL BORE
- PROPOSED REMOVE/REPLACE (SEE QUANTITIES)
- EXISTING CONTOUR LINES
- EXISTING WATER LINE
- EXISTING ELECTRIC LINE
- EXISTING SEWER LINE
- EXISTING GAS LINE
- EXISTING TELEPHONE LINE
- EXISTING RIGHT-OF-WAY
- SUE — SUBSURFACE UTILITY ENGINEERING (CRITICAL LOCATE AREA)
- PROPOSED COMBINATION ARV
- EXISTING SIGN
- EXISTING MAILBOX
- EXISTING WATER METER
- EXISTING FIRE HYDRANT
- EXISTING GATE VALVE
- EXISTING POWER POLE
- EXISTING LIGHT POLE
- EXISTING GUY
- EXISTING MANHOLE
- EXISTING GAS METER
- EXISTING TPED
- EXISTING TREE

PROFILE SCALE
1"=50' HOR
1"=10' VERT

REMOVE & REPLACE QUANTITIES				
SYM.	GRAVEL	CULVERT	CULVERT LENGTH	MAILBOXES
43	17 L.F.	12" CMP	30 L.F.	
44	19 L.F.			
B				1

NOTES:
1. QUANTITIES LISTED REPRESENT AN APPROXIMATION OF THE LINEAR FEET OF REMOVE AND REPLACE REQUIRED. IT IS THE CONTRACTORS RESPONSIBILITY TO DETERMINE THE WIDTH AND CORRESPONDING ACTUAL QUANTITIES REQUIRED.
2. SEE DETAILS SHEETS FOR TYPICAL SECTIONS.
3. CULVERT REPLACEMENT INCLUDES LIKE-KIND END SECTIONS WHERE PRESENT. FIELD VERIFY PRIOR TO BID.
4. SIGN AND MAILBOX FINAL LOCATION TO BE FIELD DETERMINED.
5. ALL COSTS TO BE INCLUDED IN "SEWERMAIN RESTORATION" BID ITEM.

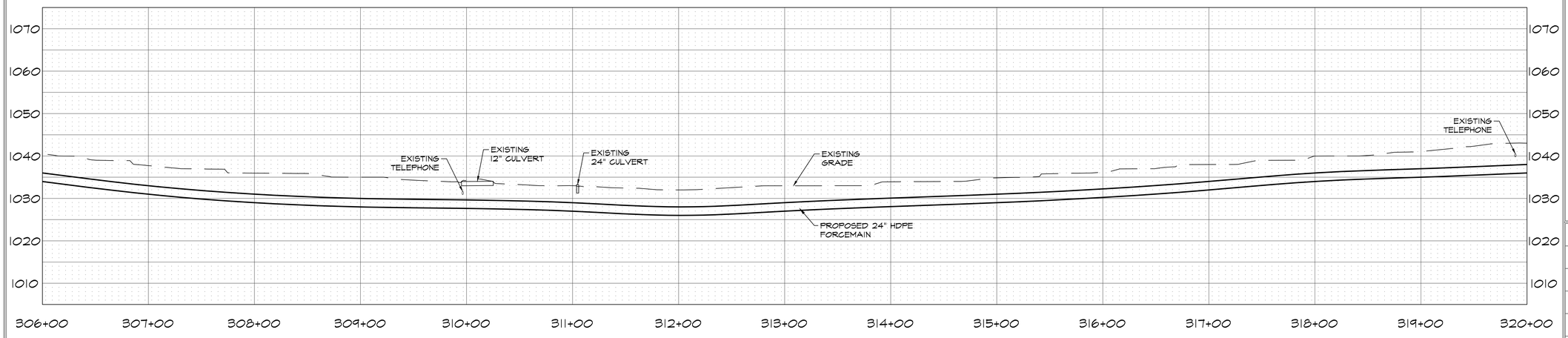

REGISTERED PROFESSIONAL ENGINEER
06/24/22
BRANDON WALL
21108
OKLAHOMA

WALL ENGINEERING
223 N. WASHINGTON, DURANT, OK 74701
OKLAHOMA CA #5413 EXP. JUNE 30, 2023

SUBMITTAL / REVISIONS:

DATE	BY	SUBMITTAL / REVISION
03/22	TL	ODEQ SUBMITTAL
06/22	TL	ISSUED FOR BIDDING

SHAWNEE MUNICIPAL AUTHORITY
CONVEYANCE - FORCEMAIN & DISCHARGE
SHAWNEE, OKLAHOMA

24" FORCEMAIN PLAN & PROFILE
STA. 306+00 TO 320+00

PROJECT NO.
SHN-20-01
DATE
06/22
DRAWN BY:
TL
CHECKED BY:
BW
REVIEWED BY:
DBW
SCALE:
1"=50'

BAR IS ONE INCH ON ORIGINAL DRAWING
0" 1"
IF NOT ONE INCH ON THIS SHEET, ADJUST SCALES ACCORDINGLY

SHEET
26

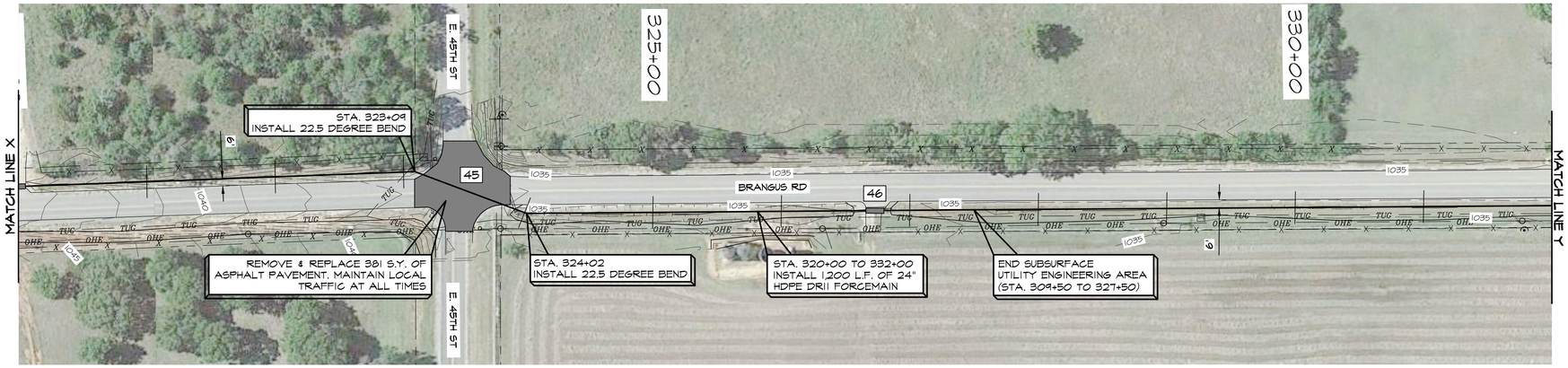

PROFILE SCALE
1"=50' HOR
1"=10' VERT

PROPOSED 24" FORCEMAIN
PROPOSED BORE
OPTIONAL BORE
PROPOSED REMOVE/REPLACE (SEE QUANTITIES)
XXX EXISTING CONTOUR LINES
W EXISTING WATER LINE
OHE EXISTING ELECTRIC LINE
SS EXISTING SEWER LINE
G EXISTING GAS LINE
TUG EXISTING TELEPHONE LINE
EXISTING RIGHT-OF-WAY

LEGEND

SUE SUBSURFACE UTILITY ENGINEERING (CRITICAL LOCATE AREA)
PROPOSED COMBINATION ARV
EXISTING SIGN
MB EXISTING MAILBOX
WM EXISTING WATER METER
EXISTING FIRE HYDRANT
EXISTING GATE VALVE
EXISTING POWER POLE
EXISTING LIGHT POLE
EXISTING GUY
S EXISTING MANHOLE
G EXISTING GAS METER
T EXISTING TPED
EXISTING TREE

REMOVE & REPLACE QUANTITIES				
SYM.	GRAVEL	ASPHALT	CULVERT	CULVERT LENGTH
45		381 S.Y.	(2) 18" STL	(2) 40 L.F.
46	14 L.F.		18" CMP	30 L.F.

NOTES:
1. QUANTITIES LISTED REPRESENT AN APPROXIMATION OF THE LINEAR FEET OF REMOVE AND REPLACE REQUIRED. IT IS THE CONTRACTORS RESPONSIBILITY TO DETERMINE THE WIDTH AND CORRESPONDING ACTUAL QUANTITIES REQUIRED.
2. SEE DETAILS SHEETS FOR TYPICAL SECTIONS.
3. CULVERT REPLACEMENT INCLUDES LIKE-KIND END SECTIONS WHERE PRESENT. FIELD VERIFY PRIOR TO BID.
4. SIGN AND MAILBOX FINAL LOCATION TO BE FIELD DETERMINED.
5. ALL COSTS TO BE INCLUDED IN "SEWERMAIN RESTORATION" BID ITEM.

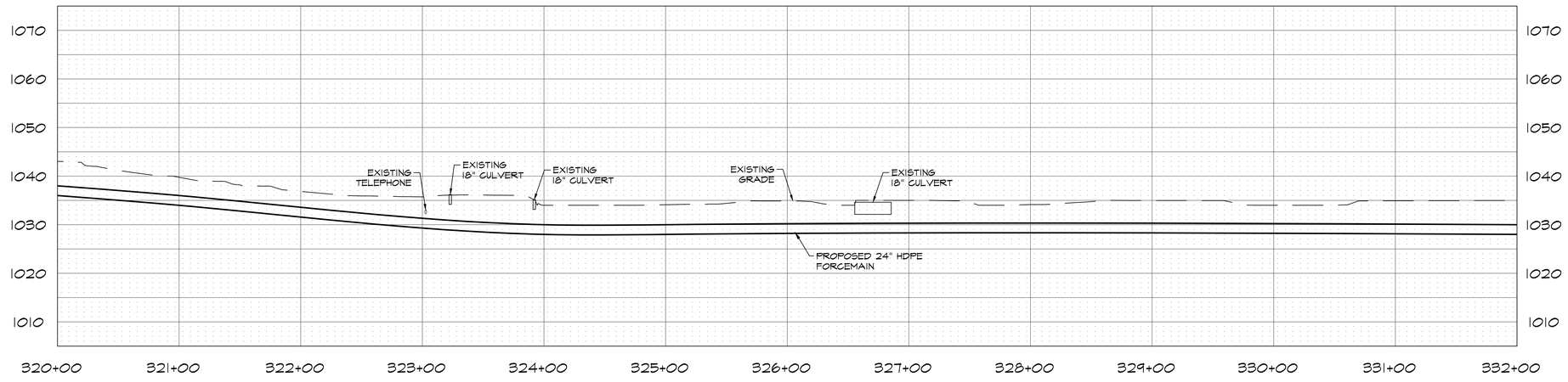

REGISTERED PROFESSIONAL ENGINEER
06/24/22
BRANDON WALL
21108
OKLAHOMA

WALL ENGINEERING
223 N. WASHINGTON, DURANT, OK 74701
OKLAHOMA CA #5413 EXP. JUNE 30, 2023

SUBMITTAL / REVISIONS:

DATE	BY	SUBMITTAL / REVISION
03/22	TL	ODEQ SUBMITTAL
06/22	TL	ISSUED FOR BIDDING

SHAWNEE MUNICIPAL AUTHORITY
CONVEYANCE - FORCEMAIN & DISCHARGE
SHAWNEE, OKLAHOMA

24" FORCEMAIN PLAN & PROFILE
STA. 320+00 TO 332+00

PROJECT NO.
SHN-20-01
DATE
06/22
DRAWN BY:
TL
CHECKED BY:
BW
REVIEWED BY:
DBW
SCALE:
1"=50'

BAR IS ONE INCH ON ORIGINAL DRAWING
0" 1"
IF NOT ONE INCH ON THIS SHEET, ADJUST SCALES ACCORDINGLY

SHEET
27

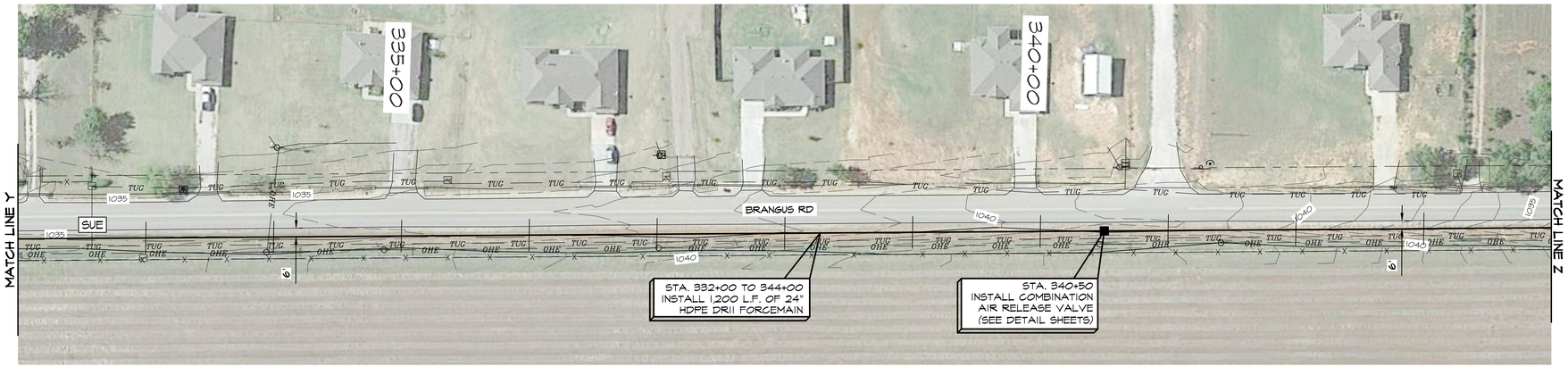

LEGEND

- PROPOSED 24" FORCEMAIN
- PROPOSED BORE
- OPTIONAL BORE
- PROPOSED REMOVE/REPLACE (SEE QUANTITIES)
- EXISTING CONTOUR LINES
- EXISTING WATER LINE
- EXISTING ELECTRIC LINE
- EXISTING SEWER LINE
- EXISTING GAS LINE
- EXISTING TELEPHONE LINE
- EXISTING RIGHT-OF-WAY
- SUE — SUBSURFACE UTILITY ENGINEERING (CRITICAL LOCATE AREA)
- PROPOSED COMBINATION ARV
- EXISTING SIGN
- EXISTING MAILBOX
- EXISTING WATER METER
- EXISTING FIRE HYDRANT
- EXISTING GATE VALVE
- EXISTING POWER POLE
- EXISTING LIGHT POLE
- EXISTING GUY
- EXISTING MANHOLE
- EXISTING GAS METER
- EXISTING TPED
- EXISTING TREE

PROFILE SCALE
1"=50' HOR
1"=10' VERT

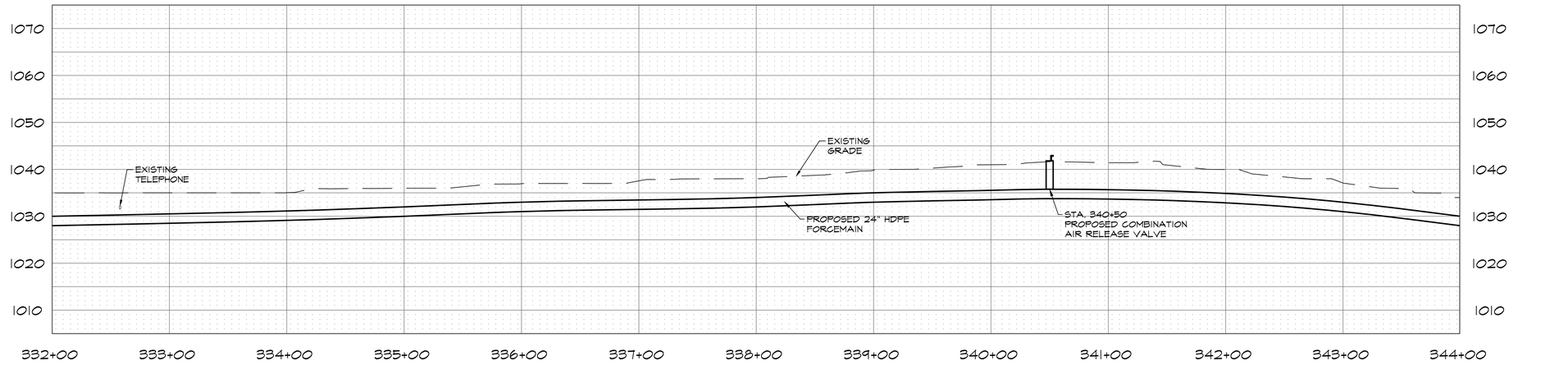

REGISTERED PROFESSIONAL ENGINEER
06/24/22
BRANDON WALL
21108
OKLAHOMA

WALL ENGINEERING
223 N. WASHINGTON, DURANT, OK 74701
OKLAHOMA CA #5413 EXP. JUNE 30, 2023

SUBMITTAL / REVISIONS:

DATE	BY	SUBMITTAL / REVISION
03/22	TL	ODEQ SUBMITTAL
06/22	TL	ISSUED FOR BIDDING

SHAWNEE MUNICIPAL AUTHORITY
CONVEYANCE - FORCEMAIN & DISCHARGE
SHAWNEE, OKLAHOMA

24" FORCEMAIN PLAN & PROFILE
STA. 332+00 TO 344+00

PROJECT NO.
SHN-20-01
DATE
06/22
DRAWN BY:
TL
CHECKED BY:
BW
REVIEWED BY:
DBW
SCALE:
1"=50'

BAR IS ONE INCH ON ORIGINAL DRAWING
0" 1"
IF NOT ONE INCH ON THIS SHEET, ADJUST SCALES ACCORDINGLY

SHEET
28

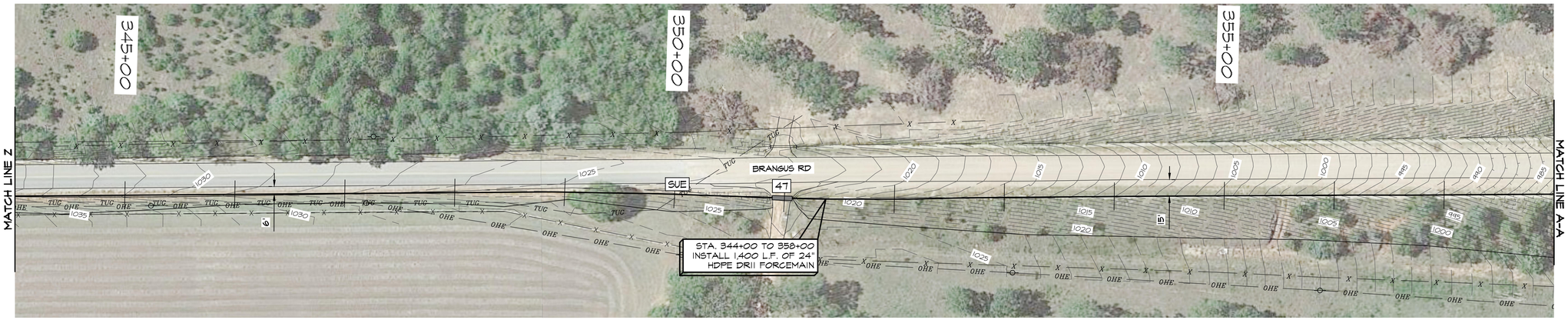

LEGEND

- PROPOSED 24" FORCEMAIN
- PROPOSED BORE
- OPTIONAL BORE
- PROPOSED REMOVE/REPLACE (SEE QUANTITIES)
- XXX — EXISTING CONTOUR LINES
- W — EXISTING WATER LINE
- OHE — EXISTING ELECTRIC LINE
- SS — EXISTING SEWER LINE
- G — G — EXISTING GAS LINE
- TUG — EXISTING TELEPHONE LINE
- — — — EXISTING RIGHT-OF-WAY
- SUE — SUBSURFACE UTILITY ENGINEERING (CRITICAL LOCATE AREA)
- PROPOSED COMBINATION ARV
- EXISTING SIGN
- EXISTING MAILBOX
- EXISTING WATER METER
- EXISTING FIRE HYDRANT
- EXISTING GATE VALVE
- EXISTING POWER POLE
- EXISTING LIGHT POLE
- EXISTING GUY
- EXISTING MANHOLE
- EXISTING GAS METER
- EXISTING TPED
- EXISTING TREE

PROFILE SCALE
1"=50' HOR
1"=10' VERT

REMOVE & REPLACE QUANTITIES				
SYM.	GRAVEL	CULVERT	CULVERT LENGTH	SIGNS
47	18 L.F.	18" CMP	25 L.F.	
A				2

NOTES:
1. QUANTITIES LISTED REPRESENT AN APPROXIMATION OF THE LINEAR FEET OF REMOVE AND REPLACE REQUIRED. IT IS THE CONTRACTORS RESPONSIBILITY TO DETERMINE THE WIDTH AND CORRESPONDING ACTUAL QUANTITIES REQUIRED.
2. SEE DETAILS SHEETS FOR TYPICAL SECTIONS.
3. CULVERT REPLACEMENT INCLUDES LIKE-KIND END SECTIONS WHERE PRESENT. FIELD VERIFY PRIOR TO BID.
4. SIGN AND MAILBOX FINAL LOCATION TO BE FIELD DETERMINED.
5. ALL COSTS TO BE INCLUDED IN "SEWERMAIN RESTORATION" BID ITEM.

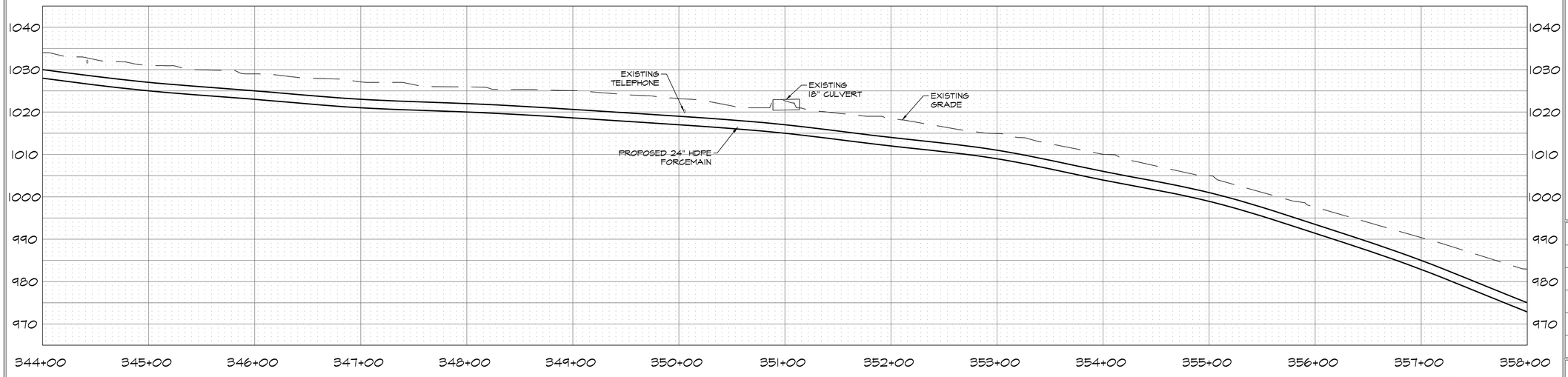

REGISTERED PROFESSIONAL ENGINEER
6/23/22
BRANDON WALL
21108
OKLAHOMA

WALL ENGINEERING
223 N. WASHINGTON, DURANT, OK 74701
OKLAHOMA CA #5413 EXP. JUNE 30, 2023

SUBMITTAL / REVISIONS:

DATE	BY	SUBMITTAL / REVISION
03/22	TL	ODEQ SUBMITTAL
06/22	TL	ISSUED FOR BIDDING

SHAWNEE MUNICIPAL AUTHORITY
CONVEYANCE - FORCEMAIN & DISCHARGE
SHAWNEE, OKLAHOMA

24" FORCEMAIN PLAN & PROFILE
STA. 344+00 TO 358+00

PROJECT NO.
SHN-20-01
DATE
06/22
DRAWN BY:
TL
CHECKED BY:
BW
REVIEWED BY:
DBW
SCALE:
1"=50'

BAR IS ONE INCH ON ORIGINAL DRAWING
0" 1"
IF NOT ONE INCH ON THIS SHEET, ADJUST SCALES ACCORDINGLY

SHEET
29

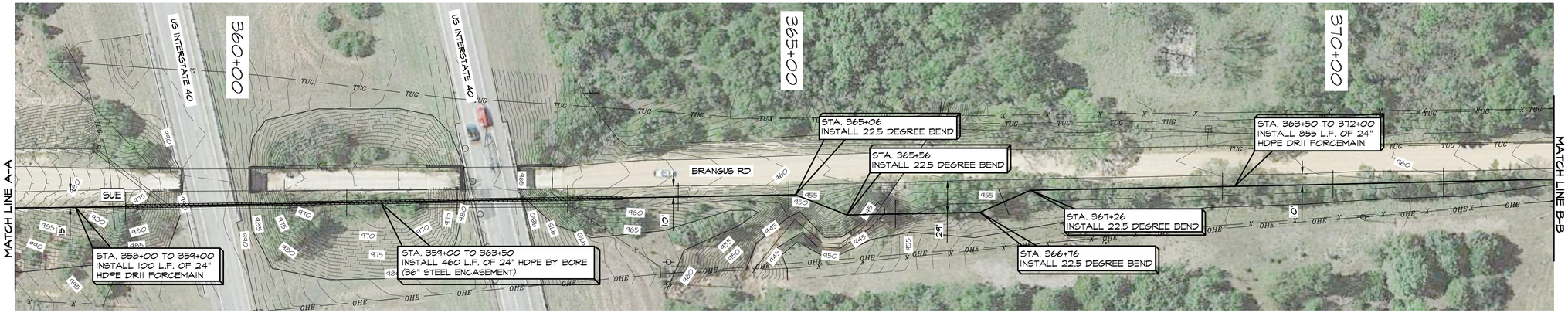

LEGEND

- PROPOSED 24" FORCEMAIN
- PROPOSED BORE
- OPTIONAL BORE
- PROPOSED REMOVE/REPLACE (SEE QUANTITIES)
- EXISTING CONTOUR LINES
- EXISTING WATER LINE
- EXISTING ELECTRIC LINE
- EXISTING SEWER LINE
- EXISTING GAS LINE
- EXISTING TELEPHONE LINE
- EXISTING RIGHT-OF-WAY
- SUBSURFACE UTILITY ENGINEERING (CRITICAL LOCATE AREA)
- PROPOSED COMBINATION ARV
- EXISTING SIGN
- EXISTING MAILBOX
- EXISTING WATER METER
- EXISTING FIRE HYDRANT
- EXISTING GATE VALVE
- EXISTING POWER POLE
- EXISTING LIGHT POLE
- EXISTING GUY
- EXISTING MANHOLE
- EXISTING GAS METER
- EXISTING TPED
- EXISTING TREE

PROFILE SCALE
1"=50' HOR
1"=10' VERT

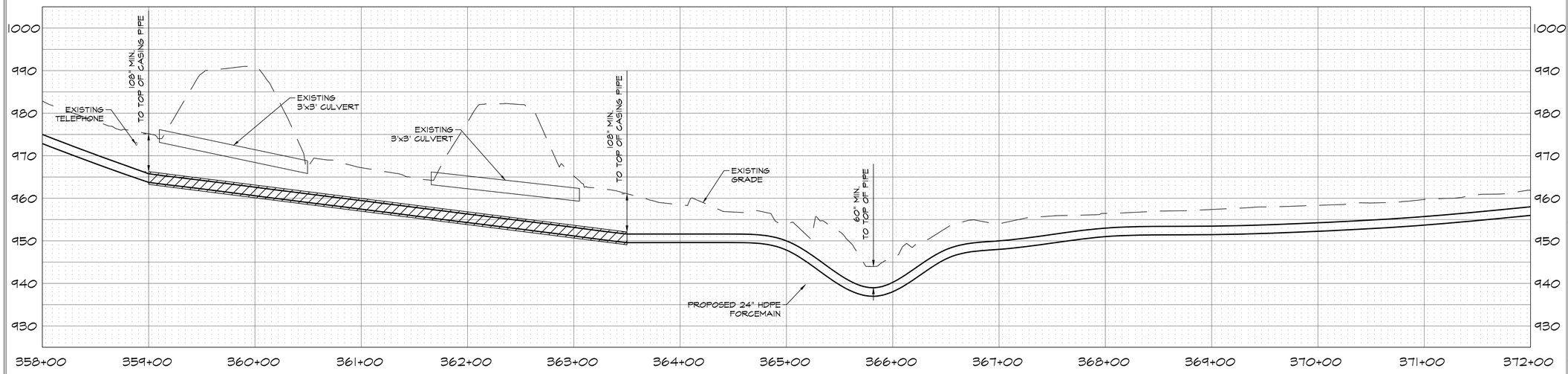



WALL ENGINEERING
223 N. WASHINGTON, DURANT, OK 74701
OKLAHOMA CA #5413 EXP. JUNE 30, 2023

SUBMITTAL / REVISIONS:

DATE	BY	SUBMITTAL / REVISION
03/22	TL	ODEQ SUBMITTAL
06/22	TL	ISSUED FOR BIDDING

SHAWNEE MUNICIPAL AUTHORITY
CONVEYANCE - FORCEMAIN & DISCHARGE
SHAWNEE, OKLAHOMA

24" FORCEMAIN PLAN & PROFILE
STA. 358+00 TO 372+00

PROJECT NO.
SHN-20-01
DATE
06/22
DRAWN BY:
TL
CHECKED BY:
BW
REVIEWED BY:
DBW
SCALE:
1"=50'

BAR IS ONE INCH ON ORIGINAL DRAWING
0" 1"
IF NOT ONE INCH ON THIS SHEET, ADJUST SCALES ACCORDINGLY

SHEET
30

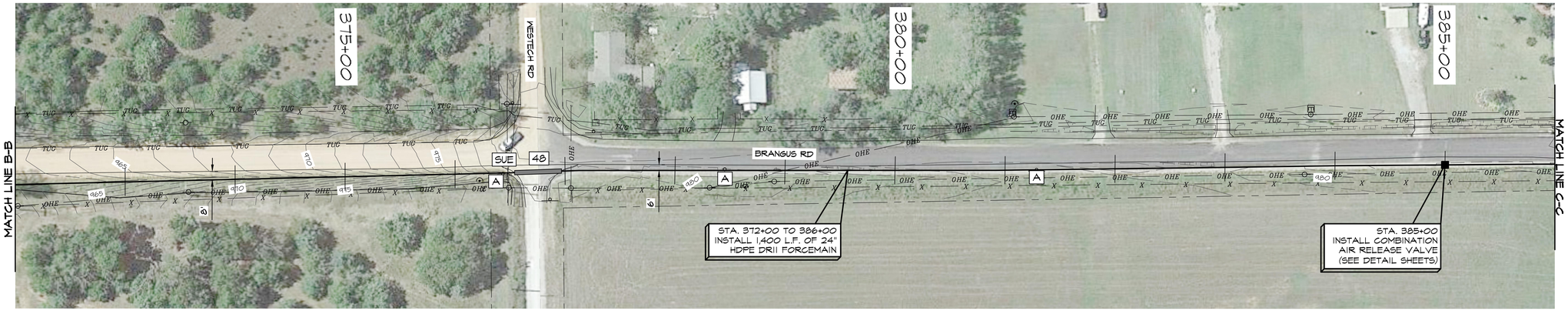

LEGEND

- PROPOSED 24" FORCEMAIN
- PROPOSED BORE
- OPTIONAL BORE
- PROPOSED REMOVE/REPLACE (SEE QUANTITIES)
- EXISTING CONTOUR LINES
- EXISTING WATER LINE
- EXISTING ELECTRIC LINE
- EXISTING SEWER LINE
- EXISTING GAS LINE
- EXISTING TELEPHONE LINE
- EXISTING RIGHT-OF-WAY
- SUE — SUBSURFACE UTILITY ENGINEERING (CRITICAL LOCATE AREA)
- PROPOSED COMBINATION ARV
- EXISTING SIGN
- MB — EXISTING MAILBOX
- WM — EXISTING WATER METER
- EXISTING FIRE HYDRANT
- EXISTING GATE VALVE
- EXISTING POWER POLE
- EXISTING LIGHT POLE
- EXISTING GUY
- S — EXISTING MANHOLE
- G — EXISTING GAS METER
- T — EXISTING TPED
- EXISTING TREE

PROFILE SCALE
1"=50' HOR
1"=10' VERT

REMOVE & REPLACE QUANTITIES		
SYM.	GRAVEL	SIGNS
48	45 L.F.	
A		3

NOTES:
1. QUANTITIES LISTED REPRESENT AN APPROXIMATION OF THE LINEAR FEET OF REMOVE AND REPLACE REQUIRED. IT IS THE CONTRACTORS RESPONSIBILITY TO DETERMINE THE WIDTH AND CORRESPONDING ACTUAL QUANTITIES REQUIRED.
2. SEE DETAILS SHEETS FOR TYPICAL SECTIONS.
3. CULVERT REPLACEMENT INCLUDES LIKE-KIND END SECTIONS WHERE PRESENT. FIELD VERIFY PRIOR TO BID.
4. SIGN AND MAILBOX FINAL LOCATION TO BE FIELD DETERMINED.
5. ALL COSTS TO BE INCLUDED IN "SEWERMAIN RESTORATION" BID ITEM.

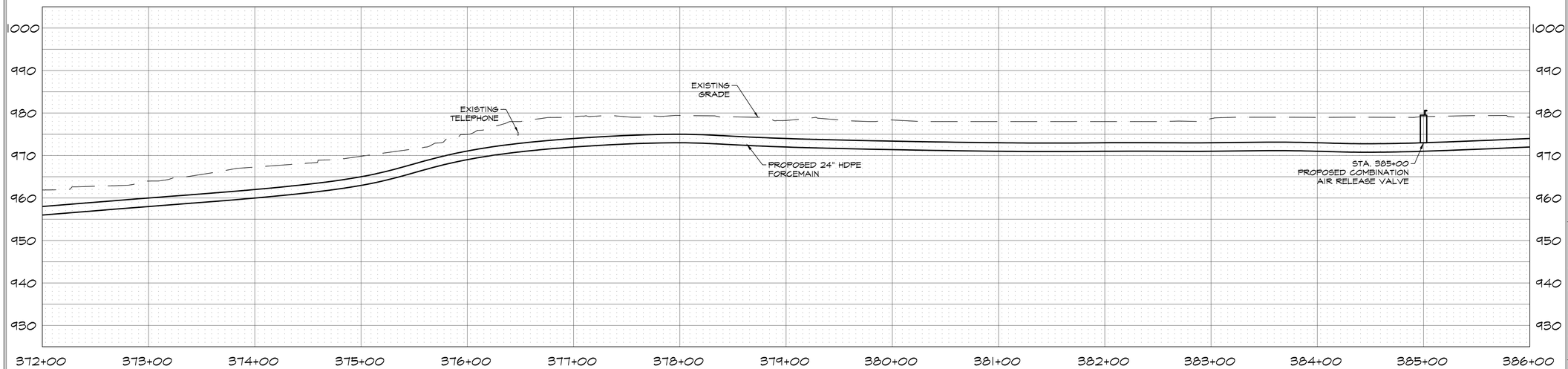

WALL ENGINEERING
223 N. WASHINGTON, DURANT, OK 74701
OKLAHOMA CA #5413 EXP. JUNE 30, 2023

SUBMITTAL / REVISIONS:

DATE	BY	SUBMITTAL / REVISION
03/22	TL	ODEQ SUBMITTAL
06/22	TL	ISSUED FOR BIDDING

SHAWNEE MUNICIPAL AUTHORITY
CONVEYANCE - FORCEMAIN & DISCHARGE
SHAWNEE, OKLAHOMA

24" FORCEMAIN PLAN & PROFILE
STA. 372+00 TO 386+00

PROJECT NO.
SHN-20-01
DATE
06/22
DRAWN BY:
TL
CHECKED BY:
BW
REVIEWED BY:
DBW
SCALE:
1"=50'

BAR IS ONE INCH ON ORIGINAL DRAWING
0" 1"
IF NOT ONE INCH ON THIS SHEET, ADJUST SCALES ACCORDINGLY

SHEET
31

REGISTERED PROFESSIONAL ENGINEER
06/24/22
BRANDON WALL
21108
OKLAHOMA



LEGEND

- PROPOSED 24" FORCEMAIN
- PROPOSED BORE
- OPTIONAL BORE
- PROPOSED REMOVE/REPLACE (SEE QUANTITIES)
- XXX — EXISTING CONTOUR LINES
- W — EXISTING WATER LINE
- OHE — EXISTING ELECTRIC LINE
- SS — EXISTING SEWER LINE
- G — EXISTING GAS LINE
- TUG — EXISTING TELEPHONE LINE
- EXISTING RIGHT-OF-WAY
- SUE — SUBSURFACE UTILITY ENGINEERING (CRITICAL LOCATE AREA)
- PROPOSED COMBINATION ARV
- EXISTING SIGN
- MB — EXISTING MAILBOX
- WM — EXISTING WATER METER
- EXISTING FIRE HYDRANT
- EXISTING GATE VALVE
- EXISTING POWER POLE
- EXISTING LIGHT POLE
- EXISTING GUY
- S — EXISTING MANHOLE
- G — EXISTING GAS METER
- T — EXISTING TPED
- EXISTING TREE

PROFILE SCALE
1"=50' HOR
1"=10' VERT

REMOVE & REPLACE QUANTITIES			
SYM.	GRAVEL	ASPHALT	SIGNS
49	22 L.F.		
50		25 L.F.	
A			2

NOTES:
1. QUANTITIES LISTED REPRESENT AN APPROXIMATION OF THE LINEAR FEET OF REMOVE AND REPLACE REQUIRED. IT IS THE CONTRACTORS RESPONSIBILITY TO DETERMINE THE WIDTH AND CORRESPONDING ACTUAL QUANTITIES REQUIRED.
2. SEE DETAILS SHEETS FOR TYPICAL SECTIONS.
3. CULVERT REPLACEMENT INCLUDES LIKE-KIND END SECTIONS WHERE PRESENT. FIELD VERIFY PRIOR TO BID.
4. SIGN AND MAILBOX FINAL LOCATION TO BE FIELD DETERMINED.
5. ALL COSTS TO BE INCLUDED IN "SEWERMAIN RESTORATION" BID ITEM.

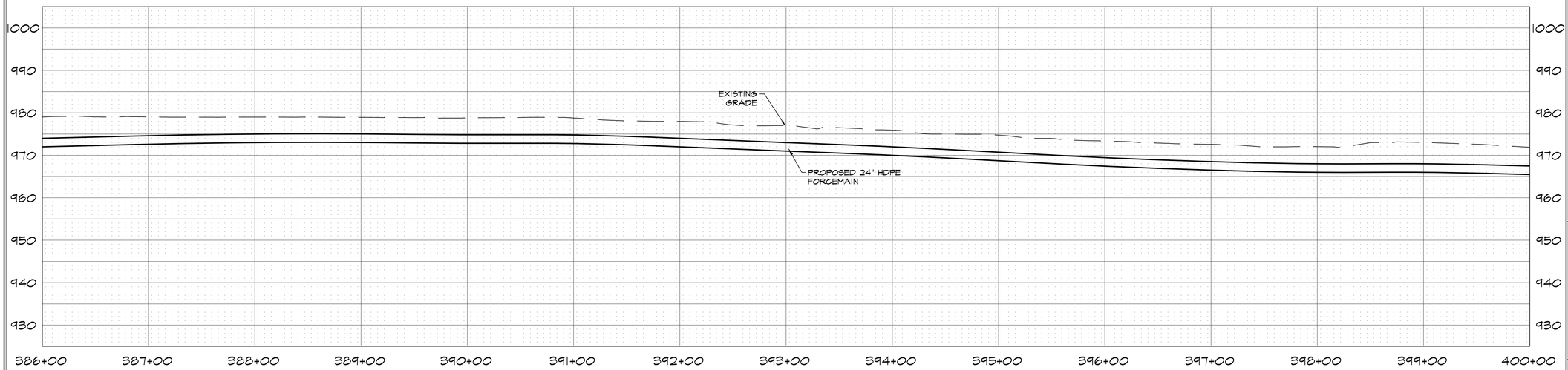

REGISTERED PROFESSIONAL ENGINEER
06/24/22
BRANDON WALL
21108
OKLAHOMA

WALL ENGINEERING
223 N. WASHINGTON, DURANT, OK 74701
OKLAHOMA CA #5413 EXP. JUNE 30, 2023

SUBMITTAL / REVISIONS:

DATE	BY	SUBMITTAL / REVISION
03/22	TL	ODEQ SUBMITTAL
06/22	TL	ISSUED FOR BIDDING

SHAWNEE MUNICIPAL AUTHORITY
CONVEYANCE - FORCEMAIN & DISCHARGE
SHAWNEE, OKLAHOMA

24" FORCEMAIN PLAN & PROFILE
STA. 386+00 TO 400+00

PROJECT NO.
SHN-20-01
DATE
06/22
DRAWN BY:
TL
CHECKED BY:
BW
REVIEWED BY:
DBW
SCALE:
1"=50'

BAR IS ONE INCH ON ORIGINAL DRAWING
0" 1"
IF NOT ONE INCH ON THIS SHEET, ADJUST SCALES ACCORDINGLY

SHEET
32



LEGEND

- PROPOSED 24" FORCEMAIN
- PROPOSED BORE
- OPTIONAL BORE
- PROPOSED REMOVE/REPLACE (SEE QUANTITIES)
- XXX — EXISTING CONTOUR LINES
- W — EXISTING WATER LINE
- OHE — EXISTING ELECTRIC LINE
- SS — EXISTING SEWER LINE
- G — EXISTING GAS LINE
- TUG — EXISTING TELEPHONE LINE
- EXISTING RIGHT-OF-WAY
- SUE — SUBSURFACE UTILITY ENGINEERING (CRITICAL LOCATE AREA)
- PROPOSED COMBINATION ARV
- EXISTING SIGN
- MB — EXISTING MAILBOX
- WM — EXISTING WATER METER
- EXISTING FIRE HYDRANT
- EXISTING GATE VALVE
- EXISTING POWER POLE
- EXISTING LIGHT POLE
- EXISTING GUY
- S — EXISTING MANHOLE
- G — EXISTING GAS METER
- T — EXISTING TPED
- EXISTING TREE

PROFILE SCALE
1"=50' HOR
1"=10' VERT

REMOVE & REPLACE QUANTITIES				
SYM.	GRAVEL	CULVERT	CULVERT LENGTH	MAILBOXES
51	22 L.F.	12" CMP	32 L.F.	
B				1

NOTES:
1. QUANTITIES LISTED REPRESENT AN APPROXIMATION OF THE LINEAR FEET OF REMOVE AND REPLACE REQUIRED. IT IS THE CONTRACTORS RESPONSIBILITY TO DETERMINE THE WIDTH AND CORRESPONDING ACTUAL QUANTITIES REQUIRED.
2. SEE DETAILS SHEETS FOR TYPICAL SECTIONS.
3. CULVERT REPLACEMENT INCLUDES LIKE-KIND END SECTIONS WHERE PRESENT. FIELD VERIFY PRIOR TO BID.
4. SIGN AND MAILBOX FINAL LOCATION TO BE FIELD DETERMINED.
5. ALL COSTS TO BE INCLUDED IN "SEWERMAIN RESTORATION" BID ITEM.

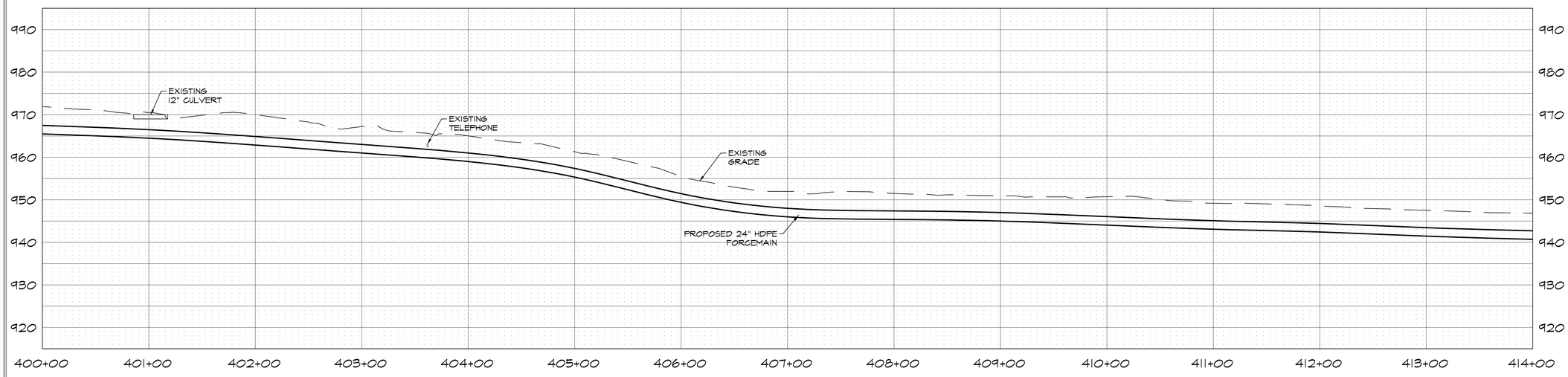

REGISTERED PROFESSIONAL ENGINEER
BRANDON WALL
21108
OKLAHOMA

WALL ENGINEERING
223 N. WASHINGTON, DURANT, OK 74701
OKLAHOMA CA #5413 EXP. JUNE 30, 2023

SUBMITTAL / REVISIONS:

DATE	BY	SUBMITTAL / REVISION
03/22	TL	ODEQ SUBMITTAL
06/22	TL	ISSUED FOR BIDDING

SHAWNEE MUNICIPAL AUTHORITY
CONVEYANCE - FORCEMAIN & DISCHARGE
SHAWNEE, OKLAHOMA

24" FORCEMAIN PLAN & PROFILE
STA. 400+00 TO 414+00

PROJECT NO.
SHN-20-01
DATE
06/22
DRAWN BY:
TL
CHECKED BY:
BW
REVIEWED BY:
DBW
SCALE:
1"=50'

BAR IS ONE INCH ON ORIGINAL DRAWING
0" 1"
IF NOT ONE INCH ON THIS SHEET, ADJUST SCALES ACCORDINGLY

SHEET
33



LEGEND

- PROPOSED 24" FORCEMAIN
- PROPOSED BORE
- OPTIONAL BORE
- PROPOSED REMOVE/REPLACE (SEE QUANTITIES)
- XXX — EXISTING CONTOUR LINES
- W — EXISTING WATER LINE
- OHE — EXISTING ELECTRIC LINE
- SS — EXISTING SEWER LINE
- G — EXISTING GAS LINE
- TUG — EXISTING TELEPHONE LINE
- EXISTING RIGHT-OF-WAY
- SUE — SUBSURFACE UTILITY ENGINEERING (CRITICAL LOCATE AREA)
- PROPOSED COMBINATION ARV
- EXISTING SIGN
- MB — EXISTING MAILBOX
- WM — EXISTING WATER METER
- EXISTING FIRE HYDRANT
- EXISTING GATE VALVE
- EXISTING POWER POLE
- EXISTING LIGHT POLE
- EXISTING GUY
- S — EXISTING MANHOLE
- G — EXISTING GAS METER
- T — EXISTING TPED
- EXISTING TREE

PROFILE SCALE
1"=50' HOR
1"=10' VERT

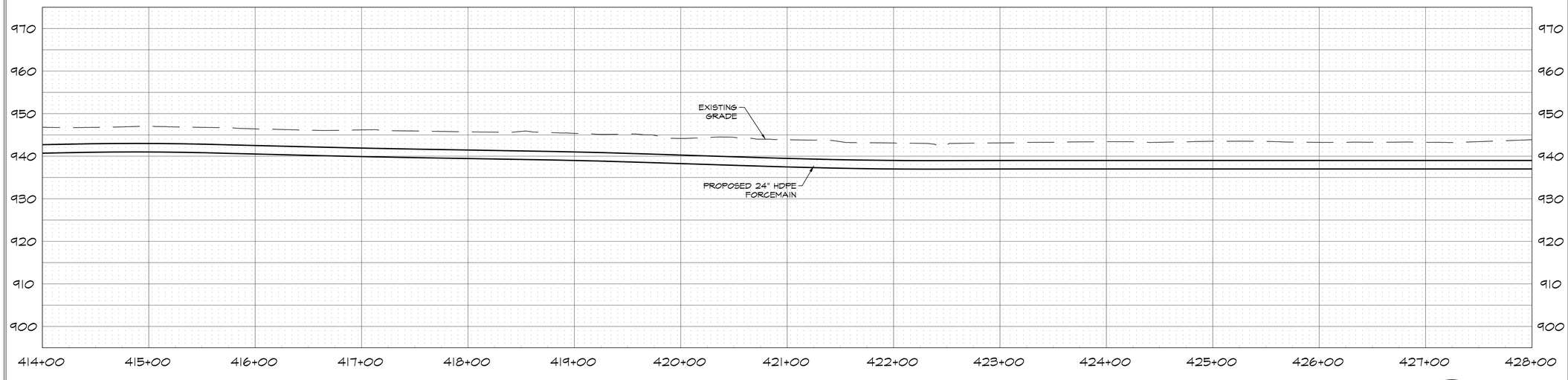

REGISTERED PROFESSIONAL ENGINEER
DEREK B. WALL
BRANDON WALL
21108
OKLAHOMA

WALL ENGINEERING
223 N. WASHINGTON, DURANT, OK 74701
OKLAHOMA CA #5413 EXP. JUNE 30, 2023

SUBMITTAL / REVISIONS:

DATE	BY	SUBMITTAL / REVISION
03/22	TL	ODEQ SUBMITTAL
06/22	TL	ISSUED FOR BIDDING

SHAWNEE MUNICIPAL AUTHORITY
CONVEYANCE - FORCEMAIN & DISCHARGE
SHAWNEE, OKLAHOMA

24" FORCEMAIN PLAN & PROFILE
STA. 414+00 TO 428+00

PROJECT NO.
SHN-20-01
DATE
06/22
DRAWN BY:
TL
CHECKED BY:
BW
REVIEWED BY:
DBW
SCALE:
1"=50'

BAR IS ONE INCH ON ORIGINAL DRAWING
0" 1"
IF NOT ONE INCH ON THIS SHEET, ADJUST SCALES ACCORDINGLY

SHEET
34

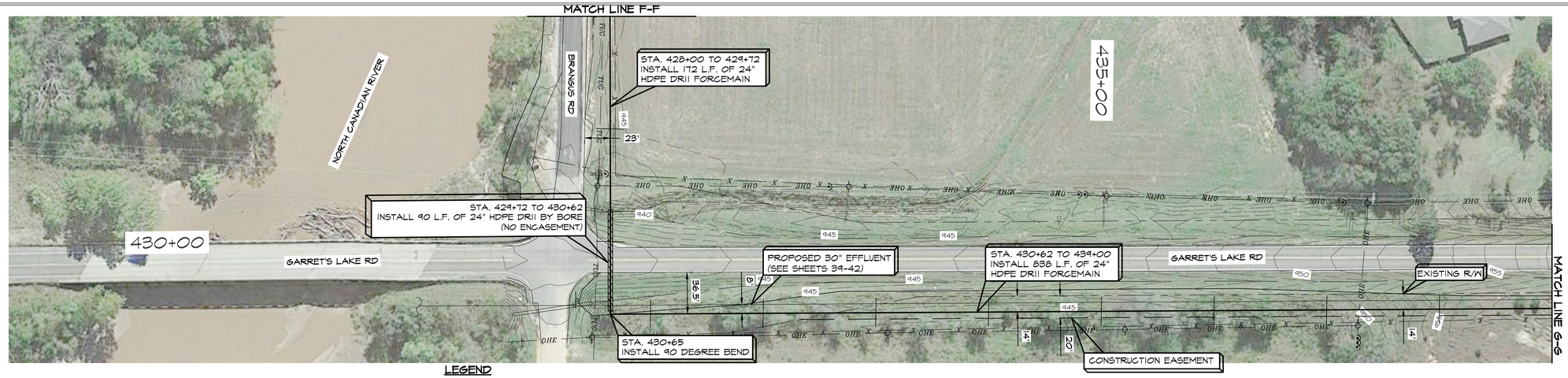

LEGEND

- PROPOSED 24" FORCEMAIN
- PROPOSED BORE
- OPTIONAL BORE
- PROPOSED REMOVE/REPLACE (SEE QUANTITIES)
- XXX — EXISTING CONTOUR LINES
- W — EXISTING WATER LINE
- OHE — EXISTING ELECTRIC LINE
- SS — EXISTING SEWER LINE
- G — EXISTING GAS LINE
- TUG — EXISTING TELEPHONE LINE
- EXISTING RIGHT-OF-WAY
- SUE — SUBSURFACE UTILITY ENGINEERING (CRITICAL LOCATE AREA)
- PROPOSED COMBINATION ARV
- EXISTING SIGN
- MB — EXISTING MAILBOX
- WM — EXISTING WATER METER
- EXISTING FIRE HYDRANT
- EXISTING GATE VALVE
- EXISTING POWER POLE
- EXISTING LIGHT POLE
- EXISTING GUY
- S — EXISTING MANHOLE
- G — EXISTING GAS METER
- T — EXISTING TPED
- EXISTING TREE

PROFILE SCALE
1"=50' HOR
1"=10' VERT

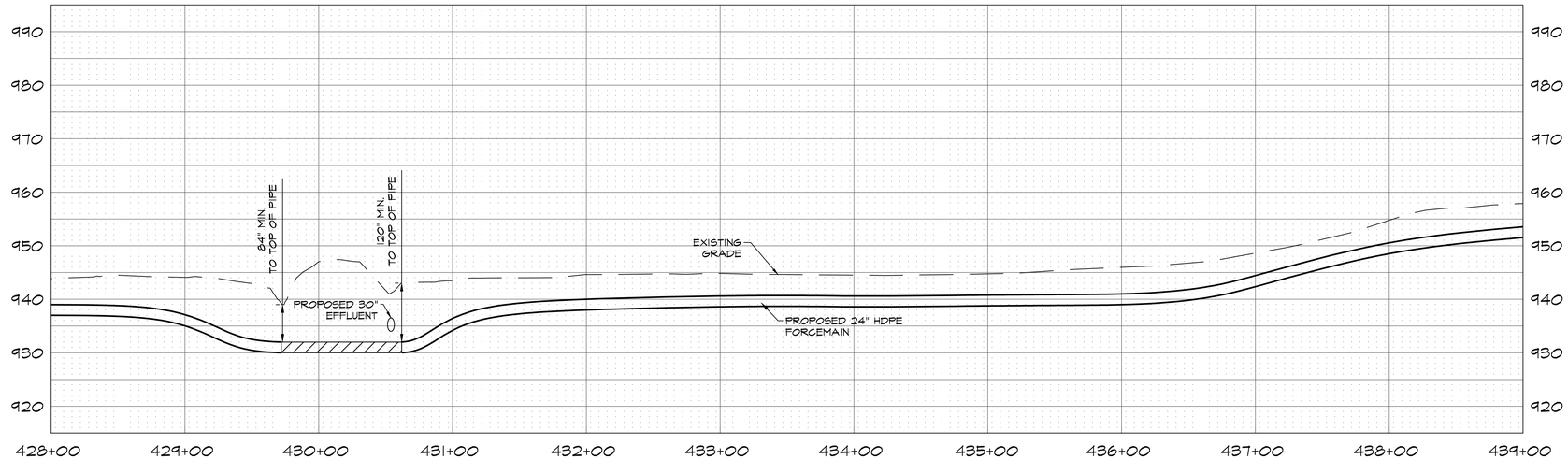

REGISTERED PROFESSIONAL ENGINEER
BRANDON WALL
21108
OKLAHOMA

WALL ENGINEERING
223 N. WASHINGTON, DURANT, OK 74701
OKLAHOMA CA #5413 EXP. JUNE 30, 2023

SUBMITTAL / REVISIONS:

DATE	BY	SUBMITTAL / REVISION
03/22	TL	ODEQ SUBMITTAL
06/22	TL	ISSUED FOR BIDDING

SHAWNEE MUNICIPAL AUTHORITY
CONVEYANCE - FORCEMAIN & DISCHARGE
SHAWNEE, OKLAHOMA

24" FORCEMAIN PLAN & PROFILE
STA. 428+00 TO 439+00

PROJECT NO. SHN-20-01
DATE 06/22
DRAWN BY: TL
CHECKED BY: BW
REVIEWED BY: DBW
SCALE: 1"=50'

BAR IS ONE INCH ON ORIGINAL DRAWING
0" 1"
IF NOT ONE INCH ON THIS SHEET, ADJUST SCALES ACCORDINGLY

SHEET
35

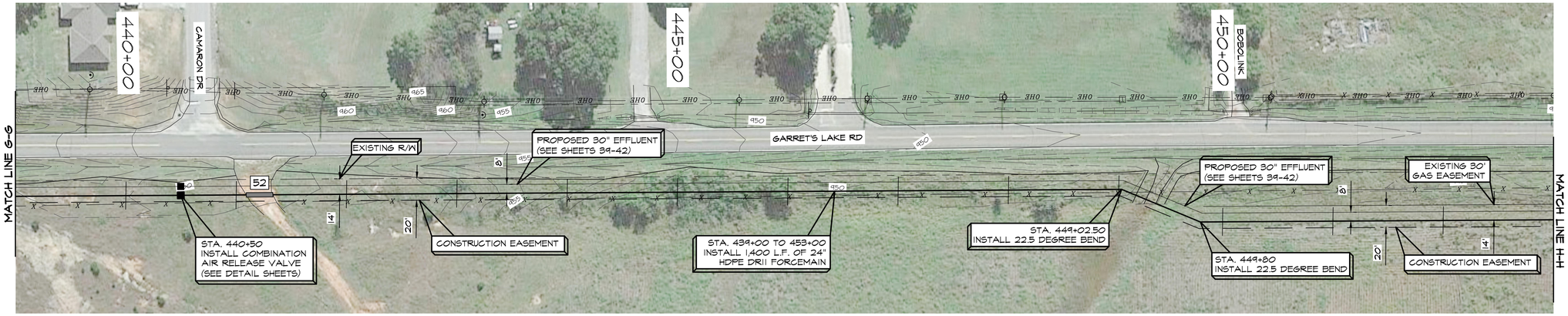

PROFILE SCALE
1"=50' HOR
1"=10' VERT

LEGEND

- PROPOSED 24" FORCEMAIN
- PROPOSED BORE
- OPTIONAL BORE
- PROPOSED REMOVE/REPLACE (SEE QUANTITIES)
- EXISTING CONTOUR LINES
- EXISTING WATER LINE
- EXISTING ELECTRIC LINE
- EXISTING SEWER LINE
- EXISTING GAS LINE
- EXISTING TELEPHONE LINE
- EXISTING RIGHT-OF-WAY
- SUBSURFACE UTILITY ENGINEERING (CRITICAL LOCATE AREA)
- PROPOSED COMBINATION ARV
- EXISTING SIGN
- EXISTING MAILBOX
- EXISTING WATER METER
- EXISTING FIRE HYDRANT
- EXISTING GATE VALVE
- EXISTING POWER POLE
- EXISTING LIGHT POLE
- EXISTING GUY
- EXISTING MANHOLE
- EXISTING GAS METER
- EXISTING TPED
- EXISTING TREE

REMOVE & REPLACE QUANTITIES	
SYM.	GRAVEL
52	24 L.F.

NOTES:
1. QUANTITIES LISTED REPRESENT AN APPROXIMATION OF THE LINEAR FEET OF REMOVE AND REPLACE REQUIRED. IT IS THE CONTRACTORS RESPONSIBILITY TO DETERMINE THE WIDTH AND CORRESPONDING ACTUAL QUANTITIES REQUIRED.
2. SEE DETAILS SHEETS FOR TYPICAL SECTIONS.
3. CULVERT REPLACEMENT INCLUDES LIKE-KIND END SECTIONS WHERE PRESENT. FIELD VERIFY PRIOR TO BID.
4. SIGN AND MAILBOX FINAL LOCATION TO BE FIELD DETERMINED.
5. ALL COSTS TO BE INCLUDED IN "SEWERMAIN RESTORATION" BID ITEM.

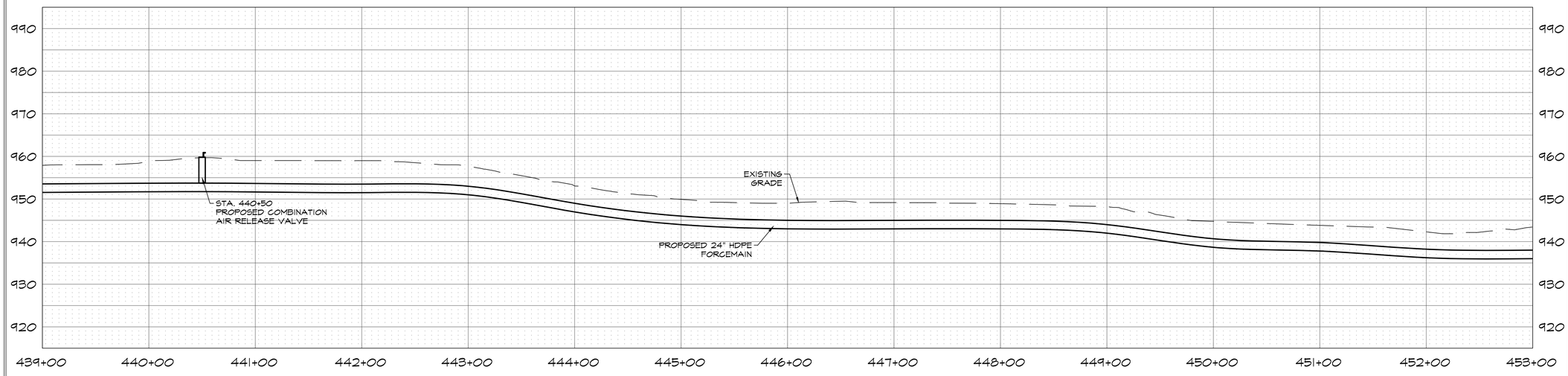

WALL ENGINEERING
223 N. WASHINGTON, DURANT, OK 74701
OKLAHOMA CA #5413 EXP. JUNE 30, 2023

SUBMITTAL / REVISIONS:

DATE	BY	SUBMITTAL / REVISION
03/22	TL	ODEQ SUBMITTAL
06/22	TL	ISSUED FOR BIDDING

SHAWNEE MUNICIPAL AUTHORITY
CONVEYANCE - FORCEMAIN & DISCHARGE
SHAWNEE, OKLAHOMA

24" FORCEMAIN PLAN & PROFILE
STA. 439+00 TO 453+00

PROJECT NO.
SHN-20-01
DATE
06/22
DRAWN BY:
TL
CHECKED BY:
BW
REVIEWED BY:
DBW
SCALE:
1"=50'

BAR IS ONE INCH ON ORIGINAL DRAWING
0" 1"
IF NOT ONE INCH ON THIS SHEET, ADJUST SCALES ACCORDINGLY

REGISTERED PROFESSIONAL ENGINEER
BRANDON WALL
21108
OKLAHOMA

SHEET
36

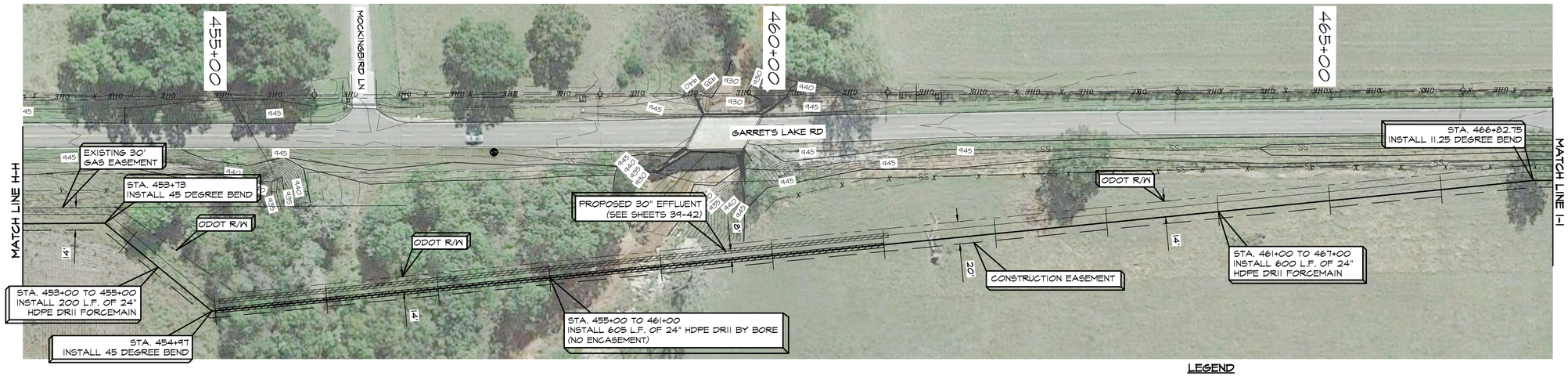

PROFILE SCALE
1"=50' HOR
1"=10' VERT

LEGEND

- PROPOSED 24" FORCEMAIN
- PROPOSED BORE
- OPTIONAL BORE
- PROPOSED REMOVE/REPLACE (SEE QUANTITIES)
- XXX — EXISTING CONTOUR LINES
- W — EXISTING WATER LINE
- OHE — EXISTING ELECTRIC LINE
- SS — EXISTING SEWER LINE
- G — EXISTING GAS LINE
- TUG — EXISTING TELEPHONE LINE
- EXISTING RIGHT-OF-WAY
- SUE — SUBSURFACE UTILITY ENGINEERING (CRITICAL LOCATE AREA)
- PROPOSED COMBINATION ARV
- EXISTING SIGN
- MB — EXISTING MAILBOX
- WM — EXISTING WATER METER
- EXISTING FIRE HYDRANT
- EXISTING GATE VALVE
- EXISTING POWER POLE
- EXISTING LIGHT POLE
- EXISTING GUY
- S — EXISTING MANHOLE
- G — EXISTING GAS METER
- T — EXISTING TPED
- EXISTING TREE

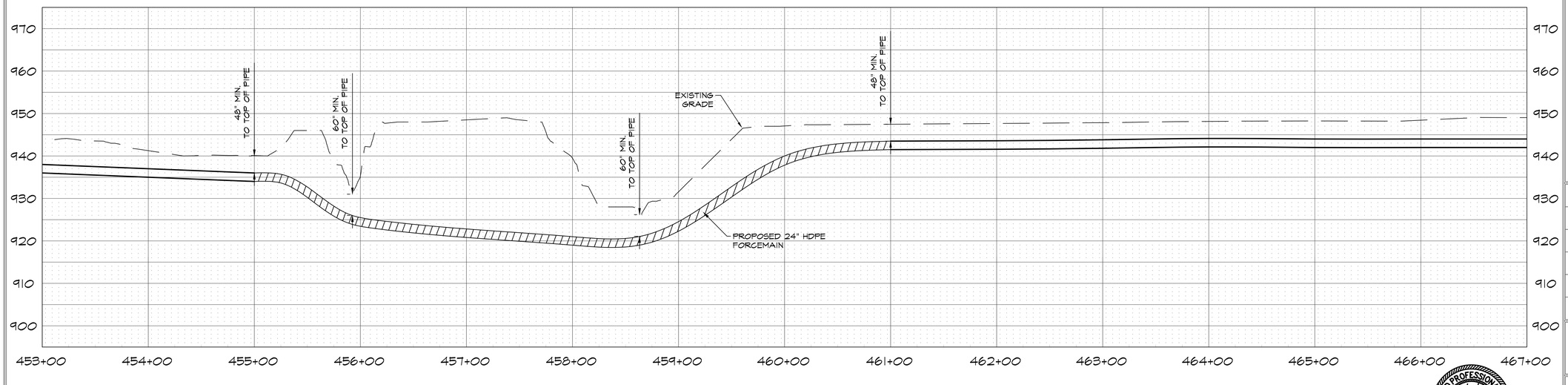

WALL ENGINEERING
223 N. WASHINGTON, DURANT, OK 74701
OKLAHOMA CA #5413 EXP. JUNE 30, 2023

SUBMITTAL / REVISIONS:

DATE	BY	SUBMITTAL / REVISION
03/22	TL	ODEQ SUBMITTAL
06/22	TL	ISSUED FOR BIDDING

SHAWNEE MUNICIPAL AUTHORITY
CONVEYANCE - FORCEMAIN & DISCHARGE
SHAWNEE, OKLAHOMA

24" FORCEMAIN PLAN & PROFILE
STA. 453+00 TO 467+00

PROJECT NO. SHN-20-01
DATE 06/22
DRAWN BY: TL
CHECKED BY: BW
REVIEWED BY: DBW
SCALE: 1"=50'

BAR IS ONE INCH ON ORIGINAL DRAWING
0" 1"
IF NOT ONE INCH ON THIS SHEET, ADJUST SCALES ACCORDINGLY

SHEET 37

REGISTERED PROFESSIONAL ENGINEER
6/24/22
BRANDON WALL
21108
OKLAHOMA

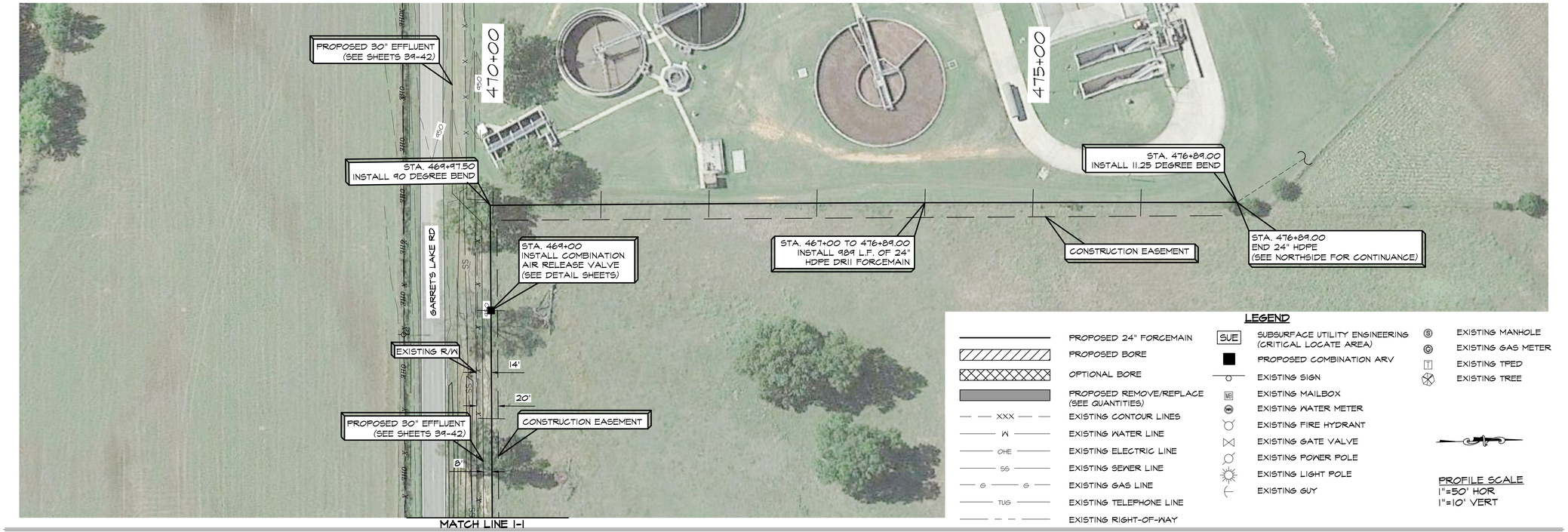

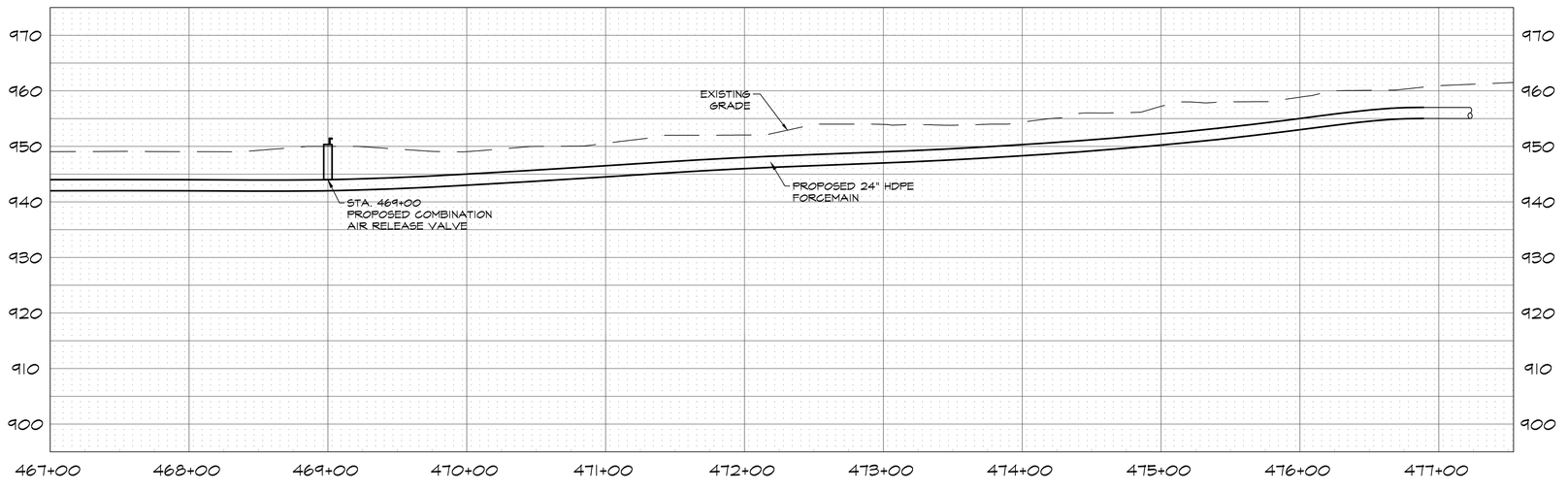

REGISTERED PROFESSIONAL ENGINEER
6/23/22
BRANDON WALL
21108
OKLAHOMA

WALL ENGINEERING
223 N. WASHINGTON, DURANT, OK 74701
OKLAHOMA CA #5413 EXP. JUNE 30, 2023

SUBMITTAL / REVISIONS:

DATE	BY	SUBMITTAL / REVISION
03/22	TL	ODEQ SUBMITTAL
06/22	TL	ISSUED FOR BIDDING

SHAWNEE MUNICIPAL AUTHORITY
CONVEYANCE - FORCEMAIN & DISCHARGE
SHAWNEE, OKLAHOMA

24" FORCEMAIN PLAN & PROFILE
STA. 467+00 TO 477+00

PROJECT NO.
SHN-20-01
DATE
06/22
DRAWN BY:
TL
CHECKED BY:
BW
REVIEWED BY:
DBW
SCALE:
1"=50'

BAR IS ONE INCH ON ORIGINAL DRAWING
0" 1"
IF NOT ONE INCH ON THIS SHEET, ADJUST SCALES ACCORDINGLY

SHEET
38



LEGEND

- PROPOSED 30" FORCEMAIN
- PROPOSED BORE
- OPTIONAL BORE
- PROPOSED REMOVE/REPLACE (SEE QUANTITIES)
- EXISTING CONTOUR LINES
- EXISTING WATER LINE
- EXISTING ELECTRIC LINE
- EXISTING SEWER LINE
- EXISTING GAS LINE
- EXISTING TELEPHONE LINE
- EXISTING RIGHT-OF-WAY
- SUBSURFACE UTILITY ENGINEERING (CRITICAL LOCATE AREA)
- PROPOSED COMBINATION ARV
- EXISTING SIGN
- EXISTING MAILBOX
- EXISTING WATER METER
- EXISTING FIRE HYDRANT
- EXISTING GATE VALVE
- EXISTING POWER POLE
- EXISTING LIGHT POLE
- EXISTING GUY
- EXISTING MANHOLE
- EXISTING GAS METER
- EXISTING TPED
- EXISTING TREE

PROFILE SCALE
1"=50' HOR
1"=10' VERT

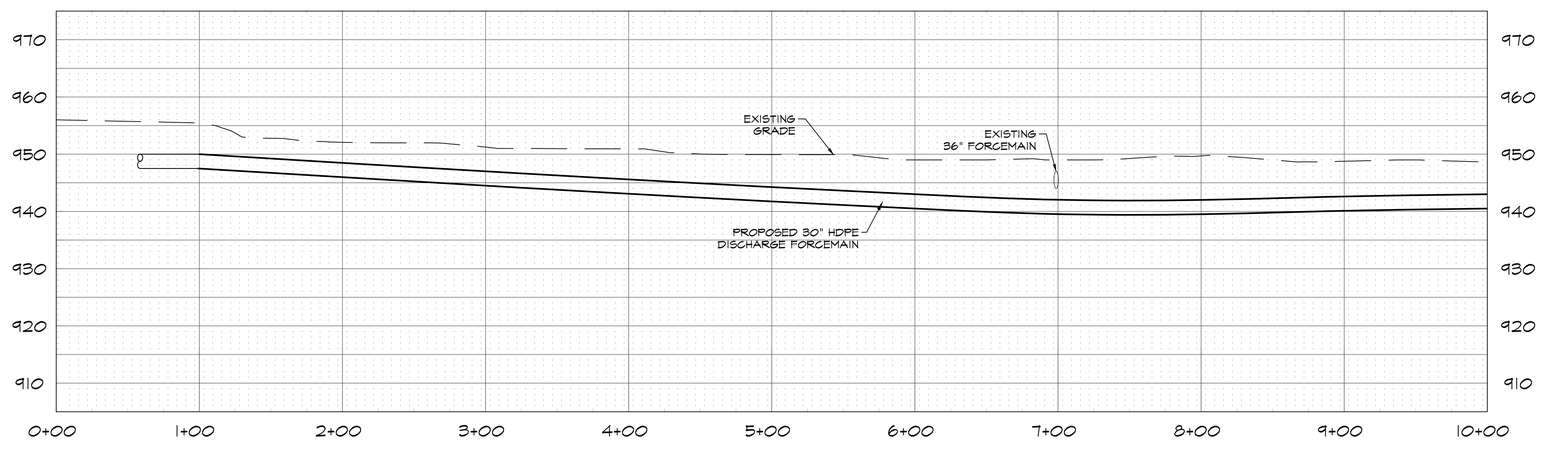

REGISTERED PROFESSIONAL ENGINEER
6/23/22
BRANDON WALL
21108
OKLAHOMA

WALL ENGINEERING
223 N. WASHINGTON, DURANT, OK 74701
OKLAHOMA CA #5413 EXP. JUNE 30, 2023

SUBMITTAL / REVISIONS:

DATE	BY	SUBMITTAL / REVISION
03/22	TL	ODEQ SUBMITTAL
06/22	TL	ISSUED FOR BIDDING

SHAWNEE MUNICIPAL AUTHORITY
CONVEYANCE - FORCEMAIN & DISCHARGE
SHAWNEE, OKLAHOMA

30" DISCHARGE PLAN & PROFILE
STA. 1+00 TO 10+00

PROJECT NO.
SHN-20-01
DATE
06/22
DRAWN BY:
TL
CHECKED BY:
BW
REVIEWED BY:
DBW
SCALE:
1"=50'

BAR IS ONE INCH ON ORIGINAL DRAWING
0" 1"
IF NOT ONE INCH ON THIS SHEET, ADJUST SCALES ACCORDINGLY

SHEET
39



LEGEND

- PROPOSED 30" FORCEMAIN
- PROPOSED BORE
- OPTIONAL BORE
- PROPOSED REMOVE/REPLACE (SEE QUANTITIES)
- EXISTING CONTOUR LINES
- EXISTING WATER LINE
- EXISTING ELECTRIC LINE
- EXISTING SEWER LINE
- EXISTING GAS LINE
- EXISTING TELEPHONE LINE
- EXISTING RIGHT-OF-WAY
- SUBSURFACE UTILITY ENGINEERING (CRITICAL LOCATE AREA)
- PROPOSED COMBINATION ARV
- EXISTING SIGN
- EXISTING MAILBOX
- EXISTING WATER METER
- EXISTING FIRE HYDRANT
- EXISTING GATE VALVE
- EXISTING POWER POLE
- EXISTING LIGHT POLE
- EXISTING GUY
- EXISTING MANHOLE
- EXISTING GAS METER
- EXISTING TPED
- EXISTING TREE

PROFILE SCALE
1"=50' HOR
1"=10' VERT

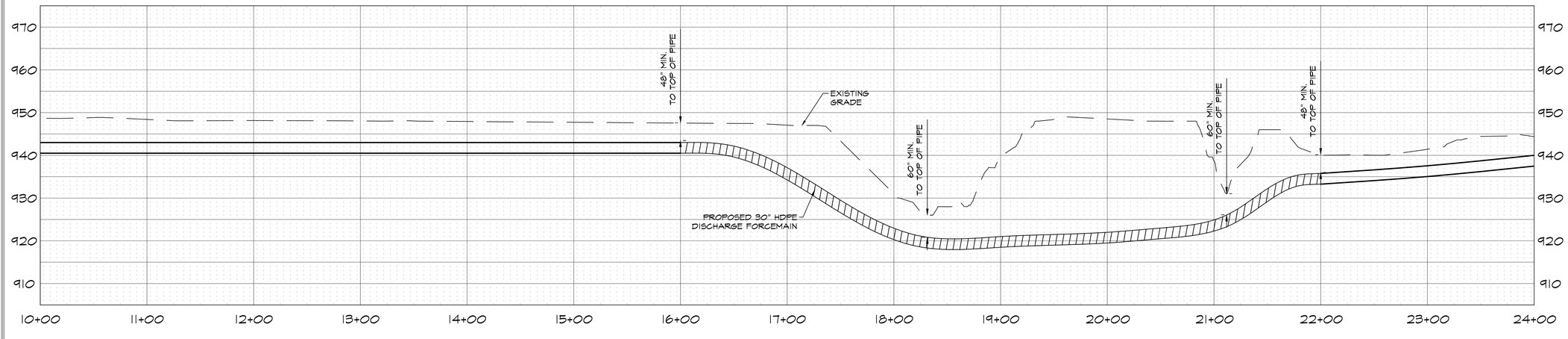

WALL ENGINEERING
223 N. WASHINGTON, DURANT, OK 74701
OKLAHOMA CA #5413 EXP. JUNE 30, 2023

SUBMITTAL / REVISIONS:

DATE	BY	SUBMITTAL / REVISION
03/22	TL	ODEQ SUBMITTAL
06/22	TL	ISSUED FOR BIDDING

SHAWNEE MUNICIPAL AUTHORITY
CONVEYANCE - FORCEMAIN & DISCHARGE
SHAWNEE, OKLAHOMA

30" DISCHARGE PLAN & PROFILE
STA. 10+00 TO 24+00

PROJECT NO.
SHN-20-01
DATE
06/22
DRAWN BY:
TL
CHECKED BY:
BW
REVIEWED BY:
DBW
SCALE:
1"=50'

BAR IS ONE INCH ON ORIGINAL DRAWING
0" 1"
IF NOT ONE INCH ON THIS SHEET, ADJUST SCALES ACCORDINGLY

REGISTERED PROFESSIONAL ENGINEER
06/24/22
BRANDON WALL
21108
OKLAHOMA

SHEET
40

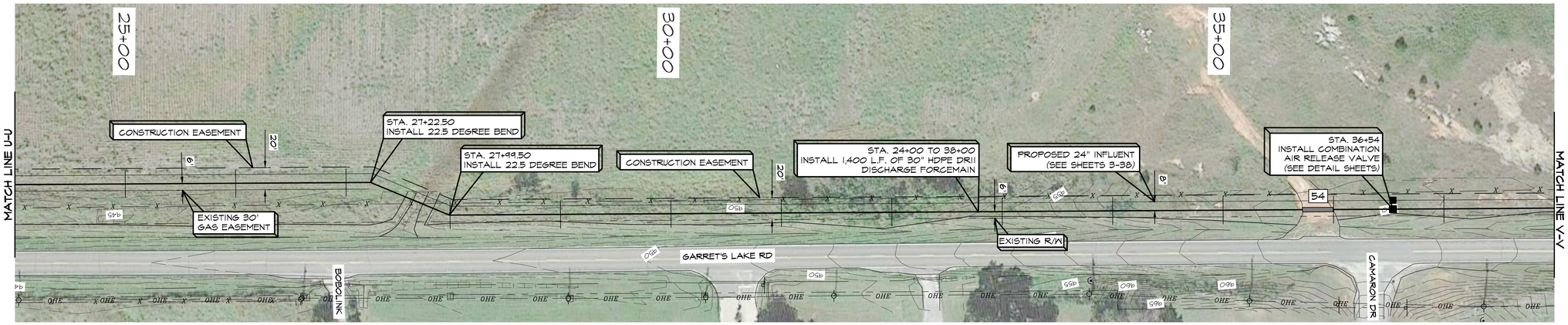

LEGEND

- PROPOSED 30" FORCEMAIN
- PROPOSED BORE
- OPTIONAL BORE
- PROPOSED REMOVE/REPLACE (SEE QUANTITIES)
- XXX — EXISTING CONTOUR LINES
- W — EXISTING WATER LINE
- OHE — EXISTING ELECTRIC LINE
- SS — EXISTING SEWER LINE
- G — EXISTING GAS LINE
- TUG — EXISTING TELEPHONE LINE
- EXISTING RIGHT-OF-WAY

- SUE — SUBSURFACE UTILITY ENGINEERING (CRITICAL LOCATE AREA)
- PROPOSED COMBINATION ARV
- EXISTING SIGN
- EXISTING MAILBOX
- EXISTING WATER METER
- EXISTING FIRE HYDRANT
- EXISTING GATE VALVE
- EXISTING POWER POLE
- EXISTING LIGHT POLE
- EXISTING GUY
- EXISTING MANHOLE
- EXISTING GAS METER
- EXISTING TPED
- EXISTING TREE

PROFILE SCALE
1"=50' HOR
1"=10' VERT

REMOVE & REPLACE QUANTITIES	
SYM.	GRAVEL
59	28 L.F.

NOTES:
1. QUANTITIES LISTED REPRESENT AN APPROXIMATION OF THE LINEAR FEET OF REMOVE AND REPLACE REQUIRED. IT IS THE CONTRACTORS RESPONSIBILITY TO DETERMINE THE WIDTH AND CORRESPONDING ACTUAL QUANTITIES REQUIRED.
2. SEE DETAILS SHEETS FOR TYPICAL SECTIONS.
3. CULVERT REPLACEMENT INCLUDES LIKE-KIND END SECTIONS WHERE PRESENT. FIELD VERIFY PRIOR TO BID.
4. SIGN AND MAILBOX FINAL LOCATION TO BE FIELD DETERMINED.
5. ALL COSTS TO BE INCLUDED IN "SEWERMAIN RESTORATION" BID ITEM.

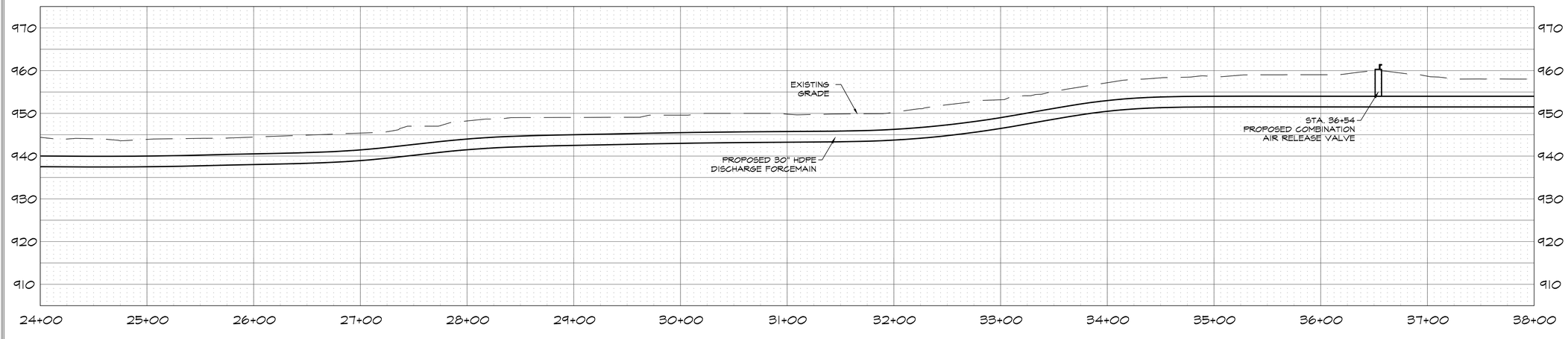

REGISTERED PROFESSIONAL ENGINEER
6/23/22
BRANDON WALL
21108
OKLAHOMA

WALL ENGINEERING
223 N. WASHINGTON, DURANT, OK 74701
OKLAHOMA CA #5413 EXP. JUNE 30, 2023

SUBMITTAL / REVISIONS:

DATE	BY	SUBMITTAL / REVISION
03/22	TL	ODEQ SUBMITTAL
06/22	TL	ISSUED FOR BIDDING

SHAWNEE MUNICIPAL AUTHORITY
CONVEYANCE - FORCEMAIN & DISCHARGE
SHAWNEE, OKLAHOMA

30" DISCHARGE PLAN & PROFILE
STA. 24+00 TO 38+00

PROJECT NO.
SHN-20-01
DATE
06/22
DRAWN BY:
TL
CHECKED BY:
BW
REVIEWED BY:
DBW
SCALE:
1"=50'

BAR IS ONE INCH ON ORIGINAL DRAWING
0" 1"
IF NOT ONE INCH ON THIS SHEET, ADJUST SCALES ACCORDINGLY

SHEET
41

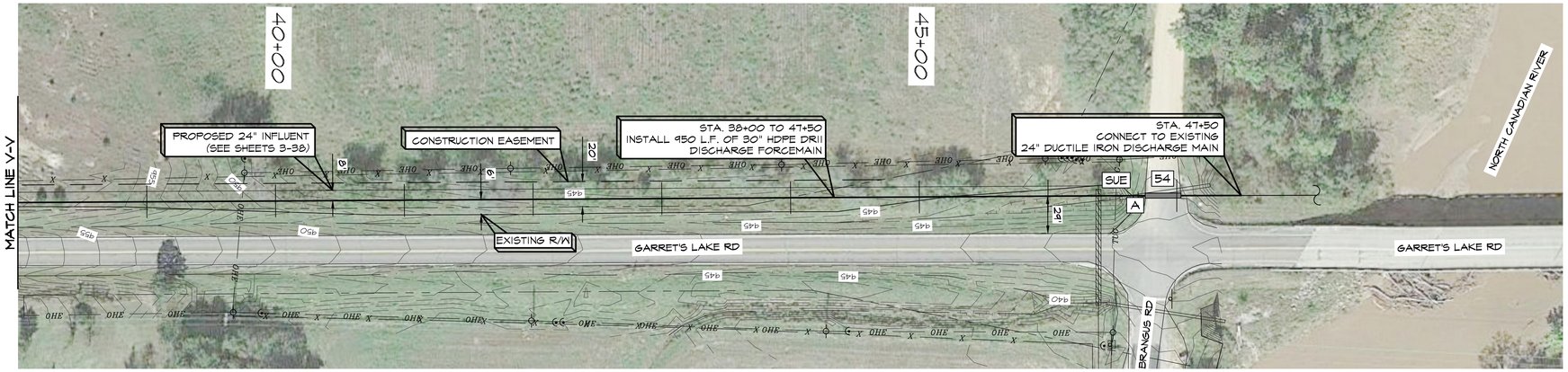

LEGEND

- PROPOSED 30" FORCEMAIN
- PROPOSED BORE
- OPTIONAL BORE
- PROPOSED REMOVE/REPLACE (SEE QUANTITIES)
- XXX — EXISTING CONTOUR LINES
- W — EXISTING WATER LINE
- OHE — EXISTING ELECTRIC LINE
- SS — EXISTING SEWER LINE
- G — EXISTING GAS LINE
- TUG — EXISTING TELEPHONE LINE
- EXISTING RIGHT-OF-WAY
- SUE — SUBSURFACE UTILITY ENGINEERING (CRITICAL LOCATE AREA)
- PROPOSED COMBINATION ARV
- EXISTING SIGN
- EXISTING MAILBOX
- EXISTING WATER METER
- EXISTING FIRE HYDRANT
- EXISTING GATE VALVE
- EXISTING POWER POLE
- EXISTING LIGHT POLE
- EXISTING GUY
- EXISTING MANHOLE
- EXISTING GAS METER
- EXISTING TPED
- EXISTING TREE

PROFILE SCALE
1"=50' HOR
1"=10' VERT

REMOVE & REPLACE QUANTITIES				
SYM.	ASPHAULT	CULVERT	CULVERT LENGTH	SIGNS
54	28 L.F.	30" CMP	71 L.F.	
A				1

NOTES:
1. QUANTITIES LISTED REPRESENT AN APPROXIMATION OF THE LINEAR FEET OF REMOVE AND REPLACE REQUIRED. IT IS THE CONTRACTORS RESPONSIBILITY TO DETERMINE THE WIDTH AND CORRESPONDING ACTUAL QUANTITIES REQUIRED.
2. SEE DETAILS SHEETS FOR TYPICAL SECTIONS.
3. CULVERT REPLACEMENT INCLUDES LIKE-KIND END SECTIONS WHERE PRESENT. FIELD VERIFY PRIOR TO BID.
4. SIGN AND MAILBOX FINAL LOCATION TO BE FIELD DETERMINED.
5. ALL COSTS TO BE INCLUDED IN "SEWERMAIN RESTORATION" BID ITEM.

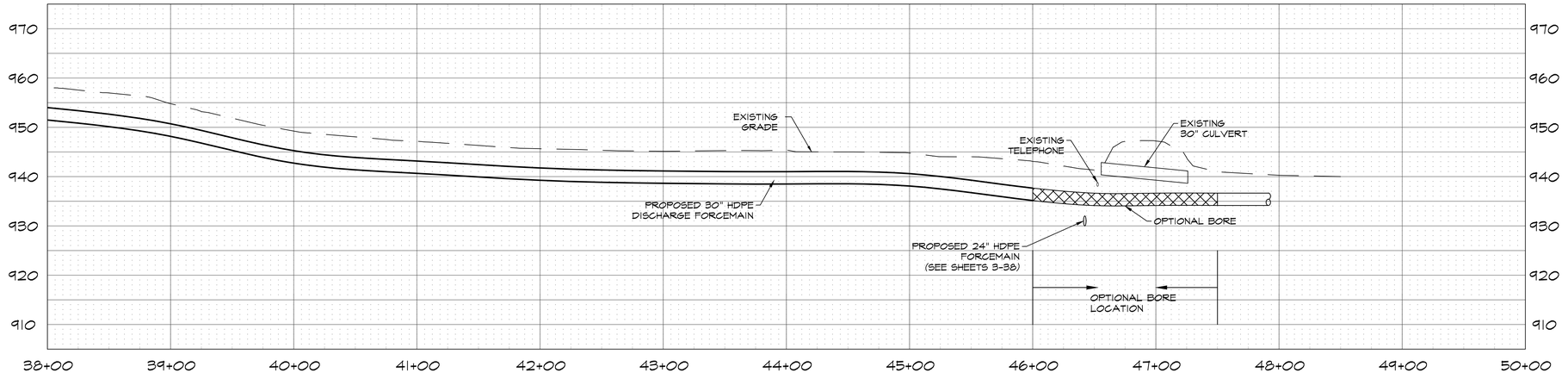

REGISTERED PROFESSIONAL ENGINEER
6/23/22
BRANDON WALL
21108
OKLAHOMA

WALL ENGINEERING
223 N. WASHINGTON, DURANT, OK 74701
OKLAHOMA CA #5413 EXP. JUNE 30, 2023

SUBMITTAL / REVISIONS:

DATE	BY	SUBMITTAL / REVISION
03/22	TL	ODEQ SUBMITTAL
06/22	TL	ISSUED FOR BIDDING

SHAWNEE MUNICIPAL AUTHORITY
CONVEYANCE - FORCEMAIN & DISCHARGE
SHAWNEE, OKLAHOMA

30" DISCHARGE PLAN & PROFILE
STA. 38+00 TO 47+50

PROJECT NO.
SHN-20-01
DATE
06/22
DRAWN BY:
TL
CHECKED BY:
BW
REVIEWED BY:
DBW
SCALE:
1"=50'

BAR IS ONE INCH ON ORIGINAL DRAWING
0" 1"
IF NOT ONE INCH ON THIS SHEET, ADJUST SCALES ACCORDINGLY

SHEET
42

NOTE:

1. FLOWABLE FILL SHALL BE PROTECTED WITH BRIDGE PLATES OR A TEMPORARY SURFACE SEAL OF COLD MIX ASPHALT CONCRETE UNTIL FINAL SURFACE IS INSTALLED. COLD MIX ASPHALT IS NOT ACCEPTABLE FOR FINAL REPAIR.
2. FLOWABLE FILL SHALL BE ALLOWED TO CURE FOR A PERIOD OF NOT LESS THAN 24 HOURS PRIOR TO PLACEMENT OF SURFACE.
3. FLOWABLE FILL SHALL BE PROTECTED FROM FREEZING OR TOO RAPID CURING.
4. CONCRETE REPAIR SURFACE SHALL BE FINISHED WITH A ROUGH BROOM TEXTURE, OR MATCHING EXISTING ADJACENT SURFACES.
5. CONCRETE REPAIRS SHALL NOT BE OPENED FOR TRAFFIC FOR A PERIOD OF NOT LESS THAN 72 HOURS FOLLOWING PLACEMENT. BRIDGE PLATES SHALL BE USED TO PROTECT CONCRETE ON ANY LANES REQUIRED TO BE OPENED.
6. BEDDING, BACKFILL INCLUDING SELECT/FLOWABLE FILL IS CONSIDERED INCIDENTAL TO THE PIPE INSTALLATION AND/OR INCLUDED IN PIPE RESTORATION ITEM.
7. FOR DEEP TRENCHES, DEPTH OF FLOWABLE FILL SHALL BE A MAXIMUM OF 4' DEEP, AS MEASURED DOWN FROM THE SUBGRADE. GRANULAR BACKFILL MATERIAL SHALL BE USED FROM BOTTOM OF FLOWABLE FILL TO THE TOP OF PIPE ZONE.
8. PATCH SHALL EXTEND A MINIMUM OF 18" OUTSIDE EDGE OF EXCAVATION. FOR CONCRETE PAVEMENT AND APRONS, SAWCUTS WITHIN 5 FEET OF AN EXISTING JOINT SHALL BE REMOVED AND REPLACED TO THE EXISTING JOINT. FOR ALL ASPHALT STREETS, SAWCUTS WITH 3 FEET OF THE EXISTING ASPAHLT EDGE, ASPHALT SHALL BE REMOVED TO THAT EDGE AND THE ENTIRE SECTION REPLACED. LONGITUDINAL SAWCUTS SHALL NOT FALL WITHIN 36 INCHES OF THE TIRE PATH. EXACT QUANTITY/COST OF EXTENDED PAVING TO BE VERIFIED BY CONTRACTOR PRIOR TO BID.
9. FOR DRIVEWAY CROSSINGS, SELECT FILL OR AGGREGATE BASE MAY BE SUBSTITUTED FOR FLOWABLE FILL. FLOWABLE FILL WILL ONLY BE REQUIRED FOR STREET CROSSINGS.
10. ALL AGGREGATE BASE MATERIAL SHALL BE COMPACTED TO THE SPECIFIED DENSITY IN 6" LAYERS MAXIMUM.
11. FOR ASPHALT PAVEMENT REPAIRS THE TOP 3" OF CONCRETE SURFACE SHALL BE SUBSTITUTED WITH 3" OF HMAC ODOT TYPE "A" MEETING THE REQUIREMENTS OF ODOT STANDARD SPECIFICATIONS FOR HIGHWAY CONSTRUCTION, LATEST EDITION.
12. SURFACE REPAIR SHALL MATCH SLOPE & CURB TYPE OF ADJOINING PAVEMENT.
13. CONSTRUCT CONCRETE JOINT TO MATCH EXISTING.

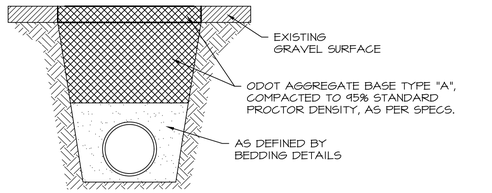

GRAVEL SURFACE

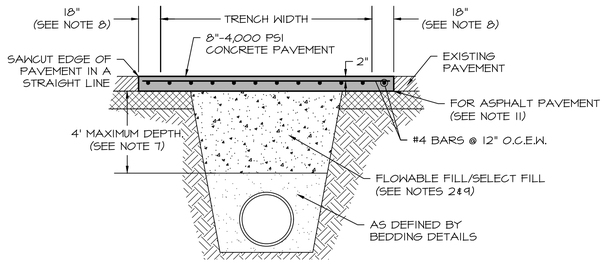

ASPHALT/CONCRETE PAVEMENT

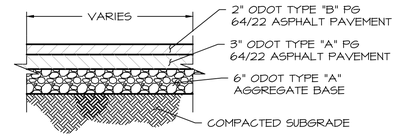

BRANGUS ROAD ASPHALT REPAIR/REPLACEMENT
N.T.S.

NOTES
1. WHEN OPTIONAL BORE IS ELECTED TO BE USED ASPHALT REPAIR NET REQUIRED.

SEQUENCE OF CONSTRUCTION
1. PERFORM EXISTING ROADWAY SURVEY TO ESTABLISH GRADE.
2. REMOVE PAVEMENT & BASE 11" BELOW EXISTING SURFACE.
3. SCARIFY, COMPACT & PROOF ROLL.
4. REMOVE/REPLACE SOFT/FAILING AREAS.
5. GRADE TO DRAIN.
6. INSTALL ASPHALT SECTION AND GRADE TO MATCH EXISTING GRADE PRIOR TO REMOVAL.



WALL ENGINEERING
223 N. WASHINGTON, DURANT, OK 74701
OKLAHOMA CA #5413 EXP. JUNE 30, 2023

SUBMITTAL / REVISIONS:

DATE	BY	SUBMITTAL / REVISION
03/22	TL	ODEQ SUBMITTAL
06/22	TL	ISSUED FOR BIDDING

OPEN CUT SURFACE REPAIR DETAILS
N.T.S.

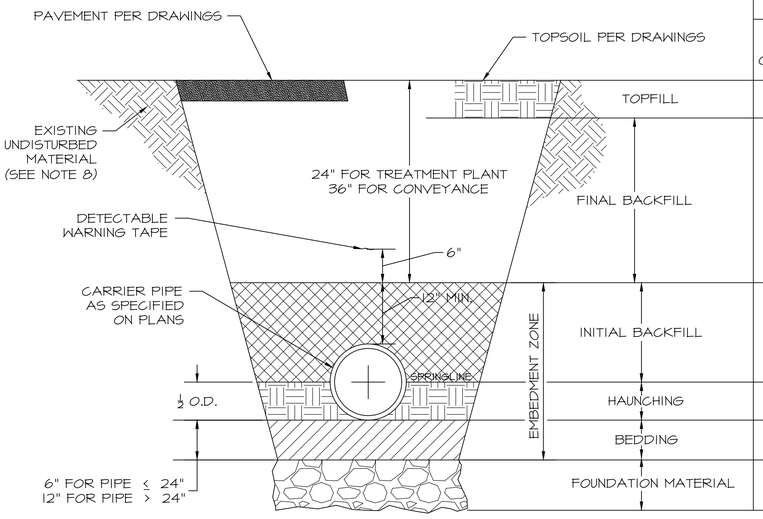

BEDDING / BACKFILL REQUIREMENTS AND MATERIAL DESIGNATIONS (SEE MATERIAL DESCRIPTIONS)	GRAVITY MAINS		PRESSURE MAINS		UNDER PAVED AREAS		STREET CROSSINGS	
	DI / CONC.	HDPE / PVC	DI / CONC.	HDPE / PVC	DI / CONC.	HDPE / PVC	DI / CONC.	HDPE / PVC
TOPFILL	8	8	8	8	11	11	11	11
FINAL BACKFILL	13	13	13	13	10	10	10	10
INITIAL BACKFILL	12	1/2/1 *	12	12	1/2	1/2/1 *	1/2	1/2/1 *
HAUNCHING	2	1/2/1 *	2	1/2/1 *	2	1/2/1 *	2	1/2/1 *
BEDDING	2	2	2	2	2	2	2	2
FOUNDATION MATERIAL	CRUSHED ROCK OR RIP RAP (WHEN REQ'D)							

MATERIAL DESCRIPTIONS (SEE SPECIFICATION SECTION 31_23_24)

1. #57 CRUSHED ROCK
2. #67 CRUSHED ROCK
3. FINE CRUSHED ROCK
4. FLOWABLE FILL
5. SELECT BACKFILL MATERIAL
6. PEA GRAVEL
7. SAND
8. TOPSOIL (NO STONES OR ROCKS)
9. SELECT FILL
10. AGGREGATE BASE OR CONTROLLED LOW STRENGTH MATERIAL
11. PAVEMENT MATCHING OR AS SPECIFIED IN DRAWINGS
12. SELECT EXCAVATED MATERIAL (NO STONES LARGER THAN 1")
13. SELECT EXCAVATION MATERIAL (NO STONES LARGER THAN 4")

* LINES SMALLER THAN 18" SHALL BE #67 BEDDING.
LINES 18" AND LARGER SHALL BE #57 BEDDING.
SAND MAY BE SUBSTITUTED FOR PVC/HDPE LINES 8" & SMALLER.

UTILITY BEDDING DETAIL
N.T.S.

EMBEDDMENT DETAIL NOTES

1. MINIMUM TRENCH WIDTH AT SPRINGLINE OF PIPE
   a. PIPES < 4" — 18"
   b. PIPES 6" - 18" — 12" + O.D.
   c. PIPES > 20" — 24" + O.D.
2. EXCAVATION MAY BE WIDENED ABOVE THE EMBEDMENT ZONE AT THE CONTRACTOR'S OPTION AND EXPENSE.
3. EMBEDMENT / BACKFILL LIFT THICKNESS (MAXIMUM)
   a. FINAL BACKFILL — 12" LIFTS TYPICAL; 6" LIFTS UNDER PAVING / STRUCTURES
   b. INITIAL BACKFILL — 6" LIFTS
   c. HAUNCHING — 4" LIFTS
   d. BEDDING — 4" LIFTS
4. TRENCH SLOPE, SHORING, BENCHING, ETC TO BE DETERMINED BY THE CONTRACTOR. CONTRACTOR IS SOLELY RESPONSIBLE FOR TRENCH SAFETY AND OSHA COMPLIANCE.
5. EXCAVATION FOR BELL HOLE REQUIRED FOR ALL PIPING <4". CONTRACTOR SHALL SELECT AND UTILIZE CONSTRUCTION METHODS SUCH THAT ALL AREAS UNDER THE PIPE HAUNCHES ARE FILLED WITH THE APPROPRIATE MATERIAL AND COMPACTED.
6. ALL MATERIALS UNDER PAVING / STRUCTURES SHALL BE COMPACTED TO 95% MODIFIED PROCTOR DENSITY AT 4% OPTIMUM MOISTURE CONTENT BY SHEEPSFOOT OR OTHER SUTIABLE MECHANICAL COMPACTION METHODS AT SPECIFIED LIFT THICKNESSES. COMPACTION EQUIPMENT MUST NOT COME IN CONTACT WITH CARRIER PIPE NOR CASING PIPE.
7. IF TRENCH BOTTOM IS OVER-EXCAVATED BELOW INTENDED GRADE, FILL THE OVER-EXCAVATION WITH EMBEDMENT MATERIAL AND COMPACT AT THE DENSITY SPECIFIED FOR THE EMBEDMENT MATERIAL.
8. THE EXISTING NATIVE MATERIAL WITHIN THE LIMITS OF THE EMBEDMENT ZONE IS TO REMAIN UNDISTURBED OR REPLACED WITH SPECIFIED PIPE EMBEDMENT MATERIAL IF OVER-EXCAVATION TAKES PLACE. REPLACEMENT WITH ONSITE MATERIAL WILL NOT BE ACCEPTABLE.
9. IF BEDDING DETAIL CONFLICTS WITH ANY OTHER DETAIL THE MORE STRINGENT SHALL APPLY.

SHAWNEE MUNICIPAL AUTHORITY
CONVEYANCE - FORCEMAIN & DISCHARGE
SHAWNEE, OKLAHOMA

STANDARD FORCE MAIN DETAILS

PROJECT NO.
SHN-20-01
DATE
06/22
DRAWN BY:
TL
CHECKED BY:
BW
REVIEWED BY:
DBW
SCALE:
NOT TO SCALE

BAR IS ONE INCH ON ORIGINAL DRAWING
0" 1"
IF NOT ONE INCH ON THIS SHEET, ADJUST SCALES ACCORDINGLY

SHEET
43

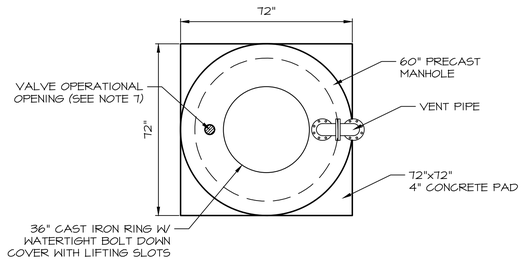

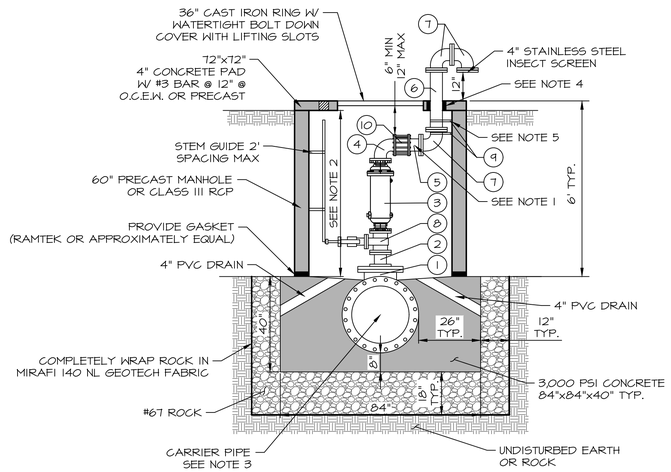

NOTES:

1. SPOOL LENGTH TO BE ADJUSTED SUCH THAT RISER PIPE IS IMMEDIATELY ADJACENT TO MANHOLE WALL.
2. MANHOLE HEIGHT TO BE ADJUSTED BASED ON BURY DEPTH & EXACT EQUIPMENT DIMENSIONS TO MAINTAIN 6" TO 12" CLEARANCE ABOVE 90 DEGREE BEND AS SHOWN.
3. DEPTH OF CARRIER PIPE TO BE FIELD MODIFIED FOR EXACT APPURTENANCE HEIGHT.
4. PROVIDE CORE HOLE FOR VENT PIPE. SEAL PENETRATION WITH RAM NECK, SYNCHOFLEX OR EQUAL.
5. SECURE PIPE STRAPS TO WALL USING STAINLESS ANCHOR BOLTS & HILTI ANCHORING SYSTEM SUBMITTAL REQUIRED.
6. AIR VAC SHALL BE CONNECTED TO GATE VALVE AND VENT PIPING BY FLANGE CONNECTION.
7. VALVE EXTENSION SHALL BE POSITIONED WHERE IT CAN BE OPERATED ABOVE GROUND WITHIN 4" OF MANHOLE TOP. PROVIDE CORE HOLE & SEAL WITH RAM NECK, SYNCHOFLEX OR EQUAL.
8. VENT PIPE TO BE PAINTED SILVER IN COLOR.
9. MANHOLE LIDS SHALL BE MANUFACTURED WITH THE WORDS "CITY OF SHAWNEE" & "WASTEWATER" INCLUDED.

SCHEDULE

NO.	DESCRIPTION
1	24"x12" HDPE FLG TEE
2	HDPE FLG OUTLET (12"x4")
3	4" DEZURIK APCO SERIES 401 SEWER AIR VAC VALVE (FLG x FLG)
4	4" D.I. 90 DEGREE (FLG x PE)
5	4" D.I. SPOOL (PE x FL)
6	4" D.I. SPOOL (FL x FL)
7	4" D.I. 90 DEGREE (FL x FL)
8	4" GATE VALVE W/OPERATOR (BEVEL GEARING)
9	¼" x ¾" GALVANIZED STRAPS DRILLED TO D.I. PIPE
10	SMITH BLAIR CAST COUPLING OR EQUAL

AIR RELEASE VALVE & VAULT DETAILS

N.T.S.



WALL ENGINEERING
223 N. WASHINGTON, DURANT, OK 74701
OKLAHOMA CA #5413 EXP. JUNE 30, 2023

SUBMITTAL / REVISIONS:

DATE	BY	SUBMITTAL / REVISION
03/22	TL	ODEQ SUBMITTAL
06/22	TL	ISSUED FOR BIDDING

SHAWNEE MUNICIPAL AUTHORITY
CONVEYANCE - FORCEMAIN & DISCHARGE
SHAWNEE, OKLAHOMA

STANDARD FORCE MAIN DETAILS

PROJECT NO.
SHN-20-01
DATE
06/22
DRAWN BY:
TL
CHECKED BY:
BW
REVIEWED BY:
DBW
SCALE:
NOT TO SCALE

BAR IS ONE INCH ON ORIGINAL DRAWING
0" 1"
IF NOT ONE INCH ON THIS SHEET, ADJUST SCALES ACCORDINGLY

SHEET
44

WALL ENGINEERING, LLC
223 N Washington Ave
Durant, OK 74702
Ph: 580-924-1800

ADDENDUM NO. 1

TO: ALL PLAN HOLDERS

RE: Shawnee Wastewater System Improvements

DATE: 07/08/22

The Plans, Specifications and Contract Documents for the above referenced project are hereby modified / clarified as follows.

Please note that changes made to the plans/specs added by addendum will only contain a summary of changes in the addendum verbiage and may not contain all modifications. It is the Contractor's responsibility to thoroughly review the revised sheets/specs.

General (applying to all project sections)

A1 – 1 **Information:** Q&A provided in CivCast are made a part of this addendum by reference.

A1 – 2 **Information:** There are numerous locations where a structural engineer is required to verify/certify miscellaneous items during construction. The selection of the structural engineer is by the Contractor, but it would be our preference that the project Structural Engineer be utilized for this purpose (BKL, Inc, Tulsa, OK (918) 835-9588.)

A1 – 3 **Clarification:** There are areas withing the drawings where underground fittings are drawn as what could be interpreted as flanged. It is the intent the ALL underground fittings be mechanical joint unless specifically detailed otherwise (regardless of how they are drawn.)

A1 – 4 **Clarification:** Refer to Civil Drawings for correct location and number of electrically actuated gates, electronically actuated valves, hoists & cranes. Provide power and controls to all and coordinate with Electrical Drawings.

A1 – 5 **Clarification:** Provide power to all cranes and hoists called out on Civil Drawings. Furnish per like kind on Electrical Drawings if not detailed.

A1 – 6 **Clarification:** All hydrants shown on drawings will include a hose mount. It will be wall mounted if adjacent to a structure and free standing if not. See detail sheets.

A1 – 7 **Clarification:** Concrete joints in roadway/paving shall have a maximum spacing of 10' for sawed joints and 30' for expansion joints.

A1 – 8 Clarification: Foundation prep under ALL structures (even minor structures) shall be per C-2 Earthwork Note 2. No exceptions.

A1 – 9 Specification: All hoses for hydrants to be reinforced rubber commercial hose with a 300psi working pressure rating and a minimum burst pressure of 1200psi. Underhill UltraMax Blue or equal. Underhill PowerBlast Nozzle or equal.

A1 – 10 Addition: All internal hose mounts to be supplied with 1" x 25' hose.

A1 – 11 Addition: Supply the following hoses w/ spray nozzles to be field located:
1. 6ea – 50'
2. 4ea – 100'
3. 4ea – 200'

A1 – 12 Addition: Provide auto-openers and manual chain wheel operators for all overhead doors. Field locate auto-opener adjacent to door.

A1 – 13 Addition: Trolley hoists to be inspected by the supplier to certify installation meets minimum standards and is appropriate for application.

A1 – 14 Addition: All pipe supports to be anchored to slabs per manufacturer's recommendations.

A1 – 15 Modification: 00_41_16 List of Manufacturers – Revised

A1 – 16 Modification: 03_30_00 Cast in Place Concrete – Revised

A1 – 17 Modification: 33_01_33 Wastewater Liquid & Solids Removal – Revised

Northside WWTP

A1 – 18 Clarification: Floor drains to be Neenah 4937-A unless otherwise noted.

A1 – 19 Addition: EN7 Electrical Details - Added

A1 – 20 Addition: Level measurement will be required and reported back to SCADA in all basins. This includes all wetwell, pre-EQ, SBR, post-EQ and Aerobic Digesters.

A1 – 21 Modification: The following sheets have been modified as follows:
1. C-2: Notes have been modified.
2. C-13: Added flowline elevations to sludge piping
3. C-14A: Notes
4. HW-2, HW-7: Notes; Gate Schedule; Valve Schedule
5. PEQ-1, PEQ-2, AD-1, AD-2, AD-3: Notes; Valve Schedule; Piping Schedule
6. SBR-1, SBR-2 - Notes; Valve Schedule; Piping Schedule

7. UV-1, UV-2: Piping Schedule; Added Wall Mount Utility Stations; Gate Schedule
8. LS-1, LS-2: Piping Schedule; Low Profile Cascade Aerator (LPCA) narrowed and will be grouted between LPCA and wall to height to LPCA
9. WAS-1: Piping schedule; Added door to enclosure; Notes
10. Belt Filter Press Sheets: Revised. Complete new sheets. These sheets govern all other sheets pertaining to belt press area (electrical, architectural and structural.)
11. DT-5: Wall Mounted Utility Station; RPZ Riser (Interior)
12. DT-7: Backflow Preventer
13. DT-9: Detail Drawing; Notes; Piping Schedule

A1 – 22 Modification: CMU wall in belt press room shall be 11' in height and extend to an elevation of 976.33 (supersedes architectural drawings)

A1 – 23 Miscellaneous: Headworks electrical equipment to be staggered between columns for ease of access.

Southside

A1 – 24 Modification: The following sheets have been modified as follows:

1. C-1: Notes
2. HW-1: Gate schedule; Notes
3. ILS-2, ILS-2A & ILS-2B: Gate Schedule; Valve Schedule; Notes
4. MM-1: Piping/Piping schedule
5. SW-2, SW-3: Gate Schedule; Notes
6. DT-7: Backflow Preventor Detail

Should you have any additional questions about the above modifications and their intent, please post to the CivCast website.

Issued by:
Wall Engineering, LLC



Brandon Wall, P.E.
President

Spec Section	Equipment	Manufacturer / Supplier
41_21_23.15	Belt Conveyor System	
41_22_00	Cranes & Hoists	
41_22_27	Monorail & Hoists	
43_11_16	High Efficiency Blower Packages	
43_23_31.35	Non-Potable Water Pumps	
43_23_58.03	Positive Displacement Rotary Lobe Pumps	
43_25_13.13	Submersible Pump System	
46_07_54	Waste Activated Sludge Pump Station	
46_21_53	Perforated Fine Screen	
46_21_73.13	Screw Washer Compactor	
46_23_24	Grit Removal, Washing & Dewatering	
46_33_33	Polymer Blending & Feed Equipment	
46_41_23	Submersible Mixers	
46_51_55	Low Profile Cascade Aerator	
46_53_57	SBR & Aerobic Digester	
46_66_57	UV Disinfection Equipment	
46_76_21.03	Belt Filter Press System	
41_22_00	Cranes & Hoists	
28_21_01	CCTV	
32_31_13	Fencing	
40_05_33	HDPE	
40_05_19.20	Ductile Iron Piping	

List of manufacturers / suppliers above must represent either the specified manufacturer / supplier or an alternate that has been approved and ADDED BY ADDENDUM. Listing an unapproved manufacturer / supplier may deem the bid non-responsive since the basis of bid would be with unapproved equipment.

SECTION 03_30_00

CAST-IN-PLACE CONCRETE (ADDENDUM #1)

PART 1 GENERAL

1.1 SUMMARY

A. Cast-in-place concrete work, as indicated on the drawings and specified herein.

B. All listed iron and steel products used in this project must be produced in the United States. The term "iron and steel products" means the following products made primarily of iron or steel: lined or unlined pipes and fittings, manhole covers and other municipal castings, hydrants, tanks, flanges, pipe clamps and restraints, valves, structural steel, reinforced precast concrete, and construction materials. The deminimis and minor components waiver apply to this contract for minor components.

1.2 RELATED SECTIONS

A. Section 01_00_01 Basic Requirements

B. Section 01_33_01 General Submittal Requirements

C. Section 03_11_00 Concrete Formwork

D. Section 03_20_00 Concrete Reinforcement

E. Section 03_15_20 Concrete Joints & Embedded Items

1.3 SUBMITTALS

A. Submittals for products and miscellaneous items in this specification section shall be submitted in accordance with Section 01_33_01 General Submittal Requirements and related submittal sections if included.

B. Submit mix designs for each specified concrete and grout type. Design data shall include the name of the concrete supplier; manufacturer/supplier and type of cement used; size and type of aggregate; proportional weights of cement, aggregate, and water per cubic yard of concrete; name and quantity of admixture used.

C. Concrete Mix Design
   1. Concrete mix design.
      a. Mixture Identification and intended use.
      b. Minimum 28-day compressive strength.
   2. Constituent quantities per cubic yard.
   3. Sources of all concrete mix components including coarse aggregate, fine aggregate, cement, water, admixtures, and pozzolans where included.
   4. Cement type and manufacturer, include chemical analysis (mill test report) for each cement type to be used.

5. Pozzolan type and source; include chemical analysis for each pozzolan type to be used.
6. Water/cement ratio, by weight.
7. Air content
8. Mix design slump.
9. Nominal maximum aggregate size.
10. Average compressive strengths conforming to the requirements of ACI 318 at 28 days.
11. Provide both average strengths and sample standard deviation. Provide results at 7 and 14 days if available.
12. Laboratory shrinkage test results for concrete mix designs, where specified.

D. Aggregate for Mix Design:
1. Laboratory sieve analysis, conforming to ASTM C33.
2. Verification that aggregate is not "deleterious," or "potentially deleterious." Provide documentation or other certification that aggregate does not contain deleterious substances and has been used without issues on previous projects.

E. Admixtures.
1. Submit Manufacturer's data brochures on all admixtures proposed for use and provide certification of compliance with specified ASTM standards for each admixture.

F. Submit Manufacturer's data sheets and product specifications for curing compounds and items specified in other Sections including form release agents, bonding agents, etc. Identify the locations where each will be used in the Work as a part of the submittal.

1.4 REFERENCES

A. The Contractor and/or Manufacturer shall follow the standards listed below, except as otherwise specified herein. The latest revision or edition in effect at the time of bid opening shall be utilized.

B. American Society for Testing and Materials (ASTM).
1. ASTM C31: Standard Practice for Making and Curing Concrete Test Specimens in the Field
2. ASTM C33: Standard Specification for Concrete Aggregates
3. ASTM C39: Standard Test Method for Compressive Strength of Cylindrical Concrete Specimens
4. ASTM C42: Standard Test Method for Obtaining and Testing Drilled Cores and Sawed Beams of Concrete
5. ASTM C87: Standard Test Method for Effect of Organic Impurities in Fine Aggregate on Strength of Mortar
6. ASTM C94: Standard Specification of Ready-Mixed Concrete
7. ASTM C109: Standard Test Method for Compressive Strength of Hydraulic Cement Mortars
8. ASTM C125: Terminology Relating to Concrete and Concrete Aggregates
9. ASTM C143: Standard Test Method for Slump of Hydraulic Cement Concrete
10. ASTM C150: Standard Specification for Portland Cement
11. ASTM C156: Standard Test Method for Water Retention Through Liquid Membrane- Forming-Curing Compounds for Concrete

12. ASTM C171: Standard Specification for Sheet Materials for Curing Concrete
13. ASTM C172: Standard Practice for Sampling Freshly Mixed Concrete
14. ASTM C173: Standard Test Method for Air Content of Freshly Mixed Concrete by the Volumetric Method
15. ASTM C191: Standard Test Method for Time of Setting of Hydraulic Cement by Vicat Needle
16. ASTM C192: Standard Practice for Making and Curing Concrete Test Specimens in the Laboratory
17. ASTM C231: Standard Test Method for Air Content of Freshly Mixed Concrete by the Pressure Method
18. ASTM C260: Standard Specification for Air-Entraining Admixtures for Concrete
19. ASTM C293: Standard Test Method for Flexural Strength of Concrete (Using Simple Beam with Center-Point Loading)
20. ASTM C309: Standard Specification for Liquid Membrane-Forming Compounds for Curing Concrete
21. ASTM C330: Standard Specification for Lightweight Aggregates for Structural Concrete
22. ASTM C494: Standard Specification for Chemical Admixtures for Concrete
23. ASTM C595: Standard Specification for Blended Hydraulic Cements
24. ASTM C579: Standard Test Methods for Compressive Strength of Chemical-Resistant Mortars, Grouts, Monolithic Surfacings, and Polymer Concretes
25. ASTM C580: Standard Test Method for Flexural Strength and Modulus of Elasticity of Chemical-Resistant Mortars, Grouts, Monolithic Surfacings, and Polymer Concretes
26. ASTM C595: Standard Specification for Blended Hydraulic Cements
27. ASTM C618: Standard Specification for Coal Fly Ash and Raw or Calcined Natural Pozzolan for Use in Concrete
28. ASTM C683: Standard Specification for Concrete Made by Volumetric Batching and Continuous Mixing
29. ASTM C806: Standard Test Method for Restrained Expansion of Expansive Cement Mortar
30. ASTM C827: Standard Test Method for Change in Height at Early Stages of Cylindrical Specimens of Cementitious Mixtures
31. ASTM C845: Standard Specification for Expansive Hydraulic Cement
32. ASTM C856: Standard Practice for Petrographic Examination of Hardened Concrete
33. ASTM C878: Standard Test Method for Restrained Expansion of Shrinkage-Compensating Concrete
34. ASTM C989: Standard Specification for Slag Cement for Use in Concrete and Mortars
35. ASTM C1017: Standard Specification for Chemical Admixtures for Use in Producing Flowing Concrete
36. ASTM C1077: Standard Practice for Agencies Testing Concrete and Concrete Aggregates for Use in Construction and Criteria for Testing Agency Evaluation
37. ASTM C1107: Standard Specification for Packaged Dry, Hydraulic-Cement Grout (Non-Shrink)
38. ASTM C1157: Standard Performance Specification for Hydraulic Cement
39. ASTM C1218: Standard Test Method for Water-Soluble Chloride in Mortar and Concrete
40. ASTM C1240: Standard Specification for Silica Fume used in Cementitious Mixtures
41. ASTM C1260: Test Method for Potential Alkali Reactivity of Aggregates (Mortar-Bar Method)

42. ASTM C1293: Standard Test Method for Determination of Length Change of Concrete Due to Alkali-Silica Reaction
43. ASTM C1602: Standard Specification for Mixing Water Used in the Production of Hydraulic Cement Concrete
44. ASTM E329: Standard Specification for Agencies Engaged in Construction Inspection, Testing, or Special Inspection

C. American Concrete Institute (ACI).
1. ACI 117: Specification for Tolerances for Concrete Construction and Materials and Commentary
2. ACI 211.1: Standard Practice for Selecting Proportions for Normal, Heavy-weight and Mass Concrete.
3. ACI 214: Guide to Strength Test Results of Concrete
4. ACI 223: Guide for the Use of Shrinkage Compensating Concrete
5. ACI 301: Specification for Structural Concrete
6. ACI 302.1: Guide for Concrete Floor and Slab Construction
7. ACI 304: Guide for Measuring, Mixing, Transporting & Placing Concrete
8. ACI 304.2R: Placing Concrete by Pumping Methods
9. ACI 305R: Guide to Hot Weather Concreting
10. ACI 305.1: Specification for Hot Weather Concreting
11. ACI 306R: Guide to Cold Weather Concreting
12. ACI 306.1: Standard Specification for Cold Weather Concreting
13. ACI 308: Guide to Curing Concrete
14. ACI 308.1: Specification for Curing Concrete
15. ACI 309: Guide for Consolidation of Concrete
16. ACI 318: Building Code Requirements for Structural Concrete.
17. ACI 350: Code Requirements for Environmental Engineering Concrete Structures

1.5 QUALITY ASSURANCE

A. Conform to ACI 305R when concreting during hot weather.

B. Conform to ACI 306R when concreting during cold weather.

C. Manufacturer's Qualifications:
1. Manufacturer must be certified by the National Ready Mix Concrete Association's Certification of Ready Mixed Concrete Production Facilities.

D. Concrete Consistency
1. Test for slump shall be performed at the job site immediately prior to placing in accordance with ASTM C143. Slump tests shall be performed for each batch of concrete to indicate workability and consistency from batch to batch.
2. If the slump is outside the allowed limits, the concrete shall be rejected. Concrete showing either poor cohesion or poor coating of the coarse aggregate with paste shall be remixed or rejected.
3. If the slump is within the allowable limit, but excessive bleeding, poor workability, or poor finishability are observed, the concrete shall be rejected and changes in the concrete mix shall be made only by an adjustment of one or more of the following:
   a. The gradation of aggregate.
   b. The proportion of fine and coarse aggregate.

c. The percentage of entrained air, within the allowable limits.

E. Concrete Temperature
1. Comply with ACI 301, ACI 306.1 and ACI 305.1
2. Concrete temperature shall be taken immediately before placement with the point of measurement being in the chute or bucket.
3. Perform temperature test for each batch and record result on batch ticket.
4. If fresh concrete temperature does not meet requirements in this section the concrete shall be rejected.

F. Concrete Air Content
1. Test for air content shall be made on a fresh concrete sample for each batch prior to placing in forms.
2. Air content for concrete made of ordinary aggregates having low absorption shall be made in accordance with either ASTM C231, or ASTM C173. If light weight aggregates or aggregates with high absorptions are used, use ASTM C173.
3. If air content of fresh concrete does not meet requirements specified in this Section, the concrete shall be rejected. Do not place concrete that does not meet the air entrainment requirements of this Section.

G. Compressive Strength
1. Compression test specimens shall be made, cured and tested in accordance with ASTM C31 and ASTM C39.
2. Compressive strength tests shall be made on cylinders at 7 and 28 days. The value of each test result shall be the average compressive strength of a minimum of 2 cylinders taken at the same time from the same batch of concrete.
3. Compressive test specimens shall be 6” x 12” cylinders; 4” x 8” cylinders are not permitted.
4. Sets of concrete test cylinders shall be cast for each concrete pour as follows.
   a. A "set" of test cylinders consists of a minimum of six cylinders, two to be broken and strengths averaged at seven days; and two broken and strengths averaged at 28 days. Two hold cylinders will remain unbroken so that they will be available to be broken upon unforeseen circumstances or upon the option of the Engineer to break cylinders at different times.
   b. A minimum of one “set” of cylinders will be made for each concrete pour up to 25 CY in volume. For pours larger than 25 CY, additional “sets” of cylinders will be made for each additional 25 CY of concrete poured.
5. Evaluation of compressive strength for compliance with design requirements will be conducted by the Engineer per ACI 318 – Section 26.12 based on the results of the 28 day test.

H. Failure to Meet Requirements
1. The Owner may withhold payment for any section of concrete which does not meet the requirements of the Plans and Specifications. Withheld payment shall be based upon unit prices established for concrete, if available. Payment shall be withheld until the unacceptable concrete has been repaired or removed and replaced or otherwise brought into conformance with the Plans and Specifications.
2. Concrete Strength
   a. If the 28 day strength test results fall below required values, additional curing may be performed and test cores may be obtained in accordance with ASTM C42 with approval of the Engineer. Additional curing, core

removal and testing, if allowed by the Engineer, shall be at the Contractor's expense.

b. If the strength results from test cores do not exhibit the required strength, the Engineer or Owner's Representative reserves the right to require strengthening, replacement of substandard materials and/or additional testing at the Contractor's expense. The choice of remedy is at the sole discretion of the Engineer or Owner's Representative.

3. Other Concrete Properties

a. If concrete properties besides strength do not meet required values, the Engineer may require concrete samples to be obtained in accordance with ASTM C42 and evaluated in accordance with ASTM C856 at the Contractor's expense.

b. If concrete properties besides strength do not meet required values, and the results of additional examination per ASTM C856 are deemed unsatisfactory at the sole discretion of the Engineer, the Owner reserves the right to require strengthening, replacement of substandard materials and/or additional testing at the Contractor's expense.

1.6 DESCRIPTION/DESIGN REQUIREMENTS

A. All concrete shall be 4,000 psi unless otherwise noted. See Section 2.4 for additional requirements.

B. Concrete shall not be placed in any form until formwork has been inspected by the Engineer and permission is given to start placing.

C. Notify Engineer a minimum of 48 hours prior to concrete placement.

D. Fly ash will not be accepted for use in mix designs

E. Provide PVC waterstop at all submerged joints and as outlined in the plans and other specification sections.

F. Retempering by adding water to concrete at the jobsite will not be permitted unless prior approval is obtained from the Engineer.

G. All slabs to receive 10ml vapor barrier prior to concrete placement

H. All cracks greater than 0.05" wide not located in control joints shall be sealed by cutting a bevel groove on the water side of the crack 1/2" to 3/4" wide and caulking with epoxy sealant. Crack widths shall be measured at the concrete surface.

PART 2 PRODUCTS

2.1 CONCRETE MATERIALS

A. Cement: ASTM C150, Type I/II, Type I – Only type of one brand of cement shall be used.

B. Coarse Aggregates: Shall consist of gravel, crushed gravel, crushed stone, air-cooled blast furnace slag, or a combination thereof, conforming to ASTM C-33 with a maximum size of

1½-inches. Where required due to minimum spacing of reinforcing steel, maximum size of coarse aggregate shall be reduced to 1-inch with prior written approvalof the Engineer.

C. Fine Aggregate: Shall conform to ASTM C-33 and shall be washed river sand composed of clean, uncoated grains of strong materials.

D. Abrasive aggregates shall be equal to fine (c.f.) "Alumdum" aggregate as manufactured by Norton Company, Worcester, Mass. or "Frictex NS" as manufactured by Sonneborn - Contech. Use only as approved by Engineer.

E. Water: Potable water free from detrimental chemicals and solids that will decrease the strength of the concrete.

F. Embedded Items: Embedded items shall be of the size and type shown or as needed for the application.

G. Curing Materials: Curing materials shall be burlap, impervious sheets, or membrane-forming compounds.

H. Dowels: Plain carbon steel bars, minimum yield point of 60,000 psi for use in slabs on grade.

I. Expansion Joint Filler Strips: Premolded nonextruding, resilient bituminous or non-bituminous type for use in concrete paving or construction, thickness as shown.

J. Form Materials: Wood, metal or other Engineer approved materials that will produce the specified finishes without adversely affecting the concrete surfaces in accordance with Section 03_11_00 Concrete Formwork.

K. Form Coating: Nonstaining form oil or form-release agent that will not deleteriously affect concrete surfaces nor impair subsequent applications.

L. Form Ties: Metal, factory-fabricated removable snap-off type, that will not leave holes less than 1/4 inch nor more than 1 inch deep and not more than 1 inch in diameter.

M. Joint Sealant: As approved by Engineer for sealing joints in concrete against moisture infiltration for specific application.

N. Reinforcement: Bar reinforcement shall be deformed, Grade 60 conforming to ASTM A615. Mesh reinforcement shall be welded wire fabric with wires at right angles to eachother. See Section 03_20_00 Concrete Reinforcement.

O. Bonding Agent: As approved by Engineer.

P. Admixtures: Air-entraining, retarders, and other admixtures as approved by Engineer
1. Air-entraining admixture: ASTM C260.
2. Water-Reducing Admixture: ASTM C494/C494M, Type A.
3. Retarding Admixture: ASTM C494/C494M, Type B.
4. Water-Reducing and -Retarding Admixture: ASTM C494/C494M, Type D.
5. High-Range, Water-Reducing Admixture: ASTM C494/C494M, Type F.

6. High-Range, Water-Reducing and -Retarding Admixture: ASTM C494/C494M, Type G.
7. Plasticizing and Retarding Admixture: ASTM C1017/C1017M, Type II.
8. Antimicrobial, Crystalline Waterproofing Admixture
    a. Manufacturer(s): Xypex Admix C500 Bio San or engineer approved equal
    b. Dosage rate shall be minimum 1% by weight of cementitious content. No exceptions.
    c. Locations: All primary treatment unit concrete structures that are subject to direct or indirect exposure to wastewater. Units (Northside & Southside)
        1) Headworks
        2) Influent Lift Station
    d. Performance Requirements:
        1) Product shall demonstrate a minimum of 99% reduction in bacterial count formation after 10 years of exposure in wastewater service.
9. Crystalline Waterproofing Admixture
    a. Manufacturer(s): Xypex Admix C500 or engineer approved equal
    b. Dosage rate shall be minimum 2% by weight of cementitious content. No exceptions.
    c. Locations: All concrete structures that are subject to direct or indirect exposure to wastewater, excluding primary treatment units.
    d. Performance Requirements:
        1) Permeability: Independent testing shall be performed according to U.S. Army Corps of Engineers CRD-C48 - Mod Permeability of Concrete. Under CRD-C48 treated concrete samples that are no greater than 2 inches thick shall be pressure tested to 150 psi (350 foot head of water). The treated samples shall exhibit no measurable leakage against control samples which shall exhibit full saturation and measurable leakage. In all case cases treated and untreated samples shall have the same mix design.
        2) DIN 1048/ EN 12390 "Water Impermeability of Concrete"/Requirement: Treated and untreated samples that are 120mm thick shall be subjected to hydrostatic pressure for 3 days (Minimum of 3 samples of each). Control samples shall have a minimum of 100mm of penetration (average of samples). Treated samples shall show a minimum of 90% reduction in depth of water penetration when compared to the control sample (average of samples). In all case cases treated and untreated samples shall have the same mix design.
        3) Crack Bridging Capability: Requirement: Crack sealing effect shall be evidenced by the following when comparing treated and untreated samples:
            a) Cracks shall be minimum 0.4mm wide.
            b) Cracks for treated and untreated samples shall both leak initially.
            c) Cracks for treated samples shall be completely sealed against the passage of water after 21 days or less.
            d) Cracks for untreated samples shall continue to leak after 21 days or more."

2.2 ADMIXTURES

A. A retarding admixture, conforming to ASTM C-494, pre-tested with job materials under job conditions, may be used if approved by Engineer, whenever necessary to prevent cold joints due to the quantity of concrete placed, to permit revibration of the concrete, to offset the effects of high concrete temperature rise.

2.3 ACCESSORIES

A. Curing Compound: Concrete curing compound shall be of a nature and composition not deleterious to concrete and shall be of a standard and uniform quality ready for use as shipped by the manufacturer. At the time of use, the curing compound shall be in a thoroughly stirred condition. Curing compounds shall not be diluted by the addition of solvent or thinners, or be altered in any manner without the specific approval of and ina manner prescribed by the manufacturer. Curing compound shall conform to the requirements of ASTM C-309 Type 1.

1. The curing compound shall be sufficiently transparent and free from color so that there will be no permanent change in the color of the concrete. The compound shall contain, however, a temporary dye of sufficient color to make the membrane clearly visible for a period of at least four hours after application.

2.4 CONCRETE MIX QUALITY AND CONTROL

A. No fly ash will be permitted in mix designs.

B. Design: Concrete shall be composed of Portland cement, fine aggregate, coarse aggregate and water. All concrete shall be designed by an approved testing laboratory in accordance with the ACI Standard Recommended Practice for Selecting Proportions for Concrete (ACI-211) to produce the strength for each class of concrete specified, and with slumps and maximum sizes of coarse aggregate in accordance with the requirements outlined below.

C. Prior to placing any concrete, the Contractor shall submit for review mix designs for each specified concrete and grout type.

D. Concrete Classifications

Class	Min. 28-Day Compressive Strength (psi)	Coarse Aggregate Size (in.)	Max. Water Cement Ratio	Max. Slump (in.)	Min. Cement Content (lb. per CY)
A	4000	1.5 (No. 467)	0.45	5	517
B	3000	1.5 (No. 467)	0.50	4	470
C	4000	1.0 (No. 57)	0.45	4	564
D	5000	0.75 (No. 67)	0.45	5	611

E	1500	1.5 (No. 467)	0.70	4	376
F	4000	0.375 (No. 8)	0.45	8	611

E. Concrete Usage

Class	Usage
A	All reinforced concrete unless otherwise specified
B	Concrete Encasement; Sidewalks
C	Drilled Shafts; Pumped Concrete; Thin Wall Sections
D	Precast Concrete and Panels
E	Lean Concrete Backfill; Foundation Seal; Blocking/Cradling
F	Underground Duct Banks

F. In not specifically noted in the table above, concrete shall be 4,000 psi.

G. The slump shall not exceed the maximum specified above for the type of construction for which it is to be used. The 28-day compressive strength determined in accordance with current ASTM Specifications C-39 and C-31 and with specimens cured in accordance with C-31 shall not be less than that shown above for the specified class of concrete. No water will be added after the amount specified by the mix design.

H. If admixtures are used, slump shall be as approved by Engineer.

I. Production of Concrete: All ready-mixed concrete shall be batched, mixed and transported in accordance with "Specifications for Ready-Mixed Concrete (ASTM C-94)". Plant equipment and facilities shall conform to the "Check List for Certification of Ready-Mixed Concrete Production Facilities" of the National Ready-Mixed Concrete Association.

J. Laboratory Testing: The Owner shall engage an independent testing laboratory to conduct concrete tests. Unless otherwise informed the Contractor will be responsible for sampling concrete for test cylinders, recording, providing all materials required, and for making all slump tests in the field directed by the Engineer. All costs in connection with work performed by the laboratory shall be paid by the Owner. When cylinder reports indicate concrete does not meet strength requirements delineated in the Contract Documents, the Contractor shall be responsible for the costs of developing a redesign of the concrete mix.

K. At least one test shall be made on fresh concrete for each 60 cubic yards of each class of concrete (or fraction thereof) placed on any one day and in any event, not less than one test for each class of concrete each day it is used. Testing shall be done in accordance with the following ASTM Specifications, latest edition:
   1. C-172 - Standard Method of Sampling Fresh concrete
   2. C-31 - Standard Method of Making and Curing Concrete Compression & Flexure Test Specimens in the Field

3. C-39 - Standard Method of Test of Compressive Strength of Molded concrete Cylinders
4. C-143 - Standard Method of Slump Test for Consistency of Portland Cement Concrete

L. Before any concrete is poured, the Contractor shall construct a storage box in accordance with ASTM Specification C-31. Each set of tests shall consist of one slump test and three compression test cylinders. All cylinders shall be kept in the storage box for the first 24 hours. The three cylinders shall be laboratory cured and tested for adequacy of the design for strength of the concrete in accordance with ASTM Specification C-31. One cylinder shall be tested at seven days and two at twenty-eight days.

M. Failure of Concrete to Meet Strength Requirements: The concrete shall be considered acceptable if, for any one class of concrete, the average of all tests or any five consecutive tests is equal to or greater than the specified strength, provided that no more than one test of the five falls between 90 percent and 100 percent of the specified strength. The only cylinders to be used for determination of concrete acceptability will be those laboratory cured and tested at twenty-eight days. When it appears the tests of laboratory-cured cylinders will fail to meet these requirements, the Engineer may require changes in the proportions of concrete for the remainder of the work in order to meet the strength requirements. In addition, the Engineer may also require additional curing not to exceed a total of twenty-one days on portions of the concrete already poured.

N. The Engineer may also require tests in accordance with Methods of Securing, Preparing and Testing Specimen from Hardened Concrete for Compressive and Flexural Strengths (ASTM Specifications C-42) when the concrete cylinder tests fail to meet strength requirements. In the event there still is question as the quality of the concrete in the structure, the Engineer may require load tests for that portion where the questionable concrete has been placed. Such load tests will be made as outlined in Chapter 20 of American Concrete Institute Building Code. (ACI 318-71), and shall be at the expense of the Contractor.

O. Removal of Under Strength Concrete: If the above tests indicate that a particular batch of previously placed concrete is under strength, the Engineer may direct that the under strength batch be removed and replaced. The removal of the under strength concrete shall also include the removal of concrete that has obtained the required strength if the Engineer deems this necessary to obtain structural or visible continuity when the concrete is replaced.

P. The removal, and replacement of any under strength concrete, shall be made at no additional cost to the Owner. This shall include any new formwork required or any reinforcing steel that may be required. The Owner shall not be charged any additional costs for any extra work that is required because of the failure of any concrete to meet the minimum test requirements.

PART 3 EXECUTION

3.1 EXAMINATION

A. Verify requirements for concrete cover over reinforcement as referenced in Section 03_20_00 are met.

B. Verify that anchors, seats, plates, reinforcement and other items to be cast into concrete are accurately placed, positioned securely, and will not cause hardship in placing concrete.

3.2 PREPARATION

A. All items, including lines and grades, forms, waterstops, reinforcing, inserts, piping, electrical, plumbing and the Contractor's concreting materials and equipment shall be complete and in compliance with the plans and specifications before proceeding with concrete placement.

B. Concrete finishing shall be completed in daylight hours. When this is not possible, brilliantly light the work site so that all operations are plainly visible.

C. Water shall be removed from excavations before concrete is deposited. Hardened concrete, wood chips, shavings, and other debris shall be removed from interior of forms and inner surfaces of mixing and conveying equipment. Wood forms shall be oiled or, except in freezing weather, wetted with water in advance of pouring. Contractor shall verify that all reinforcement is properly place, aligned, and secured prior to pouring concrete and shall coordinate with Resident Project Representative.

D. Soil at bottom of foundation systems is subject to testing for soil bearing value by the testing laboratory. Place concrete immediately after approval of foundation excavations. Excavate and backfill as necessary to complete the concrete work. Place concrete on sub-grades that are well compacted to level and true grade. Before concrete is poured in areas between slabs on grade previously poured, recheck compaction of subgrades and if necessary, recompact to avoid settlement of slabs at joints. Seal extremely porous subgrades. Remove all ice, debris and excess water from subgrades. After completion of the concrete work, backfill all excavations.

E. Mix concrete only in quantities for immediate use. Discard concrete which has set; re-tempering is not permitted. **Completely discharge concrete at the site within one hour and 30 minutes after adding cement to aggregate. In hot weather, reduce this time to one hour or less to prevent stiffening of concrete before it is placed.**

F. If concrete arrives at the project with slump below that specified, water may be added only if the addition of water does not exceed either the maximum permissible water-cement ratio or maximum slump. Mix adjustments to obtain specified slump must be approved by the Engineer.

G. Protection from Adverse Weather
1. If adverse weather is imminent, no concrete placement is permitted. Do not permit rainwater to increase mixing water or to damage the surface finish. If rainfall occurs after placing operations begin, provide adequate covering to protect the work.

3.3 CONVEYING

A. Concrete shall be conveyed from mixer to forms as rapidly as practicable and by methods which will prevent segregation and loss of ingredients. It shall be deposited as nearly as practicable in its final position. Chutes used shall be such that concrete slides in them and does not flow. Chutes, if permitted, shall have a slope of less than 1 on 2. Where a vertical

drop greater than 5 feet is necessary, placement shall be through elephant trunks or similar devices to prevent segregation.

3.4 PLACING

A. Completely discharge concrete at the site within one hour and 30 minutes after adding cement to aggregate. In hot weather, reduce this time to one hour or less to prevent stiffening of concrete before it is placed.

B. Unless otherwise specified, all concrete shall be placed upon clean, damp surfaces free from running water, or upon properly consolidated fills, but never upon soft mud or dry, porous earth. The concrete shall be compacted and worked in an approved manner into all corners and angles of the forms and around reinforcement and embedded fixtures as to prevent segregation of the coarse aggregate. Construction of forms for the lifts of vertical.

C. Deposit concrete continuously in one layer or in horizontal layers of such thickness that no new concrete is placed on concrete that has hardened enough to cause seams or planes of weakness.
   1. If a section cannot be placed continuously, provide construction joints as indicated.
   2. Deposit concrete to avoid segregation.
   3. Deposit concrete in horizontal layers of depth not to exceed formwork design pressures and in a manner to avoid inclined construction joints.
   4. Consolidate placed concrete with mechanical vibrating equipment in accordance with ACI 301.
      a. Do not use vibrators to transport concrete inside forms.
      b. Insert and withdraw vibrators vertically at uniformly spaced locations to rapidly penetrate placed layer and at least 6 inches into preceding layer.
      c. Do not insert vibrators into lower layers of concrete that have begun to lose plasticity.
      d. At each insertion, limit duration of vibration to time necessary to consolidate concrete, and complete embedment of reinforcement and other embedded items without causing mixture constituents to segregate.

D. Deposit and consolidate concrete for floors and slabs in a continuous operation, within limits of construction joints, until placement of a panel or section is complete.
   1. Do not place concrete floors and slabs in a checkerboard sequence.
   2. Consolidate concrete during placement operations, so concrete is thoroughly worked around reinforcement and other embedded items and into corners.
   3. Maintain reinforcement in position on chairs during concrete placement.
   4. Screed slab surfaces with a straightedge and strike off to correct elevations.
   5. Level concrete, cut high areas, and fill low areas.
   6. Slope surfaces uniformly to drains where required.
   7. Begin initial floating using bull floats or darbies to form a uniform and open-textured surface plane, before excess bleedwater appears on the surface.
   8. Do not further disturb slab surfaces before starting finishing operations.

3.5 VIBRATION

A. Consolidate concrete, including floor slabs on grade, by internal concrete vibrators supplemented by hand-spading, rodding, or tamping so that the concrete is thoroughly

worked around reinforcement and embedded items and into the corners of forms. Consolidate each layer of concrete with previously placed layers in a manner that will eliminate all air or stone pockets which may cause honeycombing, pitting, or planes of weakness. Internal vibrators shall produce a minimum frequency of 7000 impulses per minute when submerged in concrete. Do not use vibrators to transport concrete. Insert and withdraw vibrators at uniformly spaced points not farther apart than the visible effectiveness of the machine. Duration of vibration shall be limited to time necessary to produce satisfactory consolidation without causing objectionable segregation. The vibrating equipment shall at all times be adequate in number of units and power to properly consolidate all concrete. Spare units shall be on hand as necessary to ensure such adequacy.

3.6 CONSTRUCTION JOINTS

A. Construction joints shall be in accordance with Section 03_15_20 – Concrete Joints & Embedded Items. Waterstops shall be installed in all construction joints below grade or in liquid containing structures as noted on the plans.

3.7 BONDING

A. Roughen surfaces of set concrete at all joints, except where bonding is obtained by use of a concrete bonding agent, and clean surfaces of laitance, coatings, loose particles, and foreign matter. Roughen surfaces in a manner to expose bonded aggregate uniformly and to not leave laitance, loose particles of aggregate, or damaged concrete at the surface.

B. Prepare for bonding of fresh concrete to new concrete that has set but is not fully cured, as follows:

1. At joints between footings and walls and between walls and beams or slabs they support, and elsewhere unless otherwise specified herein, dampen, but do not saturate, the roughened and cleaned surface of set concrete immediately before placing fresh concrete.
2. At joints in exposed work; at vertical joints in walls; at joints in girders, beams, supported slabs, and other structural members; and at joints designed to contain liquids; dampen, but do not saturate, the roughened and cleaned surface of set concrete and apply either a liberal coating of neat cement grout or a commercial bonding agent.
3. Use neat cement grout consisting of equal parts Portland cement and fine aggregate by weight and not more than 6 gallons of water per sack of cement. Apply with a stiff broom or brush to a minimum thickness of 1/16". Deposit fresh concrete before cement grout has attained its initial set.

3.8 PATCHING

A. Any concrete which is not formed as shown on the Plans, or for any reason is out of alignment or level or shows a defective surface shall be considered as not conforming with the intent of these Specifications and shall be removed from job by Contractor at his expense, unless the Engineer grants permission to patch defective area, which shall be done in accordance with the following procedures.

B. Permission to patch any such area shall not be considered a waiver of the right of the Engineer to require complete removal of defective work if patching does not, in the opinion

of the Engineer, satisfactorily restore quality and appearance of surface. Suitable non-shrink, latex or epoxy mortar shall be used for patching and repairing defective surface if directed by the Engineer.

C. After removing forms, all concrete surfaces shall be inspected and any poor joints, void, stone pockets, all tie holes, or other defective areas shall be patched, if permitted by the Engineer. Where necessary, defective areas shall be chipped away to a depth of not less than 1" with edges perpendicular to the surface. Area to be patched and a space at least 6" wide entirely surrounding it shall be wetted to prevent absorption of water from the patching mortar. A grout of equal parts Portland cement and sand, with sufficient water to produce a brushing consistency, shall then be well brushed into the surface followed immediately by the patching mortar. The patch shall be made of the same material and of approximately the same proportions and shall not be richer than one part cement to three parts sand. White Portland cement shall be substituted for a part of the gray Portland cement to match color of the surrounding concrete. The proportion of white and gray cements shall be determined by making a trial patch. The amount of mixing water shall be as little as consistent with the requirements of handling and placing. The mortar shall be retempered without the addition of water by allowing it to stand for a period of one hour during which time it shall be mixed occasionally with a trowel to prevent setting.

D. The mortar shall be thoroughly compacted into place and screeded off so as to leave patch slightly higher than surrounding surface. It shall then be left undisturbed for a period of one to two hours to permit initial shrinkage before being finally finished. The patch shall be finished in such a manner as to match the adjoining surface. On exposed surfaces where unlined forms have been used, the final finish shall be obtained by striking off the surface with a straightedge spanning the patch and held parallel to the direction of the form marks.

E. Tie holes left by withdrawal of rods or the holes left by removal of ends of ties shall be filled solid with mortar after first being thoroughly wetted.

3.9 SLABS ON GRADE

A. The Contractor shall insure that subgrade has been thoroughly compacted and leveled prior to concrete placement. Sprinkle all sub-grades with water no more than half an hour prior to placing concrete.
   1. Place vapor barrier below interior slabs unless noted otherwise. Sprinkling of fill is not necessary when using vapor barrier. Lap vapor barrier 6" in direction of pour, and seal laps with specified mastic. Repair all ruptures of the vapor barrier that might occur before or during concrete pour.
   2. The Contractor shall insure that all reinforcing steel is located properly prior to pour, and that steel will not be vertically displaced during the pour.

3.10 EDGING

A. Edges exposed to view on the outside of structures, footings, pads and slabs, and all those in the inside of structures shall be chamfered, unless otherwise approved by the Engineer. Chamfer shall be at an angle of 45 degrees, as shown on the Plans. If so required by the Engineer, however, the Contractor shall provide square edges for any portion of the work.

3.11 SLAB FINISHES

A. Exterior Walks: The top surface shall be "slip-resistant" as follows:
   1. The surface shall be steel troweled as noted in Paragraph C below, and have a final finish applied by brushing lightly with a soft bristle brush to form a slightly roughed surface.

B. Interior slabs that are to receive a finish floor covering (this does not include ceramic tile covering) shall be finished by tamping the concrete with special tools to force the coarse aggregate below the surface, then screeding and floating with straightedges to bring the surface to the required finish level. While the concrete is still green but sufficiently hardened to bear a man's weight without deep imprint, it shall be wood floated to a true and even plane with no coarse aggregate visible. Sufficient pressure shall be used on the wood floats to bring moisture to the surface. After surface moisture has disappeared, surfaces shall be steel-trowelled to a smooth, even, impervious finish, free from trowel marks. After cement has set enough to ring the trowel, surface of all slabs shall be given a second steel trowelling to a burnished finish.

C. Interior slabs to receive fill or mortar setting bed shall be finished by tamping concrete with special tools to force coarse aggregate below the surface, and screeded with straightedges to bring surface to required finish plane. Surface shall be left roughened sufficiently to produce good bond with topping material.

D. Top and bottom slabs of all structures and water carrying conduits except as noted otherwise on the Plans shall be finished as follows: The top of the slab shall be screeded to grade and cross section; lightly tamped as required to bring up a good bed of mortar for finishing and re-screeded as necessary. The surface shall then be finished with a wood float and leveling darby. No further finish will be required on top slabs of structures or conduits which are to be buried. In the case of all exposed top slabs of structures and conduits, they shall be given a final wood float and a light broomed, slip resistant finish to a uniform surface which conforms with accuracy to required shape, slope and grade. Slabs shall be edged as appropriate.

E. All interior floor slabs shall be "slip resistant finish", unless called out otherwise, as follows: The top surface shall be steel trowelled as noted in Paragraph B above and have a final finish applied by brushing lightly with a soft bristle brush to form a slightly roughed surface.

F. The floor surfaces of basins in which raking mechanisms are to be installed shall be finished, as indicated on the Plans, by sweeping in cement grout with the mechanism. The cement grout to be used shall be composed of one part Portland cement and two parts sand by weight.

G. The sweeping-in process shall be performed in the presence of the Engineer or the Engineer’s Representative or, if necessary, under the supervision of a factory representative of the equipment manufacturer.

H. The slab upon which the grout is to be applied shall be finished in accordance with the provisions of Paragraph D above except that after leveling and floating, it shall be raked in such a manner as to provide a good bond for the grout. Before grout is deposited on the slab, it shall be thoroughly cleaned, wet down with clean water, and lightly dusted with neat cement immediately prior to placement of the grout.

I. Concrete Hardener shall be applied to the floors where scheduled to be exposed concrete. Concrete surfaces to be treated must be thoroughly set and dry, clean and free of dust. Three applications of "lapidolith", "saniseal", "hornolith", "vitrox", or Engineer approved equal liquid are required, using one gallon per 100 square feet for the complete treatment. Apply hardener strictly according to the manufacturer's printed instructions. Any substitution for the specified hardeners must be of the magnesium fluosilicate or zinc fluosilicate types.

3.12 FINISH OTHER THAN FLOORS

A. All top surfaces, other than slabs, not covered by forms, and which are not to be covered by additional concrete or fill shall receive a wood float finish without additional mortar. Care shall be taken that no excess water is present when the finish is made. Other surfaces shall be brought to finished elevations and left true and regular. All exposed interior concrete shall be grouted smooth and give a cement wash of one part light colored Portland cement and two parts fine aggregate mixed with water to consistency of thick paint. Grout shall be cork or wood floated to fill all pits, air bubbles, and surface holes.

B. Excess grout shall be scraped off with a trowel and rubbed with burlap to remove any visible grout film. Surface shall be kept damp during setting period. The finish for any area shall be completed in same day and the limits of a finished area shall be made at natural breaks in finished surface.

C. Rubbed Finish: Unless otherwise indicated, all faces (except top surfaces of slabs) exposed to view, such as walls, grade beams, columns, beams, canopy soffits and fascias, etc. shall be finished as follows:
1. Forms shall be removed and all fins removed, off-sets leveled, damaged places and depressions resulting from the removal of metal ties or other causes shall be carefully pointed with a mortar of sand and cement in the proportion which has been employed for the particular class of concrete treated.
2. The surface film of all such pointed places shall be carefully removed before setting occurs.
3. After the point has set sufficiently to permit it, all exposed surfaces shall be dampened and rubbed with a No. 16 carborundum stone, to a smooth even plane. Final rubbing shall be done with a No. 30 carborundum stone, or an abrasive of equal quality, to obtain an entire surface of a smooth texture and uniformity in color.
4. Mortar or grout worked up during rubbing shall be promptly removed by sacking with burlap or other suitable means so that no visible grout film or paste will remain. A cement wash or plaster coat shall not be used.
5. All surfaces shall be finished uniformly smooth and washed clean. The rubbed finish for any area shall be completed in the same day and the limits of a finished area shall be made at natural breaks in the finished surface.
6. If the Contractor does not provide suitable surface finish using carborundum stones specified above the Engineer, without additional cost to the Owner, may require to use of a power operated grinding machine to produce the desired finish.

3.13 CURING

A. Unformed concrete surfaces shall be water cured to prevent check of the fresh concrete surface. Where drying conditions are severe, as determined by the Engineer, fog sprays

shall be employed to prevent checking of the fresh concrete surface. Fog spraying shall be continued as specified until the finished surface has attained sufficient strength to permit flooding or covering with burlap mats. Where drying conditions are not severe, as determined by the Engineer, unformed concrete surfaces shall be covered with wet burlap mats as soon as the concrete has sufficiently set, and shall thereafter be kept under wet burlap. Comply with ACI 308.1.

B. Formed surfaces, both interior and exterior, shall be water cured by water sprays or under burlap mats beginning as soon as the forms are stripped. Prior to stripping of forms, the concrete and forms shall be kept moist by the water sprays. Comply with ACI 308.1.

C. Unless otherwise specified, surfaces shall be water cured for seven days after the concrete is placed.

D. After 48 hours of water cure, and with the acceptance of the Engineer, the curing of concrete surfaces may be completed by the curing compound method. Curing compounds shall be applied in strict conformance with the manufacturer's instructions. If the compound is applied to a surface which is later to be painted, the Contractor shall thoroughly sandblast the surface to remove all vestiges of the compound prior to concrete finishing. Curing compound shall not be used on any surfaces against which additional concrete or other finishing materials are to be bonded.

E. In all concrete structures, concrete made with normal Portland cement shall be prevented from drying for at least the first seven days after placing. Whenever the temperature of the surrounding air is between 40ºF and 60ºF, adequate provision shall be made for maintaining the temperature of concrete above 60ºF or the moist curing period shall be extended to ensure a compressive strength corresponding to that which would be secured under provisions of the previous part of this paragraph.

F. Whenever the temperature of surrounding air is below 40ºF, all concrete shall be maintained at a temperature of not less than 50ºF for at least 72 hours for normal concrete or for as much more time as is necessary to insure proper rate of curing of the concrete. The housing, covering or other protection used in connection with curing shall remain in place and intact at least 24 hours after the artificial heating is discontinued. No salt or other chlorides shall be used for prevention of freezing.

G. Protection from the Sun: All concrete shall be adequately protected from injurious action of sun in a manner satisfactory to the Engineer.

H. Temperature Control: During and at the conclusion of the specified curing period, means shall be provided to ensure that the temperature of the air immediately adjacent to the concrete does not fall more than 3ºF in any one hour nor more than 30ºF in any 24 hours.

3.14 CONCRETING IN COLD WEATHER

A. When the atmospheric temperature may be expected to drop below 40ºF at the time concrete is delivered to the work site, during placement, or at any time during the curing period, the following provisions also shall apply:
   1. Prevent damage to concrete due to early age freezing and limit rapid changes in temperature at early ages consistent with the requirements of ACI 306R, ACI 306.1 and the requirements in this Section.

2. If the air temperature is at or below 40 degrees F, cold weather concreting shall be performed in accordance with ACI 306R and ACI 306.1. This includes cases where the temperature drops below 40 degrees F after concrete operations have been started. The temperature shall be taken in shade away from artificial heat.
3. When air temperatures are at or below 40 degrees F, heated mixing water or a combination of heated mixing water and heated aggregates shall be used, if required, to raise the concrete temperature at placement to the minimum values (or greater) listed in ACI 306R – Chapter 5. The temperature of the heated water or aggregates shall not exceed 150 degrees F when entering the mixer.
4. Concrete placement is not permitted when the air temperature is at or below 35 degrees F. The temperature shall be taken in shade away from artificial heat.
5. Do not place concrete against a frozen subgrade or formwork that is at or below 35 F.
6. Salts, chlorides, chemicals or other foreign materials shall not be mixed with the concrete to prevent freezing or act as an accelerator.
7. When temperatures at or below 35 F may be expected during the curing period, the concrete shall be maintained at a temperature of at least 50 degrees F for five days or 70 degrees F for three days after placement. Rapid cooling or heating of concrete shall not be permitted.

B. Hot Weather Concreting.
1. Hot weather concreting shall comply with ACI 305R and ACI 305.1. At air temperatures of 90 degrees F or above, concrete placement shall be in accordance with Hot Weather Concreting requirements in ACI 305R, ACI 305.1 and requirements in this Section.
2. The temperature of the concrete when placed in the work shall not exceed 90 degrees F. Use chilled water or ice or other approved methods to reduce the temperature of the concrete as required.
3. Concrete shall be placed in the forms without the addition of any more water than is required by design. No excess water may be added to the concrete surface to aid in finishing. Control of the initial set and extending the time for finishing may be accomplished through the use of admixtures in accordance with these Specifications.
4. Plastic shrinkage cracking, due to rapid evaporation of moisture, shall be prevented. Concrete shall not be placed when the evaporation rate (actual or anticipated) equals or exceeds 0.2 pound per square foot per hour, as determined by Figure 4.2 in ACI 305R.

3.15 CONCRETING IN HOT WEATHER

A. When climatic or other conditions are such that the temperature of the concrete may reasonably be expected to exceed 90ºF at the time of delivery at the work site, during placement, or during the first 24 hours after placement, the following provisions also shall apply:
1. The Contractor shall maintain the temperature of the concrete below 90ºF during mixing, conveying, and placing. Methods used shall conform to "Recommended Practice for Hot Weather Concreting," ACI Standard 305.
2. The concrete shall be placed in the work immediately after mixing. Truck mixing shall be delayed until only time enough remains to accomplish it before the concrete is placed.

3. Exposed concrete surfaces, which tend to dry or set too rapidly, shall be continuously moistened by means of fog sprays or otherwise protected from drying during the time between placement and finishing, and after finishing.
4. Finishing of slabs and other exposed surfaces shall be started as soon as the condition of the concrete allows and shall be completed without delay.
5. Concrete surfaces exposed to the air shall be covered as soon as the concrete has hardened sufficiently and shall be kept continuously wet for at least the first 48 hours of the curing period, and for the entire curing period unless curing compound is applied as specified.
6. Formed surfaces shall be kept completely and continuously wet for the duration of curing period (prior to, during, and after form removal) or until curing compound is applied as specified.

3.16 EMBEDDED ITEMS, JOINTS & WATERSTOP

A. See Section 03_15_20 Concrete Joint & Embedded Items

3.17 DRY PACK MORTAR

A. Where surfaces are required to be built up with mortar, such surfaces shall be thoroughly roughened by brushing, completely cleaned, and coated with appropriate bonding compound before the application of the required mortar. The mortar shall be applied immediately following the application of the bonding compound in bands or strips to form a compact durable covering of the required thickness and shall be free from lumps and depression. Construction joints in the mortar shall be sloped to thin edges and, before application is resumed, the joint shall be thoroughly cleaned. Dry pack mortar shall be used for built-up surfaces, setting miscellaneous metal items, and correcting minor repairs and imperfections.

B. No mortar shall be applied during freezing weather unless adequate protection is provided.

C. The mortar shall be cured as specified for concrete.

3.18 MODIFICATION OF EXISTING CONCRETE

A. Where the work indicated on the Plans requires modification of existing concrete structures or concrete poured over six months previously to be removed or modified, the existing concrete shall be cut accurately to the lines required in the presence of the Engineer or the Engineer's Representative. Concrete faces exposed to view shall be cut with a concrete saw. The cutting shall be accomplished in a manner that preserves, free from cracks or other injuries, those parts of the existing structure that are to remain. Where the cut surface is to be left exposed, it shall be cleaned and faced with non-shrink grout and finished to match adjacent surface. Where new concrete or mortar is to be placed against existing concrete surfaces or surfaces that have been cut, such surfaces shall be thoroughly cleaned by sandblasting, and coated with bonding compound just prior to the placement of the new concrete. Bonding compounds shall be as specified herein. Depth of saw cut should be ¾" minimum. Unless otherwise indicated on the Plans or specified, continuity of reinforcing steel shall be obtained by either exposing bars to provide sufficient laps with new bars or by welding existing bars with new bars as specified. Where indicated, existing bars shall be exposed and fully developed by; embedding in new concrete.

3.19 PROTECTION OF CONCRETE

A. All surfaces shall be protected against injury. During the first 72 hours after placing the concrete, any wheeling, working or walking on the concrete shall not be permitted. All slabs subject to wear shall be covered with a layer of sand or other suitable material as soon as the concrete has set. Sisalcraft paper or other similar tough waterproof paper may also be used, provided all joints between adjacent strips of paper are carefully sealed. This does not alter the requirements for proper curing as specified herein.

B. No concrete slabs or top surfaces or walls shall be placed during rain unless acceptable protective shelter is provided, and during such weather, all concrete placed within the preceding 12 hours shall be protected with waterproof canvas or other suitable coverings. These shall be provided and kept ready at hand.

3.20 SURFACE REPAIRS

A. Patching Defective Areas:
   1. Repair and patch defective areas with cement mortar immediately after removal of forms. Use epoxy-based mortar for structural repairs.
   2. Before patching is performed, the Engineer shall be notified and provided sufficient time to observe extent of repairs required.
   3. Cut out honeycomb and rock pockets, down to solid concrete but, in no case, to a depth of less than 1". Where defective concrete extends to the depth of reinforcing steel or where reinforcing steel is exposed during concrete chipping, concrete shall be removed to a minimum depth of 3/4 inch clear beyond depth of reinforcing steel. Saw-cut perimeter or area to be patched to provide edges cut perpendicular to the concrete surface.
   4. For exposed-to-view surfaces, blend white Portland cement and standard Portland cement so that, when dry, the patching mortar will match the color of the surrounding concrete. Provide test areas at inconspicuous location to verify mixture and color match before proceeding with the patching. Compact mortar in place and strike off slightly higher than the surrounding surface.
   5. Fill holes extending through concrete by means of a plunger-type gun or other suitable device from the least exposed face, using a flush stop held at the exposed face to ensure complete filling.

B. Repair of Formed Surfaces:
   1. Repair exposed-to-view formed concrete surfaces, where possible, that contain defects which adversely affect the appearance of the finish. Remove and replace the concrete having defective surfaces if the defects cannot be repaired to the satisfaction of the Engineer. Surface defects, as such, include color and texture irregularities, crack, spalls, air bubbles, honeycomb, rock pockets, and holes left by the rods and bolts; fins and other projections on the surface; and stain and other discolorations that cannot be removed by cleaning.
   2. Repair concealed formed' concrete surfaces, where possible, that contain defects that adversely affect the durability of the concrete. If defects cannot be repaired, remove and replace the concrete having defective surfaces. Surface defects, as such, include cracks in excess of 0.01" wide, cracks of any width through nonreinforced sections, honeycomb, rock pockets, holes left by tie rods and bolts, and spalls except minor breakage at corner.

C. Repair of Uniformed Surfaces:

1. Test unformed surfaces, such as monolithic slabs, for smoothness and to verify surface plane to the tolerances specified for each surface and finish. Correct low and high areas as herein specified.
2. Test unformed surfaces sloped to drain for trueness of slop, in addition to smoothness, using a template having the required slope. Correct high and low areas as herein specified.
3. Repair finished unformed surfaces that contain defects which adversely affect the durability of the concrete. Surface defects, as such, include crazing, cracks in excess of 0.01" wide or which penetrate to the reinforcement or completely through nonreinforced sections regardless of width, spalling, popouts, honeycomb, rock pockets, and other objectionable conditions.
4. Correct high areas in unformed surfaces by grinding, after the concrete has cured sufficiently so that repairs can be made without damage to adjacent areas.
5. Correct low areas in unformed surfaces during or immediately after completion of surface finishing operations by cutting out the low areas and replacing with fresh concrete. Finish repaired areas to blend into adjacent concrete.
6. Repair defective areas, except random cracks and single holes not exceeding 1" diameter, by cutting out and replacing with fresh concrete. Remove defective areas to sound concrete with clean, square cuts and expose reinforcing steel with at least 3/4" clearance all around. Dampen all concrete surfaces in contact with patching concrete and brush with a neat cement grout coating, or use concrete bonding. agent. Place patching concrete before grout takes its initial set. Mix patching concrete of the same materials to provide concrete of the same type or class as the original adjacent concrete. Place, compact, and finish as required to blend with adjacent finished concrete. Cure in the same manner as adjacent concrete.
7. Repair isolated random cracks and single holes not over 1" in diameter by the dry-pack method. Groove the top of cracks, and cut out holes to sound concrete and clean of dust, dirt, and loose particles. Dampen all cleaned concrete surfaces and brush with a neat.cement grout coating. Place dry-pack before the cement grout takes its initial set. Mix dry-pack consisting of one part Portland cement to 2-1/2 parts fine aggregate passing a No. 16 mesh sieve, using only enough water as required for handling and placing. Compact dry-pack mixture in place and finish to match adjacent concrete. Keep patched areas continuously moist for not less than 72 hours.

END OF SECTION

THIS PAGE INTENTIONALLY LEFT BLANK FOR DOUBLE SIDED PRINTING

SECTION 33_01_33

WASTEWATER LIQUID & SOLIDS REMOVAL & DISPOSAL

PART 1 GENERAL

1.1 SUMMARY

A. Removal and disposal of wastewater liquids and solids from the wastewater treatment facilities.

B. Waste sludge handling & disposal to be removed from the following locations:
   1. Southside Drying Beds prior to beginning initial demolition for Southside Improvements (to be included in bid item for "Demolition (Initial)")
   2. Northside Drying Beds prior to beginning initial demolition for Southside Improvements (to be included in bid item for "Demolition (Initial)")
   3. Southside Stormwater Pond prior to beginning stormwater pond improvements (to be included in the price bid for "Secondary FEB Concrete Lining & Sludge Disposal")
   4. Northside existing treatment units prior to beginning final demolition (to be paid from bid item "Waste Sludge Handling & Disposal from Existing Treatment Units Prior to Final Demolition (Northisde & Southside).")
   5. Southside existing treatment units prior to beginning demolition (to be paid from bid item "Waste Sludge Handling & Disposal from Existing Treatment Units Prior to Final Demolition (Northisde & Southside).")

C. Quantity and character of sludge will vary from location to location and bid price should per for waste sludge handling should be an average price for overall quantity.

D. It is the contractor's responsibility to verify the total amounts in each basin prior to bid.

E. No adjustment in price or unit price will be made based on actual quantities.

1.2 RELATED SECTIONS

A. Section 01_00_01 Basic Requirements

B. Section 02_41_00 Demolition

C. The Contract Documents are a complete unit and complementary to each other. The individual Specification sections and other Contract Documents do not contain all cross references to "related work" or "related sections." It is the Contractor's responsibility to review the complete Contract Documents in order to properly scope, schedule and coordinate the work of any/all subcontractors, suppliers, and others on this project. Anything called out in one location of the Contract Documents is binding as if it were called out in all sections of the Contract Documents.

1.3 SUBMITTALS

A. Submittals for products and miscellaneous items in this specification section shall be submitted in accordance with Section 01_33_01 General Submittal Requirements and related submittal sections and provisions of the Contract Documents.

1.4 DEFINITIONS

A. Process Sludge: This material is the liquid volume of existing tankage and mixture of process water, mixed liquor, organic settled solids and sludge that will be transferred by the Contractor to another treatment basin as approved by the Owner. **The transfer of process sludge will be required prior to complete construction activities (demolition and rehabilitation of Southside stormwater pond.)**

B. Waste Sludge: This material includes an undetermined volume and mixture of grit, inorganic settled solids and sludge that will be removed and disposed by the Contractor. **The disposal of waste sludge will be required to complete construction activities (demolition and rehabilitation of Southside stormwater pond.)**

C. Sludge Management Plan (SMP): A plan for removing, processing, treating, storing, transporting, and disposing of mixed liquor, settled solids, partially digested sludge, and sludge in addition to soils intermixed with the various types of sludge.

D. Sludge Disposal / Disposition Plan (SDP): A plan for sludge removed from the treatment facility and disposed of in a landfill.

E. Added Water: This water is added by the Contractor to aide in the removal of, cleaning of, and transport of the existing solids to be removed from the wastewater facilities and disposed of off-site. The added water is the sole responsibility of the Contractor. The volume of added water is not included in the specified volumes of the bid quantities of material to be removed from the wastewater facilities. The Contractor is responsible for all effort and costs required to provide, use, transport, and dispose of added water used in the tasks associated with liquid and solids removal. The Contractor shall include all costs for added water in the base bid quantity prices and the Bid Form Unit Prices for Sludge Removal. The Contractor's use of added water shall not be grounds for a scope change nor a contract change.

F. Sludge Removal: Construction activities to remove mixed liquor, settled solids, partially digested sludge, and sludge from any wastewater treatment facility in an effort to gain access for subsequent construction activities and/or cleaning of a facility to facilitate inspection, repair, demolition, and/or other construction activities as required by the Contract Documents.

G. Treatment Basin: Structures, both existing and new, whose primary function is to hold, treat and/or process wastewater, wastewater solids, and sludge.

H. Project Locations: Facilities from which sludge is to be removed.

1.5 SCHEDULING & SEQUENCING

A. Conduct sludge removal only after schedule has been approved by the Owner and the Contractor has submitted SMP or SDP and received written approval of same from ODEQ Contractor, with Owner's approval, may make use of existing SMP/SDP in place. Coordinate with Owner prior to bid. Sludge removal schedule and sequencing must allow for continued operation of the facilities. If land application is used for disposal, apply sludge only after adequate erosion and sediment controls are in place.

1.6 MEASUREMENT & PAYMENT

A. Process Sludge Handling:
   1. Measurement: Will not be measured. It is considered to the be the full volume of any tankage that is required to be drained to execute construction activities
   2. Payment is subsidiary to Demolition. Payment shall be full compensation for the following: equipment, labor, any added water, gas/fuel, sludge and soil testing, spill clean-up, and temporary pumping and piping. Contractor is responsible for all efforts and costs associated with procuring, transport, and final disposal of any added water.

B. Waste Sludge Handling and Disposal for Initial Demolition:
   1. Will not be measured for payment and shall be included in the price bid for demolition.

C. Waste Sludge Handling and Disposal for Final Demolition:
   1. Measurement: The units scheduled for demolition or rehabilitation will be drained of Process Sludge to the minimum level practical. Prior to removal of any Waste Sludge, the Owner, Engineer, and Contractor will agree on that the remaining sludge is of a nature that cannot be processed by the treatment plant. Upon agreement the sludge depth will be measured at each corner and at least one point in the center of the basin. The depth measurements along with the basin plan view area will used to calculate cubic yards of Waste Sludge to be disposed of. No payment will be made for Added Water.
   2. Payment: Payment for sludge disposal will be by the cubic yard of sludge disposed at the Bid Price listed in the Bid Proposal. The Bid Item will be full compensation for removal of waste sludge, dewatering, hauling, landfill tipping fees, permitting, tools, labor and any other incidentals required to complete the work.

PART 2 PRODUCTS (NOT USED)

PART 3 EXECUTION

3.1 GENERAL

A. The Contractor with coordination from the Owner will be responsible for transferring Process Sludge from one basin to another.

B. Contractor is responsible for removal, handling and disposal of all Waste Sludge, including the material resulting from the tanks' cleaning.

C. Remove Waste Sludge from the existing basins within the limits shown or specified and dispose of the Waste Sludge in accordance with a ODEQ approved SMP or SDP. The Contractor shall also be responsible for removing and handling any waste sludge from the new basins in accordance with an ODEQ approved SMP or SDP as required for his construction activities within these new basins.

D. Contractor is responsible for all expenses related to Process Sludge removal and transfer, which shall be covered under the base bid.

E. Contractor is responsible for maintaining and protecting all roads, drives, dikes, equipment, structures, etc during sludge removal, processing, land application, hauling, and disposal and shall repair any damaged as a result of their work.

F. The Contractor will be required to keep a Daily Record and a Project Record, of the volume of liquid biosolids land-applied each day. The Daily Record will need to be provided to the Project Manager, or his designee, at the end of each workday. The Project Record will need to be provided to the Owner, or designee, at the end of the project.

G. The Contractor will communicate daily with the Engineer to determine which land application site will be used. This discussion is also designed to ensure that the Contractor does not over apply biosolids to any approved application site.

H. The Contractor will be responsible for biosolids sampling, sample preservation, sample delivery, and storage in accordance with methods developed by the City of Shawnee Wastewater Treatment Plant Laboratory Staff or standard practice is no methods have been developed.

I. The Contractor is required to maintain a cooperative and courteous relationship with the landowner while delivering and land-applying sludge, grit, and biosolids. Care shall be taken to leave the fields and roadway in reasonable condition upon project completion.

3.2 PROJECT LOCATION

A. As follows, but not to extend beyond Project limits.
   1. Northside
      a. All existing units
      b. All piping that requires wastewater and sludge removal
      c. All other treatment plant facilities that require dewatering and cleaning to perform the work.
   2. Southside
      a. All existing units
      b. Existing stormwater pond
      c. All piping that requires wastewater and sludge removal
      d. All other treatment plant facilities that require dewatering and cleaning to perform the work.

3.3 TREATMENT BASIN CLEANING

A. Transfer Process Sludge to another basin designated by the Owner and take measurements of Waste Sludge In-Situ prior to commencing cleaning activities.

B. Remove sludge from the Treatment Basins within limits or as specified or directed.

3.4 EQUIPMENT

A. Provide necessary equipment for Process Sludge transfer from on basin to another Owner designated basin.

B. Provide necessary equipment for Waste Sludge removal, transport from the facility to the disposallocation, and final application or disposal.

C. Provide necessary equipment for added water, procurement, transport from the facility to thedisposal location, and final application or disposal.

3.5 DISPOSAL PERMITTING

A. Contractor will be responsible for registration, authorization, and/or permitting of the land application with the appropriate regulatory agencies and shall pay the related regulatory fees.

B. Contractor will maintain all chain of custody forms and provide documentation of all sludgevolumes land applied and the application sites.

3.6 TESTING

A. Contractor will be responsible for obtaining all sludge and soil samples and their required labanalyses for permitting.

B. Contractor will pay for the lab analysis and will include such lab analysis expenses with as part ofthe Work.

3.7 DISPOSAL

A. Apply the sludge and/or added water for beneficial use as fertilizer/soil amendment or dispose ofthe material using a disposal method approved by the appropriate permitting agency.

B. When sludge application is via the subsoil injection method, such application shall be accordingto sound agronomic rates.

C. Contractor is responsible for determining application rates based on cover crops and analyticaltesting of the sludge.

D. Contractor may remove and separately dispose of oil/grease from the sludge prior to land application.

E. Contractor is responsible for providing commercially reasonable handling of sludge once it hasbeen collected, including cleanup of any spills.

F. Contractor is responsible for meeting the dewatering requirements of landfill disposal.

3.8 RECORD KEEPING

A. Maintain records of sludge application and submit records to Engineer, Owner, and regulatingagencies, as required by this specification and any related permits.

3.9 BIDDING QUANTITIES

A. Process Sludge Removal
   1. Will not be measured for payment and will be included in the price bid for demolition.

B. Waste Sludge (initial demolition)
   1. Will not be measure for payment and will be included in the price bid for demolition.

C. Waste Sludge Removal (final demolition)
   1. Contractor is responsible to remove and dispose of the waste sludge volumes listed in the bid proposal from the designated structures to be demolished.
   2. The volume listed is for reference only, payment will be based on the total quantity of Waste Sludge removed from all facilities. No additional payment will be made if quantities removed exceed the estimated quantity listed for any individual facility unless the total quantity is exceeded (both facilities.) If the total quantity removed meets the total estimated, sludge removal will stop until the Owner and Contractor agree to contract modification to handle the remaining Waste Sludge.

END OF SECTION

THIS PAGE INTENTIONALLY LEFT BLANK FOR DOUBLE SIDED PRINTING

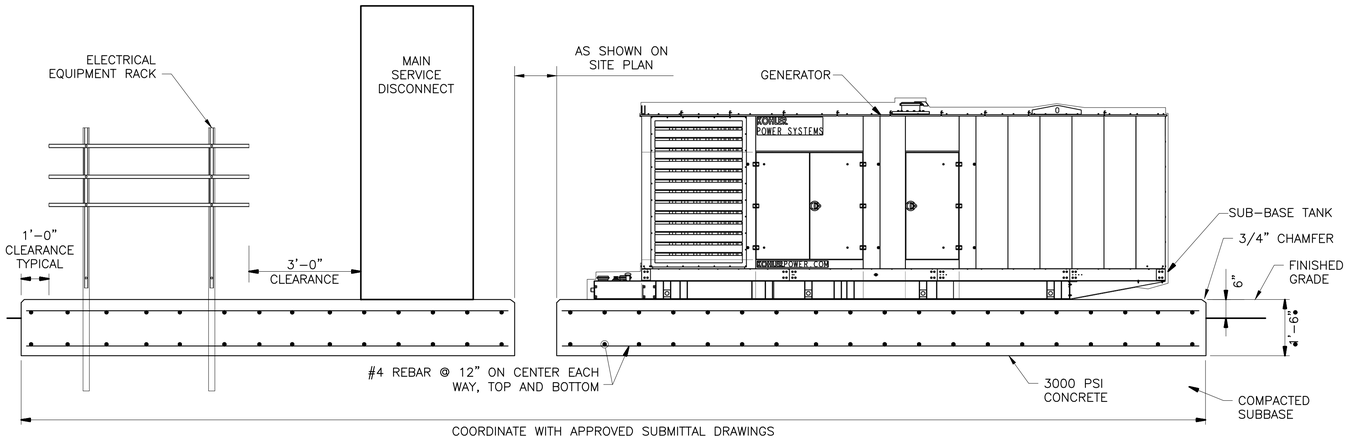

1 — **POWER SYSTEM PAD – ELEVATION**
SCALE: NONE

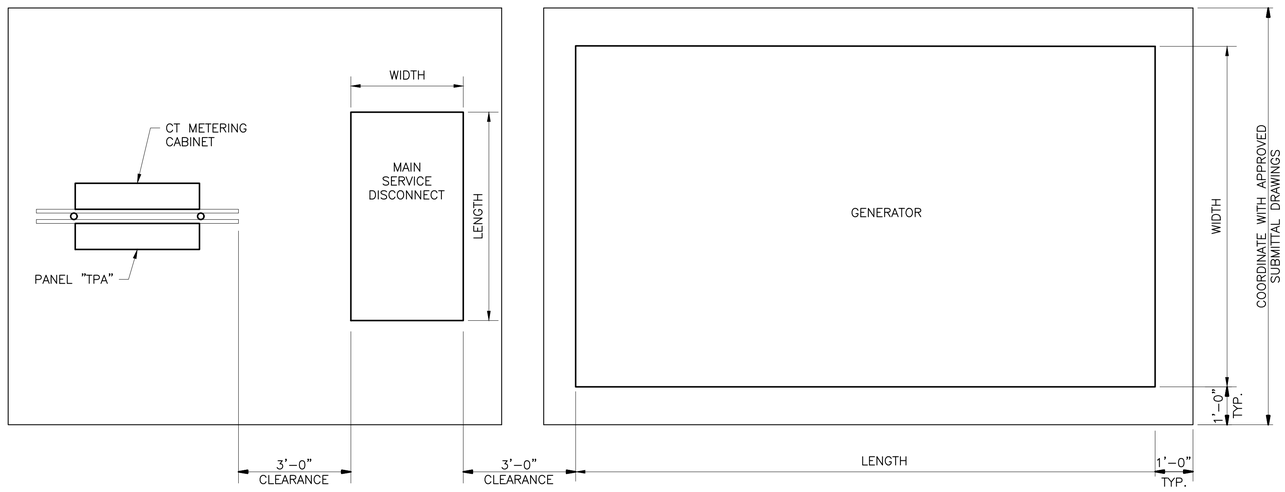

2 — **POWER SYSTEM PAD – PLAN**
SCALE: NONE

NOTES:

1. APPROXIMATE DIMENSIONS SHOWN. COORDINATE ACTUAL DIMENSIONS WITH APPROVED SUBMITTAL DRAWINGS.

WALL ENGINEERING
PO BOX 1457, DURANT, OK 74702
OKLAHOMA CA #5413 EXP. JUNE 30, 2023

SUBMITTAL / REVISIONS:

DATE	BY	SUBMITTAL / REVISION

SHAWNEE MUNICIPAL AUTHORITY
WASTEWATER SYSTEM IMPROVEMENTS
SHAWNEE, OKLAHOMA

ELECTRICAL DETAILS I

PROJECT NO. SHN–20–01
DATE 06/22
DRAWN BY: CD
CHECKED BY: BB
REVIEWED BY: BB
SCALE: AS SHOWN

BAR IS ONE INCH ON ORIGINAL DRAWING
0' 1'
IF NOT ONE INCH ON THIS SHEET, ADJUST SCALES ACCORDINGLY

SHEET
EN7

REGISTERED PROFESSIONAL ENGINEER
BRUCE W. BROWN
20995
OKLAHOMA
06-01-2022

BROWN ENGINEERS
501-448-0100

P:\PRODUCTION\PROJECTS\WALL ENGINEERING (WE)\WE-055 SHAWNEE NORTHSIDE WASTEWATER TREATMENT PLANT\DWG\EN7.DWG
6/27/2022 2:45 PM

GENERAL

1. ALL NOTES LISTED ON THIS SHEET APPLY TO ALL SHEETS OF THE DRAWINGS AS IF THEY WERE WRITTEN ON EACH SHEET.
2. NOTIFY OWNER 48 HOURS PRIOR TO CONSTRUCTION.
3. VERIFY ALL EXISTING CONDITIONS AND OBSTRUCTIONS INCLUDING LOCATION AND DIMENSIONS BEFORE STARTING WORK AND SHALL NOTIFY THE ENGINEER OF ANY DISCREPANCIES.
4. PRIOR TO INSTALLATION OF RELEVANT FACILITIES CONTRACTOR SHALL, AT HIS OWN EXPENSE, UNCOVER AND OTHERWISE DETERMINE THE DEPTH OF UTILITIES WHICH, IN HIS OPINION, COULD INTERFERE WITH CONSTRUCTION.
5. ALL DIMENSIONS SHALL BE CONFIRMED BY THE CONTRACTOR ACCORDING TO ACTUAL FIELD CONDITIONS OR EQUIPMENT/STRUCTURE REQUIREMENTS.
6. ALL MISCELLANEOUS REMOVAL ITEMS REQUIRED FOR CONSTRUCTION SHALL BE FIELD LOCATED BY THE CONTRACTOR PRIOR TO BIDDING. THESE ITEMS WILL NOT BE MEASURED FOR PAYMENT AND SHALL BE INCLUDED IN THE PRICE BID FOR ASSOCIATED ITEMS OF WORK.
7. TRAFFIC CONTROL DEVICES SHALL BE FURNISHED AND MAINTAINED BY THE CONTRACTOR THROUGHOUT THIS PROJECT IN ACCORDANCE WITH THE LATEST VERSION OF THE MANUAL OF UNIFORM TRAFFIC CONTROL DEVICES AND/OR AS REQUIRED BY THE DEPARTMENT OF TRANSPORTATION OR COUNTY PERMITS FOR CONSTRUCTION IN RIGHT-OF-WAY.
8. SUBMIT AN EROSION CONTROL PLAN (SWPPP) PRIOR TO CONSTRUCTION AND SHALL MAINTAIN SWPPP THROUGHOUT DURATION OF CONSTRUCTION IN ACCORDANCE WITH SPECIFICATIONS.
9. EXISTING FACILITY AND UTILITY INFORMATION SHOWN ON THE DRAWINGS WAS OBTAINED FROM AVAILABLE RECORDS, LOCATES, AND AVAILABLE FILES. NEITHER THE OWNER NOR THE ENGINEER ASSUMES ANY RESPONSIBILITY FOR FACILITIES AND UTILITIES NOT SHOWN OR NOT IN THE LOCATION SHOWN. THE CONTRACTOR SHALL FIELD VERIFY ALL LOCATIONS, SIZES, MATERIALS, TYPES, AND ELEVATIONS SHOWN AROUND OR NEAR AREAS OF CONSTRUCTION PRIOR TO THE START OF CONSTRUCTION.
10. PERFORM ALL WORK WITHIN DESIGNATED EASEMENTS. CONTRACTOR SHALL NOT ENCROACH OR TRESPASS INTO PRIVATE PROPERTY WITHOUT WRITTEN APPROVAL FROM THE PROPERTY OWNER.
11. MAINTAIN LOCAL AND THROUGH TRAFFIC FOR ALL STREETS AT ALL TIMES WITHOUT CLOSURES OR RESTRICTIONS EXCEPT AS PART OF THE TRAFFIC CONTROL PLAN.
12. MAINTAIN REASONABLE ACCESS TO ALL PROPERTIES AT ALL TIMES. DO NOT RESTRICT DRIVEWAY ACCESS WITHOUT OWNER'S APPROVAL. RESTORE DRIVEWAY ACCESS AT THE END OF EACH DAY. PROVIDE TEMPORARY MEASURES AS NEEDED (SUCH AS GRAVEL) TO MAINTAIN DRIVEWAY ACCESS.
13. KEEP ACCURATE RECORDS OF ALL CONSTRUCTION THAT DEVIATES FROM THE DRAWINGS. THE CONTRACTOR SHALL FURNISH TO THE ENGINEER ACCURATE "AS-BUILT" RED LINE DRAWINGS FOLLOWING COMPLETION OF CONSTRUCTION.
14. TAKE SPECIAL PRECAUTIONS IN VICINITY OF ANY OVERHEAD AND UNDERGROUND ELECTRIC LINES. CONTRACTOR SHALL ABIDE BY THE MOST RECENT NATIONAL ELECTRIC CODE FOR WORKING AROUND OVERHEAD ELECTRIC LINES AS WELL AS OTHER LOCAL, STATE OR FEDERALS LAWS / REQUIREMENTS.
15. CONFORM TO ALL APPLICABLE FEDERAL, STATE AND LOCAL LAWS GOVERNING EXCAVATION. TRENCH SIDE SLOPES SHALL MEET OSHA REQUIREMENTS THAT ARE IN EFFECT AT THE TIME OF CONSTRUCTION. CONTRACTOR SHALL SUBMIT A TRENCH SAFETY PLAN PRIOR TO CONSTRUCTION.
16. THIS PROJECT IS SUBJECT TO AMERICAN IRON AND STEEL (AIS) REQUIREMENTS. ALL IRON AND STEEL PRODUCTS FOR CONSTRUCTION, ALTERATION, MAINTENANCE, OR REPAIRS INCORPORATED MUST BE PRODUCED IN THE UNITED STATES.
17. PROVIDE DUST CONTROL AT ALL TIMES DURING CONSTRUCTION.
18. ANY WORK PERFORMED WITHOUT THE KNOWLEDGE OF THE ENGINEER, INSPECTOR OR OWNER'S REPRESENTATIVE IS SUBJECT TO REMOVAL AND REPLACEMENT AT THE CONTRACTOR'S EXPENSE.

EARTHWORK

1. ALL COMPACTED SUBGRADE AND BASE NOT ACCESSIBLE TO MECHANICAL COMPACTION EQUIPMENT SHALL BE HAND COMPACTED USING WHACKER PACKERS.
2. SUBGRADE PREPARATION FOR ALL STRUCTURES AND BUILDINGS ON DRAWINGS SHALL BE AS FOLLOWS: OVER-EXCAVATE 30 INCHES BELOW BASE OF CONCRETE, SCARIFY AND COMPACT TOP 12", COMPACT TO 95% STANDARD PROCTOR DENSITY, INSTALL NON-WOVEN NEEDLE PUNCHED GEOTEXTILE FABRIC, INSTALL 30 INCHES OF CRUSHER RUN AGGREGATE BASE IN 10" LIFTS, COMPACT TO 95% MODIFIED PROCTOR DENSITY. BASE OF CONCRETE SHALL BE CONSIDERED THE BOTTOM OF SLAB AND NOT THE BASE OF FOOTINGS/STEM WALLS. OVER EXCAVATION MAY BE DELETED WHERE ROCK IS PRESENT. #57 ROCK SHALL BE SUBSTITUTED FOR AGG BASE WHERE GROUNDWATER IS PRESENT. ALL FILL MATERIAL REQUIRED TO ACHIEVE FINAL GRADE BELOW THE 30" ROCK LAYER SHALL BE CONSTRUCTED WITH ONSITE OR IMPORTED FILL MATERIAL COMPACTED TO 95% STANDARD PROCTOR DENSITY.
3. ELEVATIONS GIVEN ARE FINISHED GRADE UNLESS OTHERWISE NOTED.
4. NO FIRES WILL BE ALLOWED UNLESS OTHERWISE NOTED. TREES AND BRUSH SHALL BE REMOVED AND DISPOSED OF OFF SITE.
5. NO BLASTING WILL BE ALLOWED.
6. ALL SURFACE DRAINAGE IMPACTED SHALL BE RESTORED TO AS GOOD OR BETTER CONDITION.
7. ALL DISTURBED AREAS SHALL BE LEFT FREE OF RUTS AND TRACKS AND SHALL BE FULLY GRADED TO DRAIN.

GRASSING

1. ANY AND ALL DISTURBED AREAS OUTSIDE OF PLANT FENCING SHALL BE TOPSOILED, HYDROMULCHED, AND WATERED UNTIL ESTABLISHED. ANY AND ALL DISTURBED AREAS INSIDE PLANT FENCING SHALL BE SOLID SLAB SODDED PER SPECIFICATIONS & WATERED UNTIL ESTABLISHED.
2. FOR PIPELINE CONSTRUCTION EXTERNAL TO THE TREATMENT PLANT, ANY AND ALL DISTURBED AREAS SHALL BE TOPSOILED, HYDROMULCHED, AND FERTILIZED, WITH THE EXCEPTION OF RESIDENTIAL YARDS AND IMPROVED GRASS AREAS WHICH SHALL RECEIVE SOLID SLAB SOD IN LIEU OF HYDROMULCHING PER SPECIFICATIONS. THIS WORK WILL NOT BE MEASURED FOR PAYMENT. COST SHALL BE INCLUDED IN THE PRICE BID FOR ASSOCIATED ITEMS OF WORK.

DUCTILE IRON PIPE & FITTINGS

1. ALL BURIED DUCTILE IRON PIPE AND FITTINGS SHALL BE PROTECTED IN ACCORDANCE WITH ANSI/AWWA C105/A21.5 "POLYETHYLENE ENCASEMENT FOR GRAY AND DUCTILE IRON PIPE FOR WATER AND OTHER LIQUIDS." THIS ITEM SHALL NOT BE MEASURED FOR PAYMENT AND SHALL BE INCLUDED IN THE PRICE BID FOR ASSOCIATED ITEMS OF WORK.
2. ALL AIR PIPING SHALL BE UNLINED WITH EPDM GASKETS RATED FOR COMPRESSED AIR USAGE (PRESSURE & TEMPERATURE.)
3. ALL DUCTILE IRON PIPING SHALL BE RESTRAINED JOINT.
4. ALL DUCTILE IRON PIPE CONNECTIONS TO P.V.C. SHALL BE MADE WITH A BOLTED CAST TRANSITION COUPLING.
5. ALL EXPOSED FITTINGS SHALL BE FLANGED FITTINGS W/ STAINLESS STEEL BOLTS AND APPURTENANCES.
6. ALL MECHANICAL JOINT, FLANGE & MISC. FITTINGS TO HAVE STAINLESS STEEL BOLTS, NUTS & WASHERS.
7. ALL BURIED FITTINGS SHALL BE D.I. MECHANICAL JOINT (M.J) RESTRAINED (MEGALUG.)
8. WALL PIPES SHALL BE USED WHEREVER PIPING PASSES FROM A STRUCTURE TO EARTHEN BACKFILL.
9. PROVIDE 1/4" ANTI-SEEPAGE RINGS A MINIMUM OF 2" WIDE WELDED TO ALL PIPES PIERCING WATER HOLDING TANKS TO PREVENT SEEPAGE OF WATER BETWEEN PIPE AND CONCRETE. WALL PIPES MAY BE USED IN LIEU OF WELDED RINGS.
10. ALL DUCTILE IRON PIPING LARGER THAN 10" DIAMETER SHALL HAVE CONCRETE SUPPORTS UNLESS OTHERWISE DETAILED. SMALLER PIPING MAY HAVE METAL STAND TYPE SUPPORTS.

CONCRETE

1. CONSTRUCTION JOINTS TO FACILITATE CONSTRUCTION SHALL BE LOCATED AND DETAILED ON THE SHOP DRAWINGS FOR REVIEW. UNLESS INDICATED OTHERWISE, ALL CONSTRUCTION JOINTS SHALL BE KEYED. HORIZONTAL CONSTRUCTION JOINTS SHALL NOT BE PERMITTED IN WALLS AND BEAMS, UNLESS SHOWN ON THE DRAWINGS OR APPROVED BY THE ENGINEER.
2. ALL EXPOSED CORNERS OF CONCRETE STRUCTURES REGARDLESS OF LOCATION SHALL HAVE A 3/4 INCH MINIMUM CHAMFER.
3. NOT USED.
4. ALL GROUTED AREAS OVER 8" THICK SHALL BE REINFORCED WITH WELDED WIRE MESH, 6x6-W12.0xW2.0 MATTS AT 5'-0" CTRS MAX.
5. ANCHOR BOLTS NOT SPECIFIED BY ENGINEER SHALL BE DESIGNED AND STAMPED BY A REGISTERED PROFESSIONAL ENGINEER, RETAINED BY THE CONTRACTOR IN ACCORDANCE WITH APPLICABLE PROJECT AND CODE REQUIREMENTS. SUBMIT AS A SHOP DRAWING FOR REVIEW AND APPROVAL BY THE ENGINEER. COORDINATE LOCATION, SIZE AND EMBEDMENT PRIOR TO CASTING CONCRETE.
6. EXPANSION JOINTS SHALL BE USED WHERE EXTERIOR OF ALL EXISTING AND PROPOSED STRUCTURES AND BUILDINGS ABUT CONCRETE PAVING WHETHER SHOWN ON THE DRAWINGS OR NOT.
7. NO FLY ASH SHALL BE PERMITTED IN CONCRETE MIX DESIGN.
8. TREMIES REQUIRED ON ALL POURS DEEPER THAN 10 FEET.
9. VAPOR BARRIER (10 MIL) REQUIRED BENEATH ALL SLABS.
10. WALKWAYS AND SIDEWALKS SHALL BE POURED WITH SLIGHT SLOPE AND NO LOW SPOTS SO THEY WILL DRAIN FREELY.
11. ALL STRUCTURAL JOINTS SHALL RECEIVE 6" RUBBER CENTER BULB PVC WATERSTOP PLACED AT ALL WATERTIGHT JOINTS.
12. VERTICAL WATERSTOP SHALL BE FULLY EMBEDDED IN SLAB POUR AND WELDED TO ALL ADJACENT WATERSTOP.
13. WHEN WATERSTOP IS PLACED HORIZONTALLY IN SLABS, THE CONTRACTOR SHALL TEMPORARILY TIE UP OR CLAMP UP THE WATERSTOP UNTIL THE CONCRETE IS PLACED TO SLIGHTLY ABOVE THE DEPTH OF THE WATERSTOP.
14. ALL CONCRETE SHALL HAVE XYPEX ADMIXTURE PER SECTION 03_30_00 AND MANUFACTURE'S SPECIFICATIONS.

BUILDING

1. ALL EXTERIOR DOORS ON ALL BUILDINGS SHALL HAVE R-PANEL AWNING SUPPLIED INTEGRAL WITH METAL BUILDING. AWNING ROOF PANELS SHALL MATCH MAIN BUILDING ROOF. AWNINGS SHALL INCLUDE FULL WIDTH GUTTER WITH DOWNSPOUTS.
2. ALL EXTERIOR EXPOSED CMU SHALL BE SPLIT FACE ARCHITECTURAL BLOCK UNLESS OTHERWISE NOTED.
3. ANY R-PANEL USED IN THE BUILDING CONSTRUCTION WHERE NO GAUGE IS SPECIFIED SHALL BE 24 GA. MINIMUM.

PIPING & APPURTENANCES

1. MANHOLES SHALL BE GROUTED INSIDE AND OUT AT ALL JOINTS.
2. ALL NON-POTABLE WATER LINES SHALL BE IN PURPLE COLORED PIPE AND LABELED "DO NOT DRINK". THE WARNING LABEL SHALL BE LOCATED ON OPPOSITE SIDES OF ALL PIPES AND REPEATED EVERY THREE (3) FEET OR LESS.
3. ALL PIPING THAT CROSS VERTICALLY SHALL HAVE AT LEAST 6" SEPARATION.
4. ALL UNDERGROUND FITTINGS SHALL BE DUCTILE IRON MECHANICAL JOINTS (MEGALUG), UNLESS OTHERWISE NOTED.
5. ALL VALVE ASSEMBLIES, VAULTS, PULLS BOXES AND MANHOLES CONSTRUCTED SHALL BE ADJUSTED TO BE FLUSH WITH FINISHED GRADE UNLESS OTHERWISE NOTED. MANHOLES SET IN OPEN FIELDS SHALL BE SET TWELVE INCHES ABOVE FINISHED GRADE AND VAULTS SHALL BE SET 6 INCHES ABOUT FINISHED GRADE.
6. NOT USED.
7. ANY BY-PASS PUMPING AND/OR BY-PASS PIPING INSTALLED SHALL BE OPERATED AND MAINTAINED BY THE CONTRACTOR AT CONTRACTOR'S EXPENSE. THE CONTRACTOR IS RESPONSIBLE FOR ANY UNAUTHORIZED DISCHARGES.
8. CONNECTIONS TO EXISTING UTILITIES SHALL BE MADE IN A TIME AND UNDER CONDITIONS WHICH WILL LEAST INTERFERE WITH SERVICE OF THE OWNER, AND AS AUTHORIZED BY THE ENGINEER AND OWNER. FACILITIES SHALL BE PROVIDED FOR PROPER DEWATERING AND FOR DISPOSAL OF ALL WATER/WASTEWATER REMOVED TO ADJACENT PROPERTY FROM DEWATERED LINES WITHOUT DAMAGE.
9. MAINTAIN THE REQUIRED 10 FOOT HORIZONTAL AND 2 FOOT VERTICAL SEPARATION BETWEEN SANITARY SEWER AND POTABLE WATER MAINS. ALL OTHER PIPING SHALL MAINTAIN A MINIMUM OF 5' SEPARATION.
10. ORDER MANHOLES IN PAVEMENT LOWER THAN PROPOSED GRADE AND BRING THEM TO EXACT GRADE WITH LEVEL RINGS.
11. PROVIDE FREEZE PROTECTION FOR ANY EXPOSED PIPING. FREEZE PROTECTION SHALL CONSIST OF WRAPPED PIPE W/ RIGID ALUMINUM COVERS UNLESS OTHERWISE SPECIFIED. FREEZE PROTECTION/INSULATION WILL NOT BE REQUIRED FOR PIPING INSIDE BUILDING, AIR PIPING OR SCADA INSTRUMENTATION CONDUIT.
12. CONTRACTOR SHALL SCHEDULE AND CONDUCT OPERATIONS TO LIMIT AMOUNT OF TRENCH OPENED TO INCLUDE ONLY THAT WHICH MAY BE COVERED IN 2 (TWO) DAYS TIME TO A MAXIMUM OF 200'. ANY TRENCH LEFT OPEN OVERNIGHT SHALL BE BARRICADED AND PROTECTED AS DETAILED IN THE MOST CURRENT EDITION OF THE MANUAL OF UNIFORM TRAFFIC CONTROL DEVICES.
13. SEWER MAINS SHALL BE CONSTRUCTED UTILIZING A LASER WITH GRADE ESTABLISHED THROUGH SEWER PIPE.
14. WHEN TIE-INS TO EXISTING MANHOLES ARE TO BE MADE, CONTRACTOR SHALL VERIFY MANHOLE FLOW LINE AT AN INTERVAL PRIOR TO MANHOLE TO ENSURE ADEQUATE DEPTH OF NEW LINE. WHEN CONSTRUCTING A MANHOLE OVER AN EXISTING LINE, CONTRACTOR SHALL VERIFY EXISTING LINE DEPTHS PRIOR TO MANHOLE CONSTRUCTION.
15. MATERIAL EXCAVATED FROM TRENCH & PIPE BEDDING MATERIALS SHALL NOT BE PLACED ON ADJACENT ASPHALT OR CONCRETE PAVING.
16. A SILT AND VARMINT CAP AND/OR PLUG SHALL BE IN PLACE ON THE OPEN END OF PIPES AT ALL TIMES.
17. DO NOT EXCEED 75% OF MANUFACTURE'S RECOMMENDED MAXIMUM DEFLECTION FOR PIPE JOINTS UNLESS OTHERWISE NOTED.
18. INSTALL TEMPORARY FENCES TO PROTECT HORSES AND LIVESTOCK WHEN NECESSARY.
19. REMOVAL AND REPLACEMENT OF STREET TRAFFIC SIGNS, MAIL BOXES AND OTHER STRUCTURES BY THE CONTRACTOR TO FACILITATE CONSTRUCTION SHALL BE CONSIDERED INCIDENTAL AND BE INCLUDED IN THE PRICE BID.
20. ALL EXISTING PAYMENT TO REMAIN SHALL BE SAWCUT TO ENSURE A STRAIGHT SMOOTH SURFACE. ALL CUTS MADE IN DRIVEWAYS OR OTHER PAVEMENTS SHALL BE MADE IN STRAIGHT PERPENDICULAR LINES. COST TO BE CONSIDERED SUBSIDIARY TO CONTRACTOR'S BID.



TREATMENT PLANT

1. ALL EXPOSED COMPONENTS REGARDLESS OF LOCATION TO BE CORROSION RESISTANT. (GALVANIZED, ALUMINUM, SST, FRP, ETC).
2. PROPERLY INSULATE, GASKET AND PROTECT TRANSITIONS TO DISSIMILAR METALS (DUCTILE-STAINLESS).
3. ALL EXPOSED VALVES SHALL HAVE HANDWHEELS OR LEVERS. CHAINWHEELS TO BE PROVIDED ON ALL ELEVATED VALVING.
4. ALL PLANT PIPING, CONDUIT, DRAINS, EQUIPMENT, PIPING, ELECTRICAL, COMPONENTS, ETC., SHALL BE PROVIDED WITH PIPE AND EQUIPMENT SUPPORTS, PIPE AND EQUIPMENT HANGERS FOR ALL BRACING AND STABILIZATION FOR A COMPLETE SYSTEM AND PROVIDE WALKING ACCESS AREAS FREE AND CLEAR. ALL PIPE SHALL BE PROPERLY PAINTED OR COATED WITH APPROVED PAINT. CONTRACTOR SHALL LABEL UNITS, PIPING, VALVES, TANKS, ETC., WITH PROPER FLOW DIRECTION AND TYPE. LOCATION AND NUMBER OF PIPE HANGERS AND PIPE SUPPORTS SHOWN IN ONLY APPROX. CONTRACTOR SHALL DESIGN SUPPORTS AS SPECIFIED.
5. ALL PVC/CPVC VALVES AND COMPONENTS FOR USE IN CHEMICAL FEED AND AIR PIPING SHALL HAVE VITON SEALS AND SHALL BE RATED FOR PRODUCT BEING CARRIED.
6. ALL SUSPENDED PIPING SHALL BE SUPPORTED AT NOT LESS THAN EVERY 10 FEET. ALL PIPING LARGER THAN 6" DIAMETER MAY REQUIRE ADDITIONAL SUPPORTS PER SUPPORT SUPPLIERS RECOMMENDATIONS AND/OR SPECIFICATION REQUIREMENTS.
7. ALL WATERTIGHT STRUCTURES CONCRETE SHALL HAVE 72 HOUR WATER TEST FOR LEAKAGE ON STRUCTURE BEFORE BACKFILL.
8. DISSIMILAR METALS IN CONTACT SHALL BE PROVIDED WITH GALVANIC SEPARATION.
9. CONTRACTOR SHALL COORDINATE WITH SUPPLIERS AND PROVIDE DRAIN CONDUIT (2" MINIMUM) FOR ANY/ALL ANALYZERS, RPZ, AIR/VAC VALVES, SAMPLERS OR ANY OTHER ITEM INSIDE BUILDING WHICH DISCHARGES INTERMITTENT WATER AND ROUTE TO DRAIN. NO SURFACE DRAINAGE WILL BE PERMITTED.
10. NOT USED.
11. SUBMIT FOR REVIEW ALL EQUIPMENT SIZES, OPERATING WEIGHTS, VIBRATION FORCES, SUPPORT LOCATIONS, ALONG WITH ANY FLOOR OPENINGS, NOTCHES, AND RECESSES REQUIRED BY SUCH EQUIPMENT. CONCRETE SUPPORT PADS AND/OR FRAMING REQUIRED TO SUPPORT SAID EQUIPMENT SHALL NOT BE FABRICATED AND PLACED UNTIL THE CONCRETE SUPPORT PADS AND/OR FRAMING IS APPROVED TO SUPPORT THE EQUIPMENT.
12. PROCESS EQUIPMENT DELIVERIES SHALL BE COORDINATED SO THAT EQUIPMENT COMES TO SITE NO MORE THAN 60 DAYS PRIOR TO INSTALLATION, UNLESS STORED INDOORS WITH CLIMATE CONTROL.
13. AT ALL POINTS UNDERGROUND WHERE PIPING EXITS STRUCTURES AND TRANSITIONS TO NATURAL GROUND OR OTHER AREAS SUBJECT TO GROUND SETTLING OR OTHER POTENTIAL INTRODUCED STRESSES AFTER INSTALLATION, A BELL-FLANGE WALL PIPE W/SEEP RING AND RESTRAINED MECHANICAL JOINT SHALL BE PROVIDED TO ALLOW FOR DEFLECTION WHETHER BEING SHOWN ON DRAWINGS OR NOT. NO EXCEPTIONS.
14. ALL PIPING 18" AND LARGER SHALL HAVE A MINIMUM COVER OF 48"; AND PIPE SMALLER THAN 18" SHALL HAVE A MINIMUM COVER OF 36" UNLESS OTHERWISE NOTED. PIPE SHALL BE ROUTED AS SHOWN UNLESS MINOR REVISIONS ARE NECESSARY TO AVOID EXISTING PIPES, STRUCTURES, ETC. CONTRACTOR SHALL BE RESPONSIBLE FOR FURNISHING ALL FITTINGS AND ADAPTERS REQUIRED TO MAKE THE ROUTING CHANGES. CONTRACTOR SHALL INCLUDE COST IN PRICE BID.
15. WHERE CONFLICTS OCCUR BETWEEN CIVIL AND MEP DRAWINGS CIVIL DRAWINGS SHALL GOVERN. ELECTRICAL CONTRACTOR IS RESPONSIBLE FOR VERIFICATION AND ANY MINOR MODIFICATIONS REQUIRED TO FACILITATE INSTALLATION AS OUTLINED ON CIVIL DRAWINGS.
16. REVIEW OF ANY/ALL SCOPE AND PROPOSALS FURNISHED BY EQUIPMENT SUPPLIERS AND SHALL VERIFY ALL REQUIREMENTS OUTLINED IN PROPOSED EQUIPMENT SCOPE/PROPOSAL HAVE VERIFIED AGAINST THE DRAWINGS PRIOR TO BID. ANY ADJUSTMENTS AND/OR ADDITIONAL WORK/MATERIALS REQUIRED ARE THE RESPONSIBILITY OF THE CONTRACTOR AND NO ADDITIONAL COMPENSATION WILL BE PROVIDED.
17. MAKE CONNECTIONS TO EXISTING PIPE, EQUIPMENT, ETC. AS REQUIRED AND SHALL PROVIDE ALL FITTINGS, ADAPTERS AND APPURTENANCES REQUIRED TO MAKE THE CONNECTIONS. PROVIDE SUPPORTS REQUIRED FOR A RIGIDLY SUPPORTED SYSTEM.
18. TEMPORARILY RELOCATE PIPING AS REQUIRED TO MAINTAIN SERVICE TO THE EXISTING PLANT.
19. MECHANICAL AND ELECTRICAL EQUIPMENT SUPPORTS, ANCHORAGES, OPENINGS, RECESSES, AND REVEALS NOT SHOWN ON THE STRUCTURAL DRAWINGS THAT ARE REQUIRED BY OTHER CONTRACT DRAWINGS SHALL BE PROVIDED PRIOR TO CASTING CONCRETE.
20. PRIOR TO FABRICATION OF NEW PIPING, INCLUDING SPECIAL FITTINGS AND EXCAVATIONS FOR NEW STRUCTURES, ELECTRICAL CONDUIT AND/OR OTHER PROPOSED UTILITIES, CONTRACTOR SHALL BE RESPONSIBLE FOR VERIFYING THE LOCATION OF ALL EXISTING PIPING AND UTILITIES IN THE CONSTRUCTION AREA. AT TIE-IN LOCATIONS, VERIFY THE SIZING OF EXISTING PIPING BEFORE FABRICATION OF NEW PIPING AND FITTINGS. THE CONTRACTOR SHALL INCLUDE THE COST IN HIS BID FOR TEMPORARILY RELOCATING AND REINSTALLING EXISTING UTILITIES AS REQUIRED FOR CONSTRUCTION OF PROPOSED ITEMS.
21. ANY PLANT UTILITY, PIPING, CONDUIT, COMMUNICATION SYSTEM, ELECTRICAL OR INSTRUMENTATION WIRING DAMAGED DURING CONSTRUCTION SHALL BE REPAIRED AND PLACED BACK IN SERVICE BY THE CONTRACTOR ON THE SAME DAY THAT THE DAMAGE OCCURRED. AFTER 24 HOURS OUT OF SERVICE, OWNER WILL HAVE THE OPTION OF HAVING THE REPAIRS MADE BY A SEPARATE CONTRACTOR AND DEDUCTING THE COST OF SAID REPAIRS FROM THE CONTRACT AMOUNT.
22. GALVANIZED STEEL PRODUCTS SHALL NOT BE USED FOR ANY TREATMENT PLANT STRUCTURE / EQUIPMENT CONSTRUCTION UNLESS SPECIFICALLY CALLED OUT / APPROVED.
23. ALL NEW UNISTRUT, ANCHORS, SUPPORT SYSTEMS AND FASTENING HARDWARE TO BE 316 STAINLESS STEEL.
24. BACKFILLING AGAINST STRUCTURES WHICH HAVE A TOP SLAB SHALL BE DONE ONLY AFTER THE TOP SLAB IS IN PLACE AND THE CONCRETE HAS CURED TO 2/3 OF ITS DESIGN STRENGTH, BUT IN NO CASE LESS THAT 4 DAYS.
25. STAGING AREA WILL ONLY BE USED FOR CONSTRUCTION EQUIPMENT AND MATERIALS USED IN THE CONSTRUCTION OF THE PROJECT. CONSTRUCTION DEBRIS SHOULD NOT BE ALLOWED TO ACCUMULATE AND SHOULD BE REMOVED ON A WEEKLY BASIS.
26. INSTALL METAL TRACER WIRE AND COLOR CODE FOR ALL PIPE INSTALLED.
27. IN ACCORDANCE WITH OAC 252:656-5-4(C)(1), SANITARY SEWER MUST BE AT LEAST 10-FEET FROM AN EXISTING OR PROPOSED WATERMAIN AND AT LEAST 5-FEET ELECTRICAL OR PETROLEUM LINES. SANITARY SEWERS MUST CROSS AT LEAST 24 INCHES ABOVE OR BELOW WATERMAINS.
28. THE CONTRACTOR SHALL NOT OPEN OR CLOSE ANY VALVES AT THE TREATMENT PLANT AND SHALL ASK FOR THE OWNER'S ASSISTANCE.

ELECTRICAL/CONTROLS/SCADA

1. ALL ELECTRICAL CONSTRUCTION SHALL BE IN STRICT ACCORDANCE WITH ALL N.E.C. AND LOCAL ELECTRICAL CODES.
2. ALL EQUIPMENT (INCLUDING MCC & PANELS) SHALL RECEIVE HOUSEKEEPING PADS WITH #4 BARS @ 12" O.C.E.W. MINIMUM THICKNESS SHALL BE 6" OR AS REQUIRED FOR ANCHOR BOLT CLEARANCE. ANCHOR BOLTS SLEEVES MAY BE USED PROVIDED THE SLEEVES ARE NON-SHRINK GROUT FILLED WITH 1-1/2" GROUT UNDER EQUIPMENT BASE. ALL PADS SHALL BE ANCHORED TO CONCRETE SLABS WITH J BARS (#3 @ 12" O.C.) OR EPOXY ANCHORS.
3. ALL SCADA SYSTEM WIRING SHALL BE CONDUIT ENCASED AND IS NOT SHOWN FOR CLARITY. CONTRACTOR TO PROVIDE PROPOSED CONDUIT LAYOUT WITH SCHEDULE TO ENGINEER FOR APPROVAL PRIOR TO CONSTRUCTION.
4. ALL SURFACE MOUNTED PANELS AND PANEL BOARDS ON THE INTERIOR OF EXTERIOR WALLS OR IN OTHER LOCATIONS CONSIDERED DAMP OR WET AND SHALL BE MOUNTED SO AS TO MAINTAIN A 1/4" MINIMUM AIR SPACE BETWEEN THE ENCLOSURE AND THE WALL.
5. ALL EXTERNAL DISPLAYS SHALL BE PROVIDED WITH A WEATHER SHIELD.
6. REVIEW ANY/ALL SCOPE AND PROPOSALS FURNISHED BY EQUIPMENT SUPPLIERS. VERIFY ALL ELECTRICAL REQUIREMENTS OUTLINED IN PROPOSED EQUIPMENT SCOPE/PROPOSAL HAVE BEEN ACCOMMODATED FOR BY ELECTRICAL CONTRACTOR.
7. THE WIRING DIAGRAMS, QUANTITY AND SIZE OF WIRES AND CONDUITS REPRESENT A SUGGESTED ARRANGEMENT BASED UPON SELECTED STANDARD COMPONENTS OF ELECTRICAL EQUIPMENT. IF EQUIPMENT SUPPLIED BY THE MANUFACTURER HAS A LARGER LOAD THAN THE VALUE SHOWN OR INDICATED, THE CABLE, CONDUIT AND ELECTRICAL EQUIPMENT SHALL BE ENLARGED AS REQUIRED TO ACCOMMODATE THE HIGHER LOADING. HOWEVER, THE BASIC SEQUENCE AND METHOD OF CONTROL MUST BE MAINTAINED AS INDICATED ON THE DRAWINGS AND/OR SPECIFICATIONS. CONTRACTOR TO PROVIDE PROPOSED CONDUIT LAYOUT WITH SCHEDULE TO ENGINEER FOR APPROVAL PRIOR TO CONSTRUCTION.

WALL ENGINEERING
223 N. WASHINGTON AVE. DURANT, OK 74701
OKLAHOMA CA #5413 EXP. JUNE 30, 2023

SUBMITTAL / REVISIONS:

DATE	BY	SUBMITTAL / REVISION
03/22	JR	60% SUBMITTAL
06/22	JR	ISSUED FOR BIDDING
07/22	JR	REVISED PER ADDENDUM NO. 1

SHAWNEE MUNICIPAL AUTHORITY
WASTEWATER SYSTEM IMPROVEMENTS
CONTRACT DOCUMENTS VOL. 4 OF 6 - NORTHSIDE WWTP

GENERAL CONSTRUCTION NOTES

PROJECT NO. SHN-20-01
DATE 06/22
DRAWN BY: JR
CHECKED BY: BW
REVIEWED BY: DBW
SCALE: NOT TO SCALE

BAR IS ONE INCH ON ORIGINAL DRAWING
0" 1"
IF NOT ONE INCH ON THIS SHEET, ADJUST SCALES ACCORDINGLY

SHEET
C-2

PIPING LEGEND

RS	RAW SEWAGE - DI CLASS 350 RJ
PE	PRIMARY EFFLUENT - DI CLASS 250 RJ/HDPE DRII
SE	SECONDARY EFFLUENT - DI CLASS 250 RJ
WS	WASTE SLUDGE - DI CLASS 250 RJ
SW	STORM WATER - DI CLASS 250 RJ
FE	FINAL EFFLUENT - DI CLASS 250 RJ
EF	EFFLUENT FORCE MAIN - HDPE DRII/DI CLASS 250 RJ
NPW	NON-POTABLE WATER - DI CLASS 250 RJ
PW	POTABLE WATER - DI CLASS 250 RJ
SL	SLUDGE - DI CLASS 250 RJ
CA	COMPRESSED AIR - UNLINED DI CLASS 250 RJ
DR	DRAIN LINE - DI CLASS 250 RJ

MANHOLE/BOX LEGEND

NO.	DIA	TR	INFLUENT FL	EFFLUENT FL	NORTHING	EASTING
MH-1	6'	957.27'	929.77'	929.76'	756381.2615	2249217.8822
MH-2	6'	959.90'	929.17'	929.16'	756119.4646	2249217.8822
MH-3	6'	964.71'	946.24'	946.24'	756618.3418	2248842.3247
MH-4	6'	965.50'	945.57'	945.57'	756528.6511	2248752.6341
MH-5	6'	958.65'	944.28'	944.28'	756283.5625	2248752.6341
DB-6	4'x4'	962.40'	VARIES	932.08'	756748.6302	2249068.0509
MH-7	4'	964.31'	950.35'	950.30'	756704.1928	2249034.1164
MH-8	4'	964.26'	950.56'	950.46'	756675.6093	2249034.1164
MH-9	4'	962.05'	931.55'	931.45'	756719.4646	2249068.0509
MH-10	4'	962.85'	952.93'	952.83'	756826.0052	2249068.0509
MH-11	4'	962.61'	953.90'	953.80'	756883.0712	2249068.0531
MH-12	4'	964.63'	951.05'	950.95'	756748.6302	2248878.5484
MH-13	4'	963.65'	950.27'	950.17'	756748.6302	2249034.1164

NOTE:

1. MANHOLE M-3, MH-7, MH-8, MH-9, MH-10, MH-11, SHALL HAVE SLOTTED LIDS TO ALLOW FOR VENTILATION.
2. LINE 14-C TO EXTEND SLIGHTLY INTO MH-6 AND CONTAIN AN 8" FLAP VALVE.
3. DB-6 TO BE PRE-ENGINEERED (5.E.) 4'x4' CONCRETE VAULT W/TRAFFIC RATED GRATED TOP. SEE PROFILE FOR LINE ELEVATIONS. SUBMITTAL REQUIRED.
4. SOME VALVES SHOWN ON OTHER DRAWINGS HAVE BEEN OMITTED FOR CLARITY.

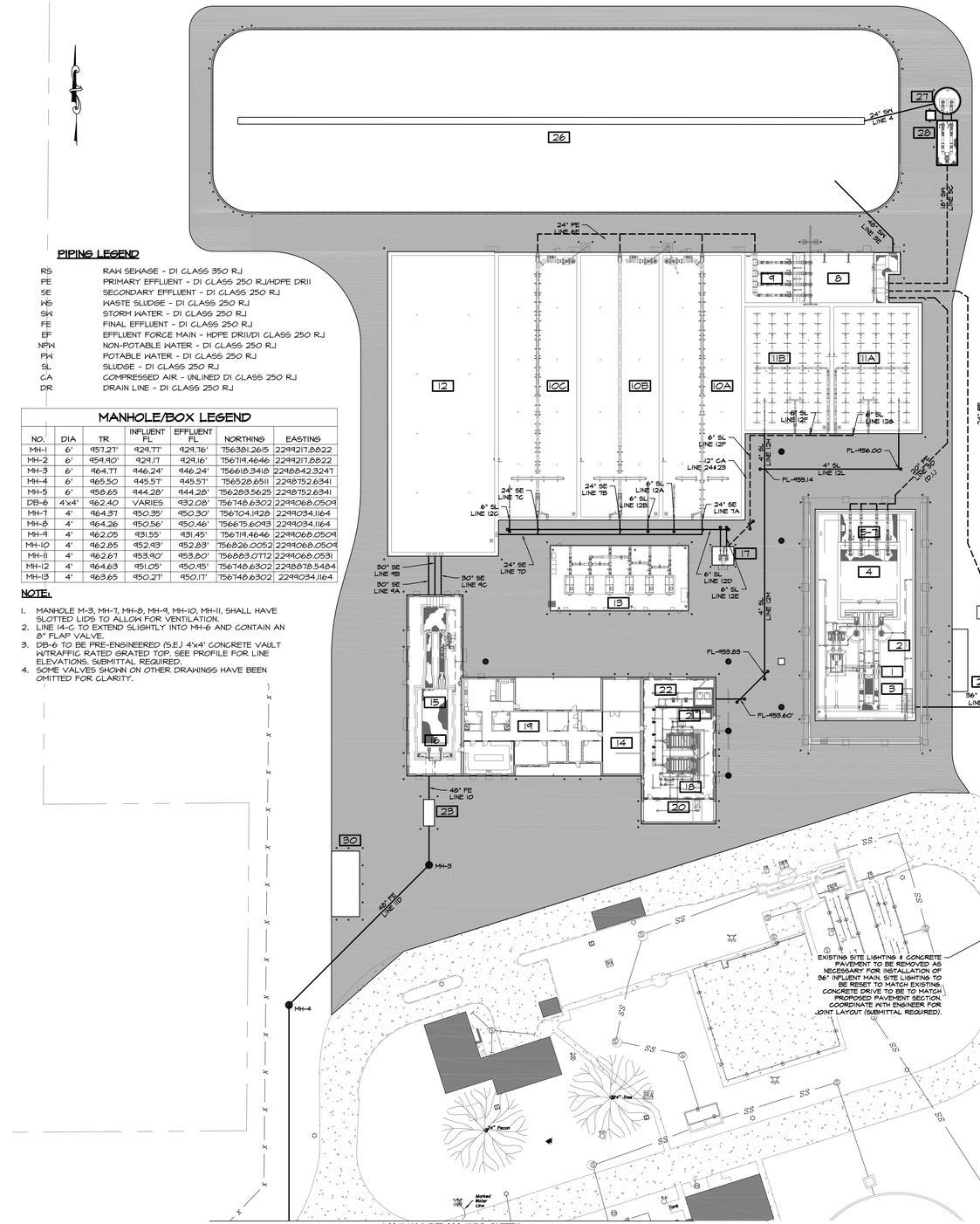

PROPOSED UNIT LEGEND

1	HEADWORKS FINE SCREEN
2	HEADWORKS GRIT CHAMBERS
3	HEADWORKS MANUAL BAR SCREEN
4	INFLUENT LIFT STATION
5	FLOW METER STRUCTURE (ILS-STORM)
6	FLOW METER STRUCTURE (ILS-SBR)
7	FLOW METER STRUCTURE (SS FM)
8	SBR PRE-EQUALIZATION BASIN
9	SBR FLOW CONTROL STRUCTURE
10	SEQUENCING BATCH REACTOR
11	AEROBIC DIGESTER
12	SBR POS-EQUALIZATION BASIN
13	SBR/AD BLOWERS
14	ELECTRIC / CONTROLS
15	UV DISINFECTION
16	NON-POTABLE WATER
17	AD DIGESTED SLUDGE PUMPS
18	BELT FILTER PRESS
19	ADMINISTRATIONS BUILDING
20	SLUDGE LOADING
21	POLYMER FEED SYSTEM
22	NON-POTABLE BOOSTER PUMPS (BFP)
23	EFFLUENT PARSHALL FLUME
24	EFFLUENT LIFT STATION
25	FLOW METER STRUCTURE (ELS)
26	WET WEATHER FLOW EQUALIZATION BASIN
27	FEB RETURN LIFT STATION
28	FLOW METER STRUCTURE (FEBLS)
29	GENERATOR (15KW)
30	GENERATOR (1,750KW)
31	MAG METER VAULT

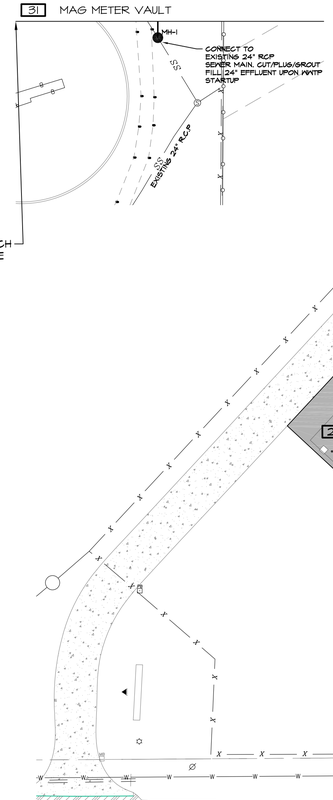

LEGEND

- EXISTING ASPHALT
- EXISTING GRAVEL
- STRUCTURE
- CONCRETE PAVING
- SECURITY FENCE
- EXISTING SECURITY FENCE
- EXISTING BARBWIRE FENCE
- PRESSURE PIPE
- AIR PIPE
- GRAVITY PIPE
- MAG-METER IN VAULT
- CONCRETE MANHOLE
- CONCRETE JUNCTION BOX
- CLEAN OUT
- PIPE BOLLARD
- VALVE

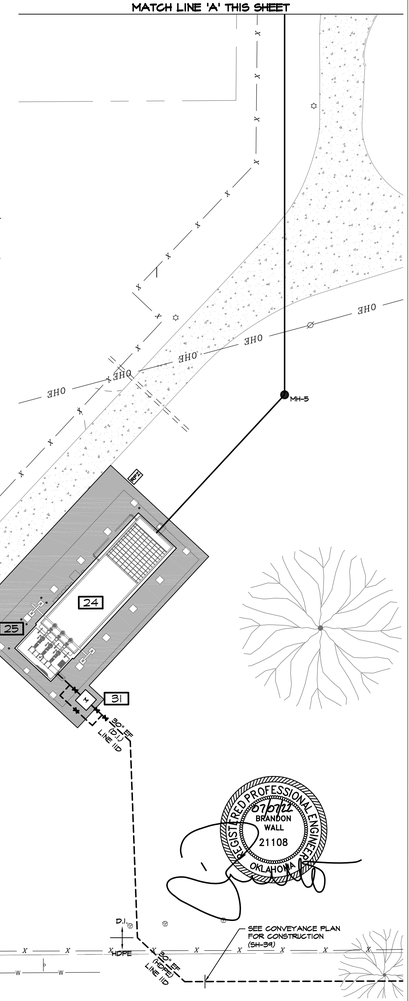

WALL ENGINEERING
223 N. WASHINGTON AVE., DURANT, OK 74701
OKLAHOMA CA #5413 EXP. JUNE 30, 2023

SUBMITTAL / REVISIONS:

DATE	BY	SUBMITTAL / REVISION
03/22	JR	ODEQ SUBMITTAL
06/22	JR	ISSUED FOR BIDDING
07/22	JR	REVISED PER ADDENDUM NO. 1

SHAWNEE MUNICIPAL AUTHORITY
WASTEWATER SYSTEM IMPROVEMENTS
CONTRACT DOCUMENTS VOL. 4 OF 6 - NORTHSIDE WWTP

PRIMARY PIPING PLAN

PROJECT NO.	SHN-20-01
DATE	06/22
DRAWN BY:	JR
CHECKED BY:	BW
REVIEWED BY:	DBW
SCALE:	1"=40'

BAR IS ONE INCH ON ORIGINAL DRAWING
0" 1"
IF NOT ONE INCH ON THIS SHEET, ADJUST SCALES ACCORDINGLY

REGISTERED PROFESSIONAL ENGINEER
BRANDON WALL
21108
OKLAHOMA
07/31/22

SHEET

C-13

MANHOLE/BOX LEGEND

NO.	DIA	TR	INFLUENT FL	EFFLUENT FL	NORTHING	EASTING
MH-1	6'	957.27'	924.71'	924.76'	756381.2615	2249217.8822
MH-2	6'	959.90'	924.17	924.16'	756119.4646	2249217.8822
MH-3	6'	964.77	946.24'	946.24'	756618.3418	2248842.3247
MH-4	6'	965.50	945.57'	945.57'	756528.6511	2248752.6341
MH-5	6'	958.65	944.28'	944.28'	756283.5625	2248752.6341
DB-6	4'x4'	962.40	VARIES	932.08'	756748.6302	2249068.0509
MH-7	4'	964.31	950.35'	950.30'	756704.1928	2249034.1164
MH-8	4'	964.26	950.56'	950.46'	756675.6043	2249034.1164
MH-9	4'	962.05	931.55'	931.45'	756719.4646	2249068.0509
MH-10	4'	962.85	952.93'	952.83'	756826.0052	2249068.0509
MH-11	4'	962.67	953.90'	953.80'	756883.0712	2249068.0531
MH-12	4'	964.63	951.05'	950.95'	756748.6302	2248818.5484
MH-13	4'	963.65	950.27'	950.17'	756748.6302	2249034.1164

NOTE:

1. MANHOLE M-3, MH-7, MH-8, MH-9, MH-10, MH-11, SHALL HAVE SLOTTED LIDS TO ALLOW FOR VENTILATION.
2. LINE 14-C TO EXTEND SLIGHTLY INTO MH-6 AND CONTAIN AN 8" FLAP VALVE.
3. DB-6 TO BE PRE-ENGINEERED (S.E.) 4'x4' CONCRETE VAULT W/TRAFFIC RATED GRATED TOP. SEE PROFILE FOR LINE ELEVATIONS. SUBMITTAL REQUIRED.
4. SOME VALVES SHOWN ON OTHER DRAWINGS HAVE BEEN OMITTED FOR CLARITY.
5. COORDINATE SITE PIPING WITH RELEVANT SHEETS FOR CONNECTIONS TO STRUCTURES, BUILDINGS, ECT.

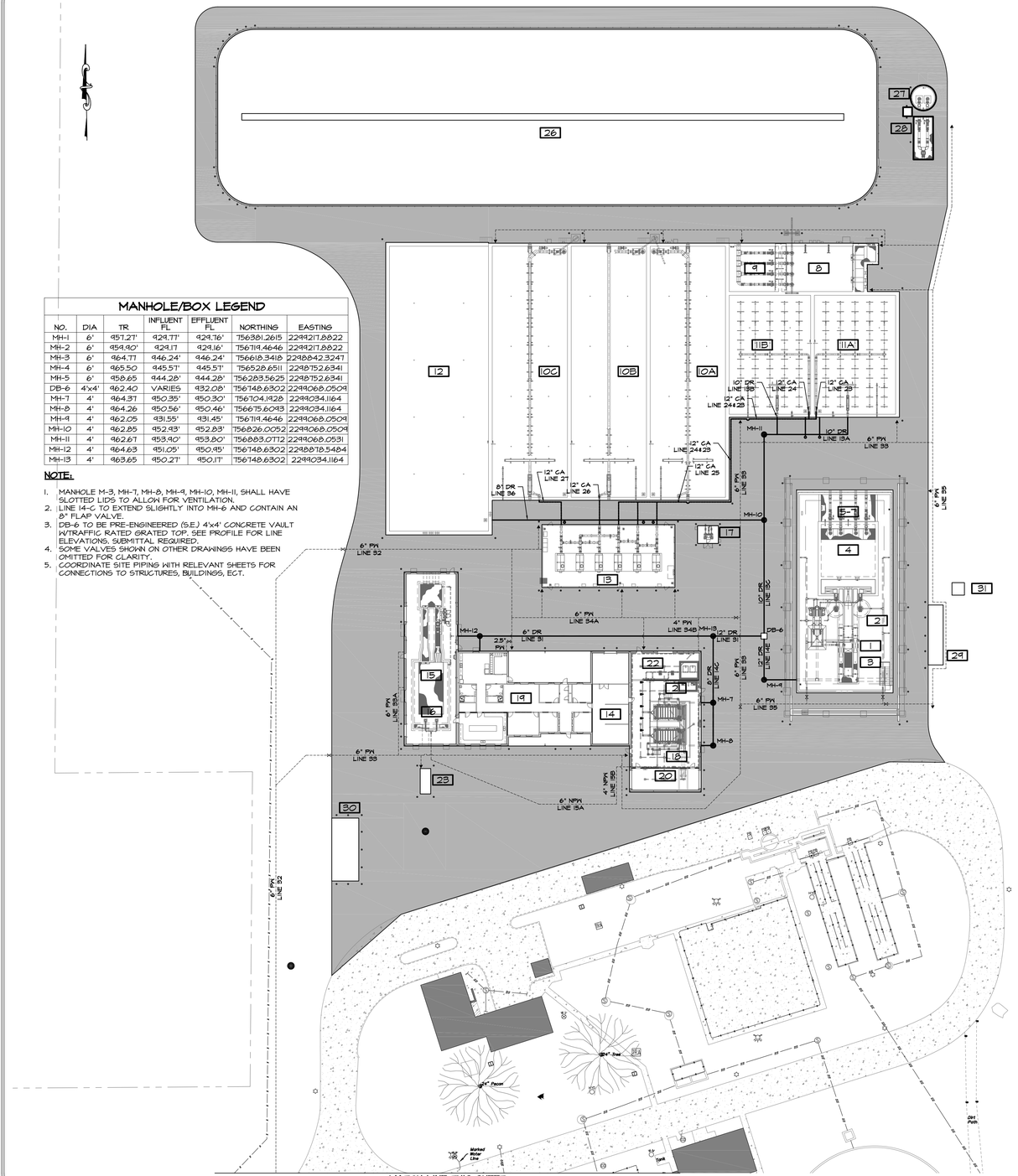

MATCH LINE THIS SHEET

PROPOSED UNIT LEGEND

1. HEADWORKS FINE SCREEN
2. HEADWORKS GRIT CHAMBERS
3. HEADWORKS MANUAL BAR SCREEN
4. INFLUENT LIFT STATION
5. FLOW METER STRUCTURE (ILS-STORM)
6. FLOW METER STRUCTURE (ILS-SBR)
7. FLOW METER STRUCTURE (SS FM)
8. SBR PRE-EQUALIZATION BASIN
9. SBR FLOW CONTROL STRUCTURE
10. SEQUENCING BATCH REACTOR
11. AEROBIC DIGESTER
12. SBR POS-EQUALIZATION BASIN
13. SBR/AD BLOWERS
14. ELECTRIC / CONTROLS
15. UV DISINFECTION
16. NON-POTABLE WATER
17. AD DIGESTED SLUDGE PUMPS
18. BELT FILTER PRESS
19. ADMINISTRATIONS BUILDING
20. SLUDGE LOADING
21. POLYMER FEED SYSTEM
22. NON-POTABLE BOOSTER PUMPS (BFP)
23. EFFLUENT PARSHALL FLUME
24. EFFLUENT LIFT STATION
25. FLOW METER STRUCTURE (ELS)
26. WET WEATHER FLOW EQUALIZATION BASIN
27. FEB RETURN LIFT STATION
28. FLOW METER STRUCTURE (FEBLS)
29. GENERATOR (15KW)
30. GENERATOR (1,750KW)
31. MAG METER VAULT

PIPING LEGEND

RS	RAW SEWAGE - DI CLASS 350 RJ
PE	PRIMARY EFFLUENT - DI CLASS 250 RJ/HDPE DRII
SE	SECONDARY EFFLUENT - DI CLASS 250 RJ
WS	WASTE SLUDGE - DI CLASS 250 RJ
SW	STORM WATER - DI CLASS 250 RJ
FE	FINAL EFFLUENT - DI CLASS 250 RJ
EF	EFFLUENT FORCE MAIN - HDPE DRII/DI CLASS 250 RJ
NPW	NON-POTABLE WATER - DI CLASS 250 RJ
PW	POTABLE WATER - DI CLASS 250 RJ
SL	SLUDGE - DI CLASS 250 RJ
CA	COMPRESSED AIR - UNLINED DI CLASS 250 RJ
DR	DRAIN LINE - DI CLASS 250 RJ

NOTE:

1. ALL PIPING TERMINATIONS INTO STRUCTURE DB-6 TO BE PROVIDED WITH TIDEFLEX VALVES INSTALLED PER MANUFACTURERS RECOMMENDATIONS.

LEGEND

- EXISTING ASPHALT
- EXISTING GRAVEL
- STRUCTURE
- CONCRETE PAVING
- SECURITY FENCE
- EXISTING SECURITY FENCE
- EXISTING BARBWIRE FENCE
- PRESSURE PIPE
- AIR PIPE
- GRAVITY PIPE
- MAG-METER IN VAULT
- CONCRETE MANHOLE
- CONCRETE JUNCTION BOX
- CLEAN OUT
- YARD HYDRANT
- BACKFLOW PREVENTER
- 6" GATE VALVE

MATCH LINE THIS SHEET

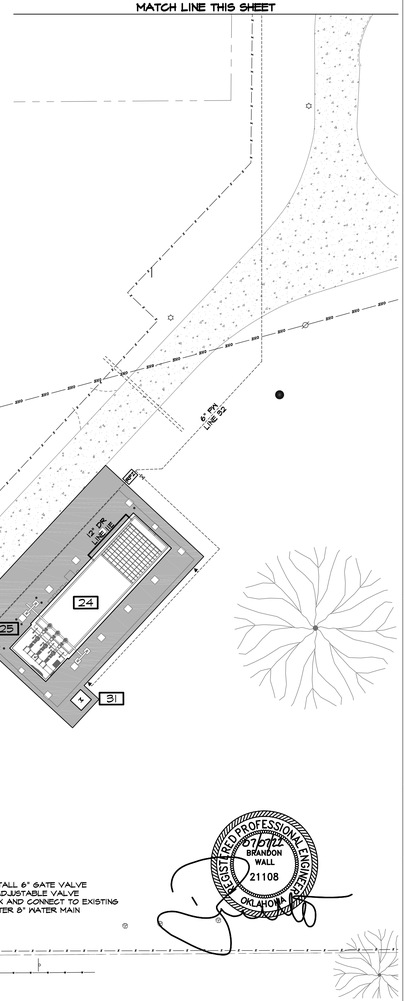

WALL ENGINEERING
223 N. WASHINGTON AVE., DURANT, OK 74701
OKLAHOMA CA #5413 EXP. JUNE 30, 2023

SUBMITTAL / REVISIONS:

DATE	BY	SUBMITTAL / REVISION
03/22	JR.	ODEQ SUBMITTAL
06/22	JR.	ISSUED FOR BIDDING
07/22	JR.	REVISED PER ADDENDUM NO. 1

SHAWNEE MUNICIPAL AUTHORITY
WASTEWATER SYSTEM IMPROVEMENTS
CONTRACT DOCUMENTS VOL. 4 OF 6 - NORTHSIDE WWTP

SECONDARY PIPING PLAN

PROJECT NO.
SHN-20-01
DATE
06/22
DRAWN BY:
JR
CHECKED BY:
BW
REVIEWED BY:
DBW
SCALE:
1"=40'

BAR IS ONE INCH ON ORIGINAL DRAWING
0" 1"
IF NOT ONE INCH ON THIS SHEET, ADJUST SCALES ACCORDINGLY

REGISTERED PROFESSIONAL ENGINEER
BRANDON WALL
21108
OKLAHOMA

SHEET
C-14A

316L SS GATE SCHEDULE STRUCTURE #1

GATE IDENTIFICATION	15L01	15L02	15G01	15G02	15G03
GATE TYPE	SLUICE	SLUICE	CHANNEL	CHANNEL	CHANNEL
GATE SIZE	36" Φ	12" Φ	30"x78"	30"x78"	30"x78"
GATE SERIES	934	924	921	921	921
MOUNTING - FRAME	CW	CW	FE	FE	FE
MOUNTING - INVERT			EMBEDDED	EMBEDDED	EMBEDDED
HOIST REQUIREMENT					
A. MANUAL	HW	HW	HW	HC	HC
B. ELECTRIC	YES	YES	YES	NO	NO
C. STEM COVER	L	L	L	L	L
D. POSITION COVER	MYLAR	MYLAR	MYLAR	MYLAR	MYLAR
E. STEM CONFIGURATION	RISING	RISING	RISING	RISING	RISING
LIFT MOUNTING	WALL	YOKE	YOKE	YOKE	YOKE
LEAKAGE STANDARD	AWWA	AWWA	AWWA	AWWA	AWWA
OPERATING FLOOR ELEV.	934.00'	934.00'	934.00'	934.00'	934.00'
INVERT ELEV.	929.00'	929.00'	929.00'	929.00'	929.00'

316L SS GATE SCHEDULE STRUCTURE #1

GATE IDENTIFICATION	15G04	15G05	15G06	15G07	15G08
GATE TYPE	CHANNEL	CHANNEL	CHANNEL	CHANNEL	CHANNEL
GATE SIZE	30"x78"	30"x78"	30"x78"	30"x78"	30"x78"
GATE SERIES	921	921	921	921	921
MOUNTING - FRAME	FE	FE	FE	FE	FE
MOUNTING - INVERT	EMBEDDED	EMBEDDED	EMBEDDED	EMBEDDED	EMBEDDED
HOIST REQUIREMENT					
A. MANUAL	HC	HW	HC	HC	HC
B. ELECTRIC	NO	YES	NO	NO	NO
C. STEM COVER	L	L	L	L	L
D. POSITION COVER	MYLAR	MYLAR	MYLAR	MYLAR	MYLAR
E. STEM CONFIGURATION	RISING	RISING	RISING	RISING	RISING
LIFT MOUNTING	YOKE	YOKE	YOKE	YOKE	YOKE
LEAKAGE STANDARD	AWWA	AWWA	AWWA	AWWA	AWWA
OPERATING FLOOR ELEV.	934.00'	934.00'	934.00'	934.00'	934.00'
INVERT ELEV.	929.00'	930.50'	929.00'	929.00'	929.00'

316L SS GATE SCHEDULE STRUCTURE #3

GATE IDENTIFICATION	35G01	35G02	35G03
GATE TYPE	CHANNEL	CHANNEL	CHANNEL
GATE SIZE	60"x60"	60"x60"	60"x60"
GATE SERIES	921	921	921
MOUNTING - FRAME	FE	FE	FE
MOUNTING - INVERT	EMBEDDED	EMBEDDED	EMBEDDED
HOIST REQUIREMENT			
A. MANUAL	HW	HW	HW
B. ELECTRIC	YES	YES	YES
C. STEM COVER	L	L	L
D. POSITION COVER	MYLAR	MYLAR	MYLAR
E. STEM CONFIGURATION	RISING	RISING	RISING
LIFT MOUNTING	YOKE	YOKE	YOKE
LEAKAGE STANDARD	AWWA	AWWA	AWWA
OPERATING FLOOR ELEV.	934.00'	934.00'	934.00'
INVERT ELEV.	929.00'	929.00'	929.00'

INDEX
FE: EMBEDDED FRAME
HC: HAND CRANK
GS: GALVANIZED STEEL
CW: CHANNEL WALL
SQN: SQUARE NUT
L: LEXAN

NOTES:
1. NOT USED.
2. NOT USED.
3. GATE WIDTHS LISTED ARE NOMINAL.
4. CONTRACTOR SHALL ADJUST LOCATION OF GRIT WASHER CONVEYER TO ALLOW FOR USE OF ONE DUMPSTER.
5. THERE SHALL NOT BE ANY GRATING OVER GATES WHICH WOULD INTERFERE WITH OPERATION.
6. NOT USED.
7. GRIT PUMPS SHALL BE EQUIPPED WITH CASE HEATING AND FREEZE PROTECTION PER MANUFACTURERS RECOMMENDATIONS.
8. PW WATER CONNECTION TO EQUIPMENT SHALL BE INSTALLED WITH CONNECTION SOLENOID VALVE SUPPLIED BY MANUFACTURER. FIELD ROUTE ELECTRICAL/CONTROLS PER MANUFACTURERS RECOMMENDATIONS.
9. CONTRACTOR SHALL VERIFY WITH OWNER DUMPSTER DIMENSIONING PRIOR TO PLACEMENT OF CLASSIFIER/COMPACTOR DISCHARGE OUTLETS.
10. ALL PIPING AND CONNECTIONS SHALL BE PER MANUFACTURERS RECOMMENDATIONS.
11. ALL ELECTRONICALLY ACTUATED VALVES TO ALSO BE EQUIPPED WHANDWHEEL OPERATORS.
12. SLIDE GATES TO BE MOUNTED PER MANUFACTURERS RECOMMENDATIONS.
13. CONTRACTOR TO INSTALL A 2" RADIUS FILLET BEFORE AND AFTER THE SCREENS TO PREVENT SEDIMENTATION OF SOLIDS. CONTRACTOR SHALL VERIFY WITH MFR. THAT APPROPRIATE CHANNEL VELOCITY WILL BE MAINTAINED.
14. ACTUATED SLIDE GATE EMERGENCY FLOAT TO AUTOMATICALLY CLOSE GATE IN THE EVENT WATER RISES TO HEADWORKS FLOOR.
15. AT CONTRACTORS OPTION, FLOOR OF HEADWORKS MAY BE POURED LEVEL AT ELEVATION GROUTED TO PROPOSED FLOW LINE ELEVATION.
16. COORDINATE LOCATIONS FOR REQUIRED WASH WATER NON POTABLE WATER MAINS WITH HEADWORKS EQUIPMENT SUPPLIER PRIOR TO INSTALLATION.
17. ELECTRONICALLY OPERATED GATE SHALL BE 480 VOLTS/3 PHASE.
18. CONTRACTOR SHALL SUBMIT A COMPLETE PIPING PLAN FOR APPROVAL.
19. CONTRACTOR SHALL PROVIDE PIPING SUPPORTS AS NEEDED REGARDLESS OF BEING SHOWN ON DRAWINGS.
20. 1.5% SLOPE TOWARD CHANNELS MAY BE GROUTED OR CONSTRUCTED WITH THICKENED SLAB. SLOPE TO START AT TOP OF WALL (T.O.W.) ELEVATION & EXTEND OUTWARD.
21. ALL OPEN AREAS OF HEADWORKS STRUCTURE ARE TO RECEIVE GRATING. SOME GRATING IS NOT SHOWN FOR CLARITY.
22. COORDINATE WITH EQUIPMENT SUPPLIER FOR EXACT REQUIREMENTS OF INLET WATER PIPING PRIOR TO BID.
23. EQUIPMENT DRAINS NOT SHOWN IN PIPING SHALL BE FIELD ROUTED TO HEADWORKS CHANNELS PER MANUFACTURER RECOMMENDATIONS.
24. COMPLETE SYSTEM TO BE EQUIPPED WITH A FACTORY DESIGNED FREEZE PROTECTION SYSTEM CONSISTING OF HEAT TAPE, CASE HEATERS AND INSULATION. FREEZE PROTECTION SYSTEM SHALL BE DESIGNED TO ENSURE PROPER OPERATION INDEFENITELY AT -15° FAHRENHEIT. PROVIDE INFORMATION ON FREEZE PROTECTION SYSTEM WITH THE EQUIPMENT SUBMITTAL.
25. ALL EXPOSED PIPING IN HEADWORKS AREA 6" AND SMALLER SHALL BE GROOVED 316 STAINLESS STEEL. COMPLETE SYSTEM TO BE FURNISHED AND DESIGNED BY VICTAULIC.
26. ALL HYDRANTS TO BE FURNISHED WITH STAINLESS STEEL SELF SUPPORTING HOSE RACK AND 50' OF HEAVY DUTY COMMERCIAL HOSE (1").

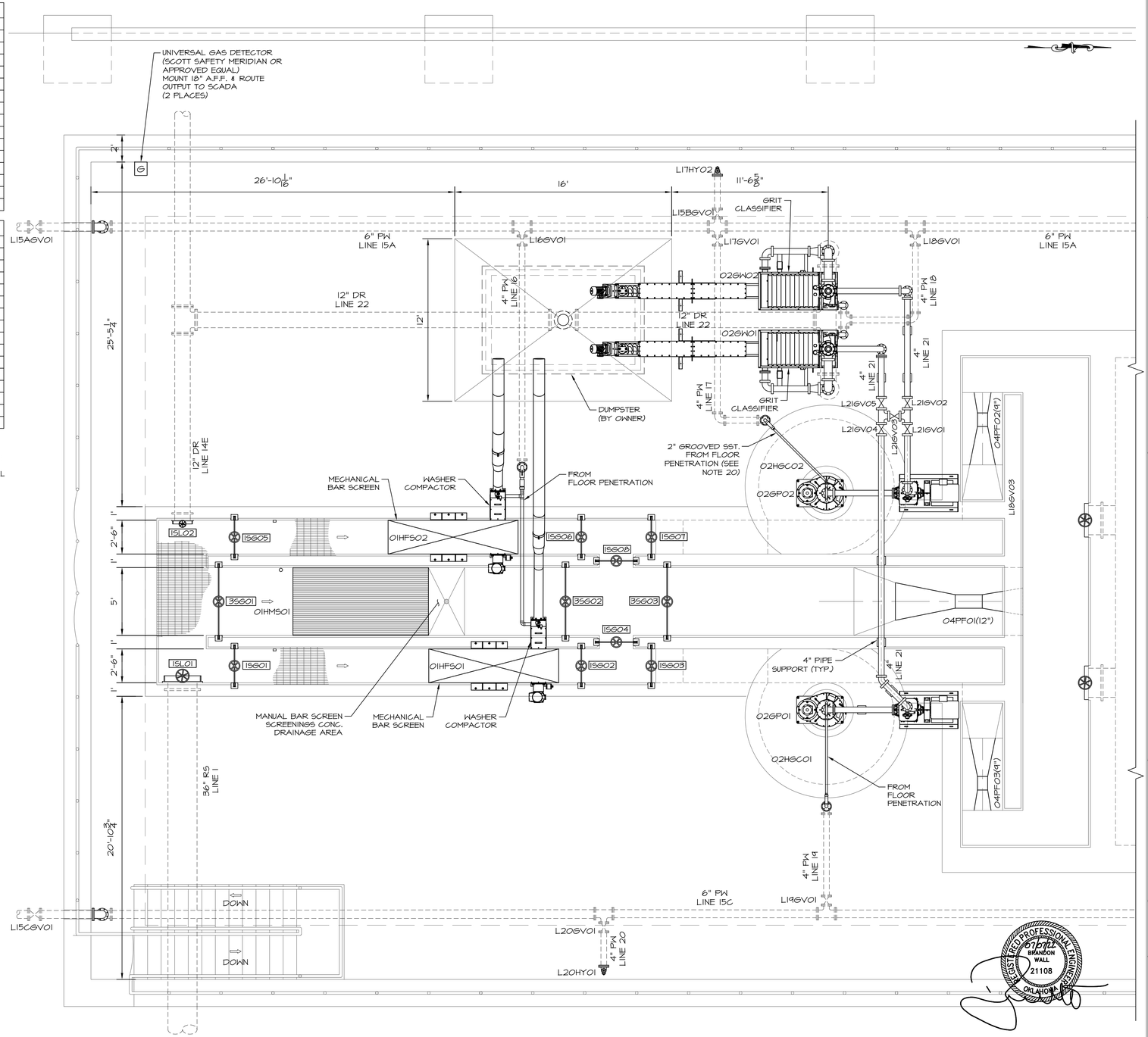

WALL ENGINEERING
223 N. WASHINGTON AVE., DURANT, OK 74701
OKLAHOMA CA #5413 EXP. JUNE 30, 2023

SUBMITTAL / REVISIONS:

DATE	BY	SUBMITTAL / REVISION
03/22	JR	ODEQ SUBMITTAL
06/22	JR	ISSUED FOR BIDDING
07/22	JR	REVISED PER ADDENDUM NO. 1

SHAWNEE MUNICIPAL AUTHORITY
WASTEWATER SYSTEM IMPROVEMENTS
CONTRACT DOCUMENTS VOL. 4 OF 6 - NORTHSIDE WWTP

INFLUENT BARSCREEN, GRIT REMOVAL AND INFLUENT LIFT STATION HEADWORKS PLAN VIEW

PROJECT NO.
SHN-20-01
DATE
06/22
DRAWN BY:
JR
CHECKED BY:
BW
REVIEWED BY:
DBW
SCALE:
1/4"=1'-0"

BAR IS ONE INCH ON ORIGINAL DRAWING
0" 1"
IF NOT ONE INCH ON THIS SHEET, ADJUST SCALES ACCORDINGLY

REGISTERED PROFESSIONAL ENGINEER
BRANDON WALL
21108
OKLAHOMA

SHEET
HW-2

PIPING SCHEDULE STRUCTURE #4

NO.	ITEM	DESCRIPTION/NOTES
1	14" D.I. SPOOL, FLxPE	
2	14" D.I. SPOOL, FLxFL	
3	14" D.I. 90° BEND, FLxFL	WITH RESTRAINED GLAND
4	14" FLEXIBLE COUPLING ADAPTER, MJxFL	
5	14" D.I. DISMANTLING JOINT, FLxFL	
6	14" WALL PIPE, FLxPE	WITH THRUST COLLAR
7	18"x18"x14" DI TEE, MJxMJ	ECCENTRIC
8	18" D.I. SPOOL, MJxMJ	
9	18" D.I. BLIND FLANGE, FL	
10	18"x20" D.I. 90° BEND, FLxFL	ECCENTRIC
11	20" D.I. SPOOL, FLxPE	
12	14" FLANGED MAGNETIC FLOW METER	L2AMM01, L2BMM01, L3AMM01, L3BMM01
13	3" PVC CHECK VALVE	
14	3" SCH. 80 PVC	
15	3" SHC. 80 PVC 90° BEND	
16	FLOOR DRAIN	NEENAH MODEL R-4937-A
17	12"x14" CONCENTRIC REDUCER, FLxFL	
18	PIPE SUPPORT	AS NEEDED, SEE NOTE 7

PUMP SCHEDULE STRUCTURE #4

NO.	FLOW	TDH-DES	FUNCTION	CONTROL	HP	EFFICIENCY MIN.
PP-04101-04104	3,500 GPM	54'	PRIMARY	VFD	75	75.36%

PUMP NOTES:

1. PUMPS SHALL BE PROVIDED WITH BASE ELBOWS, S.S. RAILS, AND S.S. LIFTING CHAINS.
2. CONTRACTOR SHALL PROVIDE FITTINGS AS REQUIRED TO CONNECT BASE ELBOWS TO LIFT STATION PIPING.
3. PUMPS SHALL BE 460 VOLT THREE PHASE.
4. EACH PUMP SHALL BE EQUIPPED WITH A VARIABLE FREQUENCY DRIVE.

NOTES:

1. SEAL CONDUITS TO KEEP WET WELL GASSES OUT OF CONTROL PANEL.
2. LOCATE FLOATS AND CABLE HOLDER AWAY FROM INLET PIPE.
3. WETWELL FLOOR SHALL SLOPE TO PUMPS AS SHOWN.
4. ALL COMPONENTS SUBJECT SHALL BE DUCTILE IRON OR STAINLESS STEEL.
5. ALL ELECTRONICALLY ACTUATED VALVES TO ALSO BE EQUIPPED WITH HAND WHEEL OPERATORS.
6. ALL EXPOSED PIPING SHALL BE FULLY INSULATED AND HEAT TRACED TO PREVENT FROM FREEZING.
7. PIPE SUPPORT LOCATIONS ARE FOR REFERENCE ONLY & MORE MAY BE REQUIRED PER SPECIFICATION REQUIREMENTS AND/OR INDUSTRY STANDARD.
8. WETWELL TO BE EQUIPPED WITH A LEVEL TRANSDUCER AND 3 BACKUP FLOATS (LOW LEVEL, ALARM, INFLUENT CLOSE).
9. ALL HYDRANTS TO BE FURNISHED WITH STAINLESS STEEL WALL MOUNTED HOSE RACK AND 50' OF HEAVY DUTY COMMERCIAL HOSE (1").

316L SS GATE SCHEDULE STRUCTURE #4

GATE IDENTIFICATION	45L01	45L02
GATE TYPE	SLUICE	SLUICE
GATE SIZE	24" Φ	24"
GATE SERIES	925	925
MOUNTING - FRAME	CW	CW
MOUNTING - INVERT	EMBEDED	EMBEDED
HOIST REQUIREMENT		
A. MANUAL	HC	HC
B. ELECTRIC	NO	NO
C. STEM COVER	L	L
D. POSITION COVER	MYLAR	MYLAR
E. STEM CONFIGURATION	RISING	RISING
LIFT MOUNTING	WALL	WALL
LEAKAGE STANDARD	AWWA	AWWA
OPERATING FLOOR ELEV.	939.00'	939.00'
INVERT ELEV.	917.00'	917.00'

INDEX
FE: EMBEDDED FRAME
HC: HAND CRANK
GS: GALVANIZED STEEL
CW: CHANNEL WALL
SQN: SQUARE NUT
L: LEXAN

VALVE SCHEDULE STRUCTURE #4

VALVE I.D.	VALVE TYPE	VALVE SIZE	MOTORIZED
L2ACV01	CHECK	14"	NA
L2APV01	PLUG	14"	NO
L2APV02	PLUG	14"	NO
L2AAR01	ARV W/BALL VALVE & COCK	2"	NA
L2BCV01	CHECK	14"	NA
L2BPV01	PLUG	14"	NO
L2BPV02	PLUG	14"	NO
L2BAR01	ARV W/BALL VALVE & COCK	2"	NA
L3ACV01	CHECK	14"	NA
L3APV01	PLUG	14"	NO
L3APV02	PLUG	14"	NO
L3AAR01	ARV W/BALL VALVE & COCK	2"	NA
L3BCV01	CHECK	14"	NA
L3BPV01	PLUG	14"	NO
L3BPV02	PLUG	14"	NO
L3BAR01	ARV W/BALL VALVE & COCK	2"	NA

NOTES:

1. FIELD ROUTE ARV DRAINS TO WETWELL FLOOR DRAIN IN PVC PIPE (NOT SHOWN FOR CLARITY).

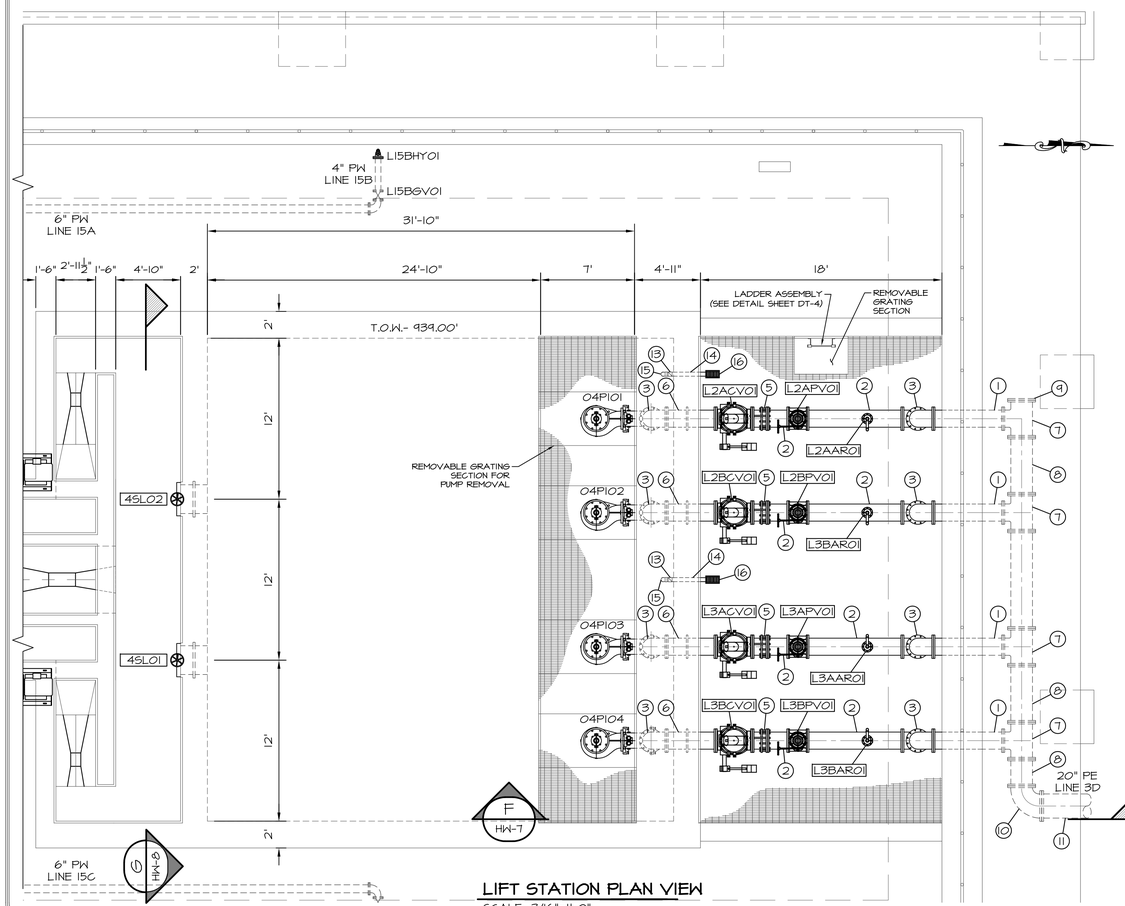

LIFT STATION PLAN VIEW
SCALE: 3/16"=1'-0"

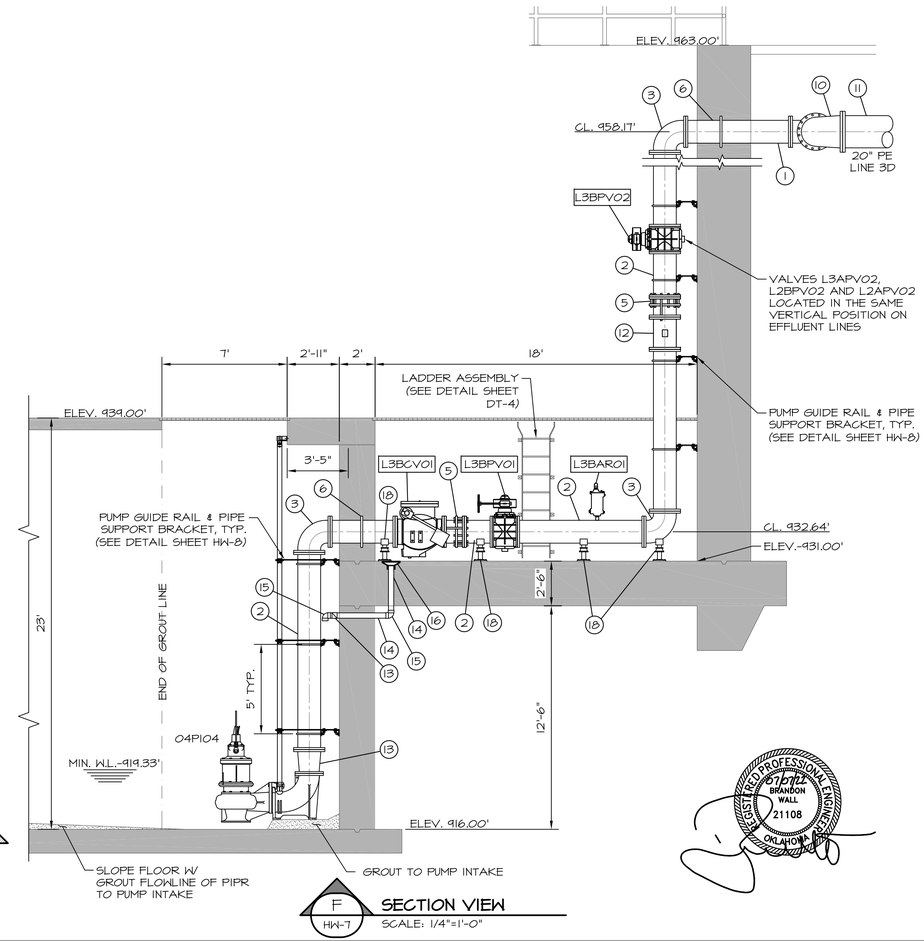

SECTION VIEW
SCALE: 1/4"=1'-0"

WALL ENGINEERING
223 N. WASHINGTON AVE. DURANT, OK 74701
OKLAHOMA CA #5413 EXP. JUNE 30, 2023

SUBMITTAL / REVISIONS:

DATE	BY	SUBMITTAL / REVISION
03/22	JR	ODEQ SUBMITTAL
06/22	JR	ISSUED FOR BIDDING
07/22	JR	REVISED PER ADDENDUM NO. 1

SHAWNEE MUNICIPAL AUTHORITY
WASTEWATER SYSTEM IMPROVEMENTS
CONTRACT DOCUMENTS VOL. 4 OF 6 - NORTHSIDE WWTP

INFLUENT BARSCREEN, GRIT REMOVAL AND INFLUENT LIFT STATION LIFT STATION PLAN AND SECTION

PROJECT NO.
SHN-20-01
DATE
06/22
DRAWN BY:
JR
CHECKED BY:
BW
REVIEWED BY:
DBW
SCALE:
AS SHOWN

BAR IS ONE INCH ON ORIGINAL DRAWING
0" 1"
IF NOT ONE INCH ON THIS SHEET, ADJUST SCALES ACCORDINGLY

SHEET
HW-7

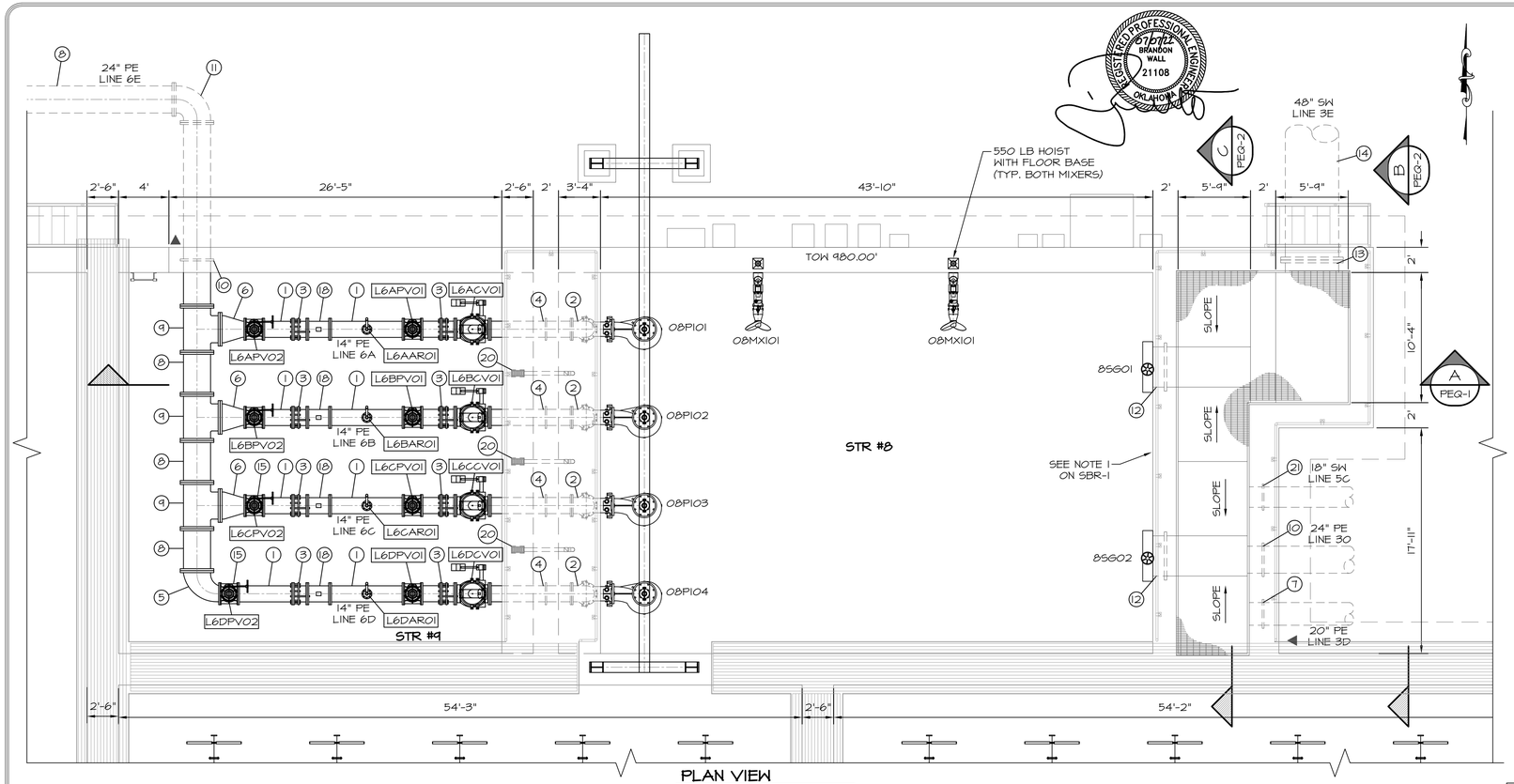

PLAN VIEW
SCALE: 3/16"=1'-0"

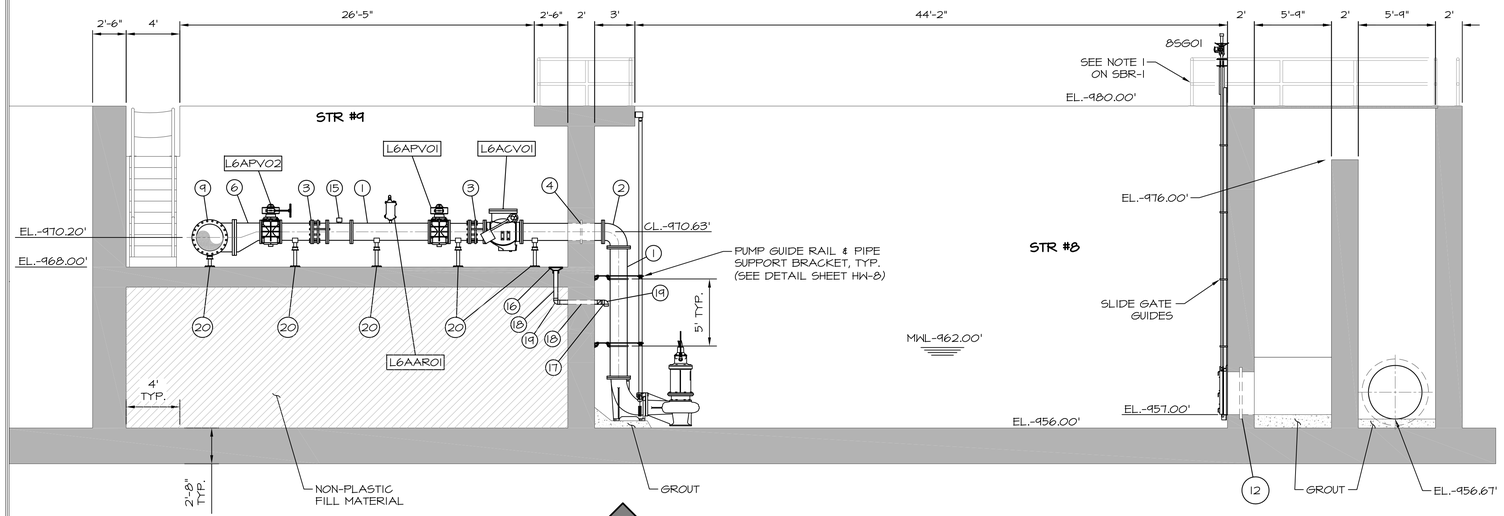

A PEQ-1 SECTION
SCALE: 3/16"=1'-0"

NOTES:

1. SEAL CONDUITS TO KEEP WET WELL GASSES OUT OF CONTROL PANEL.
2. LOCATE FLOATS AND CABLE HOLDER AWAY FROM INLET PIPE.
3. WETWELL FLOOR SHALL SLOPE TO PUMPS AS SHOWN.
4. ALL COMPONENTS SHALL BE DUCTILE IRON OR STAINLESS STEEL.
5. ALL ELECTRONICALLY ACTUATED VALVES TO ALSO BE EQUIPPED WITH HAND WHEEL OPERATORS.
6. PIPE SUPPORT LOCATIONS ARE FOR REFERENCE ONLY & MORE MAY BE REQUIRED PER SPECIFICATION REQUIREMENTS AND/OR INDUSTRY STANDARD.
7. WETWELL TO BE EQUIPPED WITH A LEVEL TRANSDUCER AND 3 BACKUP FLOATS (LOW LEVEL, ALARM, INFLUENT CLOSE).
8. PROVIDE MOTORIZED TROLLEY HOIST CAPABLE OF LIFTING SUBMERSIBLE PUMPS FROM WET WELL FOR MAINTENANCE AND REPAIR.
9. HOIST SUPPLIER SHALL INSPECT AND CERTIFY HOIST INSTALLATION MEETS MINIMUM STANDARDS AND IS APPROPRIATE FOR THIS APPLICATION.

316L SS GATE SCHEDULE STRUCTURE #8

GATE IDENTIFICATION	85G01	85G02
GATE TYPE	SLUICE	SLUICE
GATE SIZE	36" Φ	36" Φ
GATE SERIES	925	925
MOUNTING - FRAME	CW	CW
MOUNTING - INVERT	EMBEDED	EMBEDED
A. MANUAL	HW	HW
B. ELECTRIC*	YES	YES
C. STEM COVER	L	L
D. POSITION COVER	MYLAR	MYLAR
E. STEM CONFIGURATION	RISING	RISING
LIFT MOUNTING	WALL	WALL
LEAKAGE STANDARD	AWWA	AWWA
OPERATING FLOOR ELEV.	980.00'	980.00'
INVERT ELEV.	957.00'	957.00'

ALL GATES ARE UPWARD OPENING UNLESS OTHERWISE SPECIFIED
*ELECTRICALLY OPERATED GATE: 480 VOLTS/3 PHASE

VALVE SCHEDULE - STRUCTURE #8 & #9

VALVE I.D.	VALVE TYPE	VALVE SIZE	MOTORIZED
L6ACVO1	CHECK	14"	NA
L6APVO1	PLUG	14"	NO
L6AARO1	COMBINATION AIR	2"	NA
L6APVO2	PLUG	14"	NO
L6BCVO1	CHECK	14"	NA
L6BPVO1	PLUG	14"	NO
L6BARO1	COMBINATION AIR	2"	NA
L6BPVO2	PLUG	14"	NO
L6CCVO1	CHECK	14"	NA
L6CPVO1	PLUG	14"	NO
L6CARO1	COMBINATION AIR	2"	NA
L6CPVO2	PLUG	14"	NO
L6DCVO1	CHECK	14"	NA
L6DPVO1	PLUG	14"	NO
L6DARO1	COMBINATION AIR	2"	NA
L6DPVO2	PLUG	14"	NO

PIPING SCHEDULE STRUCTURE #8 & #9

NO.	ITEM	DESCRIPTION
1	14" D.I. SPOOL, FLxFL	
2	14" D.I. 90° BEND, FLxFL	WITH RESTRAINT GLAND
3	14" D.I. DISMANTLING JOINT, FLxFL	
4	14" WALL PIPE, FLxPE	WITH THRUST COLLAR
5	14"x24" D.I. REDUCING 90° BEND, FLxFL	ECCENTRIC
6	14"x24" D.I. ECCENTRIC REDUCER, FLxFL	ECCENTRIC
7	20" D.I. WALL PIPE, FLxPE	
8	24" D.I. SPOOL, MJxMJ	
9	24" D.I. TEE, FLxFL	
10	24" D.I. WALL PIPE, FLxPE	WITH THRUST COLLAR
11	24" D.I. 90° BEND, MJxMJ	
12	36" D.I. WALL PIPE, FLxPE	
13	48" D.I. WALL PIPE, FLxPE	
14	48" D.I. SPOOL, FLxPE	
15	14" FLANGED MAGNETIC FLOW METER	L6AMM01, L6BMM01, L6CMM01
16	FLOOR DRAIN	NEENAH MODEL R-4937-A
17	3" PVC CHECK VALVE	
18	3" SCH. 80 PVC	IN 4" D.I. SLEEVE
19	3" SCH. 80 PVC 90° BEND	
20	ADJUSTABLE PIPE SUPPORT/STAND	
21	18" D.I. WALL PIPE, FLxPE	

PUMP SCHEDULE STRUCTURE #8

NO.	FLOW	TDH-DES	FUNCTION	CONTROL	HP	EFFICIENCY MIN.
08PI01-08PI04	4,700 GPM	20'	PRIMARY	VFD	40	78.84%

MIXER SCHEDULE STRUCTURE #8

NO.	TYPE	MANUF.	MODEL	PROPELLER RPM
08MX101-08MX102	SUBMERSIBLE	WILO	TR 75-2.17-6/16	1175

WALL ENGINEERING
223 N. WASHINGTON AVE., DURANT, OK 74701
OKLAHOMA CA #5413 EXP. JUNE 30, 2023

SUBMITTAL / REVISIONS:

DATE	BY	SUBMITTAL / REVISION
03/22	JR	ODEQ SUBMITTAL
06/22	JR	ISSUED FOR BIDDING
07/22	JR	REVISED PER ADDENDUM NO. 1

SHAWNEE MUNICIPAL AUTHORITY
WASTEWATER SYSTEM IMPROVEMENTS
CONTRACT DOCUMENTS VOL. 4 OF 6 - NORTHSIDE WWTP

PRE-EQUALIZATION BASIN
PLAN, SECTION AND SCHEDULES

PROJECT NO.
SHN-20-01
DATE
06/22
DRAWN BY:
JR
CHECKED BY:
BW
REVIEWED BY:
DBW
SCALE:
AS SHOWN

BAR IS ONE INCH ON ORIGINAL DRAWING
0" 1"
IF NOT ONE INCH ON THIS SHEET, ADJUST SCALES ACCORDINGLY

SHEET
PEQ-1

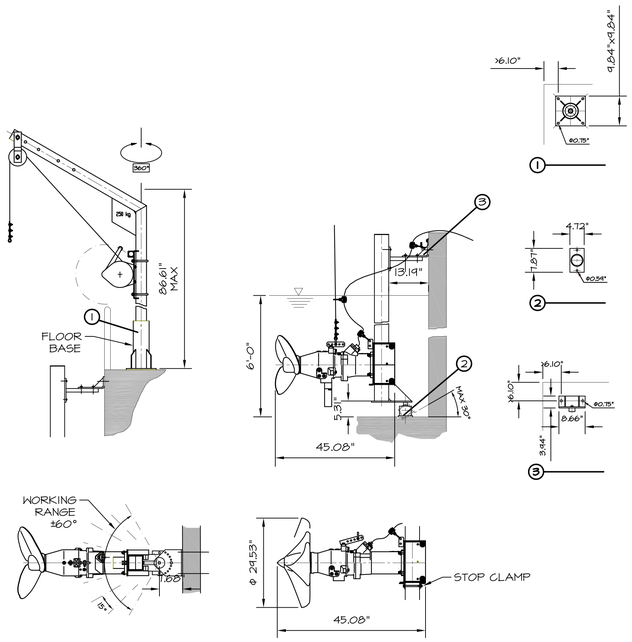

MIXER DETAIL

SCALE: 3/4"=1'-0"

NOTES:

1. COORDINATE WITH MANUFACTURER FOR ADDITIONAL INSTALLATION DETAILS INCLUDING MOUNTING AND ANCHORING.
2. COORDINATE WITH MANUFACTURER FOR NUMBER AND SPACING OF WALL SUPPORTS REQUIRED FOR INSTALLATION.

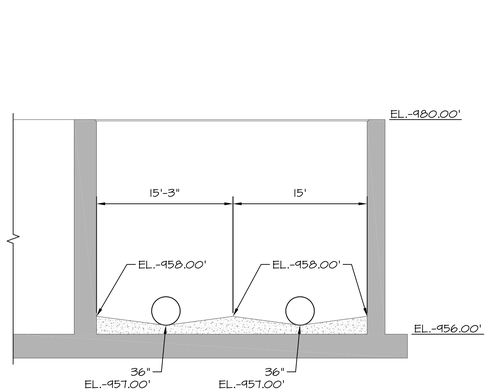

C PEQ-1 **SECTION**

SCALE: 1/8"=1'-0"

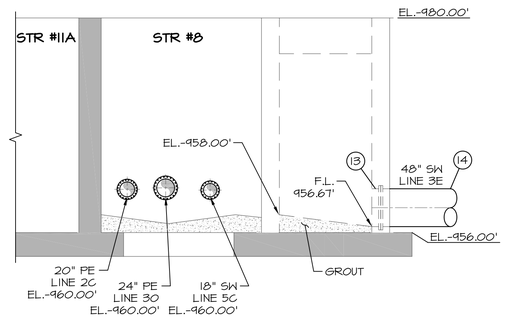

B PEQ-1 **SECTION**

SCALE: 1/8"=1'-0"



NOTES:

1. SEAL CONDUITS TO KEEP WET WELL GASSES OUT OF CONTROL PANEL.
2. LOCATE FLOATS AND CABLE HOLDER AWAY FROM INLET PIPE.
3. WETWELL FLOOR SHALL SLOPE TO PUMPS AS SHOWN.
4. ALL COMPONENTS SHALL BE DUCTILE IRON OR STAINLESS STEEL.
5. ALL ELECTRONICALLY ACTUATED VALVES TO ALSO BE EQUIPPED WITH HAND WHEEL OPERATORS.
6. PIPE SUPPORT LOCATIONS ARE FOR REFERENCE ONLY & MORE MAY BE REQUIRED PER SPECIFICATION REQUIREMENTS AND/OR INDUSTRY STANDARD.
7. WETWELL TO BE EQUIPPED WITH A LEVEL TRANSDUCER AND 3 BACKUP FLOATS (LOW LEVEL ALARM, INFLUENT CLOSE).
8. PROVIDE MOTORIZED TROLLEY HOIST CAPABLE OF LIFTING SUBMERSIBLE PUMPS FROM WET WELL FOR MAINTENANCE AND REPAIR.
9. HOIST SUPPLIER SHALL INSPECT AND CERTIFY HOIST INSTALLATION MEETS MINIMUM STANDARDS AND IS APPROPRIATE FOR THIS APPLICATION.

316L SS GATE SCHEDULE STRUCTURE #8

GATE IDENTIFICATION	8SG01	8SG02
GATE TYPE	SLUICE	SLUICE
GATE SIZE	36" Φ	36" Φ
GATE SERIES	925	925
MOUNTING - FRAME	CW	CW
MOUNTING - INVERT	EMBEDED	EMBEDED
A. MANUAL	HW	HW
B. ELECTRIC*	YES	YES
C. STEM COVER	L	L
D. POSITION COVER	MYLAR	MYLAR
E. STEM CONFIGURATION	RISING	RISING
LIFT MOUNTING	WALL	WALL
LEAKAGE STANDARD	AWWA	AWWA
OPERATING FLOOR ELEV.	980.00'	980.00'
INVERT ELEV.	957.00'	957.00'
ALL GATES ARE UPWARD OPENING UNLESS OTHERWISE SPECIFIED *ELECTRICALLY OPERATED GATE: 480 VOLTS/3 PHASE		

VALVE SCHEDULE - STRUCTURE #8 & #9

VALVE I.D.	VALVE TYPE	VALVE SIZE	MOTORIZED
L6ACV01	CHECK	14"	NA
L6APV01	PLUG	14"	NO
L6AAR01	COMBINATION AIR	2"	NA
L6APV02	PLUG	14"	NO
L6BCV01	CHECK	14"	NA
L6BPV01	PLUG	14"	NO
L6BAR01	COMBINATION AIR	2"	NA
L6BPV02	PLUG	14"	NO
L6CCV01	CHECK	14"	NA
L6CPV01	PLUG	14"	NO
L6CAR01	COMBINATION AIR	2"	NA
L6CPV02	PLUG	14"	NO
L6DCV01	CHECK	14"	NA
L6DPV01	PLUG	14"	NO
L6DAR01	COMBINATION AIR	2"	NA
L6DPV02	PLUG	14"	NO

PIPING SCHEDULE STRUCTURE #8 & #9

NO.	ITEM	DESCRIPTION
①	14" D.I. SPOOL, FLxFL	
②	14" D.I. 90° BEND, FLxFL	WITH RESTRAINT GLAND
③	14" D.I. DISMANTLING JOINT, FLxFL	
④	14" WALL PIPE, FLxPE	WITH THRUST COLLAR
⑤	14"x24" D.I. REDUCING 90° BEND, FLxFL	ECCENTRIC
⑥	14"x24" D.I. ECCENTRIC REDUCER, FLxFL	ECCENTRIC
⑦	20" D.I. WALL PIPE, FLxPE	
⑧	24" D.I. SPOOL, MJxMJ	
⑨	24" D.I. TEE, FLxFL	
⑩	24" D.I. WALL PIPE, FLxPE	WITH THRUST COLLAR
⑪	24" D.I. 90° BEND, MJxMJ	
⑫	36" D.I. WALL PIPE, FLxPE	
⑬	48" D.I. WALL PIPE, FLxPE	
⑭	48" D.I. SPOOL, FLxPE	
⑮	14" FLANGED MAGNETIC FLOW METER	L6AMM01, L6BMM01, L6CMM01
⑯	FLOOR DRAIN	NEENAH MODEL R-4937-A
⑰	3" PVC CHECK VALVE	
⑱	3" SCH. 80 PVC	IN 4" D.I. SLEEVE
⑲	3" SCH. 80 PVC 90° BEND	
⑳	ADJUSTABLE PIPE SUPPORT/STAND	
㉑	18" D.I. WALL PIPE, FLxPE	

PUMP SCHEDULE STRUCTURE #8

NO.	FLOW	TDH-DES	FUNCTION	CONTROL	HP	EFFICIENCY MIN.
08P101-08P104	4,700 GPM	20'	PRIMARY	VFD	40	78.84%

MIXER SCHEDULE STRUCTURE #8

NO.	TYPE	MANUF.	MODEL	PROPELLER RPM
08MX101-08MX102	SUBMERSIBLE	WILO	TR 75-2.17-6/16	1175

WALL ENGINEERING

223 N. WASHINGTON AVE. DURANT, OK 74701
OKLAHOMA CA #5413 EXP. JUNE 30, 2023

SUBMITTAL / REVISIONS:

DATE	BY	SUBMITTAL / REVISION
03/22	JR	ODEQ SUBMITTAL
06/22	JR	ISSUED FOR BIDDING
07/22	JR	REVISED PER ADDENDUM NO. 1

SHAWNEE MUNICIPAL AUTHORITY
WASTEWATER SYSTEM IMPROVEMENTS
CONTRACT DOCUMENTS VOL. 4 OF 6 - NORTHSIDE WWTP

PRE-EQUALIZATION BASIN
SECTION, DETAILS AND SCHEDULES

PROJECT NO.
SHN-20-01

DATE
06/22

DRAWN BY:
JR

CHECKED BY:
BW

REVIEWED BY:
DBW

SCALE:
AS SHOWN

BAR IS ONE INCH ON ORIGINAL DRAWING
0" 1"
IF NOT ONE INCH ON THIS SHEET, ADJUST SCALES ACCORDINGLY

SHEET

PEQ-2

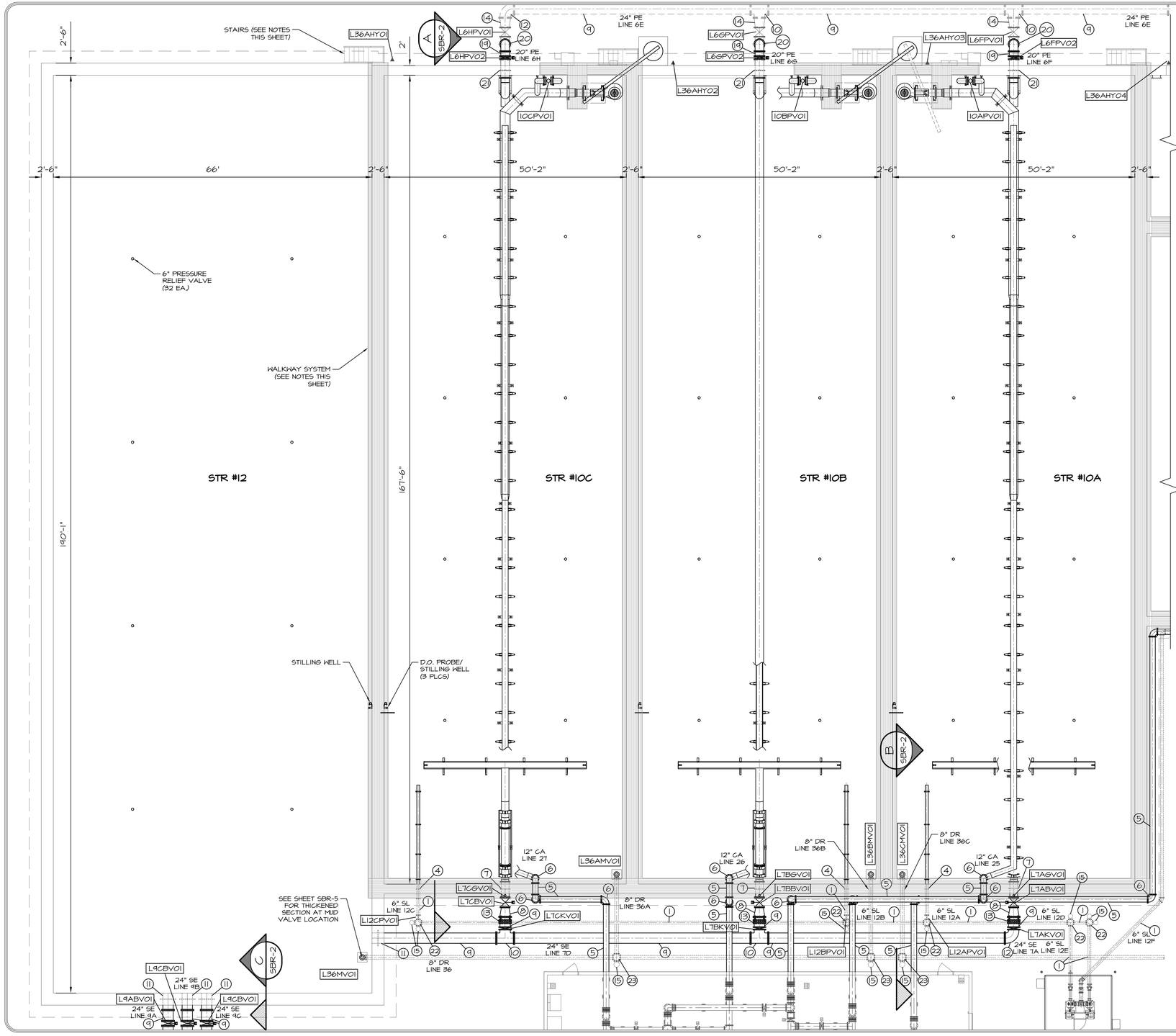

HANDRAIL/WALKWAY NOTES:

1. COMPLETE HANDRAIL SYSTEM (INCLUDING STAIRS AND PUMP MAINTENANCE PLATFORM) TO BE FURNISHED AS A SYSTEM (INCLUDING PRE-EQ BASIN) FROM A SINGLE SUPPLIER. COMPLETE SYSTEM TO BE STAMPED BY AND OKLAHOMA STRUCTURAL ENGINEER (S.E.).
2. COORDINATE WITH PUMP SUPPLIER TO VERIFY CLEARANCE REQUIRED FOR MOTIVE PUMP REMOVAL.
3. STAIRS TO BE AS CLOSE AS PRACTICAL TO SBR WALL.

VALVE SCHEDULE - STRUCTURE #10A-10C & #12

VALVE I.D.	VALVE TYPE	VALVE SIZE	MOTORIZED
L6FPV01	PLUG	20"	NO
L6FPV02	PLUG	20"	YES
L7ABV01	BUTTERFLY	18"	YES
L7AKV01	KNIFE	24"	NO
L6GPV01	PLUG	20"	NO
L6GPV02	PLUG	20"	YES
L7BBV01	BUTTERFLY	18"	YES
L7BKV01	KNIFE	24"	NO
L6HPV01	PLUG	20"	NO
L6HPV01	PLUG	20"	YES
L7CBV01	BUTTERFLY	18"	YES
L7CKV01	KNIFE	24"	NO
10APV01	PLUG	12"	NO
10BPV01	PLUG	12"	NO
10CPV01	PLUG	12"	NO
L12APV01	PLUG	6"	YES
L12BPV01	PLUG	6"	YES
L12CPV01	PLUG	6"	YES
L9ABV01	BUTTERFLY	24"	YES
L9BBV01	BUTTERFLY	24"	YES
L9CBV01	BUTTERFLY	24"	YES
L36AMV01	MUD	8"	NO
L36BMV01	MUD	8"	NO
L36CMV01	MUD	8"	NO
L7AGV01	GLOBE	¾"	NO
L7BGV01	GLOBE	¾"	NO
L7CGV01	GLOBE	¾"	NO

NOTES:

1. MUD VALVES SHALL BE FURNISHED WITH STEM, WALL ANCHORS, AND HANDWHEEL OPERATOR IN A COMPLETE SYSTEM FOR WALL MOUNTING WITH WHEEL OPERATOR AT WALKWAY LEVEL. SUBMITTAL REQUIRED.
2. ALL MOTORIZED VALVES TO BE SUPPLIED WITH HANDWHEEL OPERATORS.
3. L10APV01, L10BPV01, AND L10CPV01 TO BE FURNISHED WITH STEMS AND STEM SUPPORTS TO EXTEND TO THE TOP OF THE BASIN WALL PER THE MANUFACTURERS RECOMMENDATIONS.
4. GLOBE VALVES TO BE USED TO FILL SBR DECANTER TO RELEASE AIR.
5. AIR PIPING TO BE SUPPORTED TO PREVENT SLIPPAGE AND TO BE LOOSELY ATTACHED TO ALLOW PIPE MOVEMENT.
6. AIR PIPING SHALL BE GROOVED DUCTILE IRON. COMPLETE SYSTEM TO BE DESIGNED AND FURNISHED BY VICTAULIC.

PIPING SCHEDULE STRUCTURE #10A-10C & #12

NO.	ITEM	DESCRIPTION/NOTES
1	6" D.I. SPOOL	
2	6" D.I. 90° BEND, FLxFL	
3	6" D.I. TEE, FLxFL	
4	6" D.I. WALL PIPE, FLxPE	WITH THRUST COLLAR
5	12" D.I. SPOOL, GRxGR	NOTE 6 (SBR-3)
6	12" D.I. 90° BEND, GRxGR	NOTE 6 (SBR-3)
7	18" D.I. WALL PIPE, FLxFL	WITH THRUST COLLAR
8	18"x24" D.I. ECCENTRIC REDUCER, FLxFL	ECCENTRIC
9	24" D.I. SPOOL	
10	24" D.I. TEE, MJ	
11	24" D.I. WALL PIPE, FLxPE	WITH THRUST COLLAR
12	24" D.I. 90° BEND, MJxMJ	
13	24" D.I. DISMANTLING JOINT, MJxMJ	
14	24"x20" D.I. ECCENTRIC REDUCER, MJxMJ	ECCENTRIC
15	CLEANOUT	SEE DETAIL SHEETS
16	12" EXPANSION JOINT	BY VICTAULIC
17	ADJUSTABLE PIPE SUPPORT/STAND	SPACE AS NEEDED
18	WALL MOUNTED PIPE SUPPORT	
19	20" D.I. SPOOL, FLxFL/FLxMJ	MJ UNDERGROUND
20	20" D.I. 90° BEND, MJxMJ	
21	20" D.I. WALL PIPE, FLxPE	WITH THRUST COLLAR
22	6" D.I. CROSS, MJxMJ	
23	8" D.I. CROSS, MJxMJ	
24	CONCRETE PIPE SUPPORT	

NOTES:
1. PROVIDE PIPE SUPPORTS AS NECESSARY. NOT SHOWN FOR CLARITY.

REGISTERED PROFESSIONAL ENGINEER
06/24/22
BRANDON WALL
21108
OKLAHOMA

WALL ENGINEERING
223 N. WASHINGTON AVE., DURANT, OK 74701
OKLAHOMA CA #5413 EXP. JUNE 30, 2023

SUBMITTAL / REVISIONS:

DATE	BY	SUBMITTAL / REVISION
03/22	JR	ODEQ SUBMITTAL
06/22	JR	ISSUED FOR BIDDING

SHAWNEE MUNICIPAL AUTHORITY
WASTEWATER SYSTEM IMPROVEMENTS
CONTRACT DOCUMENTS VOL. 4 OF 6 - NORTHSIDE WWTP

SEQUENCING BATCH REACTOR
PLAN VIEW AND SCHEDULES

PROJECT NO.
SHN-20-01
DATE
06/22
DRAWN BY:
JR
CHECKED BY:
BW
REVIEWED BY:
DBW
SCALE:
3/32"=1'-0"

BAR IS ONE INCH ON ORIGINAL DRAWING
0" 1"
IF NOT ONE INCH ON THIS SHEET, ADJUST SCALES ACCORDINGLY

SHEET
SBR-1

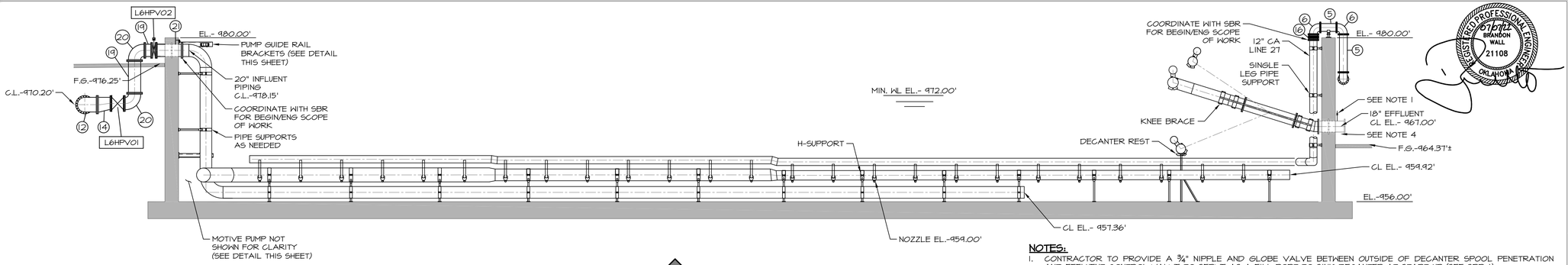

A SBR-1 **SECTION**
SCALE: 1/8"=1'-0"

NOTES:

1. CONTRACTOR TO PROVIDE A ¾" NIPPLE AND GLOBE VALVE BETWEEN OUTSIDE OF DECANTER SPOOL PENETRATION AND EFFLUENT CONTROL VALVE TO SERVE AS A FILL PORT TO SINK DECANTER AT START-UP (SEE SBR-1).
2. DECANTER OUTLET PIPING MUST BE DESIGNED WITH A SUBMERGED OUTLET OR TRAPS TO PREVENT AIR FROM ENTERING THE DECANTER.
3. ALL PIPE ELEVATIONS SHOWN ARE CENTER OF PIPE UNLESS OTHERWISE INDICATED.
4. ALL FRP PIPE AND FITTINGS SHALL BE 75 PSI MIN. PRESSURE RATING.
5. ALL FLANGES FURNISHED BY SUPPLIER SHALL MEET OUTSIDE DIAMETER, BOLT CIRCLE DIAMETER, NUMBER AND SIZE OF HOLES PER ANSI B.16.1 125 LB. CAST IRON, AND ANSI B16.5 150 LB. STEEL FLANGE SPECIFICATIONS.
6. GASKETS PROVIDED BY SUPPLIER SHALL BE 3/16" THICK, FULL FACE BUNA-N RUBBER, WITH A DUROMETER HARDNESS OF 40-50.
7. COORDINATE DECANTER REST ELEVATION W/SUPPLIER.
8. COORDINATE SBR INTERNAL COMPONENTS WITH SUPPLIER TO ESTABLISH SCOPE OF SUPPLY AND VENDER/CONTRACTOR RESPONSIBILITIES.

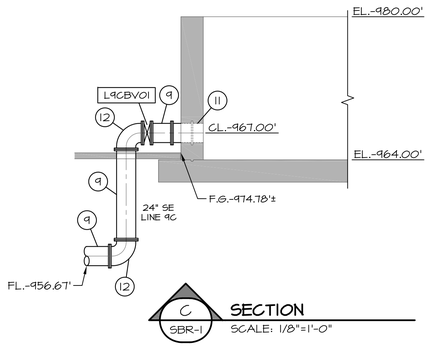

C SBR-1 **SECTION**
SCALE: 1/8"=1'-0"

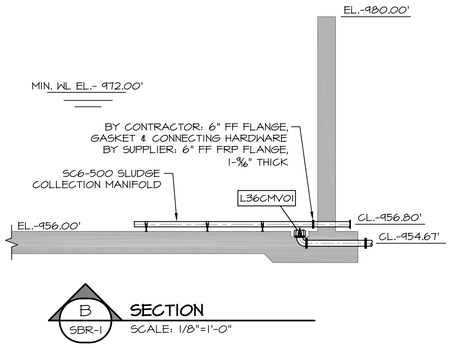

B SBR-1 **SECTION**
SCALE: 1/8"=1'-0"

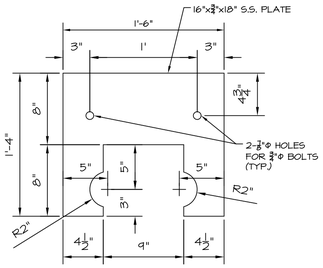

PIPE GUIDE PLATE
SCALE: 1-1/2""=1'-0"

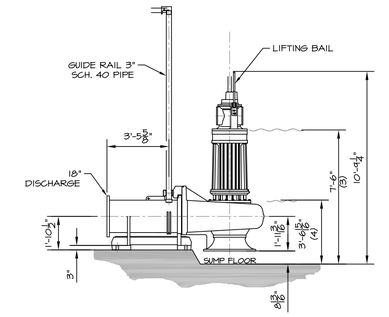

MOTIVE PUMP DETAIL
SCALE: 1/4"=1'-0"

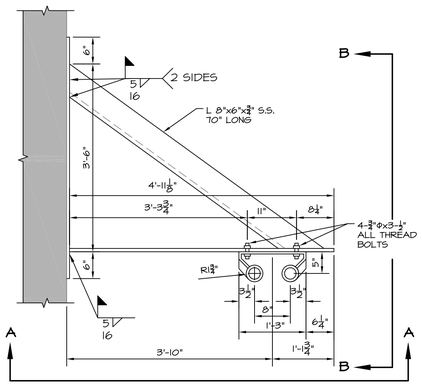

TOP PUMP GUIDE RAIL BRACKET
SCALE: 3/4"=1'-0"

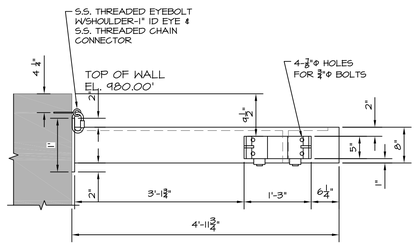

SECTION A-A
SCALE: 3/4"=1'-0"

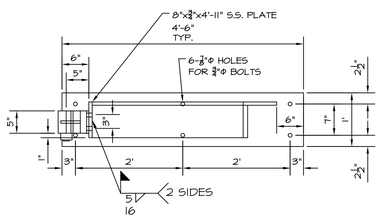

SECTION B-B
SCALE: 3/4"=1'-0"

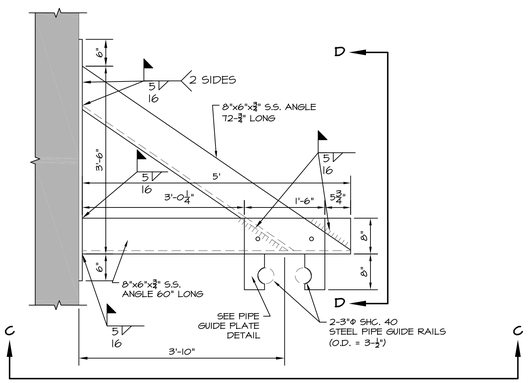

PUMP GUIDE RAIL BRACKET
SCALE: 3/4"=1'-0"

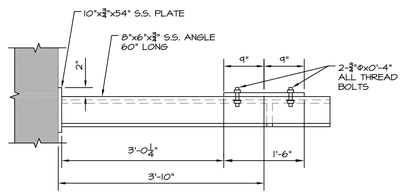

SECTION C-C
SCALE: 3/4"=1'-0"

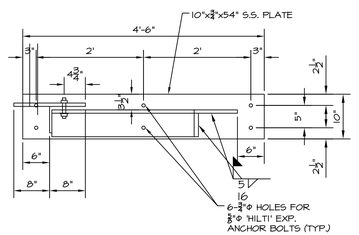

SECTION D-D
SCALE: 3/4"=1'-0"

WALL ENGINEERING
223 N. WASHINGTON AVE., DURANT, OK 74701
OKLAHOMA CA #5413 EXP. JUNE 30, 2023

REGISTERED PROFESSIONAL ENGINEER
17272
BRANDON WALL
21108
OKLAHOMA

SUBMITTAL / REVISIONS:

DATE	BY	SUBMITTAL / REVISION
03/22	JR	ODEQ SUBMITTAL
05/22	JR	REVISED PER ODEQ COMMENT
06/22	JR	ISSUED FOR BIDDING
07/22	JR	REVISED PER ADDENDUM NO. 1

SHAWNEE MUNICIPAL AUTHORITY
WASTEWATER SYSTEM IMPROVEMENTS
CONTRACT DOCUMENTS VOL. 4 OF 6 - NORTHSIDE WWTP

SEQUENCING BATCH REACTOR
SECTION VIEWS AND DETAILS

PROJECT NO.
SHN-20-01
DATE
06/22
DRAWN BY:
JR
CHECKED BY:
BW
REVIEWED BY:
DBW
SCALE:
1/16"=1'-0"

BAR IS ONE INCH ON ORIGINAL DRAWING
0" 1"
IF NOT ONE INCH ON THIS SHEET, ADJUST SCALES ACCORDINGLY

SHEET
SBR-2

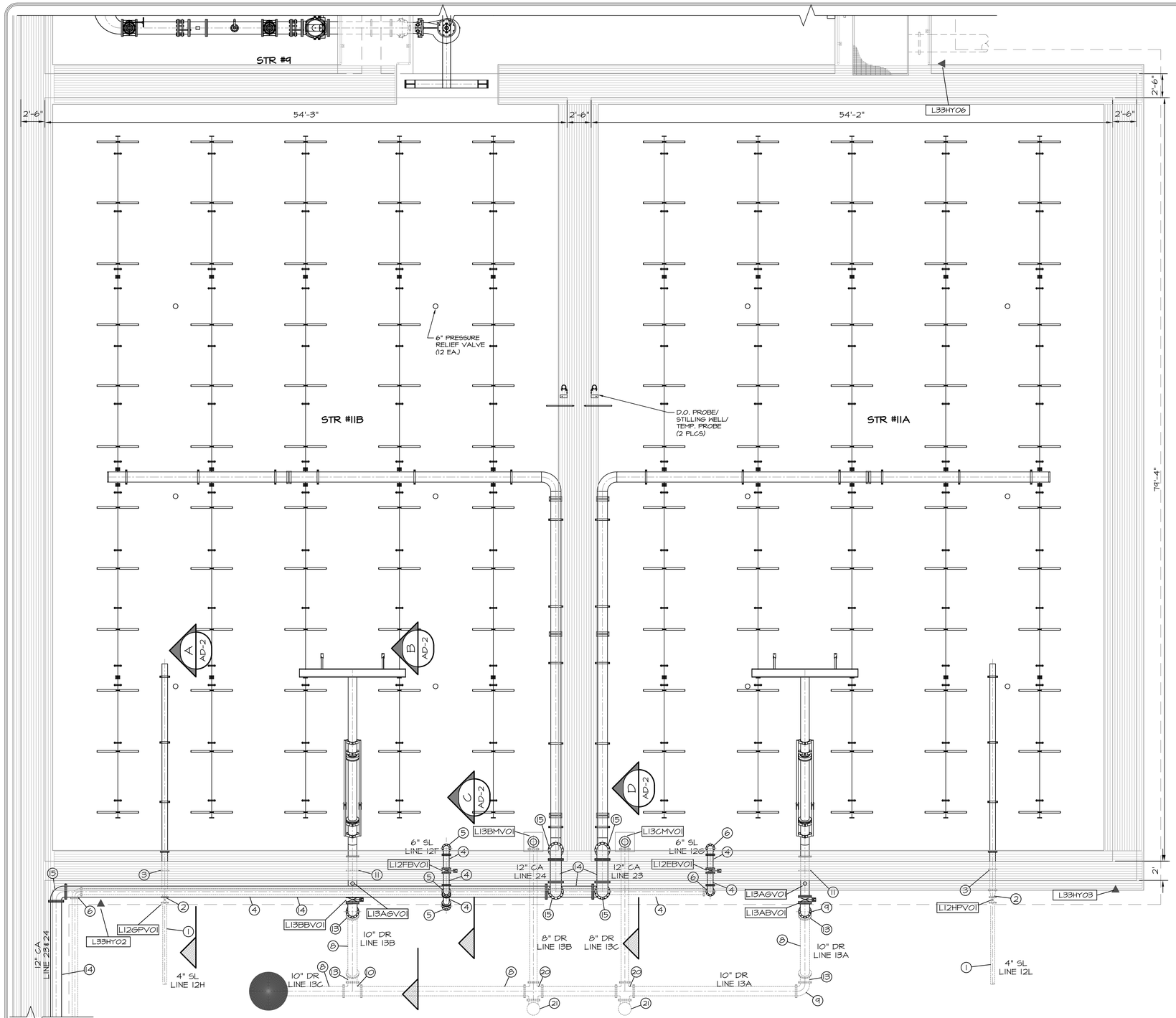

HANDRAIL/WALKWAY NOTES:

1. COMPLETE HANDRAIL SYSTEM (INCLUDING STAIRS AND PUMP MAINTENANCE PLATFORM) TO BE FURNISHED AS A SYSTEM (INCLUDING PRE-EQ BASIN) FROM A SINGLE SUPPLIER. COMPLETE SYSTEM TO BE STAMPED BY AND OKLAHOMA STRUCTURAL ENGINEER (S.E.).
2. HANDRAIL/WALKWAY SUPPLIER TO COORDINATE STAIRS/STEPS OF ADEQUATE CLEARANCE FOR LOCATIONS WHERE AIR/SLUDGE/MISC. PIPING EXTENDS OVER TOP OF WALL. SUBMITTAL REQUIRED.

NOTES:

1. ALL COMPONENTS SHALL BE DUCTILE IRON OR STAINLESS STEEL.
2. ALL ELECTRONICALLY ACTUATED VALVES TO ALSO BE EQUIPPED WITH HAND WHEEL OPERATORS.
3. PIPE SUPPORT LOCATIONS ARE FOR REFERENCE ONLY & MORE MAY BE REQUIRED PER SPECIFICATION REQUIREMENTS AND/OR INDUSTRY STANDARD.
4. ALL AERATION COMPONENTS INTERNAL TO BASINS TO BE STAINLESS STEEL. SYSTEM TO BE DESIGNED AND FURNISHED BY SUPPLIER. COORDINATE WITH SUPPLIER FOR INSTALLATION DETAILS AND CONSTRUCTION INFORMATION.
5. MUD VALVES SHALL BE FURNISHED WITH STEM, WALL ANCHORS, AND HANDWHEEL OPERATOR IN A COMPLETE SYSTEM FOR WALL MOUNTING WITH WHEEL OPERATOR AT WALKWAY LEVEL. SUBMITTAL REQUIRED.
6. GLOBE VALVES TO BE USED TO FILL SBR DECANTER TO RELEASE AIR.
7. AIR PIPING TO BE SUPPORTED TO PREVENT SLIPPAGE AND TO BE LOOSELY ATTACHED TO ALLOW PIPE MOVEMENT.

VALVE SCHEDULE - STRUCTURE #11A & #11B

VALVE I.D.	VALVE TYPE	VALVE SIZE	MOTORIZED
L12EBV01	BUTTERFLY	6"	YES
L12FBV01	BUTTERFLY	6"	YES
L12GPV01	PLUG	4"	YES
L12HPV01	PLUG	4"	YES
L13ABV01	PLUG	10"	YES
L13AGV01	GLOBE	¾"	NO
L13BBV01	PLUG	10"	YES
L13BGV01	GLOBE	¾"	NO
L13BMV01	MUD	8"	NO
L13CMV01	MUD	8"	NO

PIPING SCHEDULE STRUCTURE #11A & #11B

NO.	ITEM	DESCRIPTION/NOTES
1	4" D.I. SPOOL	
2	4"x6" D.I. ECCENTRIC REDUCER, MJxMJ	ECCENTRIC
3	6" D.I. WALL PIPE, MJxPE	WITH THRUST COLLAR
4	6" D.I. SPOOL, FLxFL	MJ UNDERGROUND
5	6" D.I. 45° BEND, FLxFL	
6	6" D.I. 90° BEND, FLxFL	MJ UNDERGROUND
7	6" D.I. TEE, FLxFL	MJ UNDERGROUND
8	10" D.I. SPOOL	
9	10" D.I. 90° BEND, MJxMJ	
10	10" D.I. TEE, MJxMJ	
11	10" D.I. WALL PIPE, FLxPE	WITH THRUST COLLAR
12	10" D.I. SPOOL	
13	10" D.I. 45° BEND, MJxMJ	
14	12" D.I. SPOOL, GRxGR	SEE NOTE 6 (SBR-3)
15	12" D.I. 90° BEND, GRxGR	SEE NOTE 6 (SBR-3)
16	12" EXPANSION JOINT	BY VICTAULIC
17	ADJUSTABLE PIPE SUPPORT/STAND	
18	CONCRETE CRADLE PIPE SUPPORT	
19	12" SST DROP PIPE	COORDINATE WITH SUPPLIER
20	10x10x10x8" D.I. CROSS, FLxFL	
21	CLEANOUT	SEE DETAIL SHEETS

REGISTERED PROFESSIONAL ENGINEER
BRANDON WALL
21108
OKLAHOMA
12/31/2023

WALL ENGINEERING
223 N. WASHINGTON AVE., DURANT, OK 74701
OKLAHOMA CA #5413 EXP. JUNE 30, 2023

SUBMITTAL / REVISIONS:

DATE	BY	SUBMITTAL / REVISION
03/22	JR	ODEQ SUBMITTAL
05/22	JR	REVISED PER ODEQ COMMENT
06/22	JR	ISSUED FOR BIDDING
07/22	JR	REVISED PER ADDENDUM NO. 1

SHAWNEE MUNICIPAL AUTHORITY
WASTEWATER SYSTEM IMPROVEMENTS - NORTHSIDE WWTP
CONTRACT DOCUMENTS VOL. 4 OF 6

AEROBIC DIGESTER
PLAN VIEW AND SCHEDULES

PROJECT NO. SHN-20-01
DATE 06/22
DRAWN BY: JR
CHECKED BY: BW
REVIEWED BY: DBW
SCALE: 3/16"=1'-0"

BAR IS ONE INCH ON ORIGINAL DRAWING
0" 1"
IF NOT ONE INCH ON THIS SHEET, ADJUST SCALES ACCORDINGLY

SHEET
AD-1

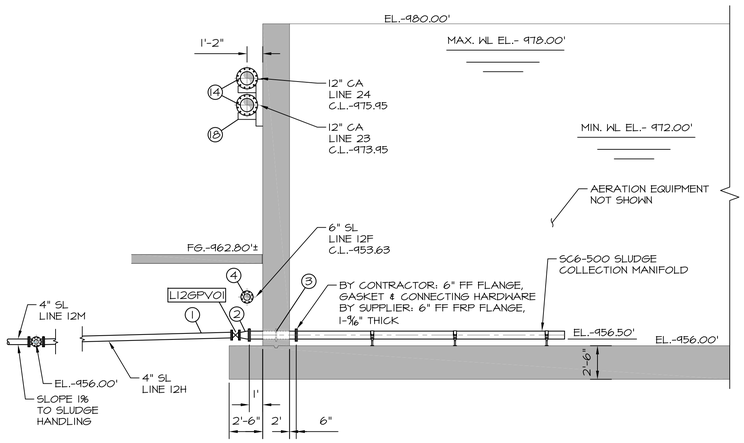

A AD-1 **SECTION**
SCALE: 3/16"=1'-0"

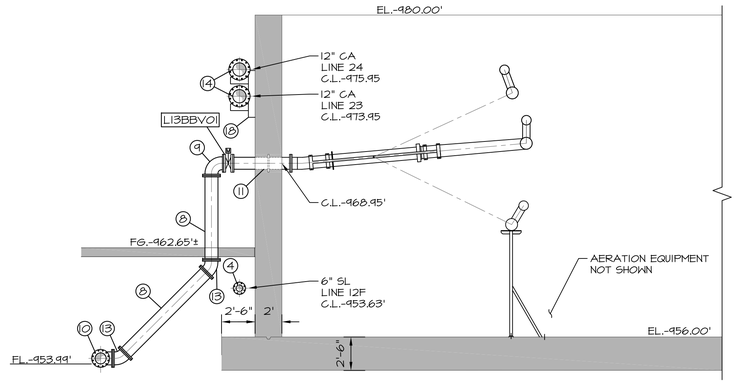

B AD-1 **SECTION**
SCALE: 3/16"=1'-0"

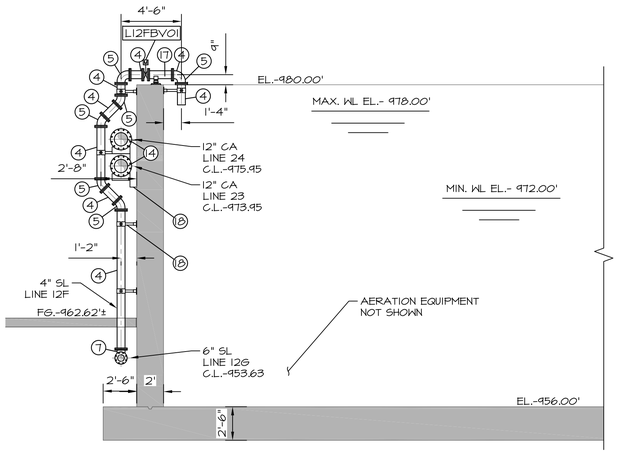

C AD-1 **SECTION**
SCALE: 3/16"=1'-0"

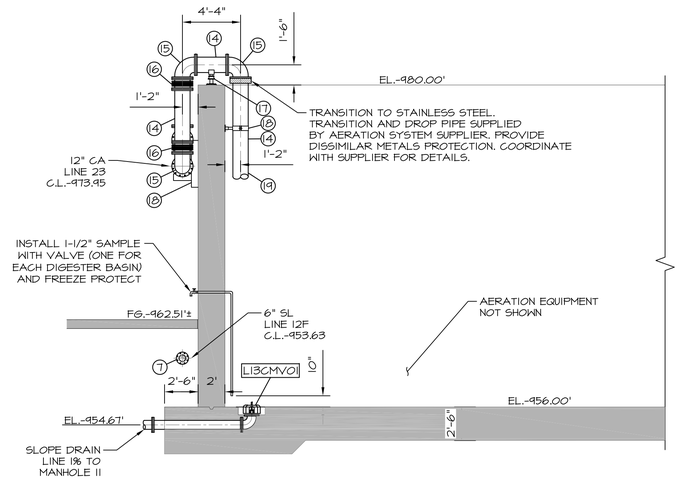

D AD-1 **SECTION**
SCALE: 3/16"=1'-0"

NOTES:

1. CONTRACTOR NEEDS TO PROVIDE A ¾" NIPPLE AND GLOBE VALVE BETWEEN OUTSIDE OF DECANTER SPOOL PENETRATION AND EFFLUENT CONTROL VALVE TO SERVE AS A FILL PORT TO SINK DECANTER AT START-UP.
2. DECANTER OUTLET PIPING MUST BE DESIGNED WITH A SUBMERGED OUTLET OR TRAPS TO PREVENT AIR FROM ENTERING THE DECANTER.
3. ALL PIPE ELEVATIONS SHOWN ARE CENTER OF PIPE UNLESS OTHERWISE INDICATED.
4. ALL FRP PIPE AND FITTINGS SHALL BE 75 PSI MIN. PRESSURE RATING.
5. ALL FLANGES FURNISHED BY SUPPLIER SHALL MEET OUTSIDE DIAMETER, BOLT CIRCLE DIAMETER, NUMBER AND SIZE OF HOLES PER ANSI B.16.1 125 LB. CAST IRON, AND ANSI B16.5 150 LB. STEEL FLANGE SPECIFICATIONS.
6. GASKETS PROVIDED BY SUPPLIER SHALL BE 3/16" THICK, FULL FACE BUNA-N RUBBER, WITH A DUROMETER HARDNESS OF 40-50 ON THE SHORE-A SCALE.

NOTES:

1. ALL COMPONENTS SHALL BE DUCTILE IRON OR STAINLESS STEEL.
2. ALL ELECTRONICALLY ACTUATED VALVES TO ALSO BE EQUIPPED WITH HAND WHEEL OPERATORS.
3. PIPE SUPPORT LOCATIONS ARE FOR REFERENCE ONLY & MORE MAY BE REQUIRED PER SPECIFICATION REQUIREMENTS AND/OR INDUSTRY STANDARD.
4. ALL AERATION COMPONENTS INTERNAL TO BASINS TO BE STAINLESS STEEL. SYSTEM TO BE DESIGNED AND FURNISHED BY SUPPLIER. COORDINATE WITH SUPPLIER FOR INSTALLATION DETAILS AND CONSTRUCTION INFORMATION.
5. MUD VALVES SHALL BE FURNISHED WITH STEM, WALL ANCHORS, AND HANDWHEEL OPERATOR IN A COMPLETE SYSTEM FOR WALL MOUNTING WITH WHEEL OPERATOR AT WALKWAY LEVEL. SUBMITTAL REQUIRED.
6. GLOBE VALVES TO BE USED TO FILL SBR DECANTER TO RELEASE AIR.
7. AIR PIPING TO BE SUPPORTED TO PREVENT SLIPPAGE AND TO BE LOOSELY ATTACHED TO ALLOW PIPE MOVEMENT.

VALVE SCHEDULE - STRUCTURE #11A & #11B

VALVE I.D.	VALVE TYPE	VALVE SIZE	MOTORIZED
L12EBVO1	BUTTERFLY	6"	YES
L12FBVO1	BUTTERFLY	6"	YES
L12GPVO1	PLUG	4"	YES
L12HPVO1	PLUG	4"	YES
L13ABVO1	PLUG	10"	YES
L13AGVO1	GLOBE	¾"	NO
L13BBVO1	PLUG	10"	YES
L13BGVO1	GLOBE	¾"	NO
L13BMVO1	MUD	8"	NO
L13CMVO1	MUD	8"	NO

PIPING SCHEDULE STRUCTURE #11A & #11B

NO.	ITEM	DESCRIPTION/NOTES
1	4" D.I. SPOOL	
2	4"x6" D.I. ECCENTRIC REDUCER, M.JxM.J	ECCENTRIC
3	6" D.I. WALL PIPE, M.JxPE	WITH THRUST COLLAR
4	6" D.I. SPOOL, FLxFL	M.J UNDERGROUND
5	6" D.I. 45° BEND, FLxFL	
6	6" D.I. 90° BEND, FLxFL	M.J UNDERGROUND
7	6" D.I. TEE, FLxFL	M.J UNDERGROUND
8	10" D.I. SPOOL	
9	10" D.I. 90° BEND, M.JxM.J	
10	10" D.I. TEE, M.JxM.J	
11	10" D.I. WALL PIPE, FLxPE	WITH THRUST COLLAR
12	10" D.I. SPOOL	
13	10" D.I. 45° BEND, M.JxM.J	
14	12" D.I. SPOOL, GRxGR	SEE NOTE 6 (SBR-3)
15	12" D.I. 90° BEND, GRxGR	SEE NOTE 6 (SBR-3)
16	12" EXPANSION JOINT	BY VICTAULIC
17	ADJUSTABLE PIPE SUPPORT/STAND	
18	CONCRETE CRADLE PIPE SUPPORT	
19	12" SST DROP PIPE	COORDINATE WITH SUPPLIER
20	10x10x10x8" D.I. CROSS, FLxFL	
21	CLEANOUT	SEE DETAIL SHEETS



WALL ENGINEERING
223 N. WASHINGTON AVE. DURANT, OK 74701
OKLAHOMA CA #5413 EXP. JUNE 30, 2023

SUBMITTAL / REVISIONS:

DATE	BY	SUBMITTAL / REVISION
03/22	JR	ODEQ SUBMITTAL
05/22	JR	REVISED PER ODEQ COMMENT
06/22	JR	ISSUED FOR BIDDING
07/22	JR	REVISED PER ADDENDUM NO. 1

SHAWNEE MUNICIPAL AUTHORITY
WASTEWATER SYSTEM IMPROVEMENTS
CONTRACT DOCUMENTS VOL. 4 OF 6 - NORTHSIDE WWTP

AEROBIC DIGESTER
SECTION VIEWS AND SCHEDULES

PROJECT NO.
SHN-20-01
DATE
06/22
DRAWN BY:
JR
CHECKED BY:
BW
REVIEWED BY:
DBW
SCALE:
3/16"=1'-0"

BAR IS ONE INCH ON ORIGINAL DRAWING
0" 1"
IF NOT ONE INCH ON THIS SHEET, ADJUST SCALES ACCORDINGLY

SHEET
AD-2

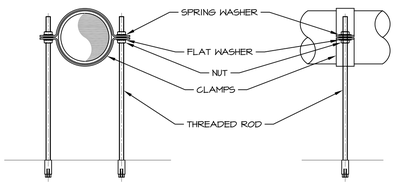

SUPPORTS DETAILS
SCALE: NOT TO SCALE

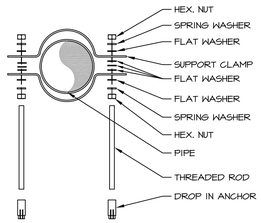

GUIDE SUPPORT EXPLODED VIEW
SCALE: NOT TO SCALE

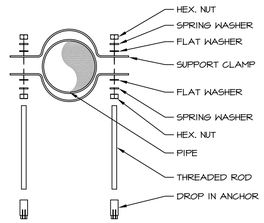

FIXED SUPPORT EXPLODED VIEW
SCALE: NOT TO SCALE

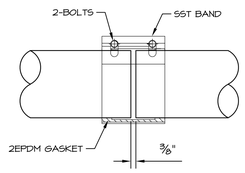

SST COUPLING DETAILS
SCALE: NOT TO SCALE

NOTES:
1. GUIDE SUPPORTS WITH 3 EXTRA WASHERS PLACE BETWEEN THE CLAMPS SO THAT THERE IS GAP BETWEEN THE O.D. OF THE PIPE AND I.D. OF THE CLAMP FOR PIPE EXPANSION.
2. FIXED SUPPORTS ARE WITH CLAMPS (STRAPS) GRIPPED TIGHT TO THE O.D. OF THE PIPE WHICH DO NOT ALLOW PIPE FOR EXPANSION.

NOTES:
1. ALL COMPONENTS SHALL BE DUCTILE IRON OR STAINLESS STEEL.
2. ALL ELECTRONICALLY ACTUATED VALVES TO ALSO BE EQUIPPED WITH HAND WHEEL OPERATORS.
3. PIPE SUPPORT LOCATIONS ARE FOR REFERENCE ONLY & MORE MAY BE REQUIRED PER SPECIFICATION REQUIREMENTS AND/OR INDUSTRY STANDARD.
4. ALL AERATION COMPONENTS INTERNAL TO BASINS TO BE STAINLESS STEEL. SYSTEM TO BE DESIGNED AND FURNISHED BY SUPPLIER. COORDINATE WITH SUPPLIER FOR INSTALLATION DETAILS AND CONSTRUCTION INFORMATION.
5. MUD VALVES SHALL BE FURNISHED WITH STEM, WALL ANCHORS, AND HANDWHEEL OPERATOR IN A COMPLETE SYSTEM FOR WALL MOUNTING WITH WHEEL OPERATOR AT WALKWAY LEVEL. SUBMITTAL REQUIRED.
6. GLOBE VALVES TO BE USED TO FILL SBR DECANTER TO RELEASE AIR.
7. AIR PIPING TO BE SUPPORTED TO PREVENT SLIPPAGE AND TO BE LOOSELY ATTACHED TO ALLOW PIPE MOVEMENT.

VALVE SCHEDULE - STRUCTURE #11A & #11B

VALVE I.D.	VALVE TYPE	VALVE SIZE	MOTORIZED
L12EBV01	BUTTERFLY	6"	YES
L12FBV01	BUTTERFLY	6"	YES
L12GPV01	PLUG	4"	YES
L12HPV01	PLUG	4"	YES
L13ABV01	PLUG	10"	YES
L13AGV01	GLOBE	¾"	NO
L13BBV01	PLUG	10"	YES
L13BGV01	GLOBE	¾"	NO
L13BMV01	MUD	8"	NO
L13CMV01	MUD	8"	NO

PIPING SCHEDULE STRUCTURE #11A & #11B

NO.	ITEM	DESCRIPTION/NOTES
1	4" D.I. SPOOL	
2	4"x6" D.I. ECCENTRIC REDUCER, M.JxM.J	ECCENTRIC
3	6" D.I. WALL PIPE, M.JxPE	WITH THRUST COLLAR
4	6" D.I. SPOOL, FLxFL	M.J UNDERGROUND
5	6" D.I. 45° BEND, FLxFL	
6	6" D.I. 90° BEND, FLxFL	M.J UNDERGROUND
7	6" D.I. TEE, FLxFL	M.J UNDERGROUND
8	10" D.I. SPOOL	
9	10" D.I. 90° BEND, M.JxM.J	
10	10" D.I. TEE, M.JxM.J	
11	10" D.I. WALL PIPE, FLxPE	WITH THRUST COLLAR
12	10" D.I. SPOOL	
13	10" D.I. 45° BEND, M.JxM.J	
14	12" D.I. SPOOL, GRxGR	SEE NOTE 6 (SBR-3)
15	12" D.I. 90° BEND, GRxGR	SEE NOTE 6 (SBR-3)
16	12" EXPANSION JOINT	BY VICTAULIC
17	ADJUSTABLE PIPE SUPPORT/STAND	
18	CONCRETE CRADLE PIPE SUPPORT	
19	12" SST DROP PIPE	COORDINATE WITH SUPPLIER
20	10x10x10x8" D.I. CROSS, FLxFL	
21	CLEANOUT	SEE DETAIL SHEETS

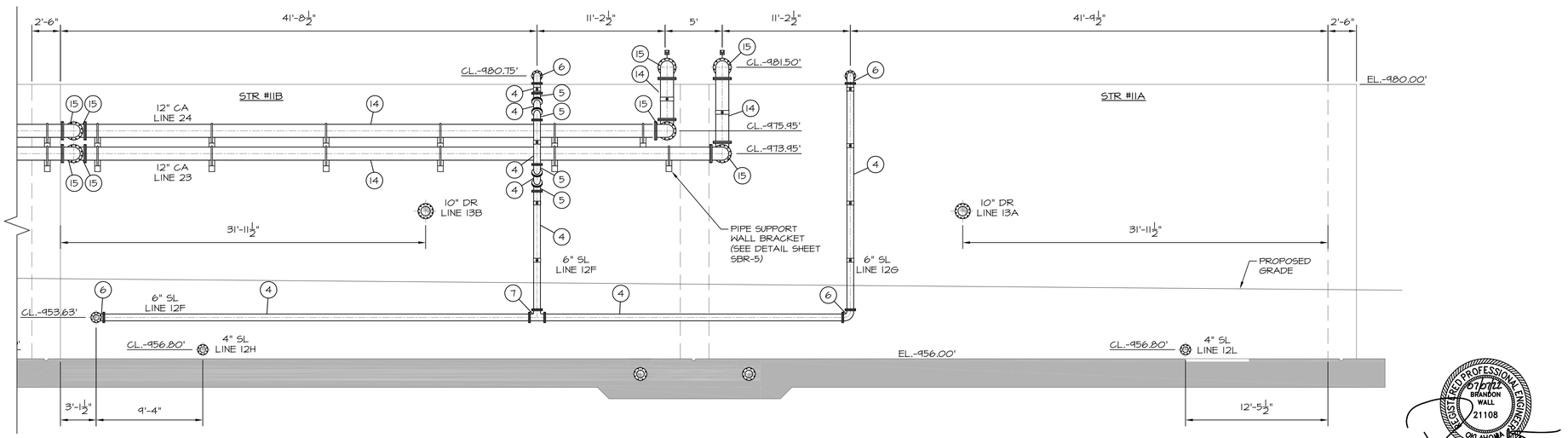

SOUTH ELEVATION VIEW
SCALE: 3/16"=1'-0"

WALL ENGINEERING
223 N. WASHINGTON AVE. DURANT, OK 74701
OKLAHOMA CA #5413 EXP. JUNE 30, 2023

SUBMITTAL / REVISIONS:

DATE	BY	SUBMITTAL / REVISION
03/22	JR	ODEQ SUBMITTAL
06/22	JR	ISSUED FOR BIDDING
07/22	JR	REVISED PER ADDENDUM NO. 1

SHAWNEE MUNICIPAL AUTHORITY
WASTEWATER SYSTEM IMPROVEMENTS
CONTRACT DOCUMENTS VOL. 4 OF 6 - NORTHSIDE WWTP

AEROBIC DIGESTER
ELEVATION VIEW, SCHEDULES

PROJECT NO.
SHN-20-01
DATE
06/22
DRAWN BY:
JR
CHECKED BY:
BW
REVIEWED BY:
DBW
SCALE:
3/16"=1'-0"

BAR IS ONE INCH ON ORIGINAL DRAWING
0" 1"
IF NOT ONE INCH ON THIS SHEET, ADJUST SCALES ACCORDINGLY

SHEET
AD-3

PIPING AND EQUIPMENT SCHEDULE - STRUCTURES #15 & #16

NO.	ITEM	DESCRIPTION / NOTES
1	NOT USED	SEE NOTE 2
2	6" D.I. SPOOL	SEE NOTE 2
3	6" D.I. 90° BEND	SEE NOTE 2
4	6" D.I. WALL PIPE	WITH THRUST COLLAR, SEE NOTE 2
5	6" D.I. DISMANTLING JOINT	SEE NOTE 2
6	6" D.I. TEE	SEE NOTE 2
7	6" D.I. SPOOL	SEE NOTE 2
8	24" D.I. WALL PIPE, FLxPE	WITH THRUST COLLAR
9	48" D.I. WALL PIPE, FLxPE	WITH THRUST COLLAR
10	U.V. LAMP MODULES W/BANK FRAME	TROJAN SIGNA
11	LEVEL CONTROL WEIR (BY U.V. SUPPLIER)	
12	POWER DISTRIBUTION CENTER (1)	
13	HYDRAULIC SYSTEM CENTER (1)	
14	SYSTEM CONTROL CENTER (1)	
15	LOW LEVEL SENSOR (1)	
16	LEVEL SENSOR CONTROL (1)	
17	6" FLANGED GLOBE CHECK VALVE	
18	6" FLANGED BUTTERFLY VALVE	
19	6" FLANGED PLUG VALVE W/ADJUSTABLE VALVE BOX	VALVE BOX CAP TO BE FLUSH WITH FLOOR
20	1" AIR RELEASE VALVE	ROUTE DISCHARGE IN PVC TO GRATING
21	6" BASKET STRAINER (SEE NOTES THIS SHEET)	EATON MODEL 72 OR EQUAL
22	ADJUSTABLE PIPE SUPPORTS	
23	WALL MOUNTED UTILITY STATION	

(1)- CONTRACTOR TO FURNISH SUBMITTAL DRAWING WITH EXACT LOCATION & LAYOUT INCLUDING WIRE ROUTING. INSTALLATION SHALL BE PER MANUFACTURERS REQUIREMENTS.
(2)-ALL ABOVE GROUND NON POTABLE WATER PIPING TO BE GROOVED END AND DESIGNED AND FURNISHED AS A SYSTEM BY VICTAULIC.

316L SS GATE SCHEDULE STRUCTURE #15 & #16

GATE IDENTIFICATION	15SL01	15SL02	15SL03	15SL04	15SL05	15SL06
GATE TYPE	SLUICE	SLUICE	SLUICE	SLUICE	SLUICE	SLUICE
GATE SIZE	2'-11¼" X 72"	2'-11¼" X 72"	4'-6" X 72"	24"Φ	24"Φ	24"Φ
GATE SERIES	924	924	924	924	924	924
MOUNTING - FRAME	CH / FE	CH	CH	CH	CH	CH
MOUNTING - INVERT	WALL	EMBEDED	EMBEDED	WALL	WALL	WALL
A. MANUAL	HW	HW	HW	HW	HW	HW
B. ELECTRIC*	YES	YES	YES	YES	YES	YES
C. STEM COVER	L	L	L	L	L	L
D. POSITION COVER	MYLAR	MYLAR	MYLAR	MYLAR	MYLAR	MYLAR
E. STEM CONFIGURATION	RISING	RISING	RISING	RISING	RISING	RISING
LIFT MOUNTING	YOKE	YOKE	YOKE	YOKE	YOKE	YOKE
LEAKAGE STANDARD	AWWA	AWWA	AWWA	AWWA	AWWA	AWWA
OPERATING FLOOR ELEV.	965.25'	965.25'	965.25'	965.25'	965.25'	965.25'
INVERT ELEV.	956.33'	951.33'	951.33'	951.33	951.33	951.33

1. ALL GATES ARE UPWARD OPENING UNLESS OTHERWISE SPECIFIED.
2. ELECTRICALLY OPERATED GATE: 460 VOLTS/3 PHASE.
3. SEE HW-5 FOR GATE DETAIL AND COORDINATE W/MANUFACTURER FOR ADDITIONAL INFORMATION.

NON-POTABLE WATER PUMP SCHEDULE - STRUCTURE #16

NO.	FLOW	TDH-DES	FUNCTION	CONTROL	HP
16P101-16P102	400 GPM	235'	PRIMARY	VFD	±40

PUMP NOTES:

1. PUMP SHALL BE GORMAN RUPP T3AS-E5 SELF PRIMING PUMP.
2. 4" SIMPLEX STRAINER SHALL BE EATON MODEL 72 OR APPROVED EQUAL AND SHALL HAVE PIPE SUPPORTS UNDER THE PROCESS PIPING NEAR THE INLET AND OUTLET CONNECTIONS (SEE PIPE SUPPORT DETAIL SHEET DT-03).
3. STRAINER DRAIN SHALL BE FIELD ROUTED INTO BASIN THROUGH APPROPRIATELY SIZED SCH. 80 PVC CONDUIT PER MANUFACTURES REQUIREMENTS.
4. GRATING OVER UV CHANNELS SHALL BE SIZED TO BE EASILY REMOVED BY ONE PERSON.
5. INVERT MOUNTING PER GATE MANUFACTURER REQUIREMENTS/RECOMMENDATIONS SUBMITTAL REQUIRED.
6. COORDINATE WITH PUMP SUPPLIER FOR CONCRETE PENETRATION REQUIREMENTS.

UV NOTES:

1. UV CHANNEL TO HAVE HIGH LEVEL ALARM.
2. SUBMIT WIRING PLAN TO ENGINEER FOR APPROVAL PRIOR TO STARTING WORK.
3. COORDINATE WITH UV SUPPLIER FOR EXACT WIRING AND EQUIPMENT REQUIREMENTS PRIOR TO BID.
4. EQUIPMENT LOCATION IS FOR REFERENCE ONLY. PROVIDE EQUIPMENT LAYOUT TO ENGINEER FOR APPROVAL PRIOR TO CONSTRUCTION.
5. DO NOT SLOPE CHANNEL FLOOR.
6. CHANNEL WIDTH MUST BE KEPT WITHIN A TOLERANCE OF ± 1-1/2" AT UV BANK FRAME AND ±¼" FOR REST OF CHANNEL.
7. ALL CHANNEL ELEVATIONS MUST BE KEPT WITHIN A TOLERANCE OF ± ¼".
8. REMOVABLE GRATING SECTIONS SHALL BE EASILY REMOVED BY ONE PERSON. MAXIMUM WEIGHT OF THE SECTIONS SHALL BE IN ACCORDANCE WITH REQUIREMENTS OF THE APPLICABLE JURISDICTION.
9. CONTRACTOR TO REVIEW ALL TROJAN TECHNOLOGIES INSTALLATION INSTRUCTIONS PRIOR TO EQUIPMENT INSTALLATION.
10. HYDRAULIC HOSE ELEVATIONS NOT TO EXCEED 12" ABOVE HSC MOUNTING ELEVATION.
11. SOLID GRATING REQUIRED TO BLOCK ULTRAVIOLET (UV) LIGHT. IN AREAS SPECIFIED.
12. COORDINATE EXACT DIMENSIONS WITH SUBMITTAL DRAWING.
13. HOUSE KEEPING PADS REQUIRED FOR ALL EQUIPMENT.
14. DURING NORMAL OPERATIONS IF HIGH LEVEL ALARM IS INDICATED, INFLUENT GATES SHOULD CLOSE AND/OR BYPASS GATES OPEN.

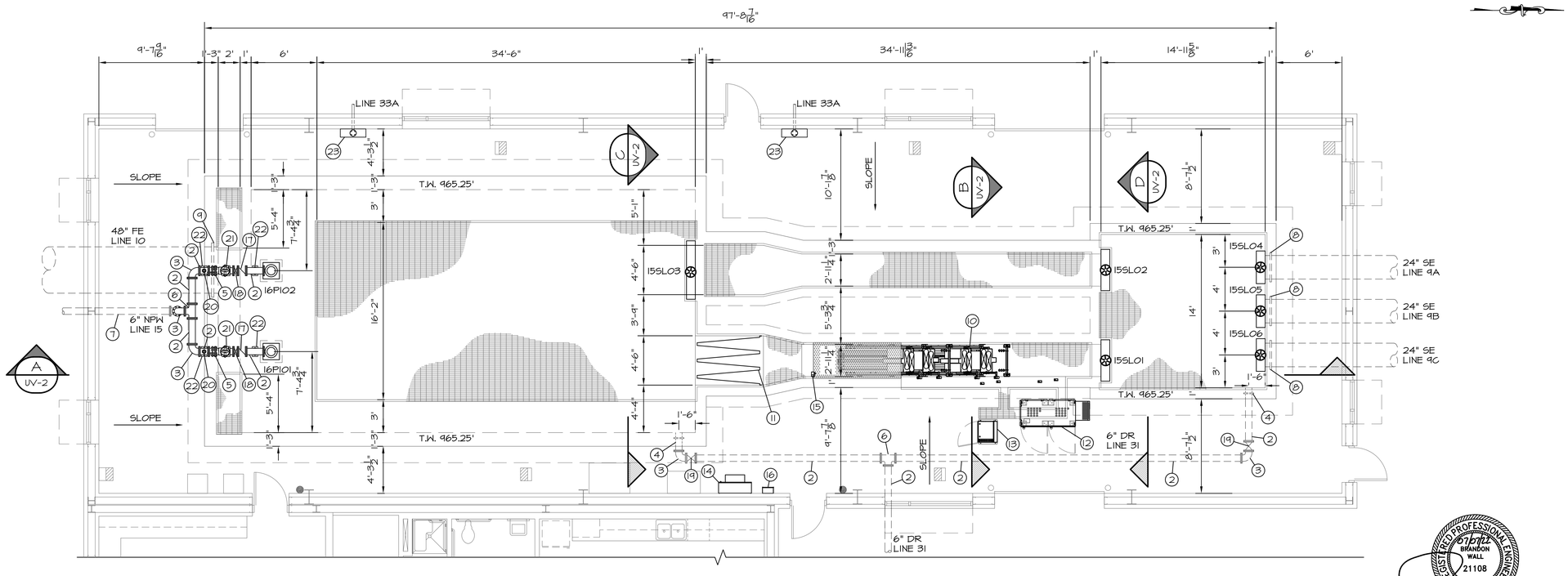

NOTE:
CONCRETE TO SLOPE CONTINUOUS FROM EXTERIOR FINISH FLOOR ELEVATION OF 965.33 TO TOP OF WALL ELEVATION OF 965.25 TO FACILITATE DRAINAGE.

REGISTERED PROFESSIONAL ENGINEER
07/07/22
BRANDON WALL
21108
OKLAHOMA

WALL ENGINEERING
223 N. WASHINGTON AVE. DURANT, OK 74701
OKLAHOMA CA #6413 EXP. JUNE 30, 2023

SUBMITTAL / REVISIONS:

DATE	BY	SUBMITTAL / REVISION
03/22	JR	60% SUBMITTAL
06/22	JR	ISSUED FOR BIDDING
07/22	JR	REVISED PER ADDENDUM NO. 1

SHAWNEE MUNICIPAL AUTHORITY
WASTEWATER SYSTEM IMPROVEMENTS
CONTRACT DOCUMENTS VOL. 4 OF 6 - NORTHSIDE WWTP

ULTRAVIOLET DISINFECTION SYSTEM
PLAN VIEW AND SCHEDULES

PROJECT NO.	SHN-20-01
DATE	06/22
DRAWN BY:	JR
CHECKED BY:	BW
REVIEWED BY:	DBW
SCALE:	3/16"=1'-0"

BAR IS ONE INCH ON ORIGINAL DRAWING
0" 1"
IF NOT ONE INCH ON THIS SHEET, ADJUST SCALES ACCORDINGLY

SHEET
UV-1

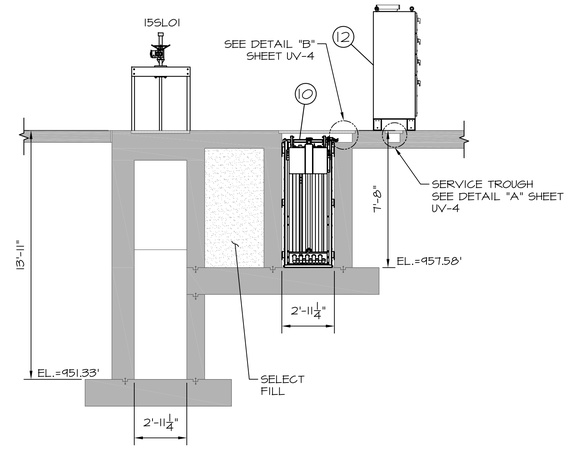

B UV-1 **SECTION**
SCALE: 1/4"=1'-0"

NOTE:
CABLE MANAGEMENT BRACKETS, LAMP CABLES, HYDRAULIC HOSES AND REMOVABLE GRATING NOT SHOWN FOR CLARITY.

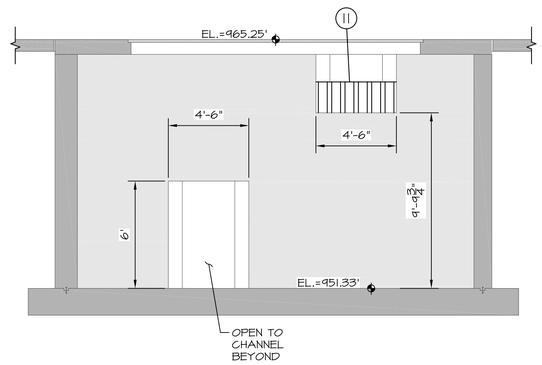

C UV-1 **SECTION**
SCALE: 1/4"=1'-0"

NOTE:
GATES NOT SHOWN FOR CLARITY.

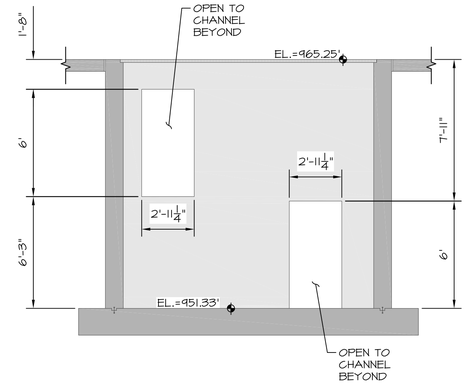

D UV-1 **SECTION**
SCALE: 1/4"=1'-0"

NOTE:
GATES NOT SHOWN FOR CLARITY.

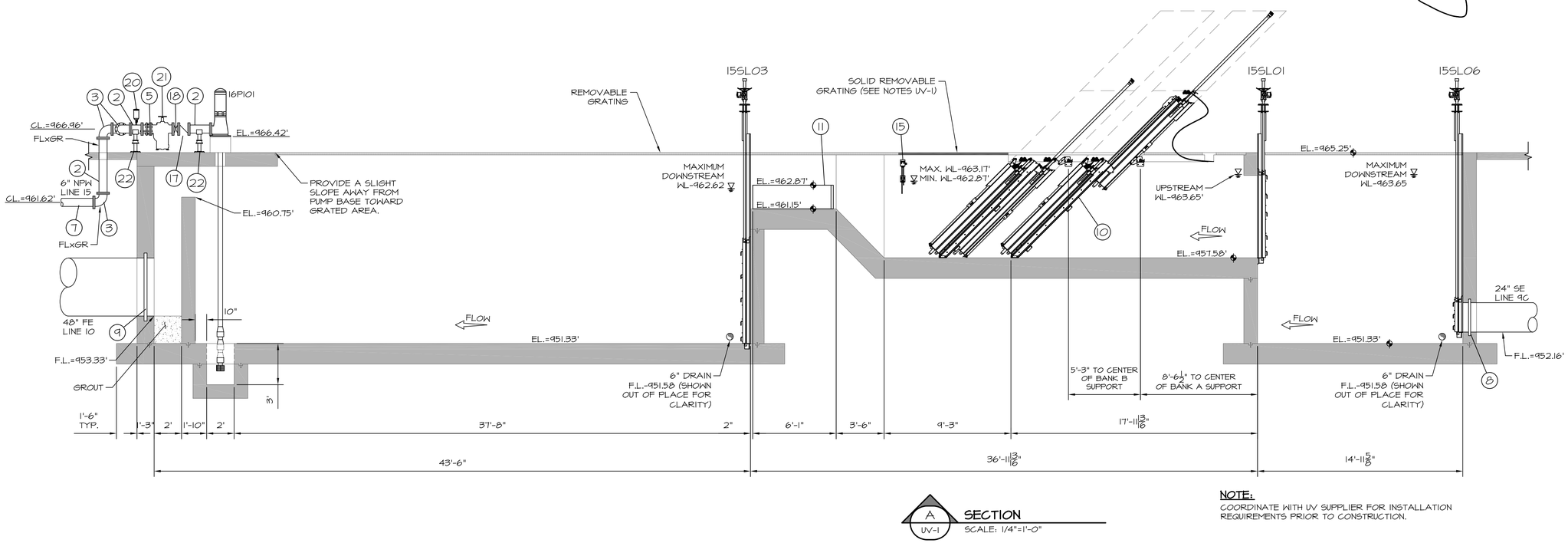

A UV-1 **SECTION**
SCALE: 1/4"=1'-0"

NOTE:
COORDINATE WITH UV SUPPLIER FOR INSTALLATION REQUIREMENTS PRIOR TO CONSTRUCTION.

WALL ENGINEERING
223 N. WASHINGTON AVE., DURANT, OK 74701
OKLAHOMA CA #5413 EXP. JUNE 30, 2023

SUBMITTAL / REVISIONS:

DATE	BY	SUBMITTAL / REVISION
03/22	JR	ODEQ SUBMITTAL
06/22	JR	ISSUED FOR BIDDING
07/22	JR	REVISED PER ADDENDUM NO. 1

SHAWNEE MUNICIPAL AUTHORITY
WASTEWATER SYSTEM IMPROVEMENTS
CONTRACT DOCUMENTS VOL. 4 OF 6 - NORTHSIDE WWTP

ULTRAVIOLET DISINFECTION SYSTEM
SECTION VIEWS

PROJECT NO.
SHN-20-01
DATE
06/22
DRAWN BY:
JR
CHECKED BY:
BW
REVIEWED BY:
DBW
SCALE:
1/4"=1'-0"

BAR IS ONE INCH ON ORIGINAL DRAWING
0" 1"
IF NOT ONE INCH ON THIS SHEET, ADJUST SCALES ACCORDINGLY

SHEET
UV-2

VALVE SCHEDULE STRUCTURE #24			
VALVE I.D.	VALVE TYPE	VALVE SIZE	MOTORIZED
L11AGV01	CHECK	14"	NA
L11APV01	PLUG	14"	YES
L11AAR01	COMBINATION AIR	2"	NA
L11BGV01	CHECK	14"	NA
L11BPV01	PLUG	14"	YES
L11BAR01	COMBINATION AIR	2"	NA
L11CGV01	CHECK	14"	NA
L11CPV01	PLUG	14"	YES
L11CAR01	COMBINATION AIR	2"	NA
L11DAV01	COMBINATION AIR	2"	NA
L11EPV01	PLUG	6"	NO
L11EPV02	PLUG	6"	NO

NOTES:
1. ROUTE AIR/VAC DRAWS TO FLOOR DRAIN IN PVC.
2. AIR RELEASE VALVES TO BE SUPPLIED WITH ISOLATION BALL VALVE & ½" SAMPLE COCK.

PIPING SCHEDULE STRUCTURE #24		
NO.	ITEM	DESCRIPTION/NOTES
1	14" D.I. SPOOL, FLxFL	
2	14" D.I. 90° BEND, FLxFL	WITH RESTRAINED GLAND
3	14" D.I. DISMANTLING JOINT, FLxFL	
4	14" WALL PIPE, FLxPE	WITH THRUST COLLAR
5	30"x30"x14" DI TEE, FLxFL	
6	30" D.I. SPOOL, FLxFL	
7	30" D.I. BLIND FLANGE, FL	
8	30" D.I. SPOOL, FLxPE	
9	6" D.I. WALL PIPE, PExMJ	WITH THRUST COLLAR
10	30" WALL PIPE, FLxMJ	WITH THRUST COLLAR
11	3" PVC CHECK VALVE	
12	3" SCH. 80 PVC	IN 4" D.I. WALL SLEEVE
13	3" SHC. 80 PVC 90° BEND	
14	FLOOR DRAIN	NEENAH MODEL R-4937-A
15	PIPE SUPPORT	
16	48" WALL PIPE, FLxMJ	
17	6" D.I. 90° BEND, MJxMJ	
18	PIPE SUPPORT	
19	6" D.I. SPOOL	

PUMP SCHEDULE STRUCTURE #24						
NO.	FLOW	TDH-DES	FUNCTION	CONTROL	HP	EFFICIENCY MIN.
24P101-24104	6000 GPM	30'	PRIMARY	VFD	75	77%

PUMP NOTES:
1. PUMPS SHALL PENTAIR OR APPROVED EQUAL.
2. PUMPS SHALL BE PROVIDED WITH BASE ELBOWS, S.S. RAILS, AND S.S. LIFTING CHAINS.
3. PROVIDE FITTINGS AS REQUIRED TO CONNECT BASE ELBOWS TO LIFT STATION PIPING.
4. EACH PUMP SHALL BE EQUIPPED WITH A VARIABLE FREQUENCY DRIVE.
5. HOLD CONDUIT TIGHT TO BOTTOM OF WET WELL SLAB. ONE CONDUIT FOR EACH POWER CABLE, ONE FOR FLOAT SWITCHES.
6. SEAL CONDUITS TO KEEP WET WELL GASSES OUT OF CONTROL PANEL.
7. LOCATED FLOATS AND CABLE HOLDER AWAY FROM INLET PIPE.
8. ALL COMPONENTS SUBJECT TO CONTACT WITH WASTEWATER SHALL BE DUCTILE IRON OR STAINLESS STEEL.
9. SEE SHEET HW-5 FOR GATE DETAIL.
10. PIPE SUPPORT LOCATIONS ARE FOR REFERENCE ONLY & MORE MAY BE REQUIRED PRE SPECIFICATIONS AND/OR INDUSTRY STANDARD.
11. WETWELL TO BE EQUIPPED WITH A LEVEL TRANSDUCER AND 3 BACKUP FLOATS (LOW LEVEL, ALARM, INFLUENT CLOSE).

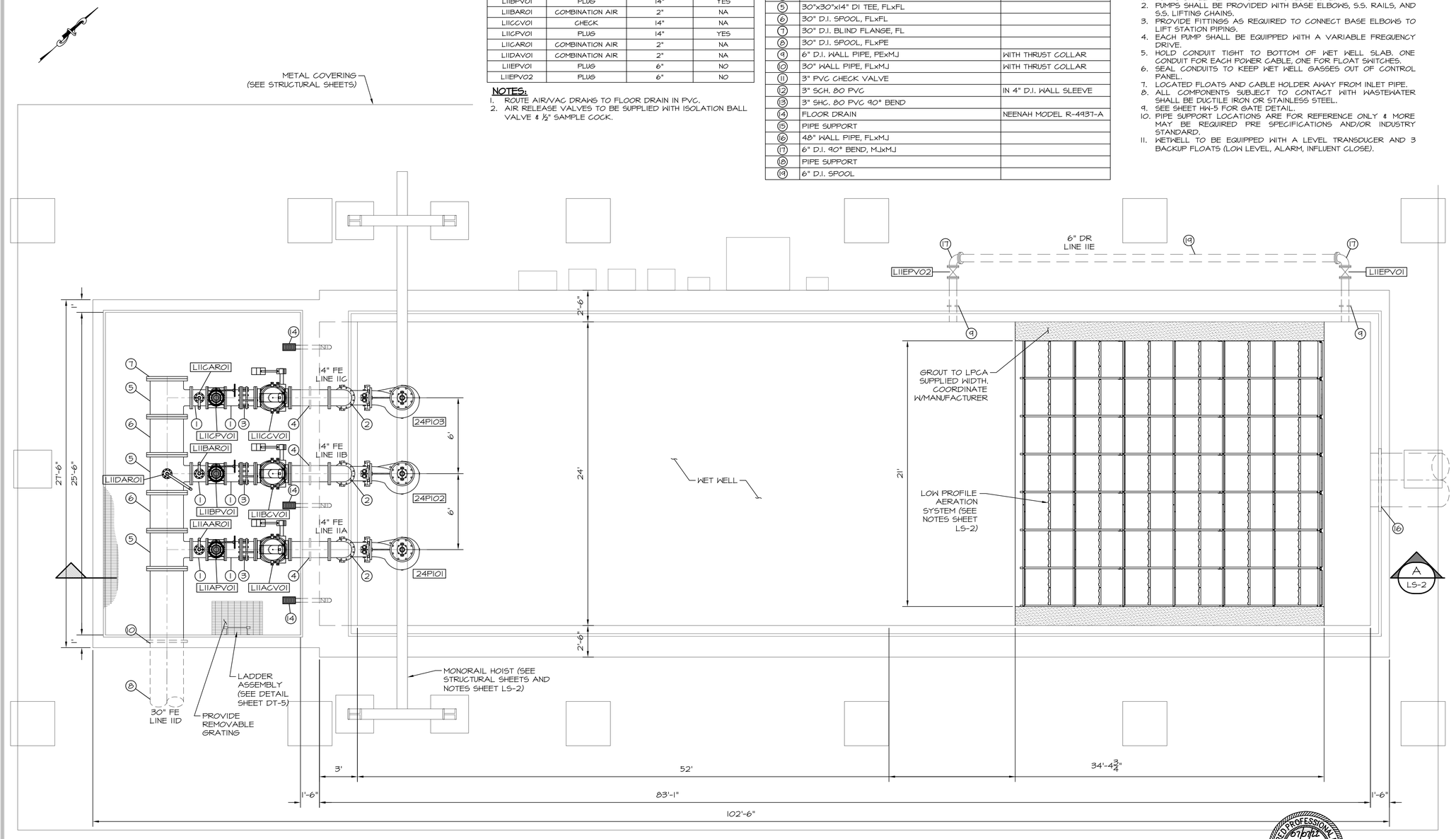

INFLUENT LIFT STATION PLAN VIEW

SCALE: 1/4"=1'-0"

REGISTERED PROFESSIONAL ENGINEER — 07/2023 — BRANDON WALL — 21108 — OKLAHOMA

WALL ENGINEERING
223 N. WASHINGTON AVE., DURANT, OK 74701
OKLAHOMA CA #5413 EXP. JUNE 30, 2023

SUBMITTAL / REVISIONS:

DATE	BY	SUBMITTAL / REVISION
03/22	JR	ODEQ SUBMITTAL
06/22	JR	ISSUED FOR BIDDING
07/22	JR	REVISED PER ADDENDUM NO. 1

SHAWNEE MUNICIPAL AUTHORITY
WASTEWATER SYSTEM IMPROVEMENTS
CONTRACT DOCUMENTS VOL. 4 OF 6 - NORTHSIDE WWTP

EFFLUENT LIFT STATION
MECHANICAL PLAN AND SCHEDULES

PROJECT NO. SHN-20-01
DATE 06/22
DRAWN BY: TL
CHECKED BY: JR
REVIEWED BY: DBW
SCALE: 1/4"=1'-0"

BAR IS ONE INCH ON ORIGINAL DRAWING
0" 1"
IF NOT ONE INCH ON THIS SHEET, ADJUST SCALES ACCORDINGLY

SHEET
LS-1

LOW PROFILE AERATION SYSTEM NOTES:

1. MATERIALS OF CONSTRUCTION TO BE T-304 STAINLESS STEEL.
2. SLOPE OF CONCRETE FLOOR AND LEVEL OF CONCRETE FLOOR ACROSS WIDTH OF BASIN IS CRITICAL TO PROPER SYSTEM PERFORMANCE.
3. CONCRETE SURFACE TO BE FLAT AND SMOOTH (¼" IN 10' IN ALL DIRECTIONS), AND IS CRITICAL FOR PROPER SEALING.
4. PLACE SEAL MATERIAL BETWEEN MATING STEEL AND CONCRETE SURFACES BEFORE ANCHORAGE. COORDINATE WITH MANUFACTURER.
5. PROVIDE SEALING AND EQUIPMENT INSTALLATION PLAN TO ENGINEER AND MANUFACTURER FOR APPROVAL PRIOR TO CONSTRUCTION.
6. AREA BETWEEN PLCA AND WALL WILL BE GROUTED TO ACTUAL SUPPLIED WIDTH. COORDINATE WITH MANUFACTURER.

HOIST NOTES:

1. PROVIDE MOTORIZED TROLLEY HOIST CAPABLE OF LIFTING SUBMERSIBLE PUMPS FROM WET WELL FOR MAINTENANCE AND REPAIR.
2. HOIST SUPPLIER SHALL INSPECT AND CERTIFY HOIST INSTALLATION MEETS MINIMUM STANDARDS AND IS APPROPRIATE FOR THIS APPLICATION.

VALVE SCHEDULE STRUCTURE #24

VALVE I.D.	VALVE TYPE	VALVE SIZE	MOTORIZED
L11AGV01	CHECK	14"	NA
L11APV01	PLUG	14"	YES
L11AAR01	COMBINATION AIR	2"	NA
L11BGV01	CHECK	14"	NA
L11BPV01	PLUG	14"	YES
L11BAR01	COMBINATION AIR	2"	NA
L11CGV01	CHECK	14"	NA
L11CPV01	PLUG	14"	YES
L11CAR01	COMBINATION AIR	2"	NA
L11DAV01	COMBINATION AIR	2"	NA
L11EPV01	PLUG	6"	NO
L11EPV02	PLUG	6"	NO

NOTES:

1. ROUTE AIR/VAC DRAWS TO FLOOR DRAIN IN PVC.
2. AIR RELEASE VALVES TO BE SUPPLIED WITH ISOLATION BALL VALVE & ½" SAMPLE COCK.

PIPING SCHEDULE STRUCTURE #24

NO.	ITEM	DESCRIPTION/NOTES
1	14" D.I. SPOOL, FLxFL	
2	14" D.I. 90° BEND, FLxFL	WITH RESTRAINED GLAND
3	14" D.I. DISMANTLING JOINT, FLxFL	
4	14" WALL PIPE, FLxPE	WITH THRUST COLLAR
5	30"x30"x14" DI TEE, FLxFL	
6	30" D.I. SPOOL, FLxFL	
7	30" D.I. BLIND FLANGE, FL	
8	30" D.I. SPOOL, FLxPE	
9	6" D.I. WALL PIPE, PExMJ	WITH THRUST COLLAR
10	30" WALL PIPE, FLxMJ	WITH THRUST COLLAR
11	3" PVC CHECK VALVE	
12	3" SCH. 80 PVC	IN 4" D.I. WALL SLEEVE
13	3" SHC. 80 PVC 90° BEND	
14	FLOOR DRAIN	NEENAH MODEL R-4937-A
15	PIPE SUPPORT	
16	48" WALL PIPE, FLxMJ	
17	6" D.I. 90° BEND, MJxMJ	
18	PIPE SUPPORT	
19	6" D.I. SPOOL	

PUMP SCHEDULE STRUCTURE #24

NO.	FLOW	TDH-DES	FUNCTION	CONTROL	HP	EFFICIENCY MIN.
24P101-24104	6000 GPM	30'	PRIMARY	VFD	75	77%

PUMP NOTES:

1. PUMPS SHALL FENTAIR OR APPROVED EQUAL.
2. PUMPS SHALL BE PROVIDED WITH BASE ELBOWS, S.S. RAILS, AND S.S. LIFTING CHAINS.
3. PROVIDE FITTINGS AS REQUIRED TO CONNECT BASE ELBOWS TO LIFT STATION PIPING.
4. EACH PUMP SHALL BE EQUIPPED WITH A VARIABLE FREQUENCY DRIVE.
5. HOLD CONDUIT TIGHT TO BOTTOM OF WET WELL SLAB. ONE CONDUIT FOR EACH POWER CABLE, ONE FOR FLOAT SWITCHES.
6. SEAL CONDUITS TO KEEP WET WELL GASSES OUT OF CONTROL PANEL.
7. LOCATED FLOATS AND CABLE HOLDER AWAY FROM INLET PIPE.
8. ALL COMPONENTS SUBJECT TO CONTACT WITH WASTEWATER SHALL BE DUCTILE IRON OR STAINLESS STEEL.
9. SEE SHEET HW-5 FOR GATE DETAIL.
10. PIPE SUPPORT LOCATIONS ARE FOR REFERENCE ONLY & MORE MAY BE REQUIRED PRE SPECIFICATIONS AND/OR INDUSTRY STANDARD.
11. WETWELL TO BE EQUIPPED WITH A LEVEL TRANSDUCER AND 3 BACKUP FLOATS (LOW LEVEL, ALARM, INFLUENT CLOSE).



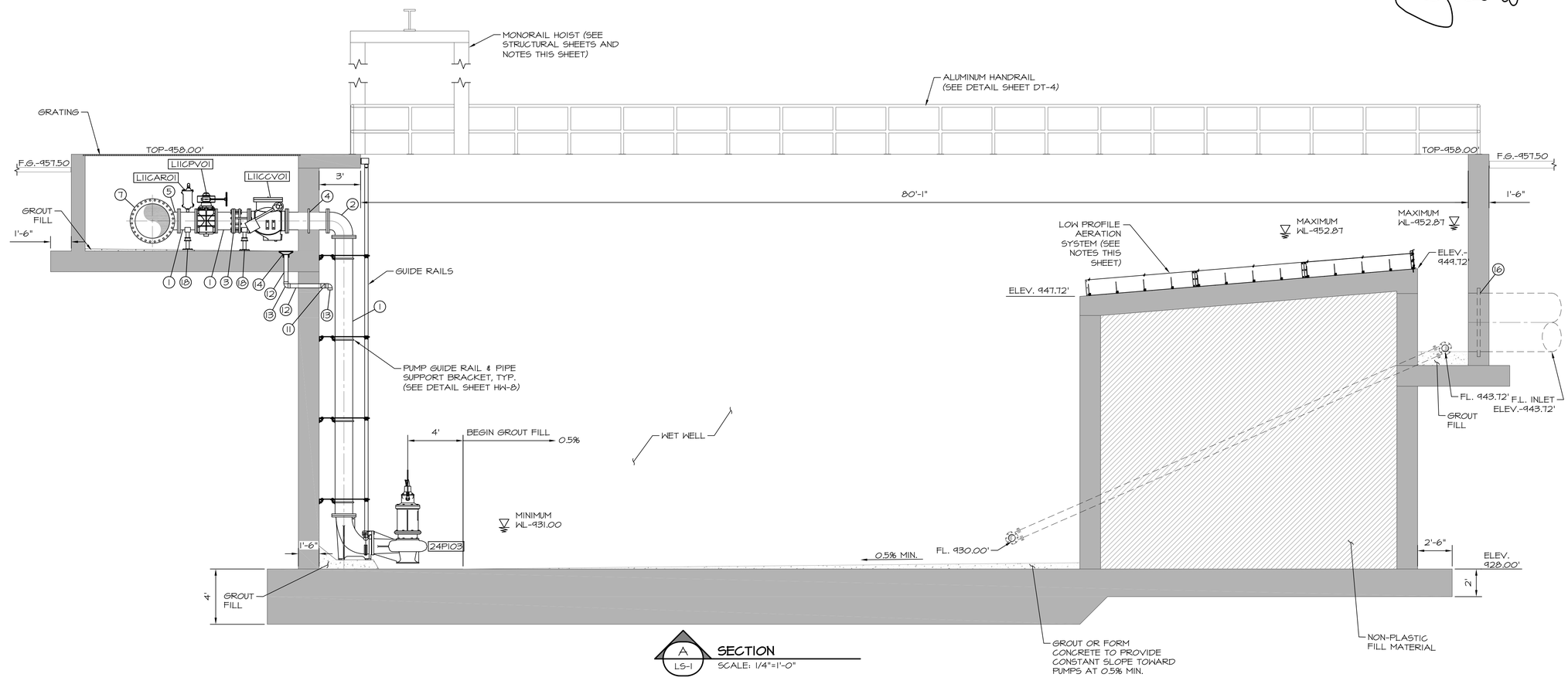

A / LS-1 **SECTION**
SCALE: 1/4"=1'-0"

WALL ENGINEERING
223 N. WASHINGTON AVE., DURANT, OK 74701
OKLAHOMA CA #5413 EXP. JUNE 30, 2023

SUBMITTAL / REVISIONS:

DATE	BY	SUBMITTAL / REVISION
03/22	JR	ODEQ SUBMITTAL
06/22	JR	ISSUED FOR BIDDING
07/22	JR	REVISED PER ADDENDUM NO. 1

SHAWNEE MUNICIPAL AUTHORITY
WASTEWATER SYSTEM IMPROVEMENTS
CONTRACT DOCUMENTS VOL. 4 OF 6 - NORTHSIDE WWTP

EFFLUENT LIFT STATION
MECHANICAL SECTION AND SCHEDULES

PROJECT NO. SHN-20-01
DATE 06/22
DRAWN BY: TL
CHECKED BY: JR
REVIEWED BY: DBW
SCALE: 1/4"=1'-0"

BAR IS ONE INCH ON ORIGINAL DRAWING
0" 1"
IF NOT ONE INCH ON THIS SHEET, ADJUST SCALES ACCORDINGLY

SHEET
LS-2

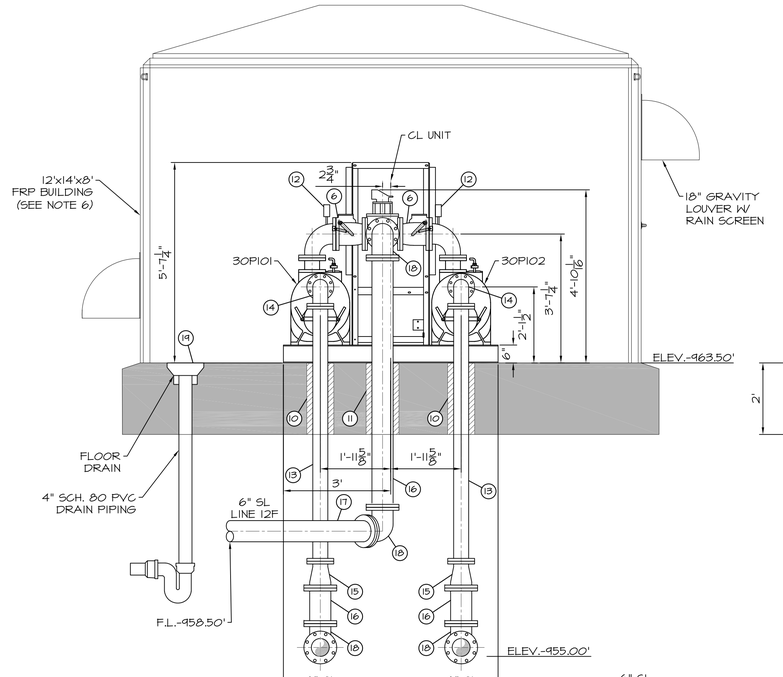

A WAS-1 **SECTION**
SCALE: 1/2"=1'-0"

PLAN VIEW
SCALE: 1/2"=1'-0"

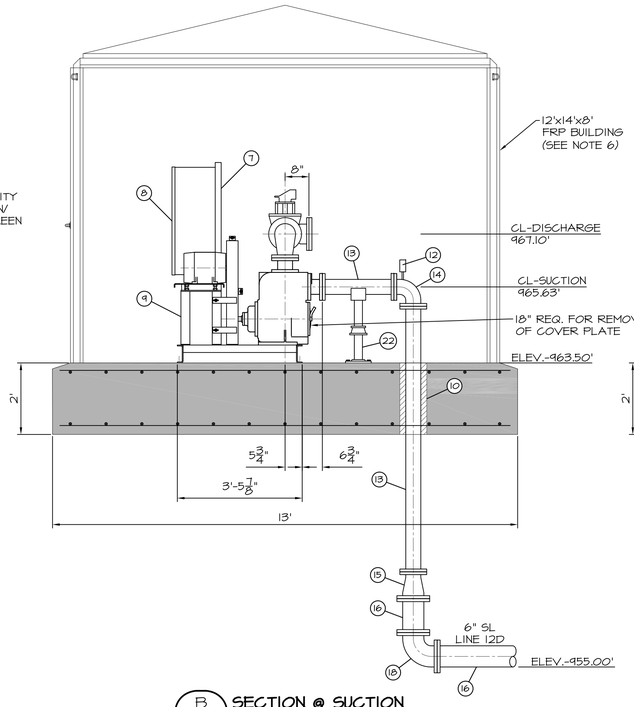

B WAS-1 **SECTION @ SUCTION**
SCALE: 1/2"=1'-0"

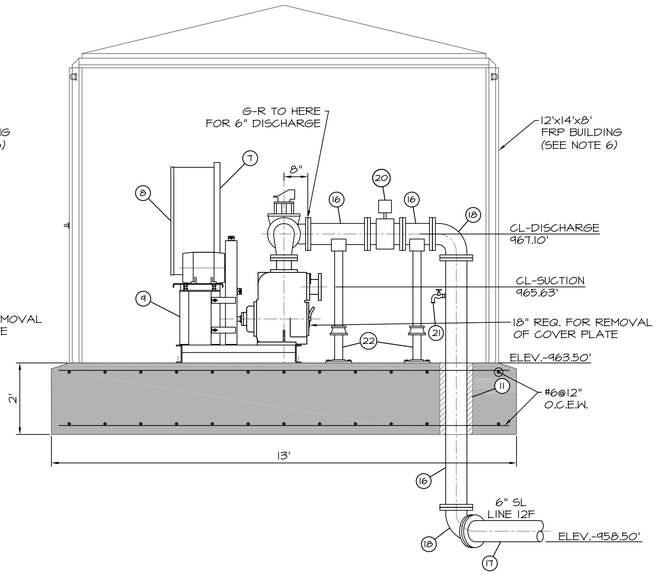

B WAS-1 **SECTION @ DISCHARGE**
SCALE: 1/2"=1'-0"

PUMP SCHEDULE - STRUCTURE #30				
NO.	FLOW	TDH-DES	CONTROL	HP
30P101 & 30P102	600 GPM	20'	VFD	7.5

PIPING & EQUIPMENT SCHEDULE - STRUCTURE #30		
NO.	DESCRIPTION	MATERIAL & SIZE
1	MOTOR	CAST IRON
2	BELT GUARD ASSY.	STEEL
3	STATION BASE ASSY.	STEEL
4	PUMP	CAST IRON, T4A-B (30P101 & 30P102)
5	DISCHARGE PLUG VALVE	CAST IRON, 6"
6	DISCHARGE CHECK VALVE	CAST IRON, 6"
7	CONTROL PANEL FRAME	STEEL
8	CONTROL PANEL	STEEL, 36" X 30"
9	MOTOR BASE ASSY.	STEEL
10	LINK SEAL FOR 4" DIP W/SLEEVE	
11	LINK SEAL FOR 6" DIP W/SLEEVE	
12	AIR/VAC VALVE	
13	4" D.I. SPOOL, GRxGR	
14	4" D.I. 90° BEND, GRxGR	
15	4"x6" D.I. CONCENTRIC REDUCER	
16	6" D.I. SPOOL, PExGR	
17	6" D.I. SPOOL, PExGR	
18	6" D.I. 90° BEND, GRxGR	
19	FLOOR DRAIN	NEENAH MODEL R-4937-A
20	6" FLANGED MAGNETIC FLOW METER	L12FMM01
21	1-1/2" SAMPLE TAP WITH VALVE	
22	PIPE SUPPORTS	

VALVE SCHEDULE STRUCTURE #28			
VALVE I.D.	VALVE TYPE	VALVE SIZE	MOTORIZED
L12DPV01	PLUG	6"	YES
L12EPV01	PLUG	6"	YES
L12FPV01	PLUG	6"	YES

NOTES:

1. SLOPE FLOOR TO DRAIN.
2. ELECTRICAL & CONTROL CONDUIT WILL BE UNDER THE CONCRETE SLAB. (NO ELECTRICAL EQUIPMENT WILL BE MOUNTED ON THE FIBERGLASS ENCLOSURE.)
3. ALL FLANGED FITTINGS FROM THE PLUG VALVES TO THE PUMPS WILL HAVE RESTRAINT GLANDS.
4. 90° BENDS, BOTH SUCTION & DISCHARGE AT THE PUMPS, SHALL BE TAPPED FOR PRESSURE GAUGES.
5. CONTRACTOR SHALL SUBMIT A DETAILED PLAN SHOWING PIPING ARRANGEMENT PIPE SIZES, LENGTHS, ELEVATIONS FOR PUMP STATIONS TO ENGINEER FOR APPROVAL PRIOR TO STARTING THIS WORK.
6. WAS PUMP BUILDING SHALL BE EQUIPPED WITH BREAKER PANEL, LIGHTING, ELECTRICAL RECEPTACLES, 18" EXHAUST FAN & LOUVER, AND 5KW HEATER WTHERMOSTAT. SUBMITTAL REQUIRED.
7. ENCLOSURE SHALL BE MOUNTED WITH ⅜"x6" SST. EXPANSION ANCHORS ON 12" CENTERS. "RED HEAD" TYPE. SEAL EXTERIOR CONNECT WITH MASTIC.
8. ROUTE AIR RELEASE DISCHARGE TO FLOOR DRAIN (SCH 40 PVC).
9. DUCTILE IRON PIPING SYSTEM TO BE DESIGNED AND FURNISHED COMPLETE BY VICTAULIC.
10. FOUNDATION PREP PER GENERAL NOTES.

REGISTERED PROFESSIONAL ENGINEER
21108
BRANDON WALL
OKLAHOMA

WALL ENGINEERING
223 N. WASHINGTON AVE., DURANT, OK 74701
OKLAHOMA CA #6413 EXP. JUNE 30, 2023

SUBMITTAL / REVISIONS:

DATE	BY	SUBMITTAL / REVISION
03/22	JR	ODEQ SUBMITTAL
05/22	JR	REVISED PER ODEQ COMMENT
06/22	JR	ISSUED FOR BIDDING
07/22	JR	REVISED PER ADDENDUM NO. 1

SHAWNEE MUNICIPAL AUTHORITY
WASTEWATER SYSTEM IMPROVEMENTS
CONTRACT DOCUMENTS VOL. 4 OF 6 - NORTHSIDE WWTP

WASTE SLUDGE PUMP STATION
PLAN, SEACTION AND DETAILS

PROJECT NO.
SHN-20-01
DATE
06/22
DRAWN BY:
TL
CHECKED BY:
JR
REVIEWED BY:
DBW
SCALE:
1/2"=1'-0"

BAR IS ONE INCH ON ORIGINAL DRAWING
0" 1"
IF NOT ONE INCH ON THIS SHEET, ADJUST SCALES ACCORDINGLY

SHEET
WAS-1

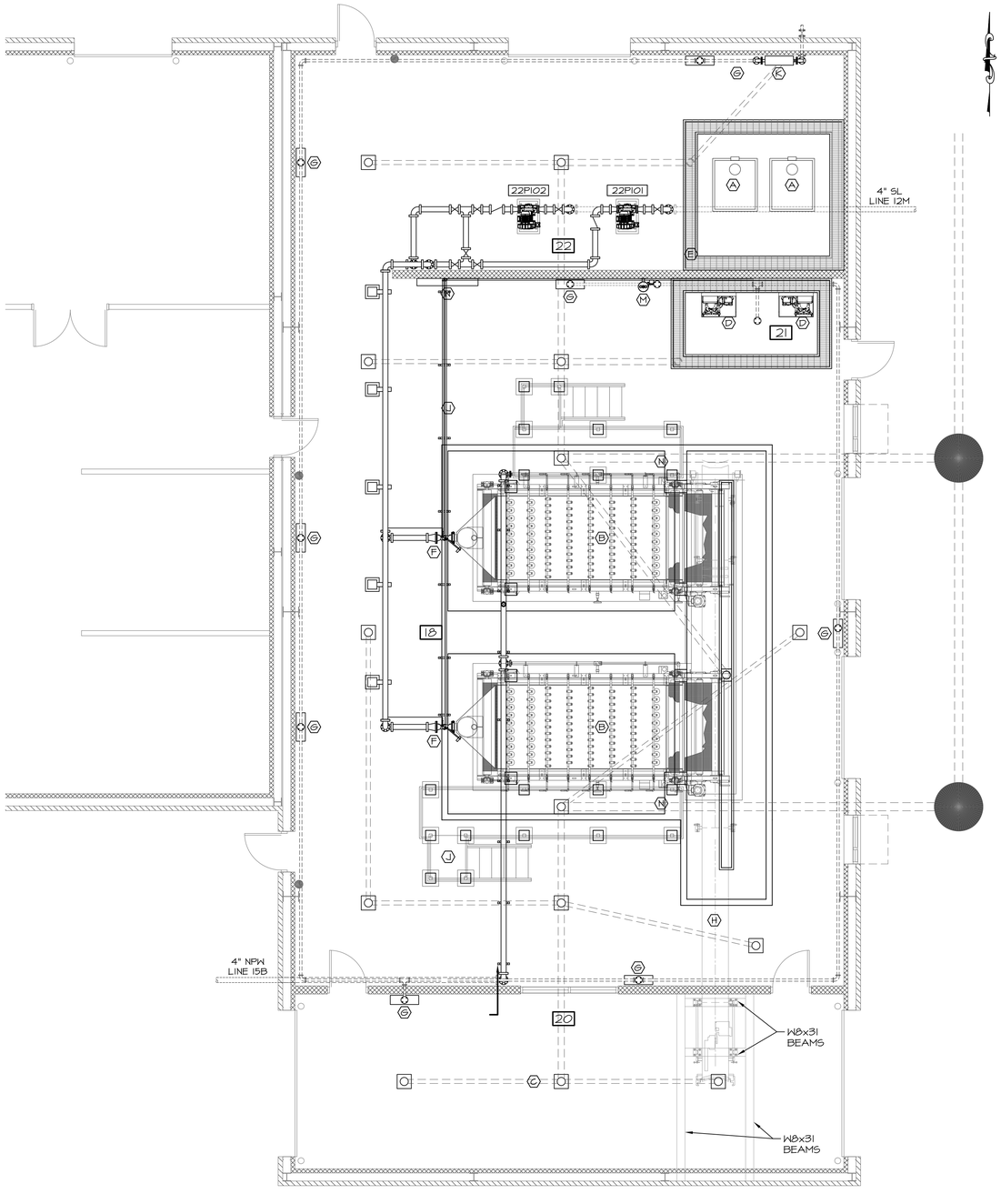

SLUDGE HANDLING FACILITY PLAN VIEW

SCALE: 3/16"=1'-0"

APPURTENANCE SCHEDULE STRUCTURES #18, #20, #21&#22	
APP. NO	DESCRIPTION
A	POLYMER TOTES WITH POLYMER TRANSFER PUMP AND TOTE MIXER
B	2 METER BELT FILTER PRESS
C	NOT USED
D	POLYMER FEED PUMPS AND CONTROLLERS (SEE SHEET SHF-10 FOR DETAILS)
E	NOT USED
F	6" POLYMER INJECTION RING W/MIXING VALVE (BY BFP MANUFACTURER)
G	WALL MOUNTED UTILITY STATION (SEE NOTE 6) (SEE DETAIL SHEETS)
H	CONVEYOR
J	WALKWAY (SEE SHF-9 FOR DETAILS)
K	BACKFLOW PREVENTER (SEE DT-5 FOR DETAIL) (2" WATTS LF009)
L	FLOOR DRAIN (SIZE TO MATCH PIPE DIAMETER)
M	WALL MOUNTED EYE/FACE WASH (SEE NOTE 5)
N	ELECTRICAL/CONTROL PANEL

NOTES:

1. SEE ARCHITECTURAL SHEETS FOR BUILDING INFORMATION/DETAILS. SLOPE FLOORING TO DRAINS PER SHF-4 (NOT SHOWN ON ARCHITECTURAL/ARCHITECTURAL STRUCTURAL).
2. CONTRACTOR TO VERIFY EQUIPMENT DIMENSIONS WITH EQUIPMENT SUPPLIER PRIOR TO INSTALLATION.
3. EYE WASH TO BE BRADLEY MODEL S19-220T. FIELD ROUTE DRAIN LINE TO ADJACENT TRENCH DRAIN.
4. CONTRACTOR TO US BELT FILTER PRESS SUBMITTAL DRAWINGS TO SIZE AND LAYOUT FOOTING SUPPORTS. DIMENSIONS SHOWN ON THESE DRAWINGS ARE FOR REFERENCE ONLY.
5. ALL WALL MOUNTED UTILITY STATIONS TO BE FURNISHED WITH 30' INDUSTRIAL 1" HOSES WITH HAND HELD SPRAY NOZZLES (1 TOTAL).
6. COORDINATE ALL COMPONENTS SHOWN IN SHF SHEETS WITH ELECTRICAL AND CONTROLS. NOT ALL COMPONENTS ARE OUTLINED IN ELECTRICAL DRAWINGS (METERS, SOLENOID VALVES, SCALES, ECT.). IT IS THE CONTRACTORS RESPONSIBILITY THAT ADEQUATE CONDUIT, WIRE, SCADA INTERACTION, ECT. IS INCLUDED.
7. CHEMICAL SCALE OUTPUT TO BE ROUTED UNDERGROUND TO NEAREST WALL. LOCATION TO BE APPROVED BY ENGINEER.
8. ANY CONFLICT BETWEEN SHF SHEETS & ARCHITECTURAL, STRUCTURAL OR ELECTRICAL SHEETS, SHF SHEETS GOVERN.
9. INTEGRATE POLYMER CONTROLS TO BELT PRESS CONTROL PANEL SUCH THAT POLYMER CAN BE STARTED/STOPPED/CONTROLLED REMOTELY FROM BFP CONTROL PANEL.



WALL ENGINEERING
223 N. WASHINGTON AVE. DURANT, OK 74701
OKLAHOMA CA #5413 EXP. JUNE 30, 2023

SUBMITTAL / REVISIONS:

DATE	BY	SUBMITTAL / REVISION
03/22	JR	ODEQ SUBMITTAL
06/22	JR	ISSUED FOR BIDDING
07/22	JR	REVISED PER ADDENDUM NO. 1

SHAWNEE MUNICIPAL AUTHORITY
WASTEWATER SYSTEM IMPROVEMENTS
CONTRACT DOCUMENTS VOL. 4 OF 6 - NORTHSIDE WWTP

SLUDGE HANDLING FACILITY
PLAN VIEW AND APPURTENANCE SCHEDULES

PROJECT NO.
SHN-20-01
DATE
06/22
DRAWN BY:
JR
CHECKED BY:
BW
REVIEWED BY:
DBW
SCALE:
3/16"=1'-0"

BAR IS ONE INCH ON ORIGINAL DRAWING
0" 1"
IF NOT ONE INCH ON THIS SHEET, ADJUST SCALES ACCORDINGLY

SHEET
SHF-1

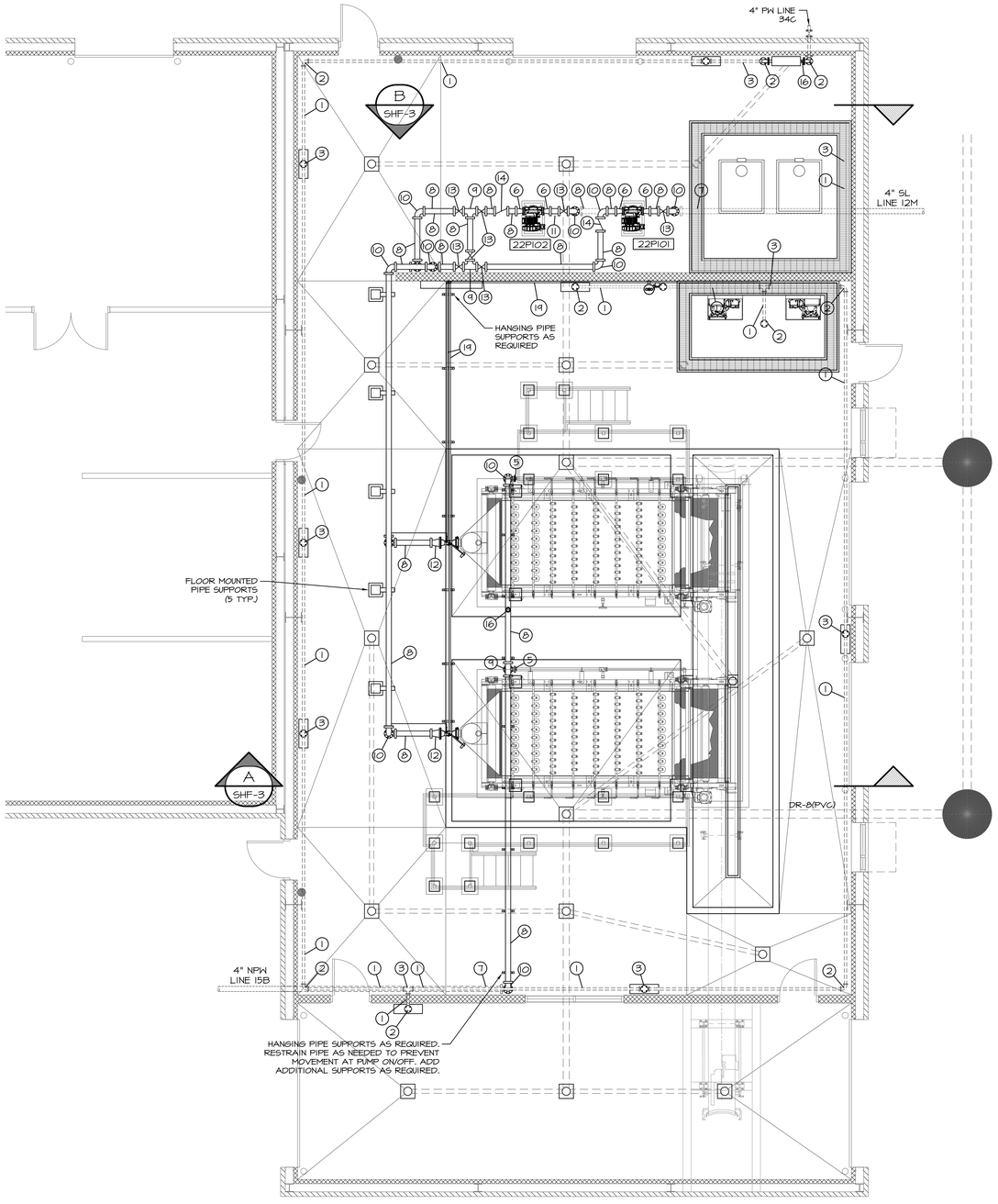

SLUDGE HANDLING FACILITY PLAN VIEW PIPING PLAN

SCALE: 3/16"=1'-0"

PUMP SCHEDULE STRUCTURE #22					
NO.	FLOW	TDH-DES	FUNCTION	CONTROL	HP
22P101-22P102	140 GPM	30'	SLUDGE FEED	VFD	7.5

PIPING SCHEDULE STRUCTURES #18, #20, #21&#22		
NO.	ITEM	DESCRIPTION
1	4" D.I. SPOOL	
2	4" SST 90° BEND, MJxMJ	
3	4" D.I. TEE	
4	NOT USED	
5	2 ½" SST ADAPTER, GRxNPT	
6	3"x4" SST ECCENTRIC REDUCER, FLxGR	
7	4" D.I. SPOOL	
8	4" SST SPOOL, GRxGR	
9	4" SST TEE, GRxGR	
10	4" SST 90° BEND, GRxGR	
11	PIPE SUPPORTS (14 TYPICAL)	AS NEEDED
12	4"x6" ECCENTRIC REDUCER, FLxGR	
13	4" PLUG VALVE, GRxGR	ELECTRIC ACTUATED, SEE NOTE 11
14	4" CHECK VALVE, GRxGR	
15	4" MAGNETIC FLOW METER	
16	½" COMBINATION AIR/VAC VALVE	SEE NOTE 6
17	1-1/2" SST BUTTERFLY VALVE & SMOOTH NOSED SAMPLE TAP W/DRIP CAP	LEVER ACTUATED
18	2" SST. SPOOL (GRxNPT)	
19	1-1/2" CPVC POLYMER SOLUTION FEED LINE	
20	4"x2-1/2" REDUCER, GRxGR	
21	2-1/2" SST BALL VALVE, GRxGR	SEE NOTE 11

NOTES:

1. ALL STAINLESS STEEL PIPING AND VALVES (316) SHALL BE FURNISHED AS A COMPLETE SYSTEM BY VICTAULIC.
2. CONTRACTOR SHALL VERIFY PUMP DISCHARGE/SUCTION PIPE SIZING WITH PUMP MANUFACTURER.
3. PIPING SHALL BE ADEQUATELY SUPPORTED TO PREVENT MOVEMENT DURING PUMP STARTUP/SHUTDOWN. SHOULD MOVEMENT OCCUR, CONTRACTOR SHALL PROVIDE ADDITIONAL SUPPORTS AT NO COST TO THE OWNER.
4. INSULATE/PROTECT DUCTILE TO STAINLESS TRANSITIONS WITH PAINTING, PLATING OR SPECIALIZED FITTINGS.
5. POLYMER PIPING FROM PUMPS TO MIXING VALVE NOT SHOWN FOR CLARITY.
6. AIR/VAC VALVE VENT TO BE EXTENDED TO FLOOR IN 1/2" PVC AND BE ROUTED TO BFP DRAIN BASIN.
7. ALL ABOVE GRADE PIPING TO BE SST GROOVED END. COMPLETE SYSTEM TO BE DESIGNED AND FURNISHED BY VICTAULIC.
8. POLYMER PIPING FINAL LAYOUT AND ROUTING SHALL BE FIELD DETERMINED. CONTRACTOR TO SUBMIT SCHEMATIC OF LOCATION/ROUTING FOR APPROVAL BY ENGINEER.
9. ALL POLYMER FEED PIPING TO BE CPVC.
10. SHEETS (SHF) SUPERSEDE PLUMBING SHEETS (PL) WHERE CONFLICTS OCCUR.
11. ALL PLUG VALVES TO BE FULL PORT.

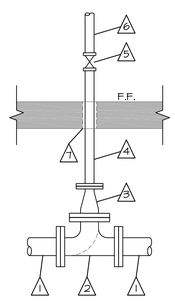

2" LEGEND

1	4" D.I. SPOOL
2	4" D.I. TEE/90° BEND
3	4"x2" D.I. REDUCER (MJxMJ)
4	2" SST SPOOL (MJxGR)
5	2" SST BALL VALVE (GRxGR)
6	2" SST GROOVED PIPE SYSTEM (BY VICTAULIC)
7	SST FLOOR SLEEVE WITH LINK SEAL

NOTE:
1. LOCATIONS:
   - RPZ (2)
   - WALL MOUNTED UTILITY STATIONS (7)
   - POLYMER FEED (1)
   - EYE WASH (1)

4" LEGEND

1	4" D.I. SPOOL
2	4" D.I. TEE/90° BEND
3	4" SPOOL (MJxGR)
4	4" SST SPOOL (MJxGR)
5	NOT USED
6	4" SST GROOVE PIPE SYSTEM (BY VICTAULIC)
7	SST FLOOR SLEEVE WITH LINK SEAL

NOTE:
1. LOCATIONS:
   - NON-POTABLE WATER (1)
   - SLUDGE (2)

2"/4" FLOOR PENETRATION DETAIL

SCALE: NOT TO SCALE



WALL ENGINEERING
223 N. WASHINGTON AVE., DURANT, OK 74701
OKLAHOMA CA #5413 EXP. JUNE 30, 2023

SUBMITTAL / REVISIONS:

DATE	BY	SUBMITTAL / REVISION
03/22	JR	ODEQ SUBMITTAL
06/22	JR	ISSUED FOR BIDDING
07/22	JR	REVISED PER ADDENDUM NO. 1

SHAWNEE MUNICIPAL AUTHORITY
WASTEWATER SYSTEM IMPROVEMENTS
CONTRACT DOCUMENTS VOL. 4 OF 6 - NORTHSIDE WWTP

SLUDGE HANDLING FACILITY
PIPING PLAN AND SCHEDULES

PROJECT NO.
SHN-20-01

DATE
06/22

DRAWN BY:
JR

CHECKED BY:
BW

REVIEWED BY:
DBW

SCALE:
3/16"=1'-0"

BAR IS ONE INCH ON ORIGINAL DRAWING
0" 1"
IF NOT ONE INCH ON THIS SHEET, ADJUST SCALES ACCORDINGLY

SHEET

SHF-2

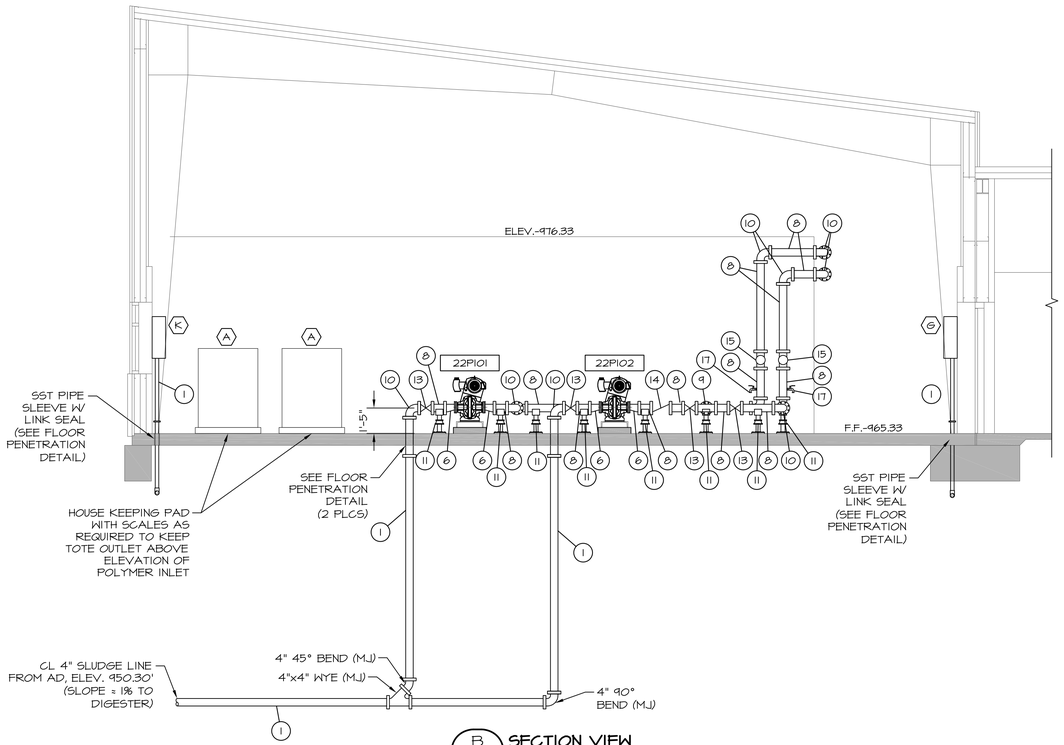

B SHF-1 **SECTION VIEW**
SCALE: 1/4"=1'-0

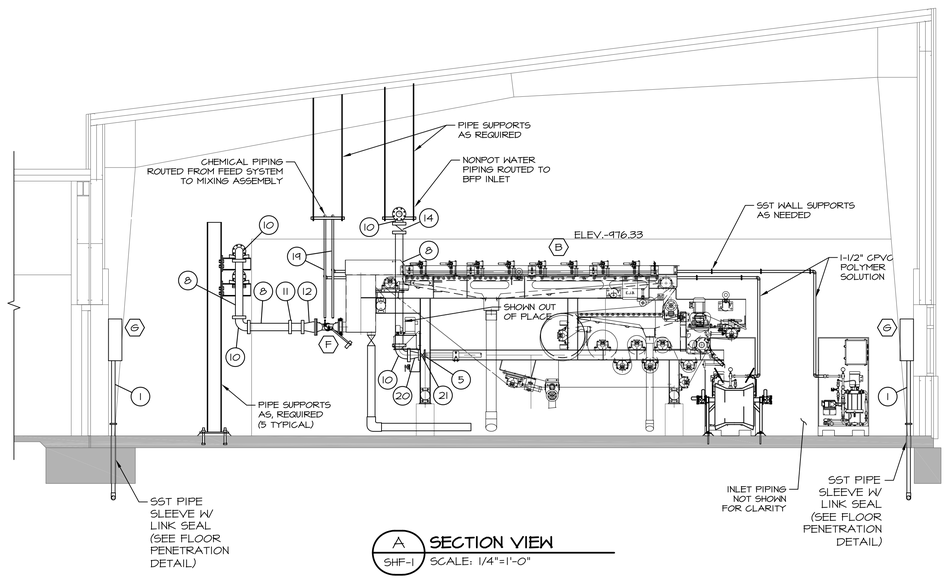

A SHF-1 **SECTION VIEW**
SCALE: 1/4"=1'-0"

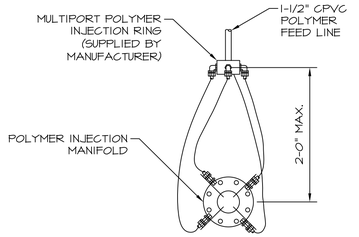

POLYMER MIXING ASSEMBLY
SCALE: N.T.S.

NOTES:
1. INSTALL DIAPHRAGM STYLE PRESSURE SWITCHES ON SUCTION AND DISCHARGE SIDE OF EACH SLUDGE PUMP WITH ½" TOP.
2. CONTRACTOR TO PROVIDE THRUST RESTRAINTS AS NEEDED FOR A COMPLETE SYSTEM.

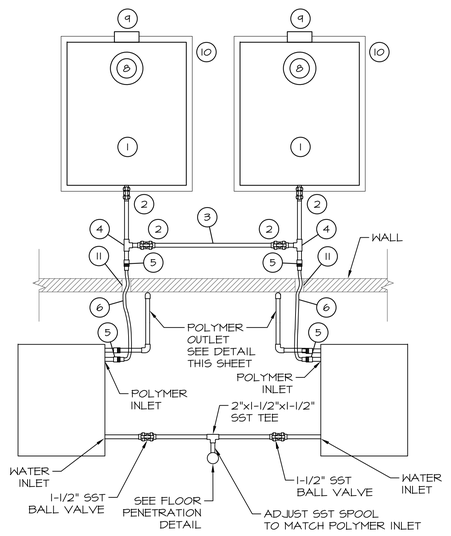

POLYMER FEED SCHEMATIC
SCALE: NOT TO SCALE

NOTES:
1. SUBMIT LAYOUT DRAWING CORRECTLY DIMENSIONED AFTER COORDINATION WITH EQUIPMENT SUPPLIER FOR APPROVAL BY ENGINEER.
2. PROVIDE FLOODED SUCTION AT ALL TIME TO POLYMER PUMP.
3. COORDINATE SOLENOID VALVES AND FLOW METERS WITH ELECTRICAL/CONTROLS SUPPLIER/INSTALLER.
4. METER DISPLAYS TO BE WALL MOUNTED ADJACENT TO METERS.

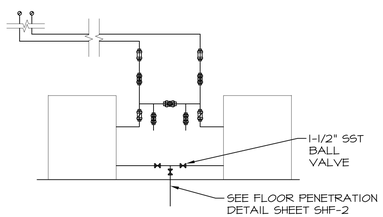

PUMP SECTION VIEW

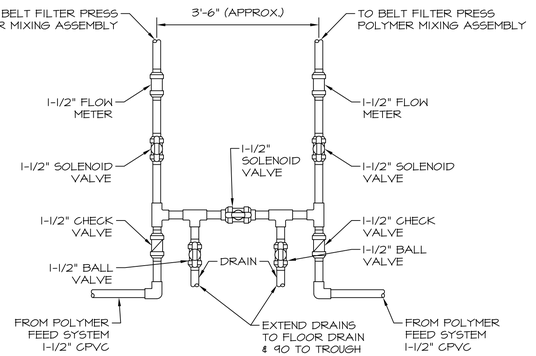

POLYMER FEED OUTLET PIPING SCHEMATIC
SCALE: NOT TO SCALE

PUMP SCHEDULE STRUCTURE #22					
NO.	FLOW	TDH-DES	FUNCTION	CONTROL	HP
22P101-22P102	140 GPM	30'	SLUDGE FEED	VFD	7.5

PIPING SCHEDULE STRUCTURES #18, #20, #21 & #22		
NO.	ITEM	DESCRIPTION
1	4" D.I. SPOOL	
2	4" SST 90° BEND, M.JxM.J	
3	4" D.I. TEE	
4	NOT USED	
5	2 ½" SST ADAPTER, GRxNPT	
6	3"x4" SST ECCENTRIC REDUCER, FLxGR	
7	4" D.I. SPOOL	
8	4" SST SPOOL, GRxGR	
9	4" SST TEE, GRxGR	
10	4" SST 90° BEND, GRxGR	
11	PIPE SUPPORTS (14 TYPICAL)	AS NEEDED
12	4"x6" ECCENTRIC REDUCER, FLxGR	
13	4" PLUG VALVE, GRxGR	ELECTRIC ACTUATED, SEE NOTE 11
14	4" CHECK VALVE, GRxGR	
15	4" MAGNETIC FLOW METER	
16	½" COMBINATION AIR/VAC VALVE	SEE NOTE 6
17	1-1/2" SST BUTTERFLY VALVE & SMOOTH NOSED SAMPLE TAP W/DRIP CAP	LEVER ACTUATED
18	2" SST. SPOOL (GRxNPT)	
19	1-1/2" CPVC POLYMER SOLUTION FEED LINE	
20	4"x2-1/2" REDUCER, GRxGR	
21	2-1/2" SST BALL VALVE, GRxGR	SEE NOTE 11

LEGEND

1. 275 GAL. TOTE (1" BOTTOM OUTLET)
2. 1" FULL PORT CPVC BALL VALVE
3. 1" CPVC
4. 1" CPVC TEE
5. 1" QUICK DISCONNECT COUPLING
6. 1" BRAIDED PVC HOSE W/DUAL QUICK DISCONNECT COUPLE EACH END (MALE)
7. 1"x0.5" CPVC REDUCER
8. TOTE MIXER (3/4 HP, 350 RPM)
9. INTEGRAL CHEMICAL TRANSFER PUMP
10. CHEMICAL SCALES (SEE NOTE 2)
11. 2" STAINLESS STEEL WALL SLEEVE (SEE NOTE 1)

NOTES:
1. FIELD LOCATE BELOW ELEVATION OF TOTE OUTLET AND ABOVE ELEVATION OF POLYMER INLET.
2. CHEMICAL SCALE OUTLET TO BE ROUTED UNDERGROUND TO CMU WALL AND TO WALL MOUNTED DISPLAY. COORDINATE WITH ELECTRICAL CONTRACTOR.



WALL ENGINEERING
223 N. WASHINGTON AVE. DURANT, OK 74701
OKLAHOMA CA #5413 EXP. JUNE 30, 2023

SUBMITTAL / REVISIONS:

DATE	BY	SUBMITTAL / REVISION
03/22	JR	ODEQ SUBMITTAL
06/22	JR	ISSUED FOR BIDDING
07/22	JR	REVISED PER ADDENDUM NO. 1

SHAWNEE MUNICIPAL AUTHORITY
WASTEWATER SYSTEM IMPROVEMENTS
CONTRACT DOCUMENTS VOL. 4 OF 6 - NORTHSIDE WWTP

SLUDGE HANDLING FACILITY
SECTION VIEWS AND SCHEDULES

PROJECT NO.
SHN-20-01
DATE
06/22
DRAWN BY:
JR
CHECKED BY:
BW
REVIEWED BY:
DBW
SCALE:
1/4"=1'-0"

BAR IS ONE INCH ON ORIGINAL DRAWING
0" 1"
IF NOT ONE INCH ON THIS SHEET, ADJUST SCALES ACCORDINGLY

SHEET
SHF-3

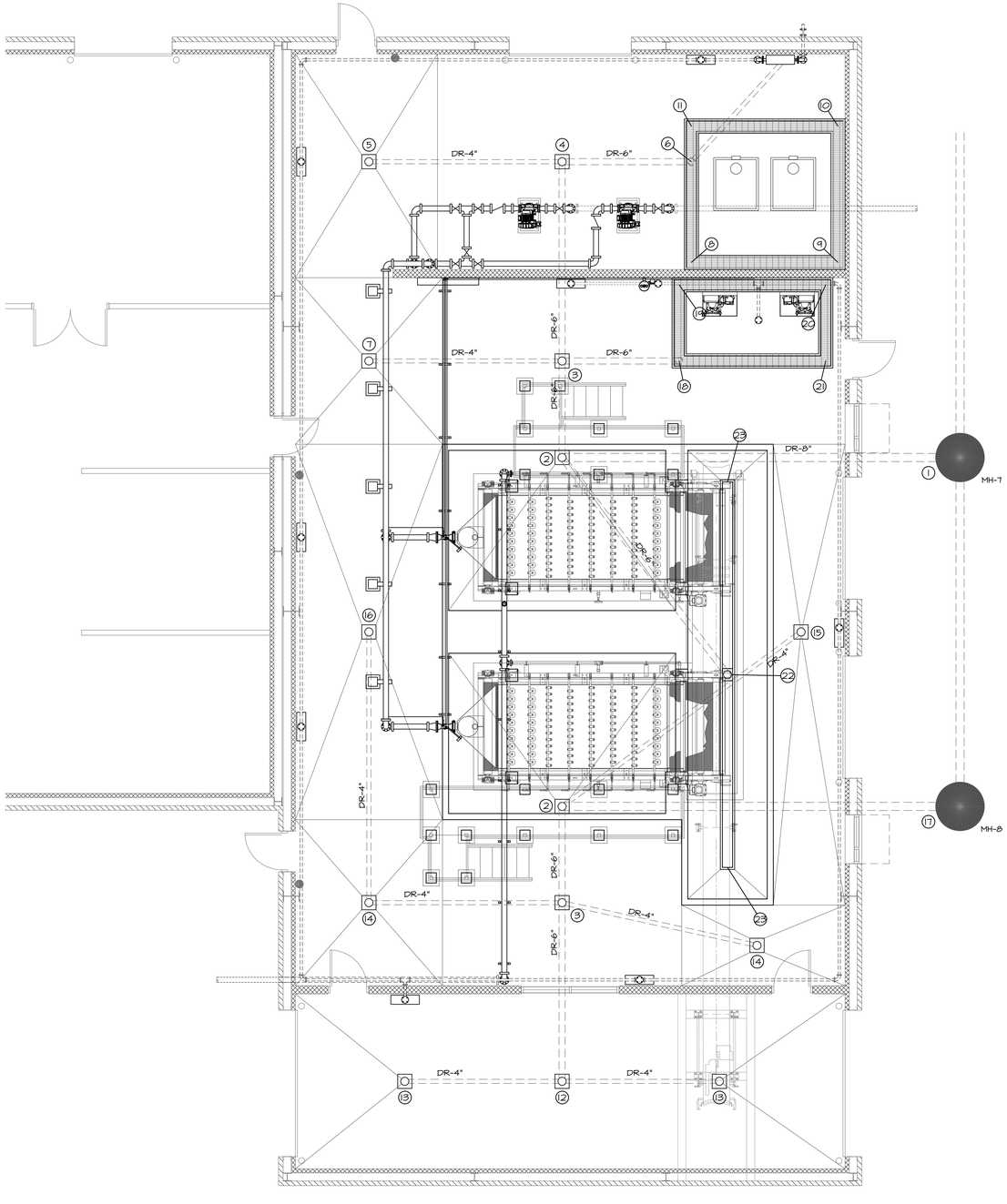

SLUDGE HANDLING FACILITY PLAN VIEW DRAIN SYSTEM PLAN

SCALE: 3/16"=1'-0"

DRAIN PIPING ELEVATIONS STRUCTURES #18, #20, #21&#22				
NO.	FFE	F.L. DRAIN	F.L. MANHOLE/ DRAIN	NOTES
1	NA	459.00'	450.45'	SEE NOTE 1
2	464.99'	459.81'	NA	
3	465.19'	460.00'	NA	
4	465.33'	460.42'	NA	
5	465.19'	460.82'	NA	
6	465.33'	460.68'	464.01'	
7	465.19'	460.40'	NA	
8	465.33'	NA	464.27'	
9	465.33'	NA	464.66'	
10	465.33'	NA	464.38	
11	465.33'	NA	464.08'	
12	465.19'	460.37'	NA	
13	465.19'	460.69'	NA	
14	465.19'	460.40'	NA	
15	465.19'	460.42'	NA	
16	465.19'	460.96'	NA	
17	NA	459.00'	450.56'	SEE NOTE 1
18	465.33'	460.24'	464.20'	
19	465.33'	NA	464.36'	
20	465.33'	NA	464.66'	
21	465.33'	NA	464.50'	
22	465.23	460.28	464.23	
23	465.23	NA	464.56	

NOTES:

1. 8" DRAIN TO TERMINATE IN MANHOLE WITH 8" TIDEFLEX CHECK VALVE (2 PLACES).
2. SEE TRENCH AND DRAIN DETAILS ON OTHER SHEETS FOR SPECIFICS.
3. DRAIN PIPING SYSTEM TO BE DESIGNED AND FURNISHED COMPLETE BY VICTAULIC. GROOVED END (DUCTILE IRON).
4. TRENCH DRAIN GRATING TO BE PEDESTRIAN LOAD RATED 316 STAINLESS STEEL/ADA COMPLIANT.
5. FLOOR DRAINS TO BE ZURN ZM1731/ZM1735.
6. FLOOR DRAINS IN BELT PRESS CONTAINMENT AREA TO BE PROVIDED WITHOUT GRATING.
7. FIELD ROUTE RPZ DRAIN TO TRENCH DRAIN PIPING.

REGISTERED PROFESSIONAL ENGINEER
BRANDON WALL
21108
OKLAHOMA

WALL ENGINEERING

223 N. WASHINGTON AVE., DURANT, OK 74701
OKLAHOMA CA #5413 EXP. JUNE 30, 2023

SUBMITTAL / REVISIONS:

DATE	BY	SUBMITTAL / REVISION
03/22	JR	ODEQ SUBMITTAL
06/22	JR	ISSUED FOR BIDDING
07/22	JR	REVISED PER ADDENDUM NO. 1

SHAWNEE MUNICIPAL AUTHORITY
WASTEWATER SYSTEM IMPROVEMENTS
CONTRACT DOCUMENTS VOL. 4 OF 6 - NORTHSIDE WWTP

SLUDGE HANDLING FACILITY
DRAIN SYSTEM PLAN

PROJECT NO.
SHN-20-01

DATE
06/22

DRAWN BY:
JR

CHECKED BY:
BW

REVIEWED BY:
DBW

SCALE:
3/16"=1'-0"

BAR IS ONE INCH ON ORIGINAL DRAWING
0" 1"
IF NOT ONE INCH ON THIS SHEET, ADJUST SCALES ACCORDINGLY

SHEET

SHF-4

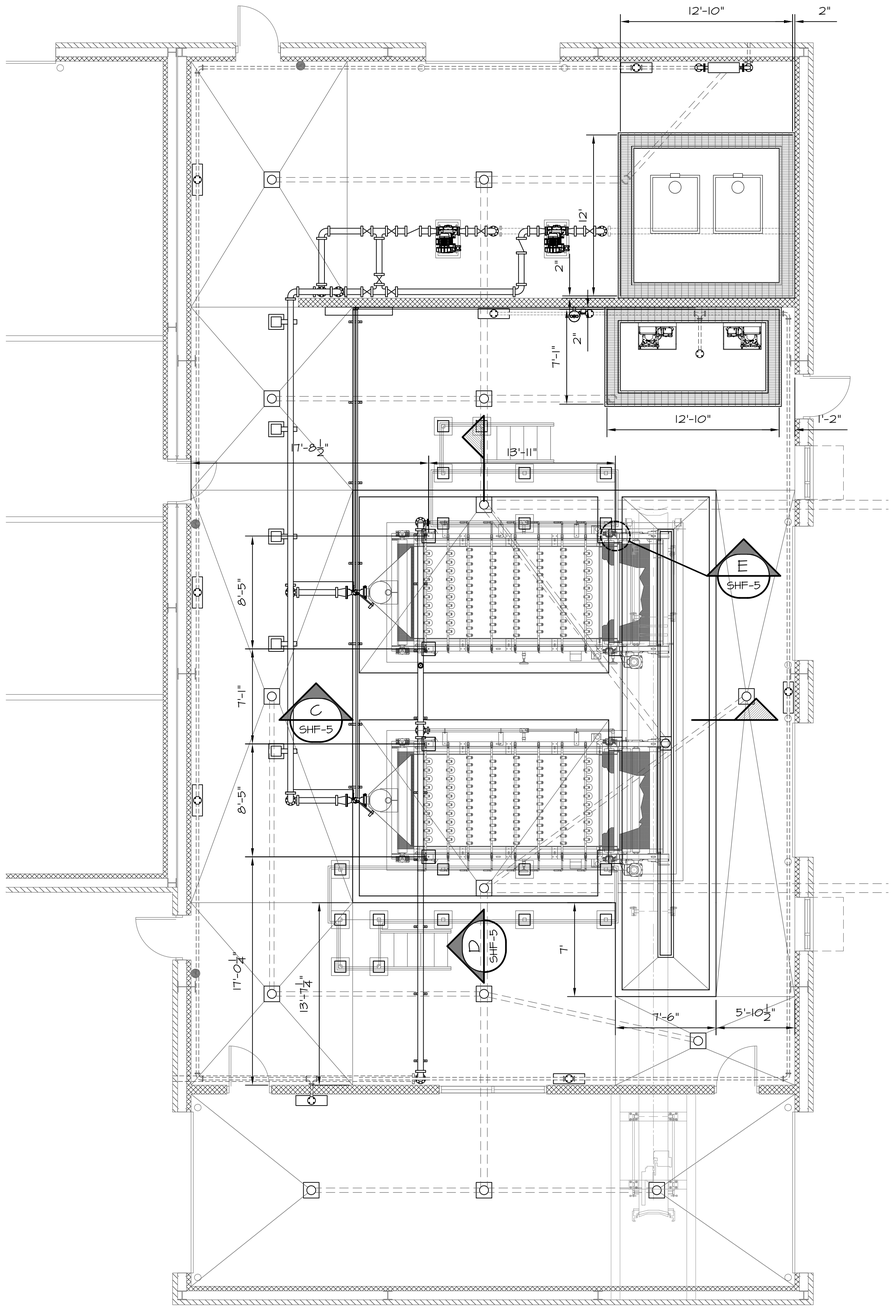

SLUDGE HANDLING FACILITY PLAN VIEW PIPING PLAN

SCALE: 3/16"=1'-0"

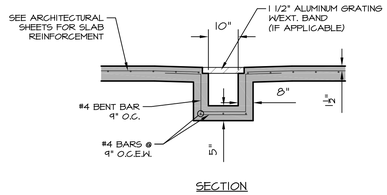

SECTION

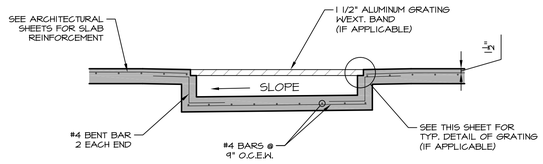

PROFILE

TYPICAL REINFORCEMENT FOR TRENCH DRAIN

SCALE: NOT TO SCALE

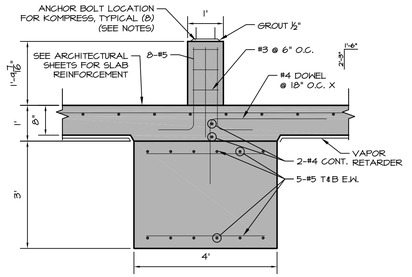

E SHF-5 **SECTION**

SCALE: 1/2" = 1'-0"

NOTE:
1. ¾" ANCHOR BOLTS TO PROJECT 2-1/4" ABOVE FOUNDATION PLATE.
2. TOLERANCE ON ANCHOR BOLT DIMENSIONS IS ⅛" MAX.
3. CONFIRM EXACT ANCHOR PLATE/BOLTS WIDTHS AND REQUIREMENTS WITH MANUFACTURER PRIOR TO CONCRETE PLACEMENT.

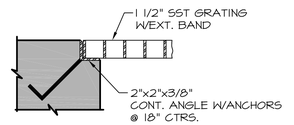

TYPICAL DETAIL OF GRATING

SCALE: NOT TO SCALE

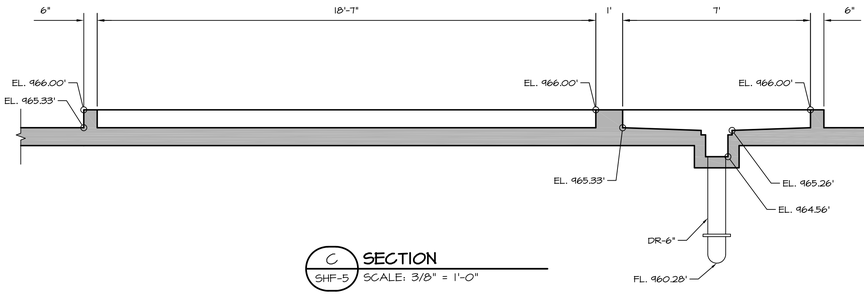

C SHF-5 **SECTION**

SCALE: 3/8" = 1'-0"

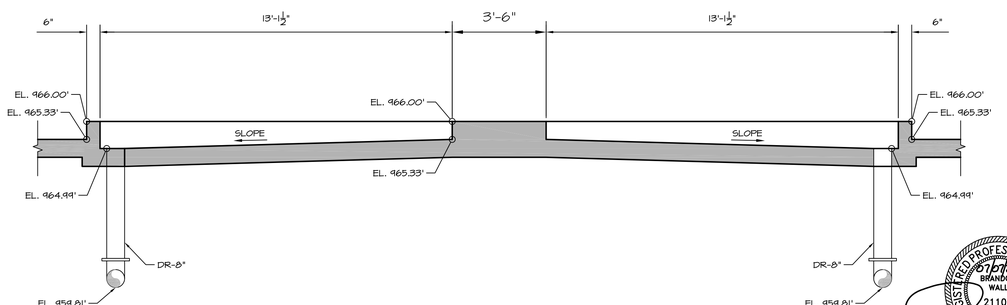

D SHF-5 **SECTION**

SCALE: 3/8" = 1'-0"



WALL ENGINEERING

223 N. WASHINGTON AVE. DURANT, OK 74701
OKLAHOMA CA #5413 EXP. JUNE 30, 2023

SUBMITTAL / REVISIONS:

DATE	BY	SUBMITTAL / REVISION
03/22	JR	ODEQ SUBMITTAL
06/22	JR	ISSUED FOR BIDDING
07/22	JR	REVISED PER ADDENDUM NO. 1

SHAWNEE MUNICIPAL AUTHORITY
WASTEWATER SYSTEM IMPROVEMENTS
CONTRACT DOCUMENTS VOL. 4 OF 6 - NORTHSIDE WWTP

SLUDGE HANDLING FACILITY
FOUNDATION PLAN SECTION AND DETAILS

PROJECT NO.
SHN-20-01

DATE
06/22

DRAWN BY:
JR

CHECKED BY:
BW

REVIEWED BY:
DBW

SCALE:
AS SHOWN

BAR IS ONE INCH ON ORIGINAL DRAWING
0" 1"
IF NOT ONE INCH ON THIS SHEET, ADJUST SCALES ACCORDINGLY

SHEET

SHF-5

PLAN VIEW

SCALE: 3/4" = 1'-0"

WALL ENGINEERING
223 N. WASHINGTON AVE., DURANT, OK 74701
OKLAHOMA CA #6413 EXP. JUNE 30, 2023

SUBMITTAL / REVISIONS:

DATE	BY	SUBMITTAL / REVISION
03/22	JR	ODEQ SUBMITTAL
06/22	JR	ISSUED FOR BIDDING
07/22	JR	REVISED PER ADDENDUM NO. 1

SHAWNEE MUNICIPAL AUTHORITY
WASTEWATER SYSTEM IMPROVEMENTS
CONTRACT DOCUMENTS VOL. 4 OF 6 - NORTHSIDE WWTP

SLUDGE HANDLING FACILITY
BELT FILTER PRESS PLAN VIEW

PROJECT NO.
SHN-20-01

DATE
06/22

DRAWN BY:
JR

CHECKED BY:
BW

REVIEWED BY:
DBW

SCALE:
3/4"=1-0"

BAR IS ONE INCH ON ORIGINAL DRAWING
0" 1"
IF NOT ONE INCH ON THIS SHEET, ADJUST SCALES ACCORDINGLY

SHEET

SHF-6

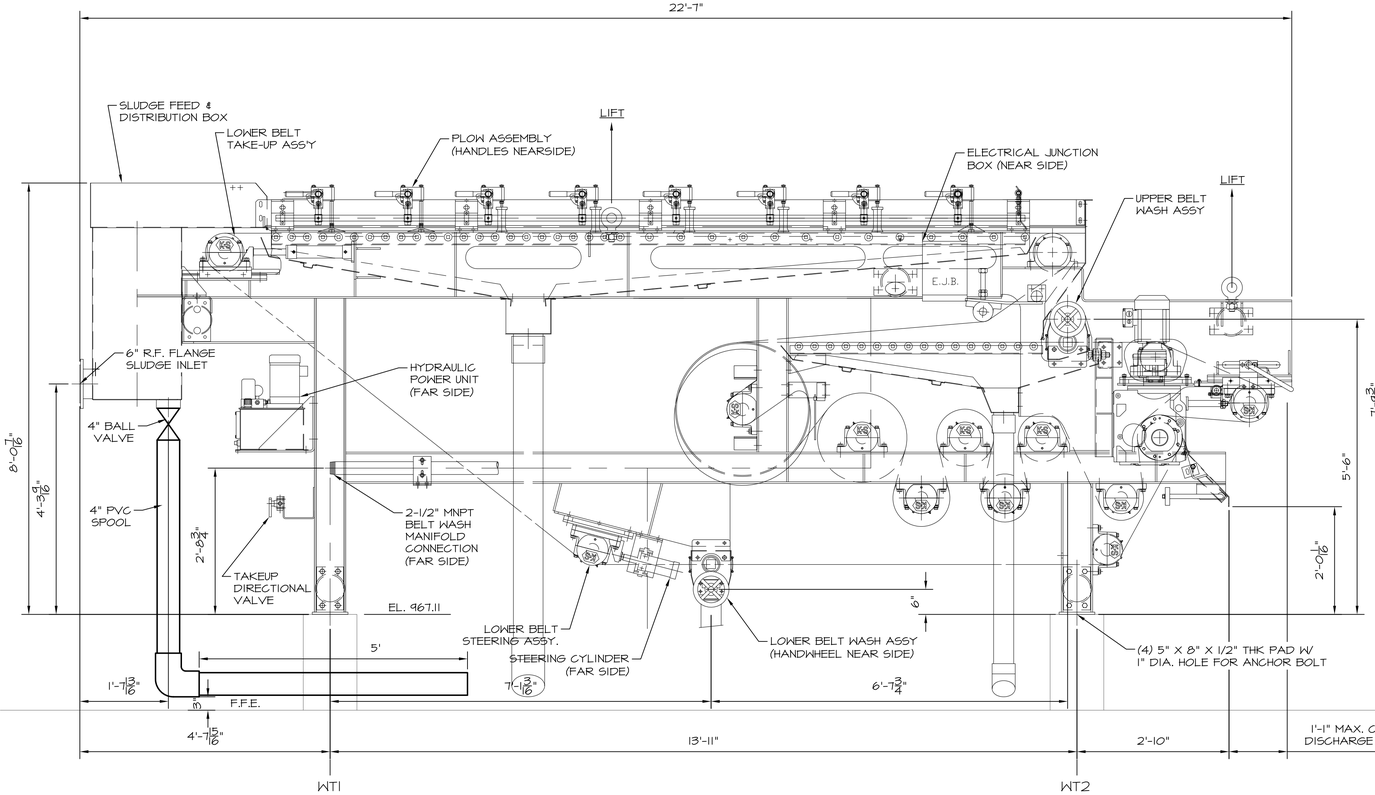

ELEVATION VIEW

SCALE: 3/4" = 1'-0"

NOTE:

1. ALL BELT PRESS DRAINS TO BE EXTENDED TO DRAIN.

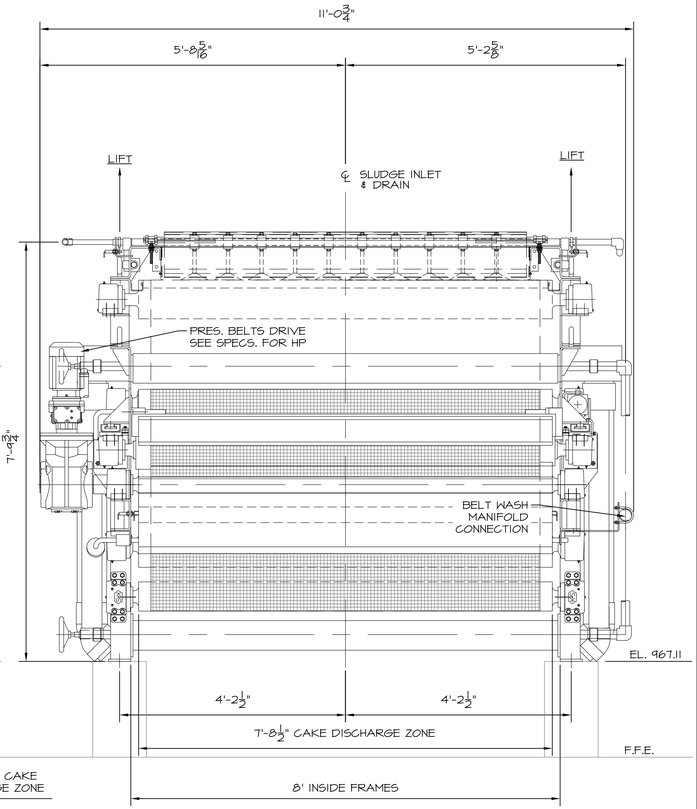

DISCHARGE END VIEW

SCALE: 3/4" = 1'-0"



WALL ENGINEERING
223 N. WASHINGTON AVE., DURANT, OK 74701
OKLAHOMA CA #5413 EXP. JUNE 30, 2023

SUBMITTAL / REVISIONS:

DATE	BY	SUBMITTAL / REVISION
03/22	JR	ODEQ SUBMITTAL
06/22	JR	ISSUED FOR BIDDING
07/22	JR	REVISED PER ADDENDUM NO. 1

SHAWNEE MUNICIPAL AUTHORITY
WASTEWATER SYSTEM IMPROVEMENTS
CONTRACT DOCUMENTS VOL. 4 OF 6 - NORTHSIDE WWTP

SLUDGE HANDLING FACILITY
BELT FILTER PRESS ELEVATION VIEWS

PROJECT NO.	SHN-20-01
DATE	06/22
DRAWN BY:	JR
CHECKED BY:	BW
REVIEWED BY:	DBW
SCALE:	3/4"=1-0"

BAR IS ONE INCH ON ORIGINAL DRAWING
0" 1"
IF NOT ONE INCH ON THIS SHEET, ADJUST SCALES ACCORDINGLY

SHEET

SHF-7

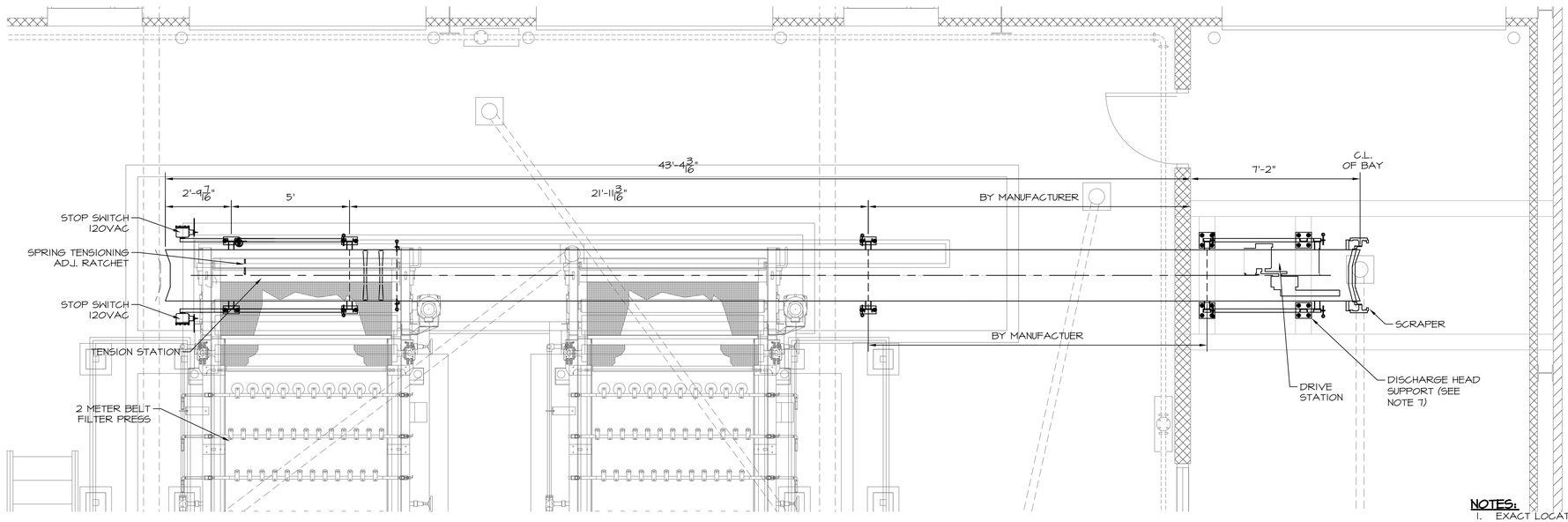

CONEYOR PLAN VIEW

SCALE: 3/8"=1'-0"

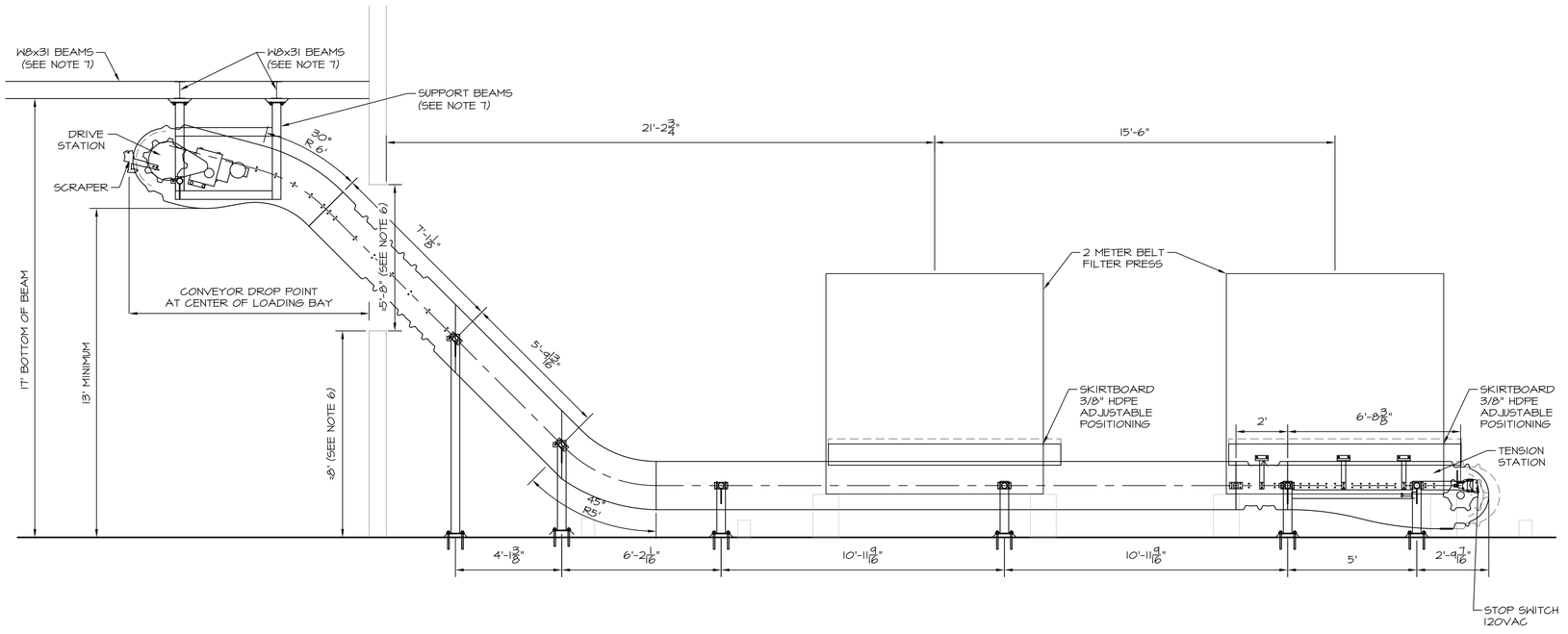

CONEYOR ELEVATION VIEW

SCALE: 3/8"=1'-0"

NOTES:

1. EXACT LOCATION OF CONVEYOR TO BE COORDINATED WITH BELT FILTER PRESS SUPPLIER PRIOR TO PLACEMENT.
2. POSITION CONVEYOR SUCH THAT THE ANTICIPATED SLUDGE DROP ZONE IS EXACTLY POSITIONED AS RECOMMENDED BY MANUFACTURER (NOT AT CENTERLINE).
3. CONVEYOR OPENING TO BE COVERED WITH A CLEAR HANGING SECTIONAL CLEAR PLASTIC SHROUD TO ASSIST IN MINIMIZING VENTING. SIZING OF SHROUDING SHALL BE FIELD DETERMINED.
4. EXACT PLACEMENT OF CONVEYOR BENEATH BELT FILTER PRESS DISCHARGE TO BE COORDINATED AND VERIFIED BY PRESS SUPPLIER PRIOR TO ANCHORING CONVEYOR.
5. COORDINATE WITH CONVEYOR SUPPLIER FOR CONNECTION OF SUPPORT BEAMS TO CONVEYOR DISCHARGE.
6. EXACT SIZE, HEIGHT AND LOCATION OF CONVEYOR WALL PENETRATION TO BE FIELD DETERMINED IN CONJUNCTION WITH MANUFACTURER BASED ON EXACT LAYOUT OF CONVEYOR.
7. CONNECTION OF CONVEYOR TO STRUCTURAL BEAMS INCLUDING CONNECTION OF BEAMS TO BUILDING STRUCTURAL SHOWN IN THE ARCHITECTURAL DRAWINGS TO BE STAMPED BY AN OKLAHOMA REGISTERED STRUCTURAL ENGINEER (S.E.).

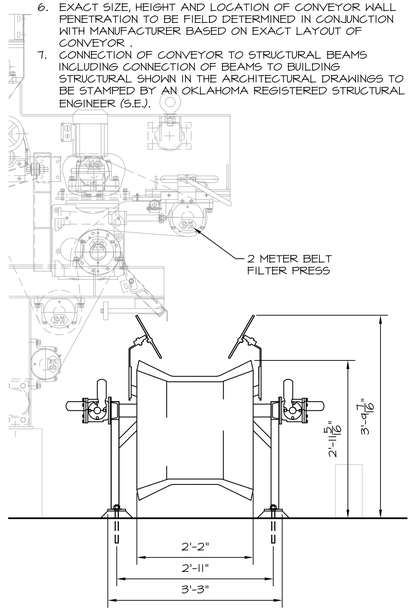

CONVEYOR END VIEW

SCALE: 3/4" = 1'-0"

WALL ENGINEERING
223 N. WASHINGTON AVE. DURANT, OK 74701
OKLAHOMA CA #5413 EXP. JUNE 30, 2023

REGISTERED PROFESSIONAL ENGINEER
BRANDON WALL
21108
OKLAHOMA

SUBMITTAL / REVISIONS:

DATE	BY	SUBMITTAL / REVISION
03/22	JR	ODEQ SUBMITTAL
06/22	JR	ISSUED FOR BIDDING
07/22	JR	REVISED PER ADDENDUM NO. 1

SHAWNEE MUNICIPAL AUTHORITY
WASTEWATER SYSTEM IMPROVEMENTS
CONTRACT DOCUMENTS VOL. 4 OF 6 - NORTHSIDE WWTP

SLUDGE HANDLING FACILITY
CONVEYOR PLAN AND ELEVATIONS

PROJECT NO. SHN-20-01
DATE 06/22
DRAWN BY: JR
CHECKED BY: BW
REVIEWED BY: DBW
SCALE: 1/4"=1'-0"

BAR IS ONE INCH ON ORIGINAL DRAWING
0" 1"
IF NOT ONE INCH ON THIS SHEET, ADJUST SCALES ACCORDINGLY

SHEET
SHF-8

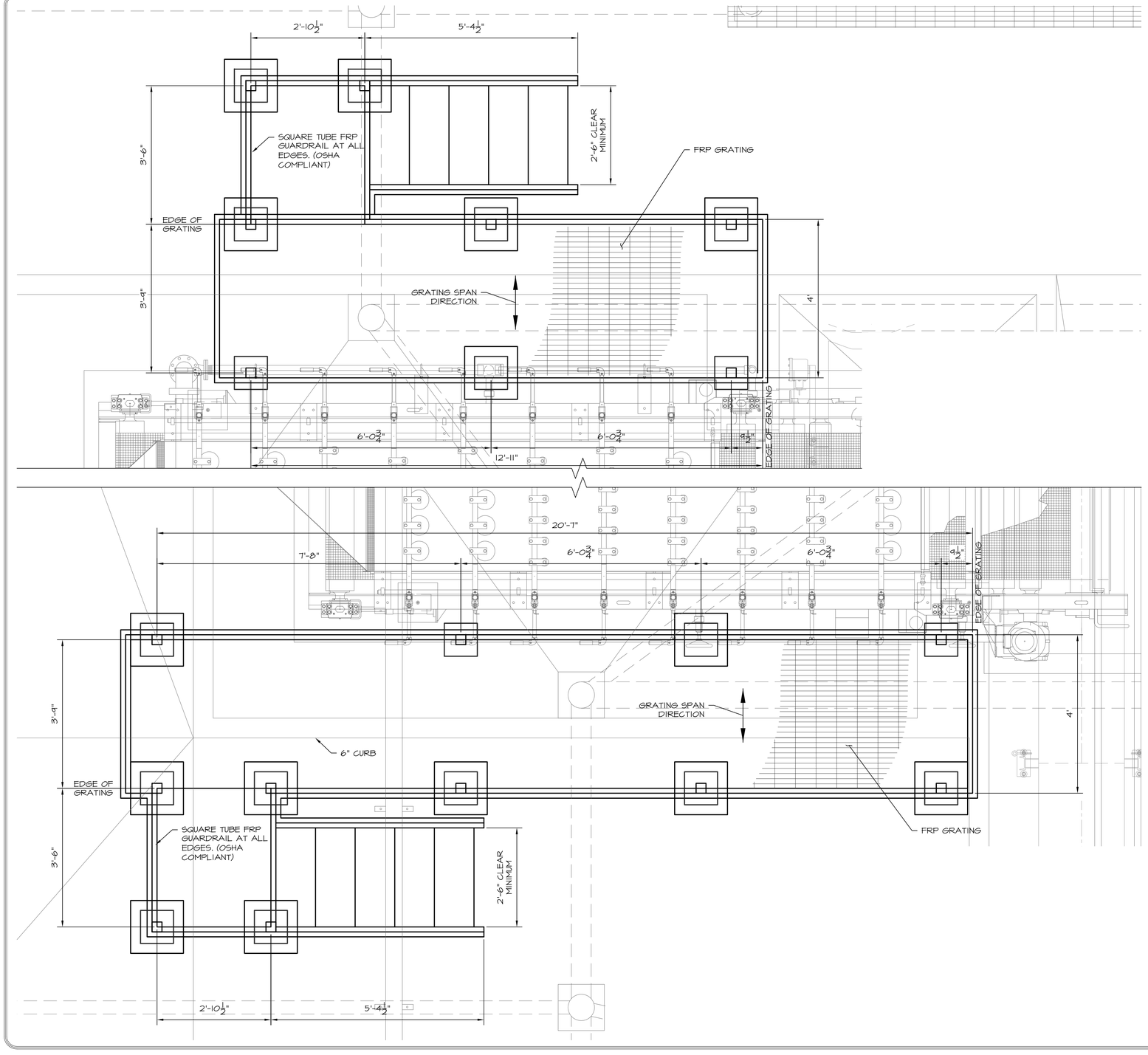

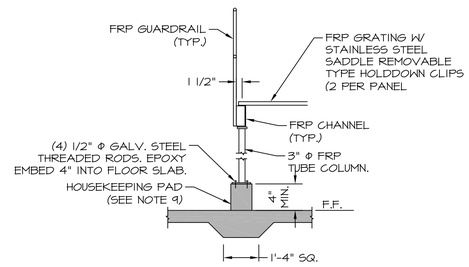

SECTION THRU ELEVATED WALKWAY

N.T.S.

NOTES:

1. ALL FRAMING MEMBERS SHALL BE FRP CHANNELS ALL COLUMNS SHALL BE 3" FRP TUBES (MIN).
2. SUPPLIER OF FRP WALKWAY SHALL DESIGN ALL MEMBER SIZES AND DETAIL ALL CONNECTIONS.
3. DESIGN LOADS: (GRATING AND FRAME)
   A. 100 PSF UNIFORM OR 300# CONCENTRATED LOAD PER LINEAL FOOT AT MIDSPAN (MAXIMUM).
   B. MAXIMUM DEFLECTION = 0.25 INCHES.
   C. FACTOR OF SAFETY:
      BENDING = 3.0
      SHEAR = 4.0
      COMPRESSION = 3.0
      CONNECTIONS = 4.0
4. ALL FASTENERS SHALL BE GALVANIZED STEEL.
5. WALKWAY GRATING TO BE REMOVABLE IN 6 FOOT NOMINAL LENGTH SECTIONS. REMAINING STRUCTURE TO BE STABLE AND USABLE UNDER FULL LIVE LOAD.
6. WALKWAY SUBMITTAL SHALL BE STAMPED BY A STRUCTURAL ENGINEER (S.E.) LICENSED IN OKLAHOMA.
7. SIZING IS FOR REFERENCE ONLY & MAY BE MODIFIED DURING STRUCTURAL DESIGN.
8. SUBMITTAL TO INCLUDE FULL STRUCTURAL DESIGN (INCLUDING ANCHORING) AND CLEARLY SHOW RELATIONSHIP BETWEEN PRESS AND WALKWAY IN BOTH PLAN & SECTION VIEWS.
9. COORDINATE HEIGHT OF FOOTING SUPPORTS/PADS SUCH THAT THEY INTERACT PROPERLY AND EVENLY WITH STEPS.
10. COORDINATE EXACT HEIGHT AND LAYOUT OF PLATFORM WITH BELT FILTER PRESS SUPPLIER/MANUFACTURER.



WALL ENGINEERING
223 N. WASHINGTON AVE. DURANT, OK 74701
OKLAHOMA CA #5413 EXP. JUNE 30, 2023

SUBMITTAL / REVISIONS:

DATE	BY	SUBMITTAL / REVISION
03/22	JR	ODEQ SUBMITTAL
06/22	JR	ISSUED FOR BIDDING
07/22	JR	REVISED PER ADDENDUM NO. 1

SHAWNEE MUNICIPAL AUTHORITY
WASTEWATER SYSTEM IMPROVEMENTS
CONTRACT DOCUMENTS VOL. 4 OF 6 - NORTHSIDE WWTP

SLUDGE HANDLING FACILITY
WALKWAY PLAN AND DETAILS

PROJECT NO.	SHN-20-01
DATE	06/22
DRAWN BY:	JR
CHECKED BY:	BW
REVIEWED BY:	DBW
SCALE:	AS NOTED

BAR IS ONE INCH ON ORIGINAL DRAWING
0" 1"
IF NOT ONE INCH ON THIS SHEET, ADJUST SCALES ACCORDINGLY

SHEET

SHF-9

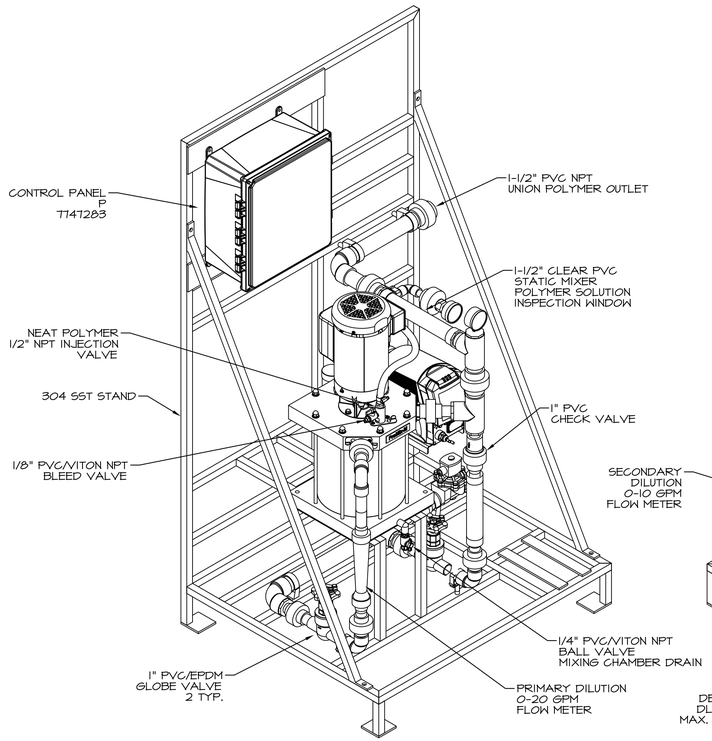

LEFT ISOMETRIC VIEW

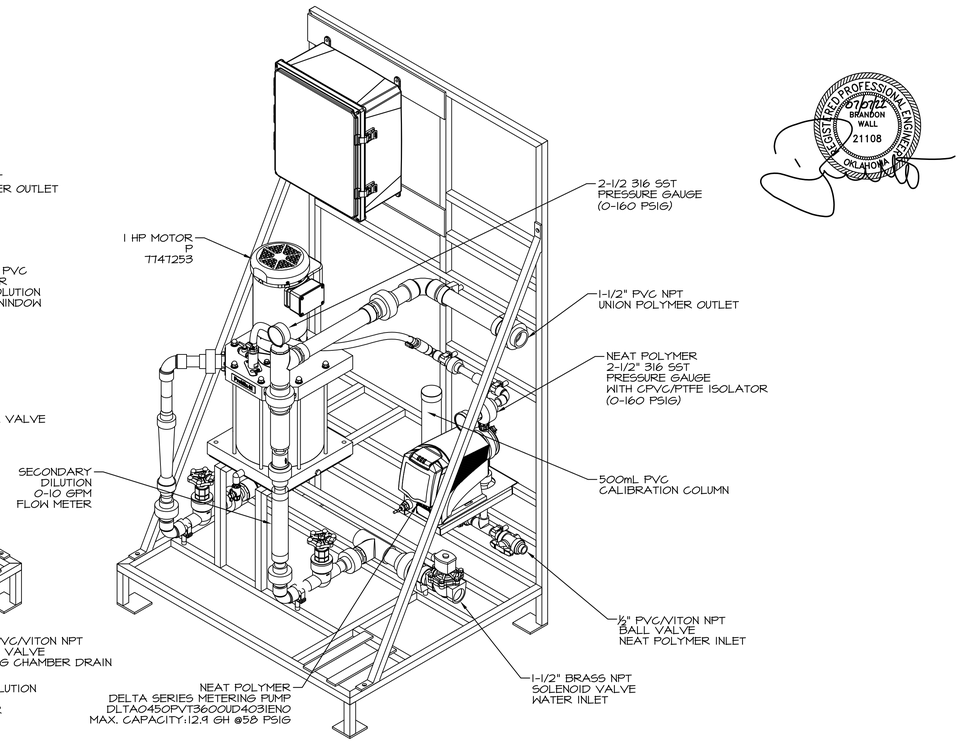

RIGHT ISOMETRIC VIEW

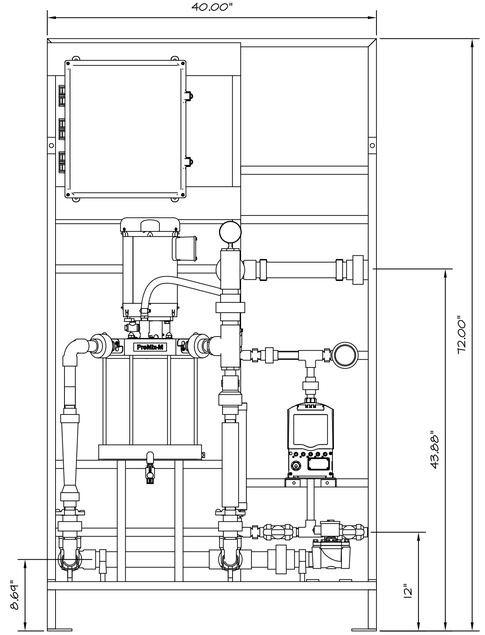

FRONT VIEW

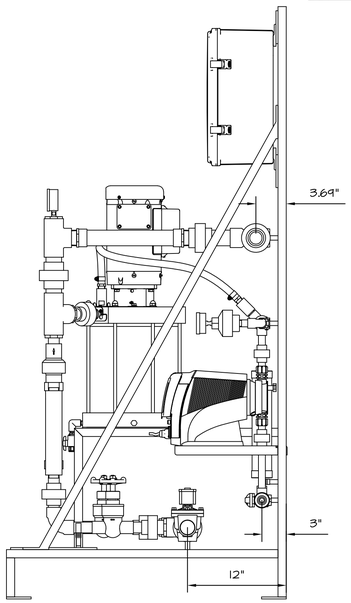

SIDE VIEW

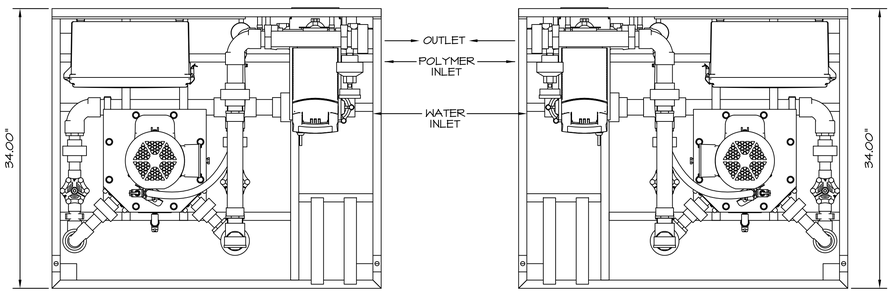

RIGHT OUTLET PLAN VIEW

LEFT OUTLET PLAN VIEW

NOTE:
1. CONTRACTOR TO FURNISH 1-RIGHT OUTLET POLYMER SYSTEM SKID AND 1-LEFT OUTLET POLYMER SYSTEM SKID WITH SPARE PARTS AS OUTLINED IN THE SPECIFICATIONS.
2. SUPPLIER OF POLYMER FEED SYSTEM TO COORDINATE WITH BELT FILTER PRESS MANUFACTURER TO VERIFY PUMP SIZING AND FLOW CONDITIONS.
3. EXACT LOCATION OF PIPING MAY BE FIELD ADJUSTED BASED ON LOCATIONS OF PROPOSED EQUIPMENT AND APPURTENANCES.
4. ALL POTABLE WATER AND NON POTABLE WATER INSIDE BUILDING SHALL BE STAINLESS STEEL (GR) UNLESS OTHERWISE NOTED.
5. ALL CHEMICALS REQUIRED FOR STARTUP AND INITIAL OPERATIONS SHALL BE THE RESPONSIBILITY OF THE CONTRACTOR.
6. CONTRACTOR SHALL PROVIDE TWO (2) 275 GALLON CHEMICAL TOTES WITH INTEGRAL CHEMICAL TRANSFER SYSTEM, MIXER AND ADEQUATE ½" HOSE AND VALVES AS REQUIRED TO CONNECT BOTH TOTES TO RESPECTIVE CHEMICAL FEED SYSTEMS AND MAINTAIN FLOODED SUCTION AT ALL TIMES TO POLYMER FEED SYSTEM.

REGISTERED PROFESSIONAL ENGINEER
BRANDON WALL
21108
OKLAHOMA
06/30/23

WALL ENGINEERING
223 N. WASHINGTON AVE. DURANT, OK 74701
OKLAHOMA CA #5413 EXP. JUNE 30, 2023

SUBMITTAL / REVISIONS:

DATE	BY	SUBMITTAL / REVISION
03/22	JR	ODEQ SUBMITTAL
06/22	JR	ISSUED FOR BIDDING
07/22	JR	REVISED PER ADDENDUM NO. 1

SHAWNEE MUNICIPAL AUTHORITY
WASTEWATER SYSTEM IMPROVEMENTS
CONTRACT DOCUMENTS VOL. 4 OF 6 - NORTHSIDE WWTP

SLUDGE HANDLING FACILITY
POLYMER FEED SYSTEM DETAIL

PROJECT NO.
SHN-20-01
DATE
06/22
DRAWN BY:
JR
CHECKED BY:
BW
REVIEWED BY:
DBW
SCALE:
1/2"=1'-0"

BAR IS ONE INCH ON ORIGINAL DRAWING
0" 1"
IF NOT ONE INCH ON THIS SHEET, ADJUST SCALES ACCORDINGLY

SHEET
SHF-10

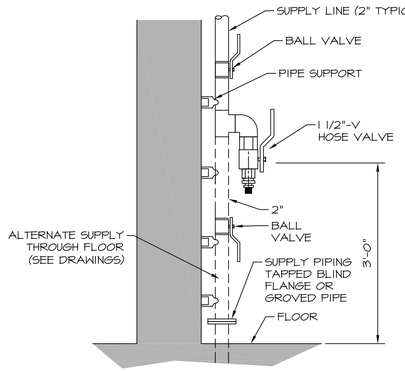

NOTE:

1. ROTATE HOSE VALVE 30° OFF WALL.
2. SUPPLY WALL MOUNTED HOSE RACKETS ADJACENT AT ALL HOSE VALVES.
3. PROVIDE WARNING SIGN PER DETAIL SHEETS
4. CONTRACTOR SHALL PROVIDE A $\frac{3}{4}$" AND 1-$\frac{1}{2}$" THREADED OUTLET WITH CAMLOK QUICK DISCONNECT ADAPTERS AND VALVE ON EACH YARD HYDRANT IN ADDITION TO THE 2" HYDRANT VALVE. YARD HYDRANT SHALL BE Z1340 SERIED OR APPROVED EQUAL.

INTERIOR HOSE VALVE DETAIL
N.T.S

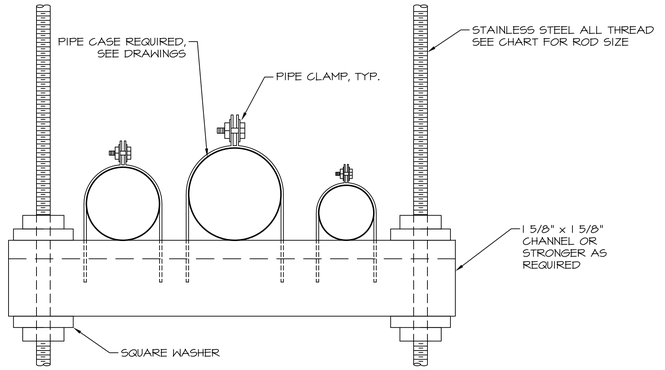

TRAPEZE PIPE SUPPORT
N.T.S

ALL THREAD MINIMUM SUPPORT ROD SIZE							
PIPE SIZE	≤ 6"	8"	10"-12"	14"	16"-18"	20"	24"
ALL-THREAD SIZE	3/8"	1/2"	5/8"	3/4"	7/8"	1"	1-1/4"

STEEL AND DUCTILE IRON SUPPORT SPACING (MAX.)							
PIPE SIZE	≤ 1"	1$\frac{1}{4}$" - 2 $\frac{1}{2}$"	3"-4"	6"-8"	10"-12"	14"-18"	20"-24"
SPACING (FEET)	6	8	10	12	14	16	18

STAINLESS STEEL SUPPORT SPACING				
PIPE SIZE	1"-6"	8"-12"	14"-16"	18"-24"
SPACING (FEET)	8	10	12	14

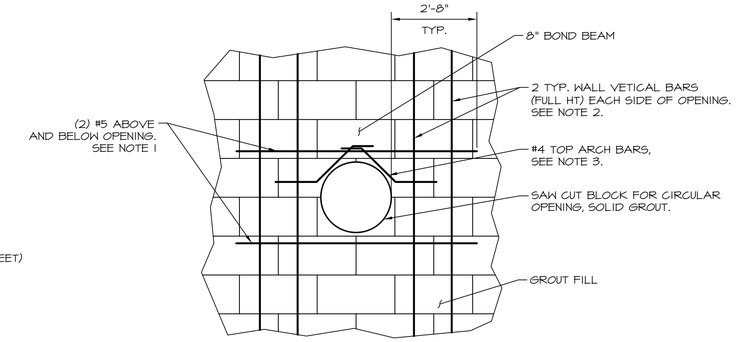

CMU PIPE OPENING REINFORCEMENT
N.T.S

NOTES:

1. AT ADJACENT OPENING WITH LESS THAN 8'-0" WALL BETWEEN, CONTINUE HORIZONTAL REINFORCING TO 2'-8" BEYOND FURTHEST OPENING.
2. LOCATE VERTICAL BARS CENTERED IN 2 ADJACENT CELLS IN 8" WALLS AND EACH FACE IN SINGLE CELL IN 12" WALLS. LAP 48 BAR DIAMETERS WITH MATCHING FOUNDATION DOWELS.
3. LOCATE #4 ARCH BARS CENTERES IN 8" WALLS, AND EACH FACE IN 12" WALLS.

NOTES:

1. NUMBER OF ADDITIONAL REINF. BARS AT EACH SIDE OF OPENING SHALL EQUAL HALF THE NUMBER OF INTERRUPTED BARS IN EACH LAYER OF REINF.
2. SIZE OF ADDITIONAL REINF. BARS TO EQUAL SIZE OF INTERRUPTED REINF. BARS.
3. PROVIDE STD HOOKS FOR BARS IF LAP LENGTH EXTENSION CANNOT BE OBTAINED AT JOINTS OR OTHER OBSTRUCTIONS. PLACE ADDITIONAL BARS IN SAME PLANES AS INTERRUPTED REINF.
4. UNLESS NOTED OTHERWISE, SIZE OF DIAGONAL BARS SHALL BE THE SAME SIZE AS THE INTERRUPTED NORMAL REINF. LOCATE DIAGONALS IN EACH LAYER OF REINF.
5. PLACE DIAGONAL BARS INSIDE NORMAL REINF
6. PROVIDE 2 DIAGONAL BARS EACH LAYER OR FACE, EACH WAY AS SHOWN.
7. ALL REINF. TO CLEAR OPENING OR FLANGE COLLARS BY 2".

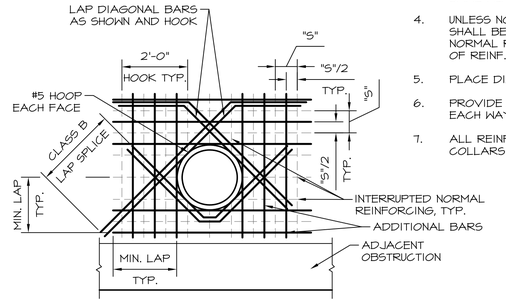

ADDITIONAL REINFORCEMENT @ OPENINGS IN WALLS
N.T.S

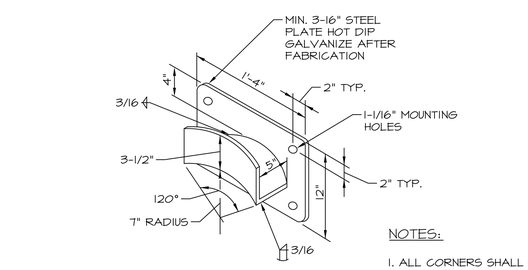

NOTES:

1. PROVIDE 1", 25' COMMERCIAL HOSE WITH SST SPRAYER AT ALL LOCATIONS UNLESS OTHERWISE NOTED.

WALL MOUNTED UTILITY STATION
N.T.S

NOTES:

1. ALL CORNERS SHALL HAVE A 3/4" RADIUS
2. HOSE RACKS TO BE MOUNTED AT ALL HYDRANTS ADJACENT TO BUILDING/STRUCTURES.
3. LOCATION TO BE FIELD DETERMINED.

HOSE RACK
N.T.S

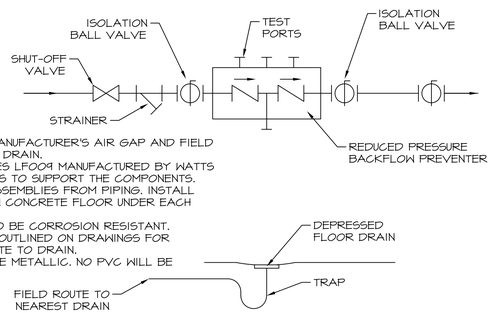

NOTES

1. INSTALL RPZ WITH MANUFACTURER'S AIR GAP AND FIELD ROUTE FULL-SIZE TO DRAIN.
2. RPZ SHALL BE SERIES LF009 MANUFACTURED BY WATTS
3. INSTALL PIPE STANDS TO SUPPORT THE COMPONENTS. DO NOT SUPPORT ASSEMBLIES FROM PIPING. INSTALL BEARING PLATES ON CONCRETE FLOOR UNDER EACH SUPPORT.
4. ALL COMPONENTS TO BE CORROSION RESISTANT.
5. DRAIN MAY NOT BE OUTLINED ON DRAWINGS FOR CLARITY. FIELD ROUTE TO DRAIN.
6. ALL PIPING SHALL BE METALLIC. NO PVC WILL BE PERMITTED.

RPZ RISER (INTERIOR)
N.T.S.

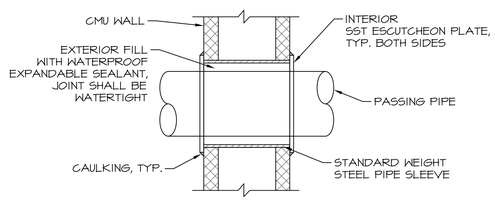

CMU WALL PIPE PENETRATION
N.T.S



WALL ENGINEERING
223 N. WASHINGTON AVE. DURANT, OK 74701
OKLAHOMA CA #5413 EXP. JUNE 30, 2023

SUBMITTAL / REVISIONS:

DATE	BY	SUBMITTAL / REVISION
03/22	JR	ODEQ SUBMITTAL
06/22	JR	ISSUED FOR BIDDING
07/22	JR	REVISED PER ADDENDUM NO. 1

SHAWNEE MUNICIPAL AUTHORITY
WASTEWATER SYSTEM IMPROVEMENTS
CONTRACT DOCUMENTS VOL. 4 OF 6 - NORTHSIDE WWTP

MISCELLANEOUS DETAILS

PROJECT NO.	SHN-20-01
DATE	06/22
DRAWN BY:	JR
CHECKED BY:	TA
REVIEWED BY:	DBW
SCALE:	AS NOTED

BAR IS ONE INCH ON ORIGINAL DRAWING
0" 1"
IF NOT ONE INCH ON THIS SHEET, ADJUST SCALES ACCORDINGLY

SHEET

DT-5

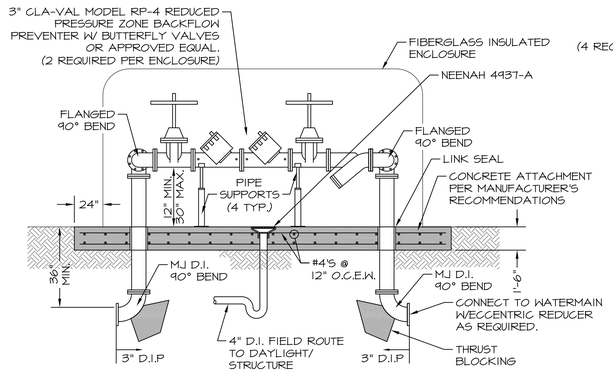

SIDE VIEW

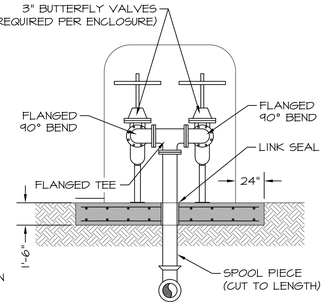

END VIEW

BACKFLOW PREVENTER

N.T.S

NOTES:

1. INSTALL INSIDE INSULATED FIBERGLASS ENCLOSURE, SUBMITTAL REQUIRED.
2. ENCLOSURE TO HAVE ACCESS DOORS ON EACH SIDE.
3. SLOPE FLOOR TO DRAIN WITH CHECK VALVE WHERE NECESSARY (TIDE FLEX)
4. ALL CONNECTIONS SHALL BE THRUST RESTRAINED.

MINIMUM RESTRAINED LENGTH (FT) FOR A TEST PRESSURE OF 100 PSIG						
NOMINAL PIPE SIZE	90 DEGREE	WYE OR 45 DEGREE	22-1/2 DEGREE	11-1/4 DEGREE	TEE BRANCH	TERMINAL PLUG
6	23	18	18	18	39	59
8	30	18	18	18	51	6'-4"
10	36	18	18	18	61	92
12	41	18	18	18	71	107
20	62	26	18	18	110	164
24	72	30	18	18	128	192
30	85	35	18	18	152	228
36	96	40	18	18	175	262
48	118	48	23	18	214	322
54	131	54	26	18	348	344

NOTES:

1. RESTRAIN ALL DUCTILE IRON FITTINGS.
2. TABULATED VALUES ARE FOR 100 PSIG TEST PRESSURE. FOR VALUES AT PRESSURES OTHER THAN 100 PSID, MULTIPLY TABLE VALUES BY THE RATIO OF ACTUAL TEST PRESSURE TO 100 PSIG. TEST PRESSURES FOR EACH SERVICE ARE DEFINED IN THE PIPING SCHEDULE.
3. WHERE LISTED VALUES, OR CALCULATED VALUES (SEE ABOVE), ARE LESS THAN ON STANDARD FULL PIPE SEGMENT (18 FEET), RESTRAIN THE FITTING ONLY.
4. RESTRAINT LENGTHS APPLY TO PIPE RUNS ON EACH SIDE OF A CHANGE IN DIRECTION.
5. WHERE THE PIPING LAYOUT HAS RESTRAINED JOINT LENGTHS FOR TWO OR MORE FITTINGS TO OVERLAP, THRUST RESTRAIN ALL PIPING BETWEEN THE OTHER FITTINGS, ASSUME 1/2 OF THE RESTRAINED PIPE LENGTH BETWEEN THE TWO FITTINGS RESTRAINS EACH OF THE FITTINGS AND ADD ADDITIONAL RESTRAINED JOINT LENGTH TO THE OUTER LEGS OF THE OUTER FITTINGS TO EQUAL THE TOTAL REQUIRED FOR ALL FITTINGS.
6. THRUST RESTRAINT TABLE REFERS TO NEW PIPING.

BURIED DUCTILE IRON PIPE THRUST RESTRAINT TABLE

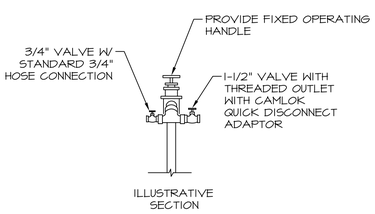

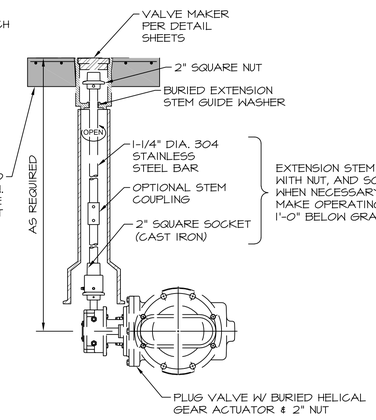

BURIED MANUAL PLUG VALVE

N.T.S

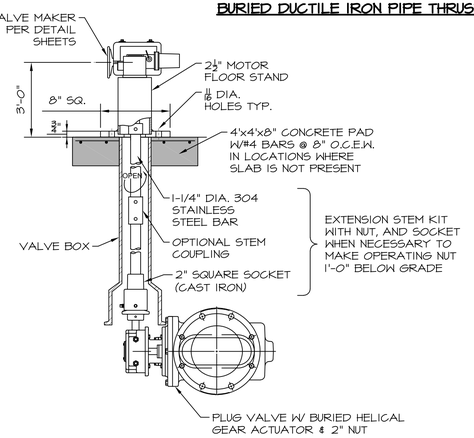

BURIED ELECTRICALLY ACTUATED PLUG VALVE

N.T.S

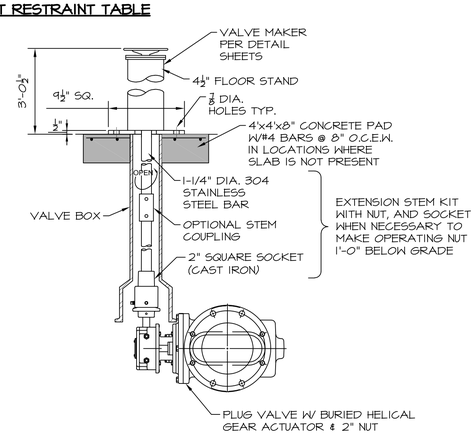

BURIED VALVE WITH PEDESTAL MOUNTED OPERATOR

N.T.S

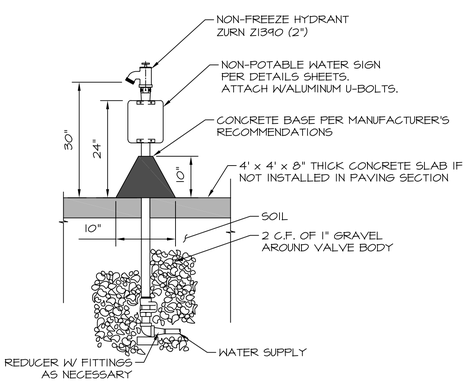

NOTES:

1. ALL HYDRANTS SHALL BE PROVIDED W/ HOSE RACK.
2. SIGN IS ROTATED FOR CLARITY, ORIENTATION SHALL BE VISIBLE FROM FRONT OF HYDRANT.
3. CONTRACTOR SHALL PROVIDE A 3/4" AND 1-1/2" THREADED OUTLET WITH CAMLOK QUICK DISCONNECT ADAPTERS AND VALVE ON EACH YARD HYDRANT IN ADDITION TO THE 2" HYDRANT VALVE. YARD HYDRANT SHALL BE ZURN Z1390 SERIED OR APPROVED EQUAL.
4. YARD HYDRANTS LOCATED NEXT TO STRUCTURES SHALL BE SECURELY MOUNTED TO THE STRUCTURES WITH STAINLESS STEEL FASTENERS.
5. YARD HYDRANTS SHALL BE PROVIDED WITH WHEEL TYPE HANDLE.
6. PROVIDE CASING GUARD AROUND YARD HYDRANT ABOVE GRADE SURFACE.
7. HYDRANT SHALL BE DESIGNATED WITH A "NON-POTABLE WATER" SIGN. SEE DETAIL SHEETS.

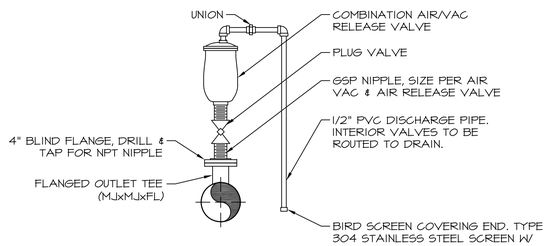

AIR VACUUM & RELEASE VALVE (3" & SMALLER)

N.T.S

NOTES:

1. VALVE SIZE SHALL BE AS INDICATED ON THE DRAWINGS.
2. SERVICE TAP & PLUG VALVE SHALL MATCH VALVE INLET SIZE.
3. FIELD ROUTE DISCHARGE PIPE TO DRAIN/DAYLIGHT.



WALL ENGINEERING
223 N. WASHINGTON AVE. DURANT, OK 74701
OKLAHOMA CA #5413 EXP. JUNE 30, 2023

SUBMITTAL / REVISIONS:

DATE	BY	SUBMITTAL / REVISION
03/22	JR	ODEQ SUBMITTAL
06/22	JR	ISSUED FOR BIDDING
07/22	JR	REVISED PER ADDENDUM NO. 1

SHAWNEE MUNICIPAL AUTHORITY
WASTEWATER SYSTEM IMPROVEMENTS - NORTHSIDE WWTP
CONTRACT DOCUMENTS VOL. 4 OF 6 - MISCELLANEOUS DETAILS

MISCELLANEOUS DETAILS

PROJECT NO. SHN-20-01
DATE 06/22
DRAWN BY: JR
CHECKED BY: TA
REVIEWED BY: DBW
SCALE: AS NOTED

BAR IS ONE INCH ON ORIGINAL DRAWING
0" 1"
IF NOT ONE INCH ON THIS SHEET, ADJUST SCALES ACCORDINGLY

SHEET

DT-7

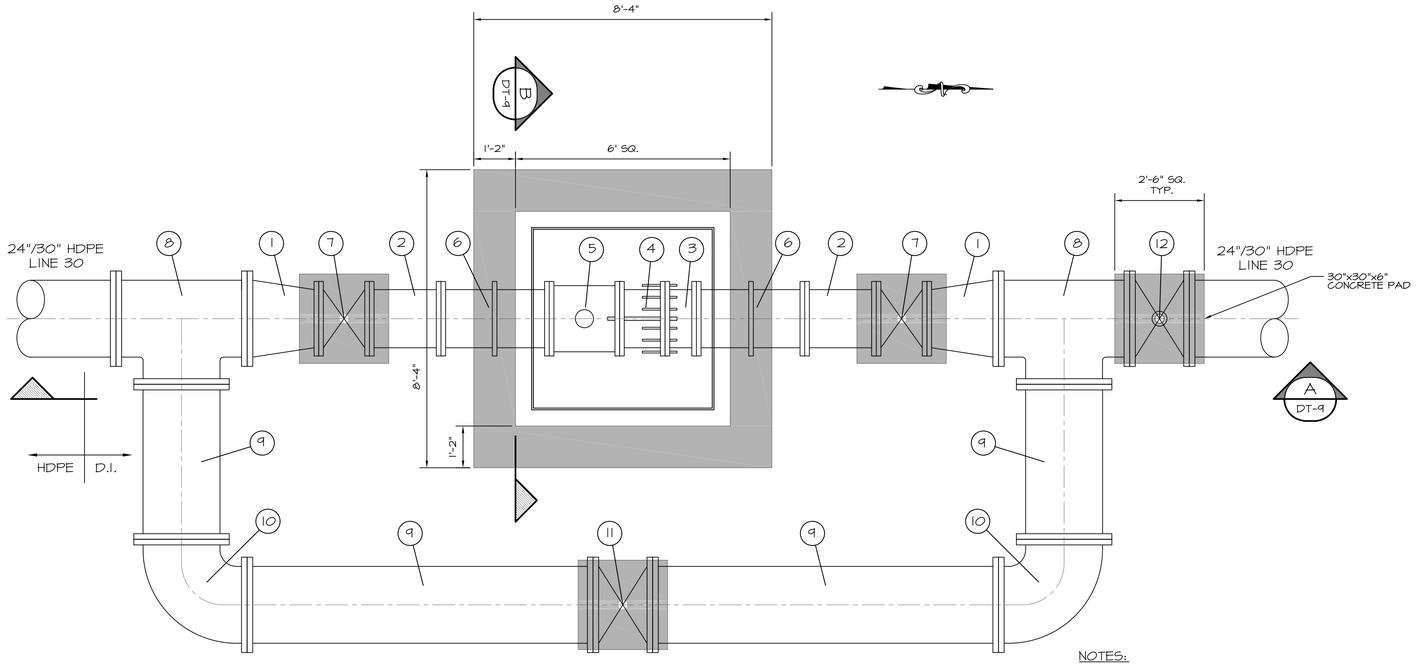

24" PIPING SCHEDULE STRUCTURE	
NO.	ITEM
1	18"x24" ECCENTRIC REDUCER, MJ
2	18" D.I. SPOOL, MJ
3	18" D.I. SPOOL, FLxFL
4	18" D.I. DISMANTLING JOINT, FLxFL
5	18" ELECTROMAGNETIC FLOW METER, FLxFL
6	18" WALL PIPE, FLxMJ
7	18" PLUG VALVE, MJ
8	24"x24"x24" D.I. TEE, MJ
9	24" D.I. SPOOL
10	24" 90° BEND, MJ
11	24" PLUG VALVE, MJ
12	24" ELECTRONICALLY ACTUATED PLUG VALVE, MJ
13	4" D.I.
14	4" D.I.
15	FLOOR DRAIN (NEENAH 4937-A)
16	PIPE SUPPORT

30" PIPING SCHEDULE STRUCTURE	
NO.	ITEM
1	18"x30" ECCENTRIC REDUCER, MJ
8	30"x30"x30" D.I. TEE, MJ
9	30" D.I. SPOOL
10	30" 90° BEND, MJ
11	30" PLUG VALVE, MJ
12	30" ELECTRONICALLY ACTUATED PLUG VALVE, MJ

NOTES:

1. FIELD ROUTE SCH. 80 PVC DRAIN PIPE TO NEAREST STRUCTURE DAYLIGHT/MANHOLE WITH 4" TIDEFLEX CHECK VALVE.
2. ACCESS HATCH TO BE TRAFFIC RATED.
3. CONTRACTOR SHALL SUBMIT A PIPING PLAN SHOWING DETAILED PIPING, VALVES, AND MAG METER DIMENSIONS. BOLTS AT FLANGES SHALL BE EASILY ACCESSIBLE.
4. ADJUST VAULT SIZE FOR CLEARANCE AS REQUIRED.

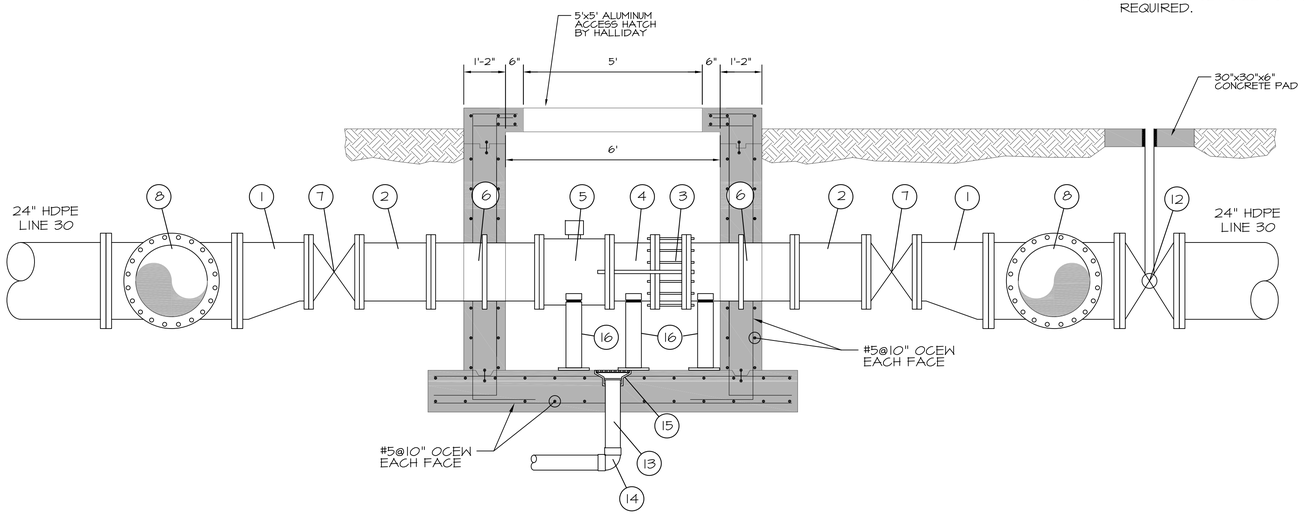

A DT-9 SECTION
SCALE: 1/2"=1'-0"

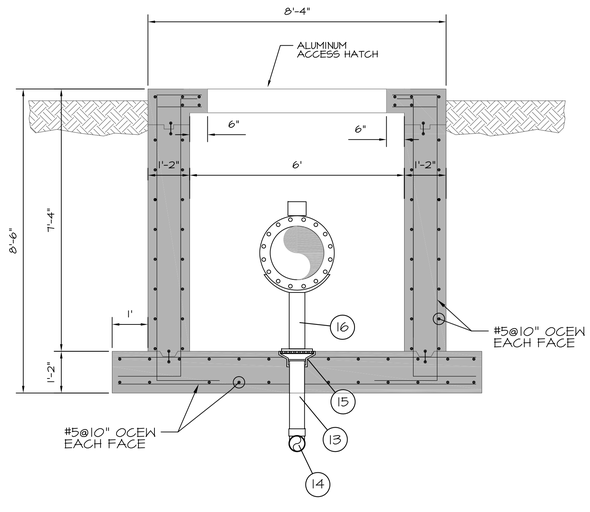

B DT-9 SECTION
SCALE: 1/2"=1'-0"

REGISTERED PROFESSIONAL ENGINEER
BRANDON WALL
21108
OKLAHOMA

WALL ENGINEERING
223 N. WASHINGTON AVE, DURANT, OK 74701
OKLAHOMA CA #5413 EXP. JUNE 30, 2023

SUBMITTAL / REVISIONS:

DATE	BY	SUBMITTAL / REVISION
03/22	JR	ODEQ SUBMITTAL
06/22	JR	ISSUED FOR BIDDING
07/22	JR	REVISED PER ADDENDUM NO. 1

SHAWNEE MUNICIPAL AUTHORITY
WASTEWATER SYSTEM IMPROVEMENTS
CONTRACT DOCUMENTS VOL. 4 OF 6 - NORTHSIDE WWTP

MAG METER VAULT
MECHANICAL PLAN, SECTION AND SCHEDULES

PROJECT NO.
SHN-20-01
DATE
06/22
DRAWN BY:
TL
CHECKED BY:
JR
REVIEWED BY:
DBW
SCALE:
1/2"=1'-0"

BAR IS ONE INCH ON ORIGINAL DRAWING
0" 1"
IF NOT ONE INCH ON THIS SHEET, ADJUST SCALES ACCORDINGLY

SHEET
DT-9

GENERAL

1. ALL NOTES LISTED ON THIS SHEET APPLY TO ALL SHEETS OF THE DRAWINGS AS IF THEY WERE WRITTEN ON EACH SHEET.
2. NOTIFY OWNER 48 HOURS PRIOR TO CONSTRUCTION.
3. VERIFY ALL EXISTING CONDITIONS AND OBSTRUCTIONS INCLUDING LOCATION AND DIMENSIONS BEFORE STARTING WORK AND SHALL NOTIFY THE ENGINEER OF ANY DISCREPANCIES.
4. PRIOR TO INSTALLATION OF RELEVANT FACILITIES CONTRACTOR SHALL, AT HIS OWN EXPENSE, UNCOVER AND OTHERWISE DETERMINE THE DEPTH OF UTILITIES WHICH, IN HIS OPINION, COULD INTERFERE WITH CONSTRUCTION.
5. ALL DIMENSIONS SHALL BE CONFIRMED BY THE CONTRACTOR ACCORDING TO ACTUAL FIELD CONDITIONS OR EQUIPMENT/STRUCTURE REQUIREMENTS.
6. ALL MISCELLANEOUS REMOVAL ITEMS REQUIRED FOR CONSTRUCTION SHALL BE FIELD LOCATED BY THE CONTRACTOR PRIOR TO BIDDING. THESE ITEMS WILL NOT BE MEASURED FOR PAYMENT AND SHALL BE INCLUDED IN THE PRICE BID FOR ASSOCIATED ITEMS OF WORK.
7. TRAFFIC CONTROL DEVICES SHALL BE FURNISHED AND MAINTAINED BY THE CONTRACTOR THROUGHOUT THIS PROJECT IN ACCORDANCE WITH THE LATEST VERSION OF THE MANUAL OF UNIFORM TRAFFIC CONTROL DEVICES AND/OR AS REQUIRED BY THE DEPARTMENT OF TRANSPORTATION OR COUNTY PERMITS FOR CONSTRUCTION IN RIGHT-OF-WAY.
8. SUBMIT AN EROSION CONTROL PLAN (SWPPP) PRIOR TO CONSTRUCTION AND SHALL MAINTAIN SWPPP THROUGHOUT DURATION OF CONSTRUCTION IN ACCORDANCE WITH SPECIFICATIONS.
9. EXISTING FACILITY AND UTILITY INFORMATION SHOWN ON THE DRAWINGS WAS OBTAINED FROM AVAILABLE RECORDS, LOCATES, AND AVAILABLE FILES. NEITHER THE OWNER NOR THE ENGINEER ASSUMES ANY RESPONSIBILITY FOR FACILITIES AND UTILITIES NOT SHOWN OR NOT IN THE LOCATION SHOWN. THE CONTRACTOR SHALL FIELD VERIFY ALL LOCATIONS, SIZES, MATERIALS, TYPES, AND ELEVATIONS SHOWN AROUND OR NEAR AREAS OF CONSTRUCTION PRIOR TO THE START OF CONSTRUCTION.
10. PERFORM ALL WORK WITHIN DESIGNATED EASEMENTS. CONTRACTOR SHALL NOT ENCROACH OR TRESPASS INTO PRIVATE PROPERTY WITHOUT WRITTEN APPROVAL FROM THE PROPERTY OWNER.
11. MAINTAIN LOCAL AND THROUGH TRAFFIC FOR ALL STREETS AT ALL TIMES WITHOUT CLOSURES OR RESTRICTIONS EXCEPT AS PART OF THE TRAFFIC CONTROL PLAN.
12. MAINTAIN REASONABLE ACCESS TO ALL PROPERTIES AT ALL TIMES. DO NOT RESTRICT DRIVEWAY ACCESS WITHOUT OWNER'S APPROVAL. RESTORE DRIVEWAY ACCESS AT THE END OF EACH DAY. PROVIDE TEMPORARY MEASURES AS NEEDED (SUCH AS GRAVEL) TO MAINTAIN DRIVEWAY ACCESS.
13. KEEP ACCURATE RECORDS OF ALL CONSTRUCTION THAT DEVIATES FROM THE DRAWINGS. THE CONTRACTOR SHALL FURNISH TO THE ENGINEER ACCURATE "AS-BUILT" RED LINE DRAWINGS FOLLOWING COMPLETION OF CONSTRUCTION.
14. TAKE SPECIAL PRECAUTIONS IN THE VICINITY OF ANY OVERHEAD AND UNDERGROUND ELECTRIC LINES. CONTRACTOR SHALL ABIDE BY THE MOST RECENT NATIONAL ELECTRIC CODE FOR WORKING AROUND OVERHEAD ELECTRIC LINES AS WELL AS OTHER LOCAL, STATE OR FEDERALS LAWS / REQUIREMENTS.
15. CONFORM TO ALL APPLICABLE FEDERAL, STATE AND LOCAL LAWS GOVERNING EXCAVATION. TRENCH SIDE SLOPES SHALL MEET OSHA REQUIREMENTS THAT ARE IN EFFECT AT THE TIME OF CONSTRUCTION. CONTRACTOR SHALL SUBMIT A TRENCH SAFETY PLAN PRIOR TO CONSTRUCTION.
16. THIS PROJECT IS SUBJECT TO AMERICAN IRON AND STEEL (AIS) REQUIREMENTS. ALL IRON AND STEEL PRODUCTS FOR CONSTRUCTION, ALTERATION, MAINTENANCE, OR REPAIRS INCORPORATED MUST BE PRODUCED IN THE UNITED STATES.
17. PROVIDE DUST CONTROL AT ALL TIMES DURING CONSTRUCTION.
18. ANY WORK PERFORMED WITHOUT THE KNOWLEDGE OF THE ENGINEER, INSPECTOR OR OWNER'S REPRESENTATIVE IS SUBJECT TO REMOVAL AND REPLACEMENT AT THE CONTRACTOR'S EXPENSE.

EARTHWORK

1. ALL COMPACTED SUBGRADE AND BASE NOT ACCESSIBLE TO MECHANICAL COMPACTION EQUIPMENT SHALL BE HAND COMPACTED USING WHACKER PACKERS.
2. SUBGRADE PREPARATION FOR ALL STRUCTURES AND BUILDINGS ON DRAWINGS SHALL BE AS FOLLOWS: OVER-EXCAVATE 30 INCHES BELOW BASE OF CONCRETE, SCARIFY AND COMPACT TOP 12", COMPACT TO 95% STANDARD PROCTOR DENSITY, INSTALL NON-WOVEN NEEDLE PUNCHED GEOTEXTILE FABRIC, INSTALL 30 INCHES OF CRUSHER RUN AGGREGATE BASE IN 10" LIFTS, COMPACT TO 95% MODIFIED PROCTOR DENSITY. BASE OF CONCRETE SHALL BE CONSIDERED THE BOTTOM OF SLAB AND NOT THE BASE OF FOOTINGS/STEM WALLS. OVER EXCAVATION MAY BE DELETED WHERE ROCK IS PRESENT. #57 ROCK SHALL BE SUBSTITUTED FOR AGG BASE WHERE GROUNDWATER IS PRESENT. ALL FILL MATERIAL REQUIRED TO ACHIEVE FINAL GRADE BELOW THE 30" ROCK LAYER SHALL BE CONSTRUCTED WITH ONSITE OR IMPORTED FILL MATERIAL COMPACTED TO 95% STANDARD PROCTOR DENSITY.
3. ELEVATIONS GIVEN ARE FINISHED GRADE UNLESS OTHERWISE NOTED.
4. NO FIRES WILL BE ALLOWED UNLESS OTHERWISE NOTED. TREES AND BRUSH SHALL BE REMOVED AND DISPOSED OF OFF SITE.
5. NO BLASTING WILL BE ALLOWED.
6. ALL SURFACE DRAINAGE IMPACTED SHALL BE RESTORED TO AS GOOD OR BETTER CONDITION.
7. ALL DISTURBED AREAS SHALL BE LEFT FREE OF RUTS AND TRACKS AND SHALL BE FULLY GRADED TO DRAIN.

GRASSING

1. ANY AND ALL DISTURBED AREAS OUTSIDE OF PLANT FENCING SHALL BE TOPSOILED, HYDROMULCHED, AND WATERED UNTIL ESTABLISHED. ANY AND ALL DISTURBED AREAS INSIDE PLANT FENCING SHALL BE SOLID SLAB SODDED PER SPECIFICATIONS & WATERED UNTIL ESTABLISHED.
2. FOR PIPELINE CONSTRUCTION EXTERNAL TO THE TREATMENT PLANT, ANY AND ALL DISTURBED AREAS SHALL BE TOPSOILED, HYDROMULCHED, AND FERTILIZED, WITH THE EXCEPTION OF RESIDENTIAL YARDS AND IMPROVED GRASS AREAS WHICH SHALL RECEIVE SOLID SLAB SOD IN LIEU OF HYDROMULCHING PER SPECIFICATIONS. THIS WORK WILL NOT BE MEASURED FOR PAYMENT. COST SHALL BE INCLUDED IN THE PRICE BID FOR ASSOCIATED ITEMS OF WORK.

DUCTILE IRON PIPE & FITTINGS

1. ALL BURIED DUCTILE IRON PIPE AND FITTINGS SHALL BE PROTECTED IN ACCORDANCE WITH ANSI/AWWA C105/A21.5 "POLYETHYLENE ENCASEMENT FOR GRAY AND DUCTILE IRON PIPE FOR WATER AND OTHER LIQUIDS." THIS ITEM SHALL NOT BE MEASURED FOR PAYMENT AND SHALL BE INCLUDED IN THE PRICE BID FOR ASSOCIATED ITEMS OF WORK.
2. ALL AIR PIPING SHALL BE UNLINED WITH EPDM GASKETS RATED FOR COMPRESSED AIR USAGE (PRESSURE & TEMPERATURE.)
3. ALL DUCTILE IRON PIPING SHALL BE RESTRAINED JOINT.
4. ALL DUCTILE IRON PIPE CONNECTIONS TO P.V.C. SHALL BE MADE WITH A BOLTED CAST TRANSITION COUPLING.
5. ALL EXPOSED FITTINGS SHALL BE FLANGED FITTINGS W/ STAINLESS STEEL BOLTS AND APPURTENANCES.
6. ALL MECHANICAL JOINT, FLANGE & MISC. FITTINGS TO HAVE STAINLESS STEEL BOLTS, NUTS & WASHERS.
7. ALL BURIED FITTINGS SHALL BE D.I. MECHANICAL JOINT (M.J) RESTRAINED (MEGALUG.)
8. WALL PIPES SHALL BE USED WHEREVER PIPING PASSES FROM A STRUCTURE TO EARTHEN BACKFILL.
9. PROVIDE 1/4" ANTI-SEEPAGE RINGS A MINIMUM OF 2" WIDE WELDED TO ALL PIPES PIERCING WATER HOLDING TANKS TO PREVENT SEEPAGE OF WATER BETWEEN PIPE AND CONCRETE. WALL PIPES MAY BE USED IN LIEU OF WELDED RINGS.
10. ALL DUCTILE IRON PIPING LARGER THAN 10" DIAMETER SHALL HAVE CONCRETE SUPPORTS UNLESS OTHERWISE DETAILED. SMALLER PIPING MAY HAVE METAL STAND TYPE SUPPORTS.

CONCRETE

1. CONSTRUCTION JOINTS TO FACILITATE CONSTRUCTION SHALL BE LOCATED AND DETAILED ON THE SHOP DRAWINGS FOR REVIEW. UNLESS INDICATED OTHERWISE, ALL CONSTRUCTION JOINTS SHALL BE KEYED. HORIZONTAL CONSTRUCTION JOINTS SHALL NOT BE PERMITTED IN WALLS AND BEAMS, UNLESS SHOWN ON THE DRAWINGS OR APPROVED BY THE ENGINEER.
2. ALL EXPOSED CORNERS OF CONCRETE STRUCTURES REGARDLESS OF LOCATION SHALL HAVE A 3/4 INCH MINIMUM CHAMFER.
3. NOT USED.
4. ALL GROUTED AREAS OVER 8" THICK SHALL BE REINFORCED WITH WELDED WIRE MESH, 6x6-W2.0xW2.0 MATTS AT 8'-0" CTRS MAX.
5. ANCHOR BOLTS NOT SPECIFIED BY ENGINEER SHALL BE DESIGNED AND STAMPED BY A REGISTERED PROFESSIONAL ENGINEER, RETAINED BY THE CONTRACTOR IN ACCORDANCE WITH APPLICABLE PROJECT AND CODE REQUIREMENTS. SUBMIT AS A SHOP DRAWING FOR REVIEW AND APPROVAL BY THE ENGINEER. COORDINATE LOCATION, SIZE AND EMBEDMENT PRIOR TO CASTING OF CONCRETE.
6. EXPANSION JOINTS SHALL BE USED WHERE EXTERIOR OF ALL EXISTING AND PROPOSED STRUCTURES AND BUILDINGS ABUT CONCRETE PAVING WHETHER SHOWN ON THE DRAWINGS OR NOT.
7. NO FLY ASH SHALL BE PERMITTED IN CONCRETE MIX DESIGN.
8. TREMIES REQUIRED ON ALL POURS DEEPER THAN 10 FEET.
9. VAPOR BARRIER (10 MIL) REQUIRED BENEATH ALL SLABS.
10. WALKWAYS AND SIDEWALKS SHALL BE POURED WITH SLIGHT SLOPE AND NO LOW SPOTS SO THEY WILL DRAIN FREELY.
11. ALL STRUCTURAL JOINTS SHALL RECEIVE 6" RUBBER CENTER BULB PVC WATERSTOP PLACED AT ALL WATERTIGHT JOINTS.
12. VERTICAL WATERSTOP SHALL BE FULLY EMBEDDED IN SLAB POUR AND WELDED TO ALL ADJACENT WATERSTOP.
13. WHEN WATERSTOP IS PLACED HORIZONTALLY IN SLABS, THE CONTRACTOR SHALL TEMPORARILY TIE UP OR CLAMP UP THE WATERSTOP UNTIL THE CONCRETE IS PLACED TO SLIGHTLY ABOVE THE DEPTH OF THE WATERSTOP.
14. CONCRETE SHALL HAVE XYPEX ADMIXTURE PER SECTION 03_30_00 AND MANUFACTURE'S SPECIFICATIONS.

BUILDING

1. ALL EXTERIOR DOORS ON ALL BUILDINGS SHALL HAVE R-PANEL AWNING SUPPLIED INTEGRAL WITH METAL BUILDING. AWNING ROOF PANELS SHALL MATCH MAIN BUILDING ROOF. AWNINGS SHALL INCLUDE FULL WIDTH GUTTER WITH DOWNSPOUTS.
2. ALL EXTERIOR EXPOSED CMU SHALL BE SPLIT FACE ARCHITECTURAL BLOCK UNLESS OTHERWISE NOTED.
3. ANY R-PANEL USED IN THE BUILDING CONSTRUCTION WHERE NO GAUGE IS SPECIFIED SHALL BE 24 GA. MINIMUM.

PIPING & APPURTENANCES

1. MANHOLES SHALL BE GROUTED INSIDE AND OUT AT ALL JOINTS.
2. ALL NON-POTABLE WATER LINES SHALL BE IN PURPLE COLORED PIPE AND LABELED "DO NOT DRINK". THE WARNING LABEL SHALL BE LOCATED ON OPPOSITE SIDES OF ALL PIPES AND REPEATED EVERY THREE (3) FEET OR LESS.
3. ALL PIPING THAT CROSS VERTICALLY SHALL HAVE AT LEAST 6" SEPARATION.
4. ALL UNDERGROUND FITTINGS SHALL BE DUCTILE IRON MECHANICAL JOINTS (MEGALUG), UNLESS OTHERWISE NOTED.
5. ALL VALVE ASSEMBLIES, VAULTS, PULLS BOXES AND MANHOLES CONSTRUCTED SHALL BE ADJUSTED TO BE FLUSH WITH FINISHED GRADE UNLESS OTHERWISE NOTED. MANHOLES SET IN OPEN FIELDS SHALL BE SET TWELVE INCHES ABOVE FINISHED GRADE AND VAULTS SHALL BE SET 6 INCHES ABOUT FINISHED GRADE.
6. NOT USED.
7. ANY BY-PASS PUMPING AND/OR BY-PASS PIPING INSTALLED SHALL BE OPERATED AND MAINTAINED BY THE CONTRACTOR AT CONTRACTOR'S EXPENSE. THE CONTRACTOR IS RESPONSIBLE FOR ANY UNAUTHORIZED DISCHARGES.
8. CONNECTIONS TO EXISTING UTILITIES SHALL BE MADE IN A TIME AND UNDER CONDITIONS WHICH WILL LEAST INTERFERE WITH SERVICE OF THE OWNER, AND AS AUTHORIZED BY THE ENGINEER AND OWNER. FACILITIES SHALL BE PROVIDED FOR PROPER DEWATERING AND FOR DISPOSAL OF ALL WATER/WASTEWATER REMOVED TO ADJACENT PROPERTY FROM DEWATERED LINES WITHOUT DAMAGE.
9. MAINTAIN THE REQUIRED 10 FOOT HORIZONTAL AND 2 FOOT VERTICAL SEPARATION BETWEEN SANITARY SEWER AND POTABLE WATER MAINS. ALL OTHER PIPING SHALL MAINTAIN A MINIMUM OF 5' SEPARATION.
10. ORDER MANHOLES IN PAVEMENT LOWER THAN PROPOSED GRADE AND BRING THEM TO EXACT GRADE WITH LEVEL RINGS.
11. PROVIDE FREEZE PROTECTION FOR ANY EXPOSED PIPING. FREEZE PROTECTION SHALL CONSIST OF WRAPPED PIPE W/ RIGID ALUMINUM COVERS UNLESS OTHERWISE SPECIFIED. FREEZE PROTECTION/INSULATION WILL NOT BE REQUIRED FOR PIPING INSIDE BUILDING, AIR PIPING OR SCADA INSTRUMENTATION CONDUIT.
12. CONTRACTOR SHALL SCHEDULE AND CONDUCT OPERATIONS TO LIMIT AMOUNT OF TRENCH OPENED TO INCLUDE ONLY THAT WHICH MAY BE COVERED IN 2 (TWO) DAYS TIME TO A MAXIMUM OF 200'. ANY TRENCH LEFT OPEN OVERNIGHT SHALL BE BARRICADED AND PROTECTED AS DETAILED IN THE MOST CURRENT EDITION OF THE MANUAL OF UNIFORM TRAFFIC CONTROL DEVICES.
13. SEWER MAINS SHALL BE CONSTRUCTED UTILIZING A LASER WITH GRADE ESTABLISHED THROUGH SEWER PIPE.
14. WHEN TIE-INS TO EXISTING MANHOLES ARE TO BE MADE, CONTRACTOR SHALL VERIFY MANHOLE FLOW LINE AT AN INTERVAL PRIOR TO MANHOLE TO ENSURE ADEQUATE DEPTH OF NEW LINE. WHEN CONSTRUCTING A MANHOLE OVER AN EXISTING LINE, CONTRACTOR SHALL VERIFY EXISTING LINE DEPTHS PRIOR TO MANHOLE CONSTRUCTION.
15. MATERIAL EXCAVATED FROM TRENCH & PIPE BEDDING MATERIALS SHALL NOT BE PLACED ON ADJACENT ASPHALT OR CONCRETE PAVING.
16. A SILT AND VARMINT CAP AND/OR PLUG SHALL BE IN PLACE ON THE OPEN END OF PIPES AT ALL TIMES.
17. DO NOT EXCEED 75% OF MANUFACTURE'S RECOMMENDED MAXIMUM DEFLECTION FOR PIPE JOINTS UNLESS OTHERWISE NOTED.
18. INSTALL TEMPORARY FENCES TO PROTECT HORSES AND LIVESTOCK WHEN NECESSARY.
19. REMOVAL AND REPLACEMENT OF STREET TRAFFIC SIGNS, MAIL BOXES AND OTHER STRUCTURES BY THE CONTRACTOR TO FACILITATE CONSTRUCTION SHALL BE CONSIDERED INCIDENTAL AND BE INCLUDED IN THE PRICE BID.
20. ALL EXISTING PAYMENT TO REMAIN SHALL BE SAWCUT TO ENSURE A STRAIGHT SMOOTH SURFACE. ALL CUTS MADE IN DRIVEWAYS OR OTHER PAVEMENTS SHALL BE MADE IN STRAIGHT PERPENDICULAR LINES. COST TO BE CONSIDERED SUBSIDIARY TO CONTRACTOR'S BID.



TREATMENT PLANT

1. ALL EXPOSED COMPONENTS REGARDLESS OF LOCATION TO BE CORROSION RESISTANT (GALVANIZED, ALUMINUM, SST, FRP, ETC).
2. PROPERLY INSULATE, GASKET AND PROTECT TRANSITIONS TO DISSIMILAR METALS (DUCTILE-STAINLESS).
3. ALL EXPOSED VALVES SHALL HAVE HANDWHEELS OR LEVERS. CHAINWHEELS TO BE PROVIDED ON ALL ELEVATED VALVING.
4. ALL PLANT PIPING, CONDUIT, DRAINS, EQUIPMENT, PIPING, ELECTRICAL, COMPONENTS, ETC., SHALL BE PROVIDED WITH PIPE AND EQUIPMENT SUPPORTS. PIPE AND EQUIPMENT HANGERS FOR ALL BRACING AND STABILIZATION FOR A COMPLETE SYSTEM AND PROVIDE WALKING ACCESS AREAS FREE AND CLEAR. ALL PIPE SHALL BE PROPERLY PAINTED OR COATED WITH APPROVED PAINT. CONTRACTOR SHALL LABEL UNITS, PIPING, VALVES, TANKS, ETC., WITH PROPER FLOW DIRECTION AND TYPE. LOCATION AND NUMBER OF PIPE HANGERS AND PIPE SUPPORTS SHOWN IN ONLY APPROX. CONTRACTOR SHALL DESIGN SUPPORTS AS SPECIFIED.
5. ALL PVC/CPVC VALVES AND COMPONENTS FOR USE IN CHEMICAL FEED AND AIR PIPING SHALL HAVE VITON SEALS AND SHALL BE RATED FOR PRODUCT BEING CARRIED.
6. ALL SUSPENDED PIPING SHALL BE SUPPORTED AT NOT LESS THAN EVERY 10 FEET. ALL PIPING LARGER THAN 6" DIAMETER MAY REQUIRE ADDITIONAL SUPPORTS PER SUPPORT SUPPLIERS RECOMMENDATIONS AND/OR SPECIFICATION REQUIREMENTS.
7. ALL WATERTIGHT STRUCTURES CONCRETE SHALL HAVE 72 HOUR WATER TEST FOR LEAKAGE ON STRUCTURE BEFORE BACKFILL.
8. DISSIMILAR METALS IN CONTACT SHALL BE PROVIDED WITH GALVANIC SEPARATION.
9. CONTRACTOR SHALL COORDINATE WITH SUPPLIERS AND PROVIDE DRAIN CONDUIT (2" MINIMUM) FOR ANY/ALL ANALYZERS, RPZ, AIR/VAC VALVES, SAMPLERS OR ANY OTHER ITEM INSIDE BUILDING WHICH DISCHARGES INTERMITTENT WATER AND ROUTE TO DRAIN. NO SURFACE DRAINAGE WILL BE PERMITTED.
10. NOT USED.
11. SUBMIT FOR REVIEW ALL EQUIPMENT SIZES, OPERATING WEIGHTS, VIBRATION FORCES, SUPPORT LOCATIONS, ALONG WITH ANY FLOOR OPENINGS, NOTCHES, AND RECESSES REQUIRED BY SUCH EQUIPMENT. CONCRETE SUPPORT PADS AND/OR FRAMING REQUIRED TO SUPPORT SAID EQUIPMENT SHALL NOT BE FABRICATED AND PLACED UNTIL THE CONCRETE SUPPORT PADS AND/OR FRAMING IS APPROVED TO SUPPORT THE EQUIPMENT.
12. PROCESS EQUIPMENT DELIVERIES SHALL BE COORDINATED SO THAT EQUIPMENT COMES TO SITE NO MORE THAN 60 DAYS PRIOR TO INSTALLATION, UNLESS STORED INDOORS WITH CLIMATE CONTROL.
13. AT ALL POINTS UNDERGROUND WHERE PIPING EXITS STRUCTURES AND TRANSITIONS TO NATURAL GROUND OR OTHER AREAS SUBJECT TO GROUND SETTLING OR OTHER POTENTIAL INTRODUCED STRESSES AFTER INSTALLATION, A BELL-FLANGE WALL PIPE W/SEEP RING AND RESTRAINED MECHANICAL JOINT SHALL BE PROVIDED TO ALLOW FOR DEFLECTION WHETHER BEING SHOWN ON DRAWINGS OR NOT. NO EXCEPTIONS.
14. ALL PIPING 18" AND LARGER SHALL HAVE A MINIMUM COVER OF 48"; AND PIPE SMALLER THAN 18" SHALL HAVE A MINIMUM COVER OF 36" UNLESS OTHERWISE NOTED. PIPE SHALL BE ROUTED AS SHOWN UNLESS MINOR REVISIONS ARE NECESSARY TO AVOID EXISTING PIPES, STRUCTURES, ETC. CONTRACTOR SHALL BE RESPONSIBLE FOR FURNISHING ALL FITTINGS AND ADAPTERS REQUIRED TO MAKE THE ROUTING CHANGES. CONTRACTOR SHALL INCLUDE COST IN PRICE BID.
15. WHERE CONFLICTS OCCUR BETWEEN CIVIL AND MEP DRAWINGS SHALL GOVERN. ELECTRICAL CONTRACTOR IS RESPONSIBLE FOR VERIFICATION AND ANY MINOR MODIFICATIONS REQUIRED TO FACILITATE INSTALLATION AS OUTLINED ON CIVIL DRAWINGS.
16. REVIEW OF ANY/ALL SCOPE AND PROPOSALS FURNISHED BY EQUIPMENT SUPPLIERS AND SHALL VERIFY ALL REQUIREMENTS OUTLINED IN PROPOSED EQUIPMENT SCOPE/PROPOSAL HAVE VERIFIED AGAINST THE DRAWINGS PRIOR TO BID. ANY ADJUSTMENTS AND/OR ADDITIONAL WORK/MATERIALS REQUIRED ARE THE RESPONSIBILITY OF THE CONTRACTOR AND NO ADDITIONAL COMPENSATION WILL BE PROVIDED.
17. MAKE CONNECTIONS TO EXISTING PIPE, EQUIPMENT, ETC. AS REQUIRED AND SHALL PROVIDE ALL FITTINGS, ADAPTERS AND APPURTENANCES REQUIRED TO MAKE THE CONNECTIONS. PROVIDE SUPPORTS REQUIRED FOR A RIGIDLY SUPPORTED SYSTEM.
18. TEMPORARILY RELOCATE PIPING AS REQUIRED TO MAINTAIN SERVICE TO THE EXISTING PLANT.
19. MECHANICAL AND ELECTRICAL EQUIPMENT SUPPORTS, ANCHORAGES, OPENINGS, RECESSES, AND REVEALS NOT SHOWN ON THE STRUCTURAL DRAWINGS THAT ARE REQUIRED BY OTHER CONTRACT DRAWINGS SHALL BE PROVIDED PRIOR TO CASTING CONCRETE.
20. PRIOR TO FABRICATION OF NEW PIPING, INCLUDING SPECIAL FITTINGS AND EXCAVATIONS FOR NEW STRUCTURES, ELECTRICAL CONDUIT AND/OR OTHER PROPOSED UTILITIES, CONTRACTOR SHALL BE RESPONSIBLE FOR VERIFYING THE LOCATION OF ALL EXISTING PIPING AND UTILITIES IN THE CONSTRUCTION AREA. AT TIE-IN LOCATIONS, VERIFY THE SIZING OF EXISTING PIPING BEFORE FABRICATION OF NEW PIPING AND FITTINGS. THE CONTRACTOR SHALL INCLUDE THE COST IN HIS BID FOR TEMPORARILY RELOCATING AND REINSTALLING EXISTING UTILITIES AS REQUIRED FOR CONSTRUCTION OF PROPOSED ITEMS.
21. ANY PLANT UTILITY, PIPING, CONDUIT, COMMUNICATION SYSTEM, ELECTRICAL OR INSTRUMENTATION WIRING DAMAGED DURING CONSTRUCTION SHALL BE REPAIRED AND PLACED BACK IN SERVICE BY THE CONTRACTOR ON THE SAME DAY THAT THE DAMAGE OCCURRED. AFTER 24 HOURS OUT OF SERVICE, OWNER WILL HAVE THE OPTION OF HAVING THE REPAIRS MADE BY A SEPARATE CONTRACTOR AND DEDUCTING THE COST OF SAID REPAIRS FROM THE CONTRACT AMOUNT.
22. GALVANIZED STEEL PRODUCTS SHALL NOT BE USED FOR ANY TREATMENT PLANT STRUCTURE / EQUIPMENT CONSTRUCTION UNLESS SPECIFICALLY CALLED OUT / APPROVED.
23. ALL NEW UNISTRUT, ANCHORS, SUPPORT SYSTEMS AND FASTENING HARDWARE TO BE 316 STAINLESS STEEL.
24. BACKFILLING AGAINST STRUCTURES WHICH HAVE A TOP SLAB SHALL BE DONE ONLY AFTER THE TOP SLAB IS IN PLACE AND THE CONCRETE HAS CURED TO 2/3 OF ITS DESIGN STRENGTH, BUT IN NO CASE LESS THAT 4 DAYS.
25. STAGING AREA WILL ONLY BE USED FOR CONSTRUCTION EQUIPMENT AND MATERIALS USED IN THE CONSTRUCTION OF THE PROJECT. CONSTRUCTION DEBRIS SHOULD NOT BE ALLOWED TO ACCUMULATE AND SHOULD BE REMOVED ON A WEEKLY BASIS.
26. INSTALL METAL TRACER WIRE AND COLOR CODE FOR ALL PIPE INSTALLED.
27. IN ACCORDANCE WITH OAC 252:656-5-4(C)(1), SANITARY SEWER MUST BE AT LEAST 10-FEET FROM AN EXISTING OR PROPOSED WATERMAIN AND AT LEAST 5-FEET ELECTRICAL OR PETROLEUM LINES. SANITARY SEWERS MUST CROSS AT LEAST 24 INCHES ABOVE OR BELOW WATERMAINS.
28. THE CONTRACTOR SHALL NOT OPEN OR CLOSE ANY VALVES AT THE TREATMENT PLANT AND SHALL ASK FOR THE OWNER'S ASSISTANCE.

ELECTRICAL/CONTROLS/SCADA

1. ALL ELECTRICAL CONSTRUCTION SHALL BE IN STRICT ACCORDANCE WITH ALL N.E.C. AND LOCAL ELECTRICAL CODES.
2. ALL EQUIPMENT (INCLUDING MCC & PANELS) SHALL RECEIVE HOUSEKEEPING PADS WITH #4 BARS @ 12" O.C.E.W. MINIMUM THICKNESS SHALL BE 6" OR AS REQUIRED FOR ANCHOR BOLT CLEARANCE. ANCHOR BOLTS SLEEVES MAY BE USED PROVIDED THE SLEEVES ARE NON-SHRINK GROUT FILLED WITH 1-1/2" GROUT UNDER EQUIPMENT BASE. ALL PADS SHALL BE ANCHORED TO CONCRETE SLABS WITH J BARS (#3 @ 12" O.C.) OR EPOXY ANCHORS.
3. ALL SCADA SYSTEM WIRING SHALL BE CONDUIT ENCASED AND IS NOT SHOW FOR CLARITY. CONTRACTOR TO PROVIDE PROPOSED CONDUIT LAYOUT WITH SCHEDULE TO ENGINEER FOR APPROVAL PRIOR TO CONSTRUCTION.
4. ALL SURFACE MOUNTED PANELS AND PANEL BOARDS ON THE INTERIOR OF EXTERIOR WALLS OR IN OTHER LOCATIONS CONSIDERED DAMP OR WET AND SHALL BE MOUNTED SO AS TO MAINTAIN A 1/4" MINIMUM AIR SPACE BETWEEN THE ENCLOSURE AND THE WALL.
5. ALL EXTERNAL DISPLAYS SHALL BE PROVIDED WITH A WEATHER SHIELD.
6. REVIEW ANY/ALL SCOPE AND PROPOSALS FURNISHED BY EQUIPMENT SUPPLIERS. VERIFY ALL ELECTRICAL REQUIREMENTS OUTLINED IN PROPOSED EQUIPMENT SCOPE/PROPOSAL HAVE BEEN ACCOMMODATED FOR BY ELECTRICAL CONTRACTOR.
7. THE WIRING DIAGRAMS, QUANTITY AND SIZE OF WIRES AND CONDUITS REPRESENT A SUGGESTED ARRANGEMENT BASED UPON SELECTED STANDARD COMPONENTS OF ELECTRICAL EQUIPMENT. IF EQUIPMENT SUPPLIED BY THE MANUFACTURER HAS A LARGER LOAD THAN THE VALUE SHOWN OR INDICATED, THE CABLE, CONDUIT AND ELECTRICAL EQUIPMENT SHALL BE ENLARGED AS REQUIRED TO ACCOMMODATE THE HIGHER LOADING. HOWEVER, THE BASIC SEQUENCE AND METHOD OF CONTROL MUST BE MAINTAINED AS INDICATED ON THE DRAWINGS AND/OR SPECIFICATIONS. CONTRACTOR TO PROVIDE PROPOSED CONDUIT LAYOUT WITH SCHEDULE TO ENGINEER FOR APPROVAL PRIOR TO CONSTRUCTION.

WALL ENGINEERING
223 N. WASHINGTON, DURANT, OK 74701
OKLAHOMA CA #5413 EXP. JUNE 30, 2023

SUBMITTAL / REVISIONS:

DATE	BY	SUBMITTAL / REVISION
06/22	TL	ISSUED FOR BIDDING
07/22	JR	REVISED PER ADDENDUM NO. 1

SHAWNEE MUNICIPAL AUTHORITY
SOUTHSIDE IMPROVEMENTS
SHAWNEE, OKLAHOMA

GENERAL CONSTRUCTION NOTES

PROJECT NO.
SHN-20-01

DATE
06/22

DRAWN BY:
TL

CHECKED BY:
JR

REVIEWED BY:
DBW

SCALE:
NOT TO SCALE

BAR IS ONE INCH ON ORIGINAL DRAWING
0" 1"
IF NOT ONE INCH ON THIS SHEET, ADJUST SCALES ACCORDINGLY

SHEET
C-1

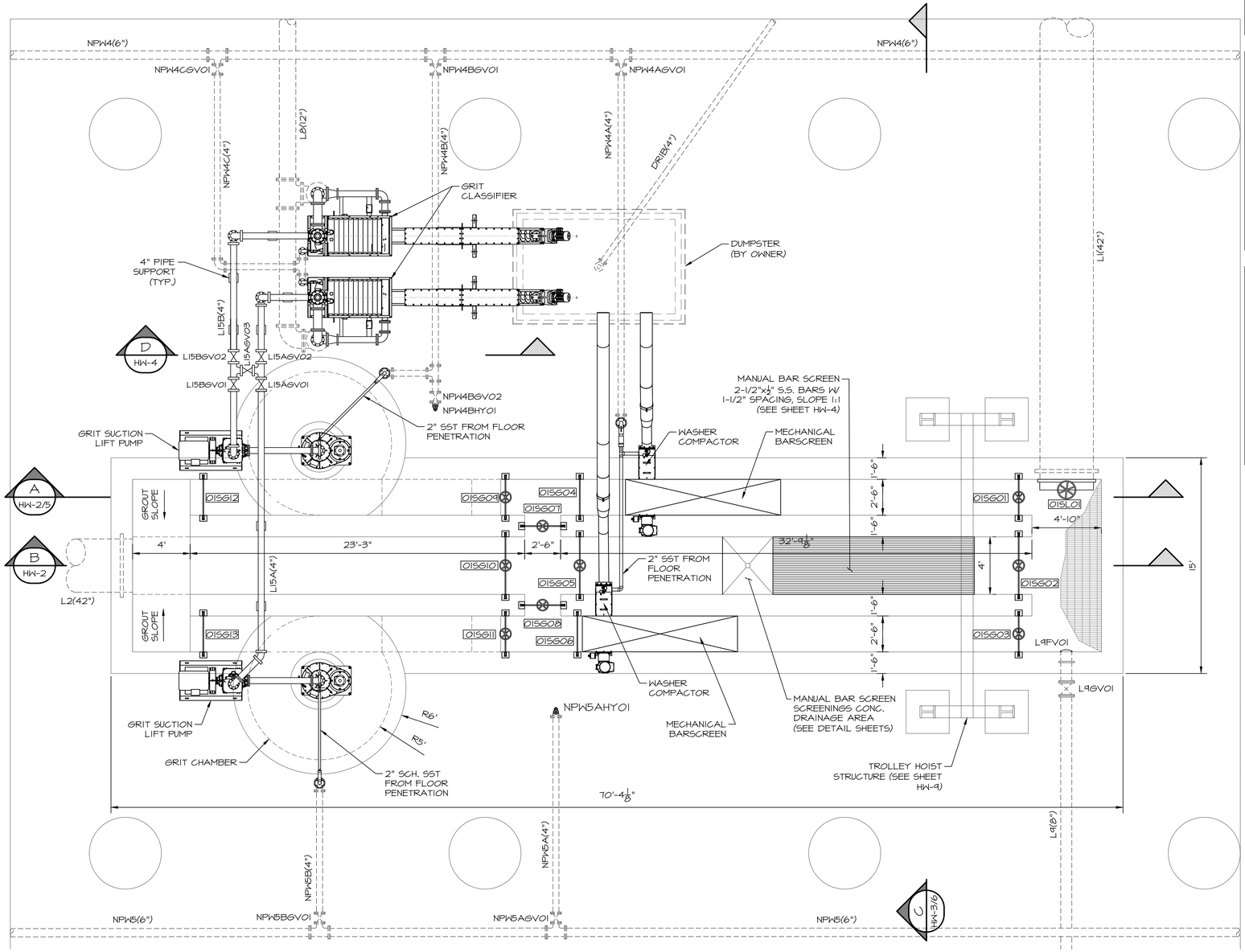

316L SS GATE SCHEDULE					
GATE IDENTIFICATION	015L01	015G01	015G02	015G03	015G04
GATE TYPE	SLUICE	CHANNEL	CHANNEL	CHANNEL	SLIDE
GATE SIZE	42" Φ	30"x18"	48"x12"	30"x18"	30"x60"
GATE SERIES	935	921	921	921	521
MOUNTING - FRAME	CW	FE	FE	FE	FE
MOUNTING - INVERT	EMBEDED	EMBEDED	EMBEDED	EMBEDED	EMBEDED
HOIST REQUIREMENT					
A. MANUAL	HW	HW	HW	HW	N/A
B. ELECTRIC	YES	YES	YES	YES	NO
C. STEM COVER	L	L	L	L	N/A
D. POSITION COVER	MYLAR	MYLAR	MYLAR	MYLAR	N/A
E. STEM CONFIGURATION	RISING	RISING	RISING	RISING	N/A
LIFT MOUNTING	WALL	YOKE	YOKE	YOKE	N/A
LEAKAGE STANDARD	AWWA	AWWA	AWWA	AWWA	AWWA
OPERATING FLOOR ELEV.	988.00'	988.00'	988.00'	988.00'	988.00'
INVERT ELEV.	974.00'	974.00'	974.00'	974.00'	974.00'

316L SS GATE SCHEDULE					
GATE IDENTIFICATION	015G05	015G06	015G07	015G08	015G09
GATE TYPE	CHANNEL	SLIDE	CHANNEL	CHANNEL	CHANNEL
GATE SIZE	48"x12"	30"x60"	30"x18"	30"x18"	30"x18"
GATE SERIES	921	521	921	921	921
MOUNTING - FRAME	FE	FE	FE	FE	FE
MOUNTING - INVERT	EMBEDED	EMBEDED	EMBEDED	EMBEDED	EMBEDED
HOIST REQUIREMENT					
A. MANUAL	HW	N/A	HC	HC	HC
B. ELECTRIC	YES	NO	NO	NO	NO
C. STEM COVER	L	N/A	L	L	L
D. POSITION COVER	MYLAR	N/A	MYLAR	MYLAR	MYLAR
E. STEM CONFIGURATION	RISING	N/A	RISING	RISING	RISING
LIFT MOUNTING	YOKE	N/A	YOKE	YOKE	YOKE
LEAKAGE STANDARD	AWWA	AWWA	AWWA	AWWA	AWWA
OPERATING FLOOR ELEV.	988.00'	988.00'	988.00'	988.00'	988.00'
INVERT ELEV.	974.00'	974.00'	974.00'	974.00'	974.00'

316L SS GATE SCHEDULE				
GATE IDENTIFICATION	015G10	015G11	015G12	015G13
GATE TYPE	CHANNEL	CHANNEL	SLIDE	SLIDE
GATE SIZE	48"x12"	30"x18"	30"x60"	30"x60"
GATE SERIES	921	921	521	521
MOUNTING - FRAME	FE	FE	FE	FE
MOUNTING - INVERT	EMBEDED	EMBEDED	EMBEDED	EMBEDED
HOIST REQUIREMENT				
A. MANUAL	HW	HC	N/A	N/A
B. ELECTRIC	YES	NO	N/A	NO
C. STEM COVER	L	L	N/A	N/A
D. POSITION COVER	MYLAR	MYLAR	N/A	N/A
E. STEM CONFIGURATION	RISING	RISING	N/A	N/A
LIFT MOUNTING	YOKE	YOKE	N/A	N/A
LEAKAGE STANDARD	AWWA	AWWA	AWWA	AWWA
OPERATING FLOOR ELEV.	988.00'	988.00'	988.00'	988.00'
INVERT ELEV.	974.00'	974.00'	974.00'	974.00'

INDEX
FE: EMBEDDED FRAME
HC: HAND CRANK
GS: GALVANIZED STEEL
CW: CHANNEL WALL
SQN: SQUARE NUT
L: LEXAN

NOTES:
1. NOT USED.
2. NOT USED.
3. GATE WIDTHS LISTED ARE NOMINAL.
4. CONTRACTOR SHALL ADJUST LOCATION OF GRIT WASHER CONVEYER TO ALLOW FOR USE OF ONE DUMPSTER.
5. THERE SHALL NOT BE ANY GRATING OVER GATES WHICH WOULD INTERFERE WITH OPERATION.
6. NOT USED.
7. GRIT PUMPS SHALL BE EQUIPPED WITH CASE HEATING AND FREEZE PROTECTION PER MANUFACTURERS RECOMMENDATIONS.
8. FW WATER CONNECTION TO EQUIPMENT SHALL BE INSTALLED WITH CONNECTION SOLENOID VALVE SUPPLIED BY MANUFACTURER. FIELD ROUTE ELECTRICAL/CONTROLS PER MANUFACTURERS RECOMMENDATIONS.
9. CONTRACTOR SHALL VERIFY WITH OWNER DUMPSTER DIMENSIONING PRIOR TO PLACEMENT OF CLASSIFIER/COMPACTOR DISCHARGE OUTLETS.
10. ALL PIPING AND CONNECTIONS SHALL BE PER MANUFACTURERS RECOMMENDATIONS.
11. ALL ELECTRONICALLY ACTUATED VALVES TO ALSO BE EQUIPPED WHANDWHEEL OPERATORS.
12. SLIDE GATES TO BE MOUNTED PER MANUFACTURERS RECOMMENDATIONS.
13. CONTRACTOR TO INSTALL A 2" RADIUS FILLET BEFORE AND AFTER THE SCREENS TO PREVENT SEDIMENTATION OF SOLIDS. CONTRACTOR SHALL VERIFY WITH MFR. THAT APPROPRIATE CHANNEL VELOCITY WILL BE MAINTAINED.
14. ACTUATED SLIDE GATE EMERGENCY FLOAT TO AUTOMATICALLY CLOSE GATE IN THE EVENT WATER RISES TO HEADWORKS FLOOR.
15. AT CONTRACTORS OPTION, FLOOR OF HEADWORKS MAY BE POURED LEVEL AT ELEVATION GROUTED TO PROPOSED FLOW LINE ELEVATION.
16. COORDINATE LOCATIONS FOR REQUIRED WASH WATER NON POTABLE WATER MAINS WITH HEADWORKS EQUIPMENT SUPPLIER PRIOR TO INSTALLATION.
17. ELECTRONICALLY OPERATED GATE SHALL BE 480 VOLTS/3 PHASE.
18. CONTRACTOR SHALL SUBMIT A COMPLETE PIPING PLAN FOR APPROVAL.
19. CONTRACTOR SHALL PROVIDE PIPING SUPPORTS AS NEEDED REGARDLESS OF BEING SHOWN ON DRAWINGS.
20. ALL OPEN AREAS OF HEADWORKS STRUCTURE ARE TO RECEIVE GRATING. SOME GRATING IS NOT SHOWN FOR CLARITY.
21. COORDINATE WITH EQUIPMENT SUPPLIER FOR EXACT REQUIREMENTS OF INLET WATER PIPING PRIOR TO BID.
22. EQUIPMENT DRAINS NOT SHOWN IN PIPING SHALL BE FIELD ROUTED TO HEADWORKS CHANNELS PER MANUFACTURER RECOMMENDATIONS.
23. COMPLETE SYSTEM TO BE EQUIPPED WITH A FACTORY DESIGNED FREEZE PROTECTION SYSTEM CONSISTING OF HEAT TAPE, CASE HEATERS AND INSULATION. FREEZE PROTECTION SYSTEM SHALL BE DESIGNED TO ENSURE PROPER OPERATION INDEFINITELY AT -15 DEGREES FAHRENHEIT. PROVIDE INFORMATION ON FREEZE PROTECTION SYSTEM WITH THE EQUIPMENT SUBMITTAL.
24. ALL EXPOSED PIPING IN HEADWORKS AREA 6" AND SMALLER SHALL BE GROOVED 316 STAINLESS STEEL. COMPLETE SYSTEM TO BE FURNISHED AND DESIGNED BY VICTAULIC.
25. ALL HYDRANTS TO BE FURNISHED WITH STAINLESS STEEL SELF SUPPORTING HOSE RACK AND 50' OF HEAVY DUTY COMMERCIAL HOSE (1").

REGISTERED PROFESSIONAL ENGINEER
07/07/23
BRANDON WALL
21108
OKLAHOMA

WALL ENGINEERING
223 N. WASHINGTON, DURANT, OK 74701
OKLAHOMA CA #5413 EXP. JUNE 30, 2023

SUBMITTAL / REVISIONS:

	DATE	BY	SUBMITTAL / REVISION
1	06/22	TL	ISSUED FOR BIDDING
2	07/22	JR	REVISED PER ADDENDUM NO. 1

SHAWNEE MUNICIPAL AUTHORITY
SOUTHSIDE IMPROVEMENTS
SHAWNEE, OKLAHOMA

INFLUENT BARSCREEN AND GRIT REMOVAL
HEADWORKS PLAN VIEW

PROJECT NO.
SHN-20-01
DATE
06/22
DRAWN BY:
TL
CHECKED BY:
BW
REVIEWED BY:
DBW
SCALE:
1/4"=1'-0"

BAR IS ONE INCH ON ORIGINAL DRAWING
0" 1"
IF NOT ONE INCH ON THIS SHEET, ADJUST SCALES ACCORDINGLY

SHEET
HW-1

PIPING SCHEDULE STRUCTURE #2

NO.	ITEM	DESCRIPTION/NOTES
1	8" D.I. 22.5° BEND, FLxFL	
2	14"x8" D.I. ECCENTRIC REDUCER, FLxFL	ECCENTRIC
3	14" D.I. SPOOL, FLxFL	
4	14" D.I. 90° BEND, FLxFL	WITH RESTRAINED GLAND
5	14" D.I. WALL PIPE, FLxPE	WITH THRUST COLLAR
6	14" D.I. TEE, FLxFL	
7	14" D.I. DISMANTLING JOINT, FLxFL	
8	14"x14"x6" D.I. TEE, FLxFL	
9	6" D.I. SPOOL, FLxFL	
10	6" D.I. 90° BEND, FLxFL	
11	6" D.I. WALL PIPE, FLxPE	WITH THRUST COLLAR
12	6" D.I. DISMANTLING JOINT, FLxFL	
13	NOT USED	
14	NOT USED	
15	14"x16" D.I. ECCENTRIC REDUCER, FLxFL	ECCENTRIC
16	16" D.I. SPOOL, FLxFL	
17	16" D.I. 90° BEND, FLxFL	WITH RESTRAINED GLAND
18	16" D.I. WALL PIPE, FLxPE	WITH THRUST COLLAR
19	16" D.I. DISMANTLING JOINT, FLxFL	
20	16"X18" D.I. 90° REDUCING BEND, FLxFL	
21	18" D.I. SPOOL, FLxFL	
22	18"x18"x16" D.I. TEE, FLxFL	
23	18" D.I. DISMANTLING JOINT, FLxFL	
24	18" D.I. WALL PIPE, FLxPE	WITH THRUST COLLAR
25	3" PVC CHECK VALVE	
26	3" SCH. 80 PVC	
27	3" SHC. 80 PVC 90° BEND	
28	FLOOR DRAIN	NEENAH MODEL R-4937-A
29	NOT USED	
30	PIPE SUPPORT	AS NEEDED, SEE NOTE 7
31	2" AIR/VAC VALVE	WITH BALL VALVE AND COCK
32	3" AIR/VAC VALVE	WITH BALL VALVE AND COCK

PUMP SCHEDULE STRUCTURE #2

NO.	FLOW	TDH-DES	FUNCTION	CONTROL	HP	EFFICIENCY MIN.
02P101, 02P102	3,600 GPM	172'	PRIMARY	VFD	250	65%
02P103, 02P104	6,000 GPM	36'	STORMWATER	VFD	75	65%

PUMP NOTES:

1. PUMPS SHALL BE PROVIDED WITH BASE ELBOWS, S.S. RAILS, AND S.S. LIFTING CHAINS.
2. CONTRACTOR SHALL PROVIDE FITTINGS AS REQUIRED TO CONNECT BASE ELBOWS TO LIFT STATION PIPING.
3. PUMPS SHALL BE 460 VOLT THREE PHASE.
4. EACH PUMP SHALL BE EQUIPPED WITH A VARIABLE FREQUENCY DRIVE.

NOTES:

1. SEAL CONDUITS TO KEEP WET WELL GASSES OUT OF CONTROL PANEL.
2. LOCATE FLOATS AND CABLE HOLDER AWAY FROM INLET PIPE.
3. WETWELL FLOOR SHALL SLOPE TO PUMPS AS SHOWN.
4. ALL COMPONENTS SUBJECT SHALL BE DUCTILE IRON OR STAINLESS STEEL.
5. ALL ELECTRONICALLY ACTUATED VALVES TO ALSO BE EQUIPPED WITH HAND WHEEL OPERATORS.
6. ALL EXPOSED PIPING SHALL BE FULLY INSULATED AND HEAT TRACED TO PREVENT FROM FREEZING.
7. PIPE SUPPORT LOCATIONS ARE FOR REFERENCE ONLY & MORE MAY BE REQUIRED PER SPECIFICATION REQUIREMENTS AND/OR INDUSTRY STANDARD.
8. WETWELL TO BE EQUIPPED WITH A LEVEL TRANSDUCER AND 3 BACKUP FLOATS (LOW LEVEL, ALARM, INFLUENT CLOSE).
9. ALL HYDRANTS TO BE FURNISHED WITH STAINLESS STEEL SELF SUPPORTING HOSE RACK AND 50' OF HEAVY DUTY COMMERCIAL HOSE (1").

316L SS GATE SCHEDULE STRUCTURE #2

GATE IDENTIFICATION	02SL01	02SL02
GATE TYPE	SLUICE	SLUICE
GATE SIZE	24" Φ	24"
GATE SERIES	925	925
MOUNTING - FRAME	CW	CW
MOUNTING - INVERT	EMBEDED	EMBEDED
HOIST REQUIREMENT		
A. MANUAL	HC	HC
B. ELECTRIC	NO	NO
C. STEM COVER	L	L
D. POSITION COVER	MYLAR	MYLAR
E. STEM CONFIGURATION	RISING	RISING
LIFT MOUNTING	WALL	WALL
LEAKAGE STANDARD	AWWA	AWWA
OPERATING FLOOR ELEV.	988.00'	988.00'
INVERT ELEV.	959.50'	959.50'

INDEX
FE: EMBEDDED FRAME
HC: HAND CRANK
GS: GALVANIZED STEEL
CW: CHANNEL WALL
SQN: SQUARE NUT
L: LEXAN

VALVE SCHEDULE STRUCTURE #2

VALVE I.D.	VALVE TYPE	VALVE SIZE	MOTORIZED
L3PV01	PLUG	14"	NO
L3SCV01	SMART CHECK	14"	NA
L3APV01	PLUG	14"	NO
L3ACV01	CHECK	14"	NA
L3BPV01	PLUG	14"	NO
L3BCV01	CHECK	14"	NA
L4PV01	PLUG	18"	NO
L4APV01	PLUG	16"	NO
L4ACV01	CHECK	16"	NA
L4BPV01	PLUG	16"	NO
L4BCV01	CHECK	16"	NA
DR2PV01	PLUG	6"	NO
DR2SRV01	SURGE RELIEF	6"	NA
DR2FV01	FLAP VALVE	6"	NA

NOTES:

1. FIELD ROUTE ARV DRAINS TO WETWELL FLOOR DRAIN IN PVC PIPE (NOT SHOWN FOR CLARITY).

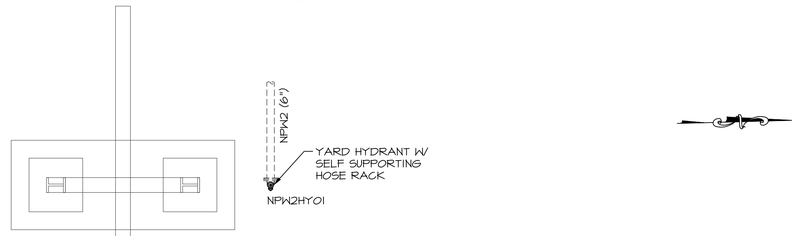

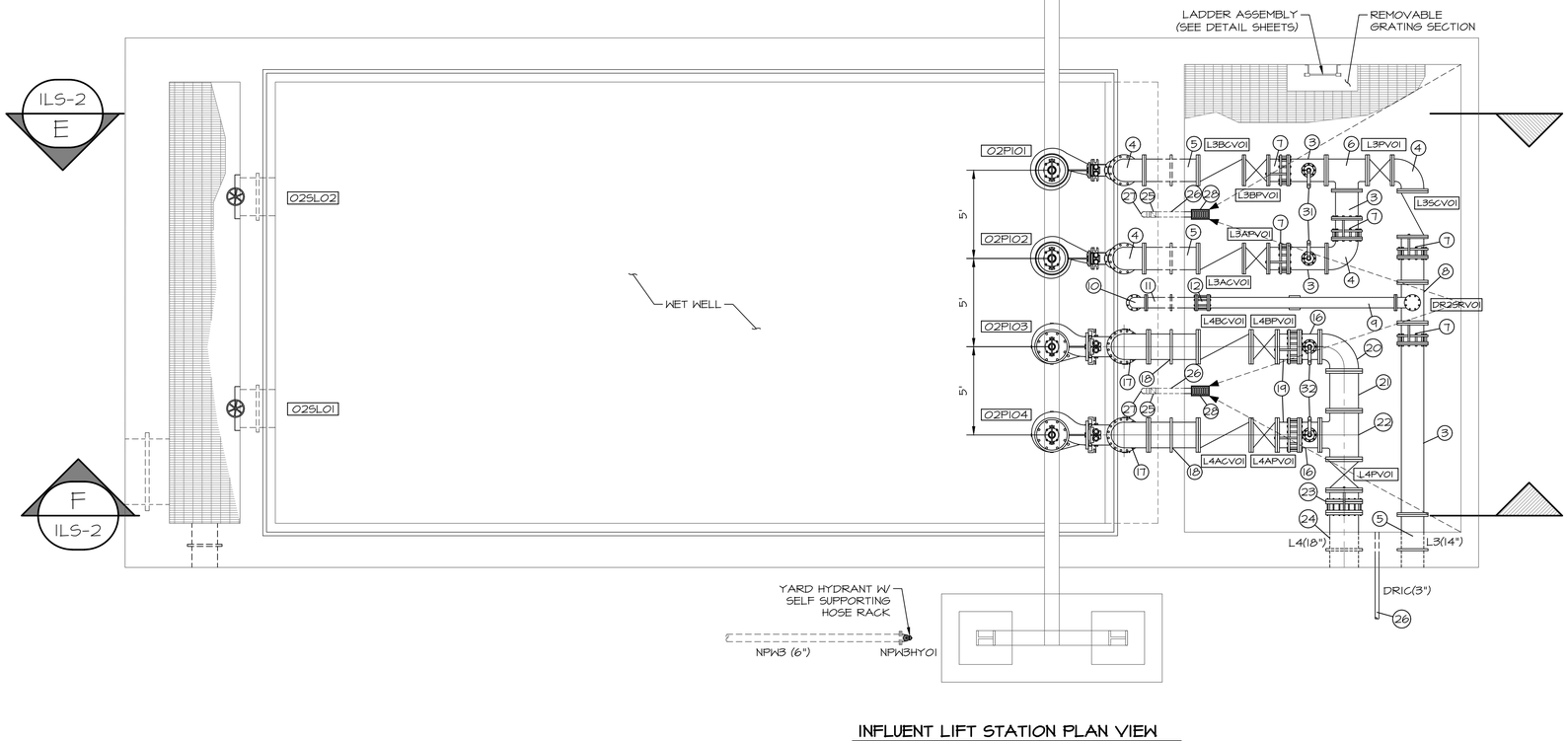

INFLUENT LIFT STATION PLAN VIEW

SCALE: 1/4"=1'-0"

WALL ENGINEERING
223 N. WASHINGTON, DURANT, OK 74701
OKLAHOMA CA #5413 EXP. JUNE 30, 2023

SUBMITTAL / REVISIONS:

DATE	BY	SUBMITTAL / REVISION
06/22	TL	ISSUED FOR BIDDING
07/22	JR	REVISED PER ADDENDUM NO. 1

SHAWNEE MUNICIPAL AUTHORITY
SOUTHSIDE IMPROVEMENTS
SHAWNEE, OKLAHOMA

INFLUENT LIFT STATION
PLAN VIEW

PROJECT NO.
SHN-20-01
DATE
06/22
DRAWN BY:
TL
CHECKED BY:
BW
REVIEWED BY:
DBW
SCALE:
1/4"=1'-0"

BAR IS ONE INCH ON ORIGINAL DRAWING
0" 1"
IF NOT ONE INCH ON THIS SHEET, ADJUST SCALES ACCORDINGLY

REGISTERED PROFESSIONAL ENGINEER
BRANDON WALL
21108
OKLAHOMA

SHEET
ILS-1

PIPING SCHEDULE STRUCTURE #2

NO.	ITEM	DESCRIPTION/NOTES
1	8" D.I. 22.5° BEND, FLxFL	
2	14"x8" D.I. ECCENTRIC REDUCER, FLxFL	ECCENTRIC
3	14" D.I. SPOOL, FLxFL	
4	14" D.I. 90° BEND, FLxFL	WITH RESTRAINED GLAND
5	14" D.I. WALL PIPE, FLxPE	WITH THRUST COLLAR
6	14" D.I. TEE, FLxFL	
7	14" D.I. DISMANTLING JOINT, FLxFL	
8	14"x14"x6" D.I. TEE, FLxFL	
9	6" D.I. SPOOL, FLxFL	
10	6" D.I. 90° BEND, FLxFL	
11	6" D.I. WALL PIPE, FLxPE	WITH THRUST COLLAR
12	6" D.I. DISMANTLING JOINT, FLxFL	
13	NOT USED	
14	NOT USED	
15	14"x16" D.I. ECCENTRIC REDUCER, FLxFL	ECCENTRIC
16	16" D.I. SPOOL, FLxFL	
17	16" D.I. 90° BEND, FLxFL	WITH RESTRAINED GLAND
18	16" D.I. WALL PIPE, FLxPE	WITH THRUST COLLAR
19	16" D.I. DISMANTLING JOINT, FLxFL	
20	16"X18" D.I. 90° REDUCING BEND, FLxFL	
21	18" D.I. SPOOL, FLxFL	
22	18"x18"x16" D.I. TEE, FLxFL	
23	18" D.I. DISMANTLING JOINT, FLxFL	
24	18" D.I. WALL PIPE, FLxPE	WITH THRUST COLLAR
25	3" PVC CHECK VALVE	
26	3" SCH. 80 PVC	
27	3" SHC. 80 PVC 90° BEND	
28	FLOOR DRAIN	NEENAH MODEL R-4937-A
29	NOT USED	
30	PIPE SUPPORT	AS NEEDED, SEE NOTE 7
31	2" AIR/VAC VALVE	WITH BALL VALVE AND COCK
32	3" AIR/VAC VALVE	WITH BALL VALVE AND COCK

PUMP SCHEDULE STRUCTURE #2

NO.	FLOW	TDH-DES	FUNCTION	CONTROL	HP	EFFICIENCY MIN.
02P101, 02P102	3,600 GPM	172'	PRIMARY	VFD	250	65%
02P103, 02P104	6,000 GPM	36'	STORMWATER	VFD	75	65%

PUMP NOTES:

1. PUMPS SHALL BE PROVIDED WITH BASE ELBOWS, S.S. RAILS, AND S.S. LIFTING CHAINS.
2. CONTRACTOR SHALL PROVIDE FITTINGS AS REQUIRED TO CONNECT BASE ELBOWS TO LIFT STATION PIPING.
3. PUMPS SHALL BE 460 VOLT THREE PHASE.
4. EACH PUMP SHALL BE EQUIPPED WITH A VARIABLE FREQUENCY DRIVE.

NOTES:

1. SEAL CONDUITS TO KEEP WET WELL GASSES OUT OF CONTROL PANEL.
2. LOCATE FLOATS AND CABLE HOLDER AWAY FROM INLET PIPE.
3. WETWELL FLOOR SHALL SLOPE TO PUMPS AS SHOWN.
4. ALL COMPONENTS SUBJECT SHALL BE DUCTILE IRON OR STAINLESS STEEL.
5. ALL ELECTRONICALLY ACTUATED VALVES TO ALSO BE EQUIPPED WITH HAND WHEEL OPERATORS.
6. ALL EXPOSED PIPING SHALL BE FULLY INSULATED AND HEAT TRACED TO PREVENT FROM FREEZING.
7. PIPE SUPPORT LOCATIONS ARE FOR REFERENCE ONLY & MORE MAY BE REQUIRED PER SPECIFICATION REQUIREMENTS AND/OR INDUSTRY STANDARD.
8. WETWELL TO BE EQUIPPED WITH A LEVEL TRANSDUCER AND 3 BACKUP FLOATS (LOW LEVEL, ALARM, INFLUENT CLOSE).
9. ALL HYDRANTS TO BE FURNISHED WITH STAINLESS STEEL SELF SUPPORTING HOSE RACK AND 50' OF HEAVY DUTY COMMERCIAL HOSE (1").

316L SS GATE SCHEDULE STRUCTURE #2

GATE IDENTIFICATION	02SL01	02SL02
GATE TYPE	SLUICE	SLUICE
GATE SIZE	24" Φ	24"
GATE SERIES	925	925
MOUNTING - FRAME	CW	CW
MOUNTING - INVERT	EMBEDED	EMBEDED
HOIST REQUIREMENT		
A. MANUAL	HC	HC
B. ELECTRIC	NO	NO
C. STEM COVER	L	L
D. POSITION COVER	MYLAR	MYLAR
E. STEM CONFIGURATION	RISING	RISING
LIFT MOUNTING	WALL	WALL
LEAKAGE STANDARD	AWWA	AWWA
OPERATING FLOOR ELEV.	988.00'	988.00'
INVERT ELEV.	959.50'	959.50'

INDEX
FE: EMBEDDED FRAME
HC: HAND CRANK
GS: GALVANIZED STEEL
CW: CHANNEL WALL
SQN: SQUARE NUT
L: LEXAN

VALVE SCHEDULE STRUCTURE #2

VALVE I.D.	VALVE TYPE	VALVE SIZE	MOTORIZED
L3PV01	PLUG	14"	NO
L3SCV01	SMART CHECK	14"	NA
L3APV01	PLUG	14"	NO
L3ACV01	CHECK	14"	NA
L3BPV01	PLUG	14"	NO
L3BCV01	CHECK	14"	NA
L4PV01	PLUG	18"	NO
L4APV01	PLUG	16"	NO
L4ACV01	CHECK	16"	NA
L4BPV01	PLUG	16"	NO
L4BCV01	CHECK	16"	NA
DR2PV01	PLUG	6"	NO
DR2SRV01	SURGE RELIEF	6"	NA
DR2FV01	FLAP VALVE	6"	NA

NOTES:

1. FIELD ROUTE ARV DRAINS TO WETWELL FLOOR DRAIN IN PVC PIPE (NOT SHOWN FOR CLARITY).

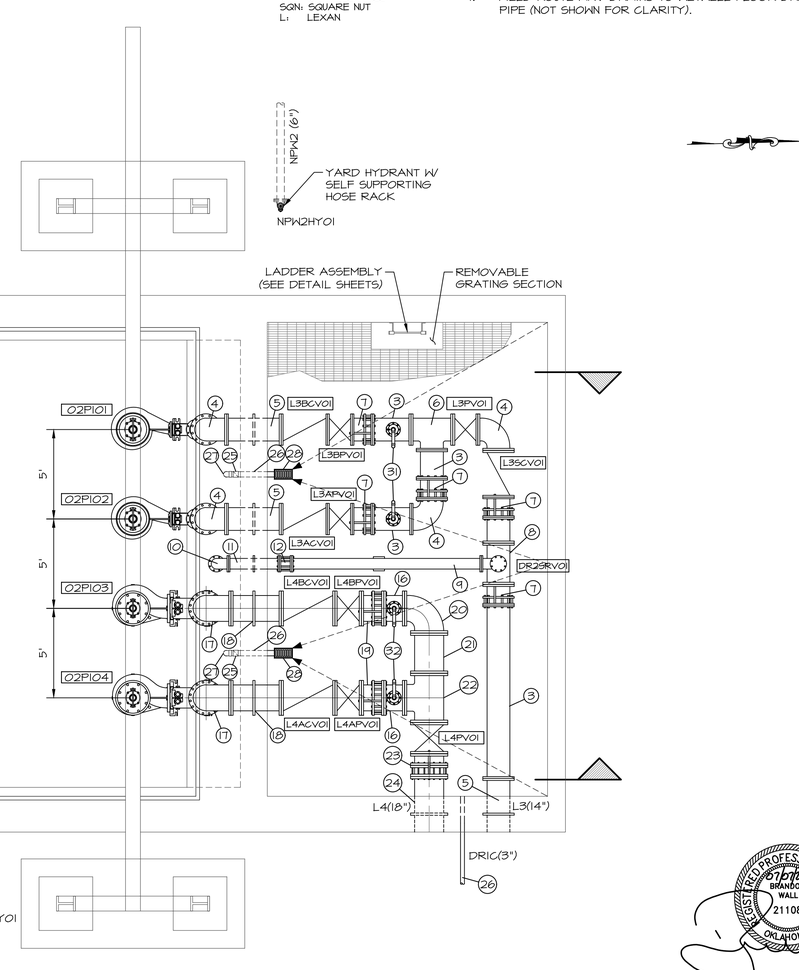

INFLUENT LIFT STATION PLAN VIEW
SCALE: 1/4"=1'-0"

WALL ENGINEERING
223 N. WASHINGTON, DURANT, OK 74701
OKLAHOMA CA #5413 EXP. JUNE 30, 2023

SUBMITTAL / REVISIONS:

DATE	BY	SUBMITTAL / REVISION
06/22	TL	ISSUED FOR BIDDING
07/22	JR	REVISED PER ADDENDUM NO. 1

SHAWNEE MUNICIPAL AUTHORITY
SOUTHSIDE IMPROVEMENTS
SHAWNEE, OKLAHOMA

INFLUENT LIFT STATION
PLAN VIEW

PROJECT NO.
SHN-20-01
DATE
06/22
DRAWN BY:
TL
CHECKED BY:
BW
REVIEWED BY:
DBW
SCALE:
1/4"=1'-0"

BAR IS ONE INCH ON ORIGINAL DRAWING
0" 1"
IF NOT ONE INCH ON THIS SHEET, ADJUST SCALES ACCORDINGLY

SHEET
ILS-1

REGISTERED PROFESSIONAL ENGINEER
07/01/22
BRANDON WALL
21108
OKLAHOMA

PIPING SCHEDULE STRUCTURE #2

NO.	ITEM	DESCRIPTION/NOTES
1	8" D.I. 22.5° BEND, FLxFL	
2	14"x8" D.I. ECCENTRIC REDUCER, FLxFL	ECCENTRIC
3	14" D.I. SPOOL, FLxFL	
4	14" D.I. 90° BEND, FLxFL	WITH RESTRAINED GLAND
5	14" D.I. WALL PIPE, FLxPE	WITH THRUST COLLAR
6	14" D.I. TEE, FLxFL	
7	14" D.I. DISMANTLING JOINT, FLxFL	
8	14"x14"x6" D.I. TEE, FLxFL	
9	6" D.I. SPOOL, FLxFL	
10	6" D.I. 90° BEND, FLxFL	
11	6" D.I. WALL PIPE, FLxPE	WITH THRUST COLLAR
12	6" D.I. DISMANTLING JOINT, FLxFL	
13	NOT USED	
14	NOT USED	
15	14"x16" D.I. ECCENTRIC REDUCER, FLxFL	ECCENTRIC
16	16" D.I. SPOOL, FLxFL	
17	16" D.I. 90° BEND, FLxFL	WITH RESTRAINED GLAND
18	16" D.I. WALL PIPE, FLxPE	WITH THRUST COLLAR
19	16" D.I. DISMANTLING JOINT, FLxFL	
20	16"X18" D.I. 90° REDUCING BEND, FLxFL	
21	18" D.I. SPOOL, FLxFL	
22	18"x18"x16" D.I. TEE, FLxFL	
23	18" D.I. DISMANTLING JOINT, FLxFL	
24	18" D.I. WALL PIPE, FLxPE	WITH THRUST COLLAR
25	3" PVC CHECK VALVE	
26	3" SCH. 80 PVC	
27	3" SHC. 80 PVC 90° BEND	
28	FLOOR DRAIN	NEENAH MODEL R-4937-A
29	NOT USED	
30	PIPE SUPPORT	AS NEEDED, SEE NOTE 7
31	2" AIR/VAC VALVE	WITH BALL VALVE AND COCK
32	3" AIR/VAC VALVE	WITH BALL VALVE AND COCK

PUMP SCHEDULE STRUCTURE #2

NO.	FLOW	TDH-DES	FUNCTION	CONTROL	HP	EFFICIENCY MIN.
02P101, 02P102	3,600 GPM	172'	PRIMARY	VFD	250	65%
02P103, 02P104	6,000 GPM	36'	STORMWATER	VFD	75	65%

PUMP NOTES:

1. PUMPS SHALL BE PROVIDED WITH BASE ELBOWS, S.S. RAILS, AND S.S. LIFTING CHAINS.
2. CONTRACTOR SHALL PROVIDE FITTINGS AS REQUIRED TO CONNECT BASE ELBOWS TO LIFT STATION PIPING.
3. PUMPS SHALL BE 460 VOLT THREE PHASE.
4. EACH PUMP SHALL BE EQUIPPED WITH A VARIABLE FREQUENCY DRIVE.

NOTES:

1. SEAL CONDUITS TO KEEP WET WELL GASSES OUT OF CONTROL PANEL.
2. LOCATE FLOATS AND CABLE HOLDER AWAY FROM INLET PIPE.
3. WETWELL FLOOR SHALL SLOPE TO PUMPS AS SHOWN.
4. ALL COMPONENTS SUBJECT SHALL BE DUCTILE IRON OR STAINLESS STEEL.
5. ALL ELECTRONICALLY ACTUATED VALVES TO ALSO BE EQUIPPED WITH HAND WHEEL OPERATORS.
6. ALL EXPOSED PIPING SHALL BE FULLY INSULATED AND HEAT TRACED TO PREVENT FROM FREEZING.
7. PIPE SUPPORT LOCATIONS ARE FOR REFERENCE ONLY & MORE MAY BE REQUIRED PER SPECIFICATION REQUIREMENTS AND/OR INDUSTRY STANDARD.
8. WETWELL TO BE EQUIPPED WITH A LEVEL TRANSDUCER AND 3 BACKUP FLOATS (LOW LEVEL, ALARM, INFLUENT CLOSE).
9. ALL HYDRANTS TO BE FURNISHED WITH STAINLESS STEEL SELF SUPPORTING HOSE RACK AND 50' OF HEAVY DUTY COMMERCIAL HOSE (1").

316L SS GATE SCHEDULE STRUCTURE #2

GATE IDENTIFICATION	02SLO1	02SLO2
GATE TYPE	SLUICE	SLUICE
GATE SIZE	24" Φ	24"
GATE SERIES	925	925
MOUNTING - FRAME	CW	CW
MOUNTING - INVERT	EMBEDED	EMBEDED
HOIST REQUIREMENT		
A. MANUAL	HC	HC
B. ELECTRIC	NO	NO
C. STEM COVER	L	L
D. POSITION COVER	MYLAR	MYLAR
E. STEM CONFIGURATION	RISING	RISING
LIFT MOUNTING	WALL	WALL
LEAKAGE STANDARD	AWWA	AWWA
OPERATING FLOOR ELEV.	988.00'	988.00'
INVERT ELEV.	959.50'	959.50'

INDEX
FE: EMBEDDED FRAME
HC: HAND CRANK
GS: GALVANIZED STEEL
CW: CHANNEL WALL
SQN: SQUARE NUT
L: LEXAN

VALVE SCHEDULE STRUCTURE #2

VALVE I.D.	VALVE TYPE	VALVE SIZE	MOTORIZED
L3PV01	PLUG	14"	NO
L3SCV01	SMART CHECK	14"	NA
L3APV01	PLUG	14"	NO
L3ACV01	CHECK	14"	NA
L3BPV01	PLUG	14"	NO
L3BCV01	CHECK	14"	NA
L4PV01	PLUG	18"	NO
L4APV01	PLUG	16"	NO
L4ACV01	CHECK	16"	NA
L4BPV01	PLUG	16"	NO
L4BCV01	CHECK	16"	NA
DR2PV01	PLUG	6"	NO
DR2SRV01	SURGE RELIEF	6"	NA
DR2FV01	FLAP VALVE	6"	NA

NOTES:

1. FIELD ROUTE ARV DRAINS TO WETWELL FLOOR DRAIN IN PVC PIPE (NOT SHOWN FOR CLARITY).

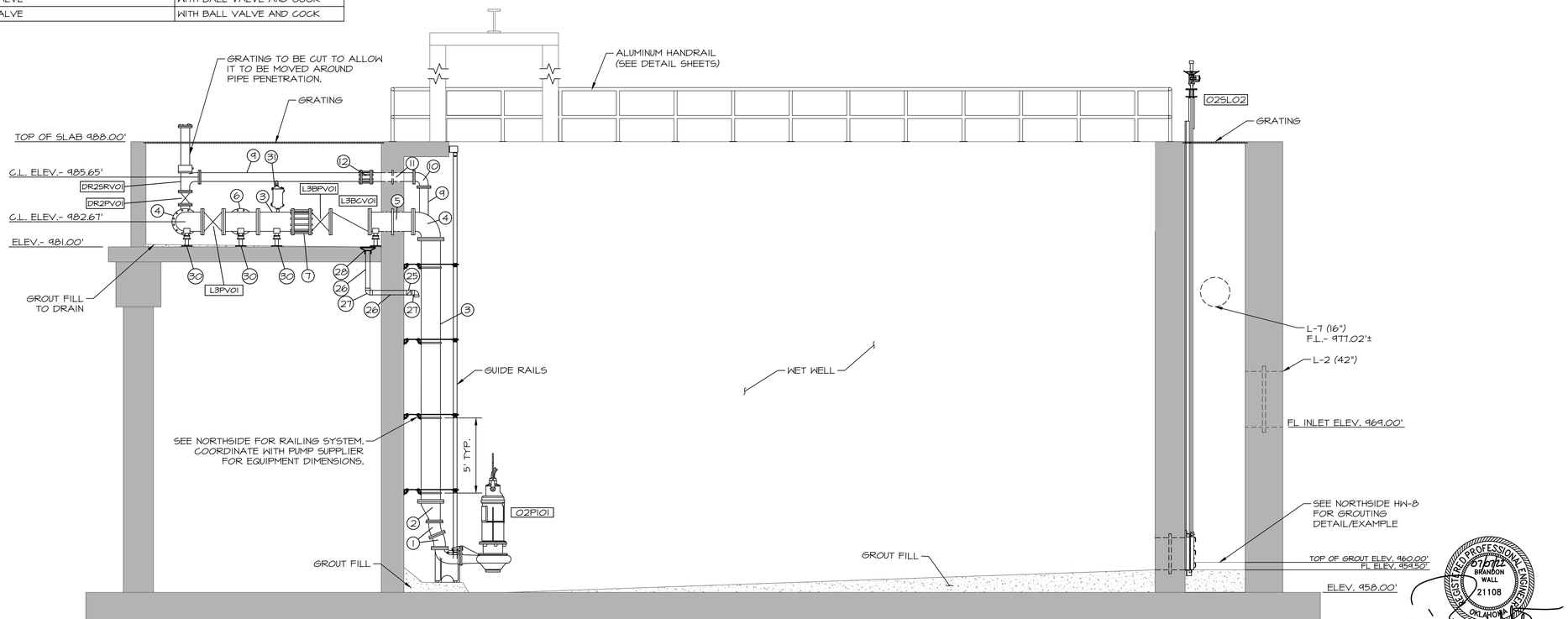

E / HW-1 SECTION
SCALE: 1/4"=1'-0"

WALL ENGINEERING
223 N. WASHINGTON, DURANT, OK 74701
OKLAHOMA CA #5413 EXP. JUNE 30, 2023

SUBMITTAL / REVISIONS:

DATE	BY	SUBMITTAL / REVISION
06/22	TL	ISSUED FOR BIDDING
07/22	JR	REVISED PER ADDENDUM NO. 1

SHAWNEE MUNICIPAL AUTHORITY
SOUTHSIDE IMPROVEMENTS
SHAWNEE, OKLAHOMA

INFLUENT LIFT STATION
LIFT STATION SECTION VIEW

PROJECT NO.
SHN-20-01
DATE
06/22
DRAWN BY:
TL
CHECKED BY:
BW
REVIEWED BY:
DBW
SCALE:
1/4"=1'-0"

BAR IS ONE INCH ON ORIGINAL DRAWING
0" 1"
IF NOT ONE INCH ON THIS SHEET, ADJUST SCALES ACCORDINGLY

SHEET
ILS-2A

REGISTERED PROFESSIONAL ENGINEER
BRANDON WALL
21108
OKLAHOMA
07/07/22

PIPING SCHEDULE STRUCTURE #2

NO.	ITEM	DESCRIPTION/NOTES
1	8" D.I. 22.5° BEND, FLxFL	
2	14"x8" D.I. ECCENTRIC REDUCER, FLxFL	ECCENTRIC
3	14" D.I. SPOOL, FLxFL	
4	14" D.I. 90° BEND, FLxFL	WITH RESTRAINED GLAND
5	14" D.I. WALL PIPE, FLxPE	WITH THRUST COLLAR
6	14" D.I. TEE, FLxFL	
7	14" D.I. DISMANTLING JOINT, FLxFL	
8	14"x14"x6" D.I. TEE, FLxFL	
9	6" D.I. SPOOL, FLxFL	
10	6" D.I. 90° BEND, FLxFL	
11	6" D.I. WALL PIPE, FLxPE	WITH THRUST COLLAR
12	6" D.I. DISMANTLING JOINT, FLxFL	
13	NOT USED	
14	NOT USED	
15	14"x16" D.I. ECCENTRIC REDUCER, FLxFL	ECCENTRIC
16	16" D.I. SPOOL, FLxFL	
17	16" D.I. 90° BEND, FLxFL	WITH RESTRAINED GLAND
18	16" D.I. WALL PIPE, FLxPE	WITH THRUST COLLAR
19	16" D.I. DISMANTLING JOINT, FLxFL	
20	16"X18" D.I. 90° REDUCING BEND, FLxFL	
21	18" D.I. SPOOL, FLxFL	
22	18"x18"x16" D.I. TEE, FLxFL	
23	18" D.I. DISMANTLING JOINT, FLxFL	
24	18" D.I. WALL PIPE, FLxPE	WITH THRUST COLLAR
25	3" PVC CHECK VALVE	
26	3" SCH. 80 PVC	
27	3" SHC. 80 PVC 90° BEND	
28	FLOOR DRAIN	NEENAH MODEL R-4937-A
29	NOT USED	
30	PIPE SUPPORT	AS NEEDED, SEE NOTE 7
31	2" AIR/VAC VALVE	WITH BALL VALVE AND COCK
32	3" AIR/VAC VALVE	WITH BALL VALVE AND COCK

PUMP SCHEDULE STRUCTURE #2

NO.	FLOW	TDH-DES	FUNCTION	CONTROL	HP	EFFICIENCY MIN.
02PI01, 02PI02	3,600 GPM	172'	PRIMARY	VFD	250	65%
02PI03, 02PI04	6,000 GPM	36'	STORMWATER	VFD	75	65%

PUMP NOTES:

1. PUMPS SHALL BE PROVIDED WITH BASE ELBOWS, S.S. RAILS, AND S.S. LIFTING CHAINS.
2. CONTRACTOR SHALL PROVIDE FITTINGS AS REQUIRED TO CONNECT BASE ELBOWS TO LIFT STATION PIPING.
3. PUMPS SHALL BE 460 VOLT THREE PHASE.
4. EACH PUMP SHALL BE EQUIPPED WITH A VARIABLE FREQUENCY DRIVE.

NOTES:

1. SEAL CONDUITS TO KEEP WET WELL GASSES OUT OF CONTROL PANEL.
2. LOCATE FLOATS AND CABLE HOLDER AWAY FROM INLET PIPE.
3. WETWELL FLOOR SHALL SLOPE TO PUMPS AS SHOWN.
4. ALL COMPONENTS SUBJECT SHALL BE DUCTILE IRON OR STAINLESS STEEL.
5. ALL ELECTRONICALLY ACTUATED VALVES TO ALSO BE EQUIPPED WITH HAND WHEEL OPERATORS.
6. ALL EXPOSED PIPING SHALL BE FULLY INSULATED AND HEAT TRACED TO PREVENT FROM FREEZING.
7. PIPE SUPPORT LOCATIONS ARE FOR REFERENCE ONLY & MORE MAY BE REQUIRED PER SPECIFICATION REQUIREMENTS AND/OR INDUSTRY STANDARD.
8. WETWELL TO BE EQUIPPED WITH A LEVEL TRANSDUCER AND 3 BACKUP FLOATS (LOW LEVEL, ALARM, INFLUENT CLOSE).
9. ALL HYDRANTS TO BE FURNISHED WITH STAINLESS STEEL SELF SUPPORTING HOSE RACK AND 50' OF HEAVY DUTY COMMERCIAL HOSE (1").

316L SS GATE SCHEDULE STRUCTURE #2

GATE IDENTIFICATION	02SL01	02SL02
GATE TYPE	SLUICE	SLUICE
GATE SIZE	24" Φ	24"
GATE SERIES	925	925
MOUNTING - FRAME	CW	CW
MOUNTING - INVERT	EMBEDED	EMBEDED
HOIST REQUIREMENT		
A. MANUAL	HC	HC
B. ELECTRIC	NO	NO
C. STEM COVER	L	L
D. POSITION COVER	MYLAR	MYLAR
E. STEM CONFIGURATION	RISING	RISING
LIFT MOUNTING	WALL	WALL
LEAKAGE STANDARD	AWWA	AWWA
OPERATING FLOOR ELEV.	988.00'	988.00'
INVERT ELEV.	959.50'	959.50'

INDEX
FE: EMBEDDED FRAME
HC: HAND CRANK
GS: GALVANIZED STEEL
CW: CHANNEL WALL
SQN: SQUARE NUT
L: LEXAN

VALVE SCHEDULE STRUCTURE #2

VALVE I.D.	VALVE TYPE	VALVE SIZE	MOTORIZED
L3PV01	PLUG	14"	NO
L3SCV01	SMART CHECK	14"	NA
L3APV01	PLUG	14"	NO
L3ACV01	CHECK	14"	NA
L3BPV01	PLUG	14"	NO
L3BCV01	CHECK	14"	NA
L4PV01	PLUG	18"	NO
L4APV01	PLUG	16"	NO
L4ACV01	CHECK	16"	NA
L4BPV01	PLUG	16"	NO
L4BCV01	CHECK	16"	NA
DR2PV01	PLUG	6"	NO
DR2SRV01	SURGE RELIEF	6"	NA
DR2FV01	FLAP VALVE	6"	NA

NOTES:

1. FIELD ROUTE ARV DRAINS TO WETWELL FLOOR DRAIN IN PVC PIPE (NOT SHOWN FOR CLARITY).

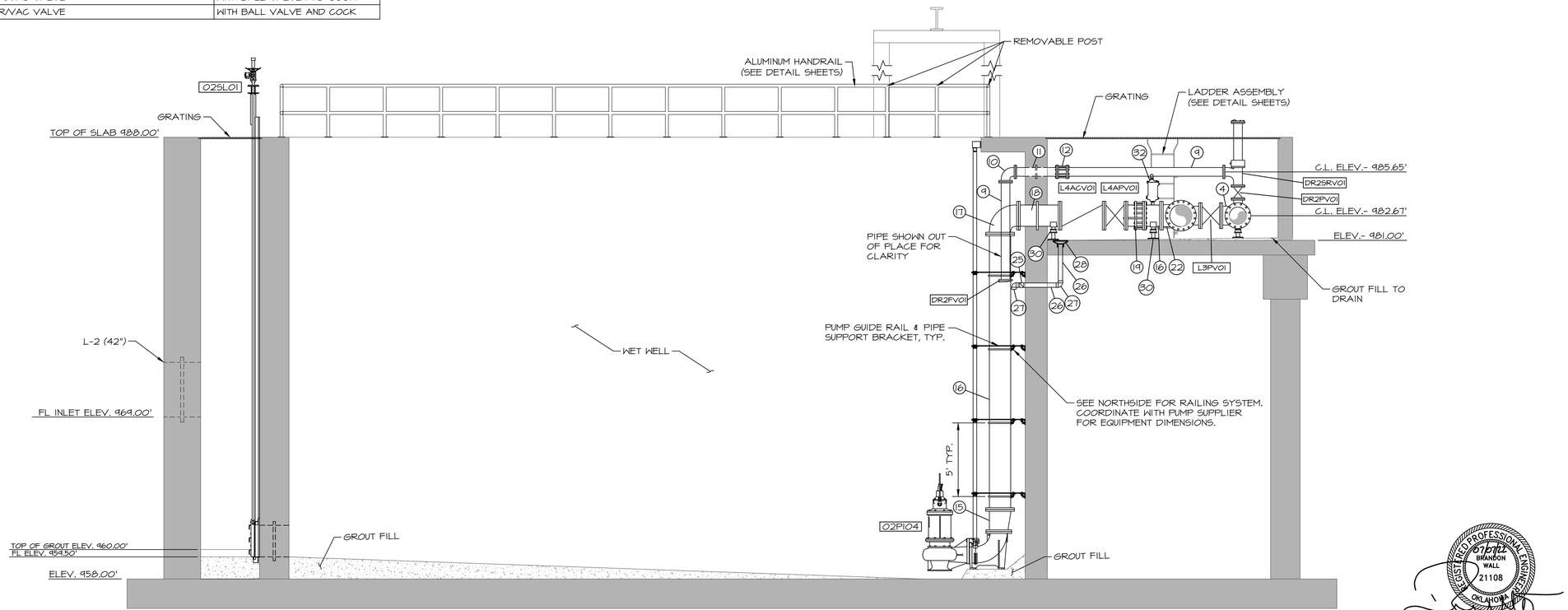

F / HW-1 SECTION
SCALE: 1/4"=1'-0"

WALL ENGINEERING
223 N. WASHINGTON, DURANT, OK 74701
OKLAHOMA CA #5413 EXP. JUNE 30, 2023

SUBMITTAL / REVISIONS:

	DATE	BY	SUBMITTAL / REVISION
1	06/22	TL	ISSUED FOR BIDDING
2	07/22	JR	REVISED PER ADDENDUM NO. 1

SHAWNEE MUNICIPAL AUTHORITY
SOUTHSIDE IMPROVEMENTS
SHAWNEE, OKLAHOMA

INFLUENT LIFT STATION
LIFT STATION SECTION VIEW

PROJECT NO.	SHN-20-01
DATE	06/22
DRAWN BY:	TL
CHECKED BY:	BW
REVIEWED BY:	DBW
SCALE:	1/4"=1'-0"

BAR IS ONE INCH ON ORIGINAL DRAWING
0" 1"
IF NOT ONE INCH ON THIS SHEET, ADJUST SCALES ACCORDINGLY

REGISTERED PROFESSIONAL ENGINEER
BRANDON WALL
21108
OKLAHOMA

SHEET
ILS-2B

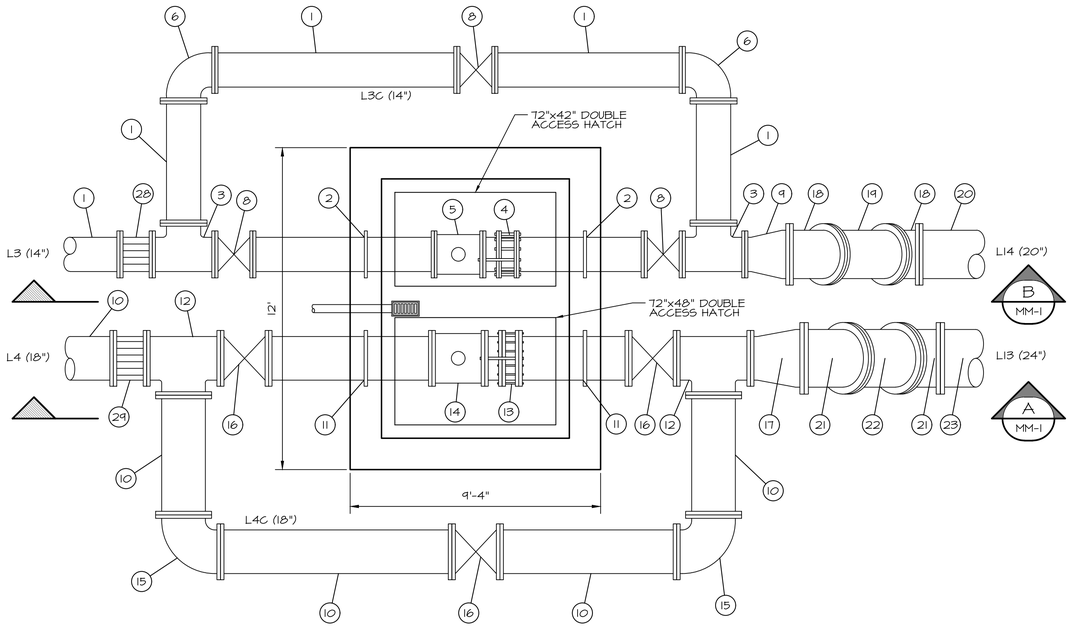

PLAN VIEW

SCALE: 3/8"=1'-0"

PIPING SCHEDULE STRUCTURE #3		
NO.	ITEM	DESCRIPTION/NOTES
1	14" D.I. SPOOL	
2	14" D.I. WALL PIPE, FLxPE	WITH THRUST COLLAR
3	14" D.I. TEE MJxMJ	
4	14" D.I. DISMANTLING JOINT, FLxFL	
5	14" ELECTROMAGNETIC FLOW METER	L3MM01
6	14" D.I. 90° BEND, MJxMJ	WITH RESTRAINED GLAND
8	14" PLUG VALVE, MJxMJ	L3PV02, L3PV03, L3CPV01
9	14"x20" D.I. ECCENTRIC REDUCER, MJxMJ	ECCENTRIC
10	18" D.I. SPOOL	
11	18" D.I. WALL PIPE, FLxMJ	WITH THRUST COLLAR
12	18" D.I. TEE, MJ	
13	18" D.I. DISMANTLING JOINT, FLxFL	
14	18" ELECTROMAGNETIC FLOW METER	L4MM01
15	18" D.I. 90° BEND, MJxMJ	WITH RESTRAINED GLAND
16	18" PLUG VALVE, MJ	L4PV02, L4PV03, L4CPV01
17	18"x24" D.I. ECCENTRIC REDUCER, MJxMJ	ECCENTRIC
18	20" D.I. 45° BEND, FLxMJ	
19	20" D.I. SPOOL, FLxFL	
20	20" D.I. SPOOL, MJxPE	
21	24" D.I. 45° BEND, MJxFL	
22	24" D.I. SPOOL, FLxFL	
23	24" D.I. SPOOL, MJxPE	
24	3" SCH. 80 PVC	
25	3" SHC. 80 PVC 90° BEND	
26	FLOOR DRAIN	NEENAH MODEL R4981-A
27	PIPE SUPPORT	AS NEEDED
28	14" D.I. FLANGED COUPLING ADAPTER, MJxMJ	
29	18" D.I. FLANGED COUPLING ADAPTER, MJxMJ	

NOTES:

1. FIELD ROUTE SCH. 80 PVC DRAIN PIPE TO INFLUENT LIFT STATION WETWELL WITH CHECK VALVE.
2. UNDERGROUND FITTINGS SHALL BE MECHANICAL JOINT UNLESS OTHERWISE NOTED.
3. FOUNDATION PREP PER GENERAL NOTES.

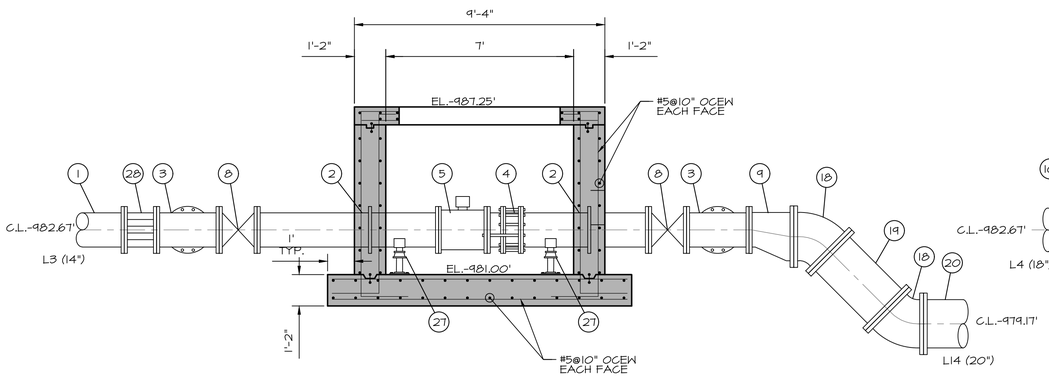

B SECTION (MM-1)

SCALE: 3/8"=1'-0"

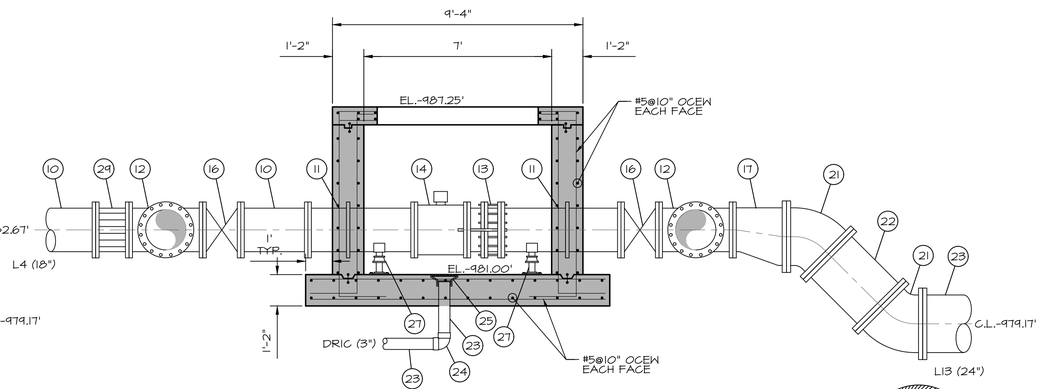

A SECTION (MM-1)

SCALE: 3/8"=1'-0"



WALL ENGINEERING
223 N. WASHINGTON, DURANT, OK 74701
OKLAHOMA CA #5413 EXP. JUNE 30, 2023

SUBMITTAL / REVISIONS:

DATE	BY	SUBMITTAL / REVISION
06/22	TL	ISSUED FOR BIDDING
07/22	JR	REVISED PER ADDENDUM NO. 1

SHAWNEE MUNICIPAL AUTHORITY
SOUTHSIDE IMPROVEMENTS
SHAWNEE, OKLAHOMA

MAGNETIC FLOW METER
FEB/EFFLUENT MAG METER
PLAN AND SECTIONS

PROJECT NO.
SHN-20-01
DATE
06/22
DRAWN BY:
TL
CHECKED BY:
BW
REVIEWED BY:
DBW
SCALE:
AS SHOWN

BAR IS ONE INCH ON ORIGINAL DRAWING
0" 1"
IF NOT ONE INCH ON THIS SHEET, ADJUST SCALES ACCORDINGLY

SHEET
MM-1

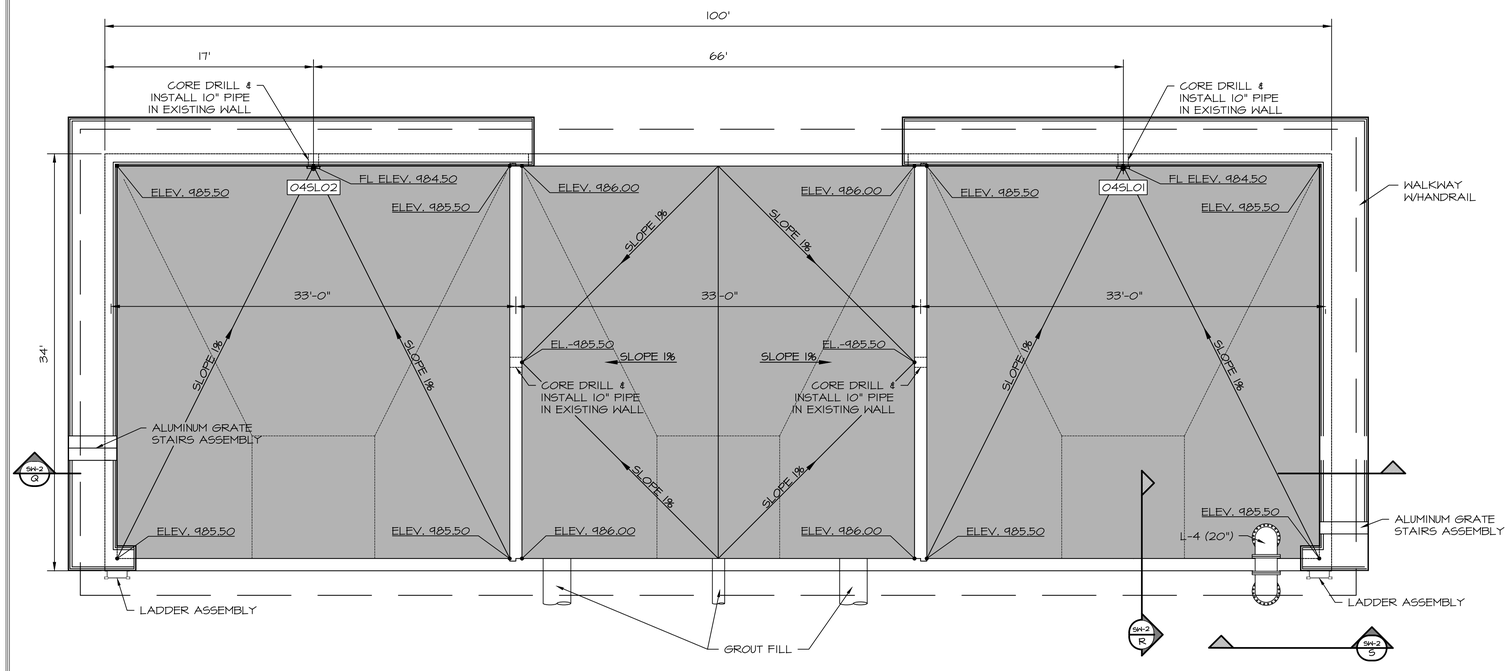

PROPOSED BASIN
SCALE: 1:70

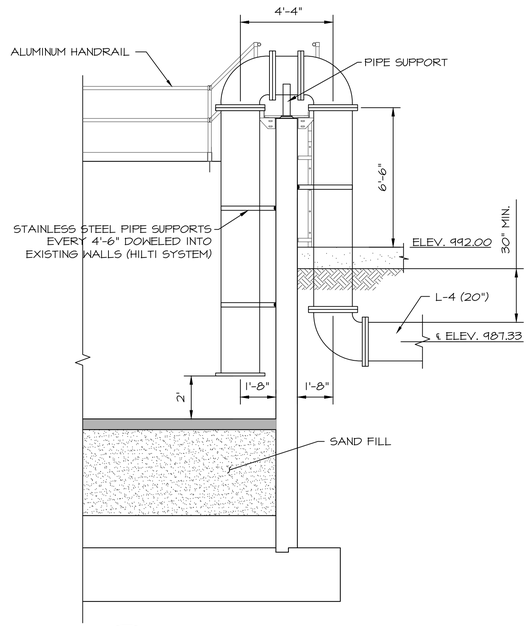

R SN-2 PROPOSED BASIN SECTION
SCALE: 1:40

316L SS GATE SCHEDULE PROPOSED BASIN		
GATE IDENTIFICATION	045L01	045L02
GATE TYPE	SLUICE	SLUICE
GATE SIZE	10" Φ	10" Φ
GATE SERIES	925	925
MOUNTING - FRAME	CW	CW
MOUNTING - INVERT	EMBEDED	EMBEDED
HOIST REQUIREMENT		
A. MANUAL	HW	HW
B. ELECTRIC	NO	NO
C. STEM COVER	SS	SS
D. POSITION COVER	MYLAR	MYLAR
E. STEM CONFIGURATION	RISING	RISING
LIFT MOUNTING	WALL	WALL
LEAKAGE STANDARD	AWWA	AWWA
OPERATING FLOOR ELEV.	996.17'	996.17'
INVERT ELEV.	984.50'	984.50'

NOTE:
1. EXTEND HANDWHEEL TO 6" ABOVE WALKWAY LEVEL.

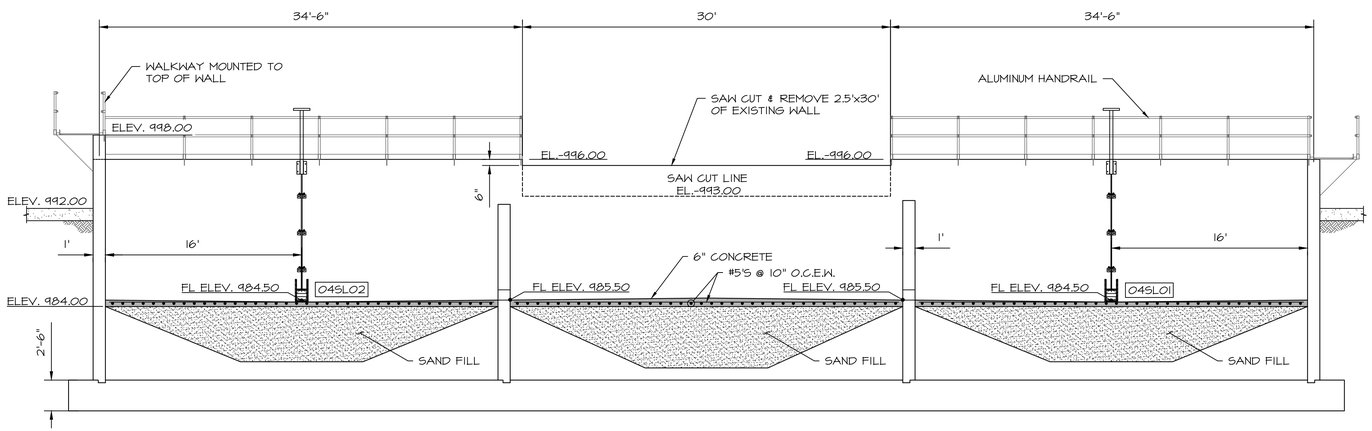

Q SN-2 PROPOSED BASIN SECTION
SCALE: 1:70

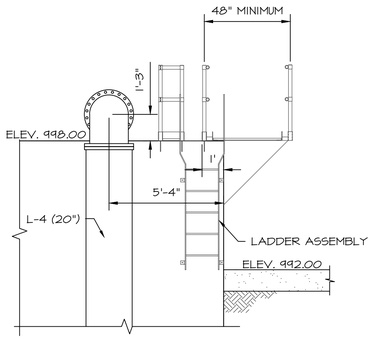

S SN-2 PROPOSED BASIN SECTION
SCALE: 1:40

NOTE:
1. ENTIRE SYSTEM OF WALKWAY, HANDRAIL, STAIRS & LADDERS TO BE SUPPLIED AS A COMPLETE SYSTEM (INCLUDING WALL ATTACHMENT) FROM A SINGLE SUPPLIER & BE STAMPED BY OKLAHOMA STRUCTURAL ENGINEER.

2. SLOPED CONCRETE FLOOR MAY BE FORMED & POURED OR GROUTED.



WALL ENGINEERING
223 N. WASHINGTON, DURANT, OK 74701
OKLAHOMA CA #5413 EXP. JUNE 30, 2023

SUBMITTAL / REVISIONS:

DATE	BY	SUBMITTAL / REVISION
06/22	TL	ISSUED FOR BIDDING
07/22	JR	REVISED PER ADDENDUM NO. 1

SHAWNEE MUNICIPAL AUTHORITY
SOUTHSIDE IMPROVEMENTS
SHAWNEE, OKLAHOMA

PROPOSED PRIMARY FLOW EQUALIZATION BASIN

PROJECT NO.
SHN-20-01
DATE
06/22
DRAWN BY:
TL
CHECKED BY:
BW
REVIEWED BY:
DBW
SCALE:
AS SHOWN

BAR IS ONE INCH ON ORIGINAL DRAWING
0" 1"
IF NOT ONE INCH ON THIS SHEET, ADJUST SCALES ACCORDINGLY

SHEET
SW-2

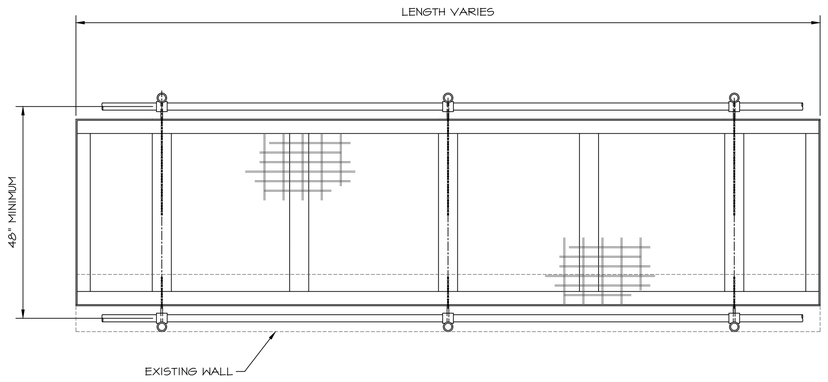

TOP VIEW

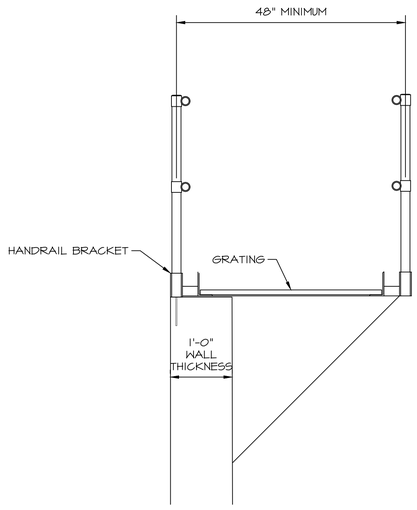

SECTION VIEW

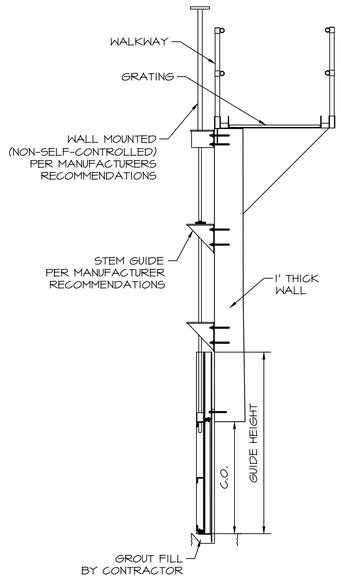

SLIDE GATE DETAIL



WALL ENGINEERING
223 N. WASHINGTON, DURANT, OK 74701
OKLAHOMA CA #6413 EXP. JUNE 30, 2023

SUBMITTAL / REVISIONS:

DATE	BY	SUBMITTAL / REVISION
06/22	TL	ISSUED FOR BIDDING
07/22	JR	REVISED PER ADDENDUM NO. 1

SHAWNEE MUNICIPAL AUTHORITY
SOUTHSIDE IMPROVEMENTS
SHAWNEE, OKLAHOMA

PRIMARY FLOW
EQUALIZATION BASIN
MISCELLANEOUS DETAILS

PROJECT NO.
SHN-20-01

DATE
06/22

DRAWN BY:
TL

CHECKED BY:
BW

REVIEWED BY:
DBW

SCALE:
NOT TO SCALE

BAR IS ONE INCH ON ORIGINAL DRAWING
0" 1"
IF NOT ONE INCH ON THIS SHEET, ADJUST SCALES ACCORDINGLY

SHEET
SW-3

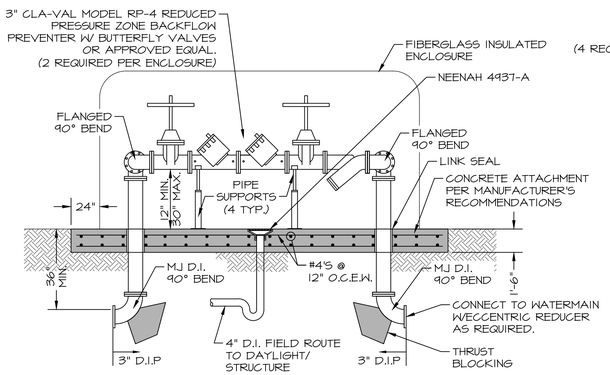

SIDE VIEW

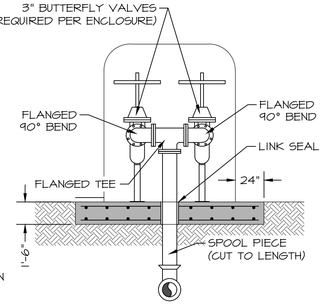

END VIEW

MINIMUM RESTRAINED LENGTH (FT) FOR A TEST PRESSURE OF 100 PSIG						
NOMINAL PIPE SIZE	90 DEGREE	WYE OR 45 DEGREE	22-1/2 DEGREE	11-1/4 DEGREE	TEE BRANCH	TERMINAL PLUG
6	23	18	18	18	39	59
8	30	18	18	18	51	6'-4"
10	36	18	18	18	61	92
12	41	18	18	18	71	107
20	62	26	18	18	110	164
24	72	30	18	18	128	192
30	85	35	18	18	152	228
36	96	40	18	18	175	262
48	118	48	23	18	214	322
54	131	54	26	18	348	344

NOTES:

1. RESTRAIN ALL DUCTILE IRON FITTINGS.
2. TABULATED VALUES ARE FOR 100 PSIG TEST PRESSURE. FOR VALUES AT PRESSURES OTHER THAN 100 PSID, MULTIPLY TABLE VALUES BY THE RATIO OF ACTUAL TEST PRESSURE TO 100 PSIG. TEST PRESSURES FOR EACH SERVICE ARE DEFINED IN THE PIPING SCHEDULE.
3. WHERE LISTED VALUES, OR CALCULATED VALUES (SEE ABOVE), ARE LESS THAN ON STANDARD FULL PIPE SEGMENT (18 FEET), RESTRAIN THE FITTING ONLY.
4. RESTRAINT LENGTHS APPLY TO PIPE RUNS ON EACH SIDE OF A CHANGE IN DIRECTION.
5. WHERE THE PIPING LAYOUT HAS RESTRAINED JOINT LENGTHS FOR TWO OR MORE FITTINGS TO OVERLAP, THRUST RESTRAIN ALL PIPING BETWEEN THE OTHER FITTINGS. ASSUME 1/2 OF THE RESTRAINED PIPE LENGTH BETWEEN THE TWO FITTINGS RESTRAINS EACH OF THE FITTINGS AND ADD ADDITIONAL RESTRAINED JOINT LENGTH TO THE OUTER LEGS OF THE OUTER FITTINGS TO EQUAL THE TOTAL REQUIRED FOR ALL FITTINGS.
6. THRUST RESTRAINT TABLE REFERS TO NEW PIPING.

BACKFLOW PREVENTER

N.T.S

NOTES:

1. INSTALL INSIDE INSULATED FIBERGLASS ENCLOSURE, SUBMITTAL REQUIRED.
2. ENCLOSURE TO HAVE ACCESS DOORS ON EACH SIDE.
3. SLOPE FLOOR TO DRAIN WITH CHECK VALVE WHERE NECESSARY (TIDE FLEX)
4. ALL CONNECTIONS SHALL BE THRUST RESTRAINED.

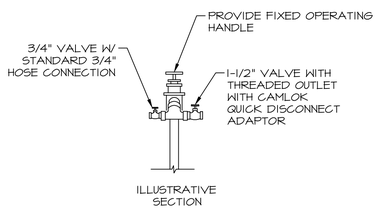

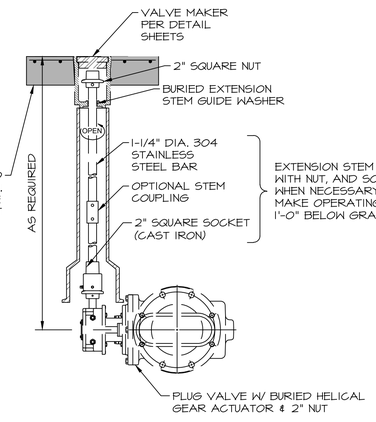

BURIED MANUAL PLUG VALVE

N.T.S

BURIED DUCTILE IRON PIPE THRUST RESTRAINT TABLE

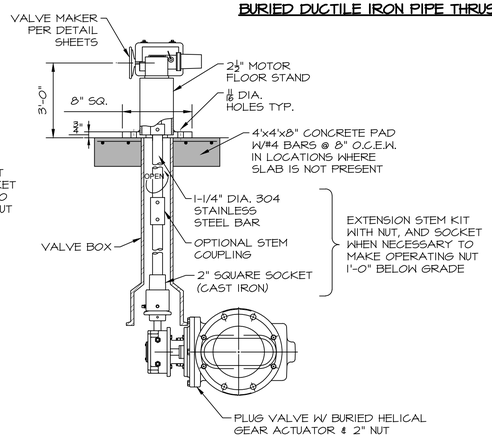

BURIED ELECTRICALLY ACTUATED PLUG VALVE

N.T.S

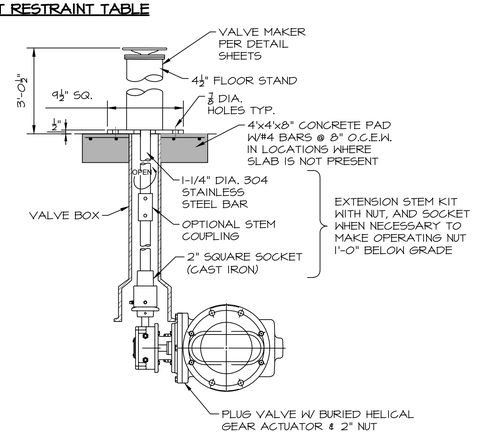

BURIED VALVE WITH PEDESTAL MOUNTED OPERATOR

N.T.S

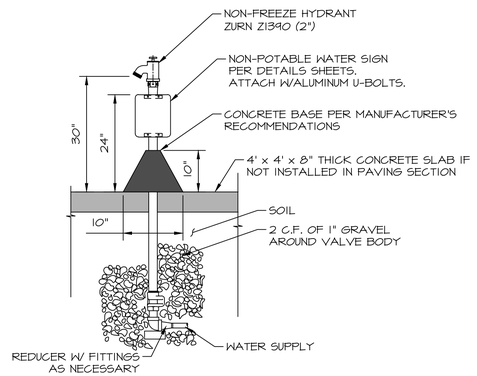

HOSE BIB-NON POTABLE

N.T.S

NOTES:

1. ALL HYDRANTS SHALL BE PROVIDED W/ HOSE RACK.
2. SIGN IS ROTATED FOR CLARITY, ORIENTATION SHALL BE VISIBLE FROM FRONT OF HYDRANT.
3. CONTRACTOR SHALL PROVIDE A 3/4" AND 1-1/2" THREADED OUTLET WITH CAMLOK QUICK DISCONNECT ADAPTERS AND VALVE ON EACH YARD HYDRANT IN ADDITION TO THE 2" HYDRANT VALVE. YARD HYDRANT SHALL BE ZURN Z1390 SERIED OR APPROVED EQUAL.
4. YARD HYDRANTS LOCATED NEXT TO STRUCTURES SHALL BE SECURELY MOUNTED TO THE STRUCTURES WITH STAINLESS STEEL FASTENERS.
5. YARD HYDRANTS SHALL BE PROVIDED WITH WHEEL TYPE HANDLE.
6. PROVIDE CASING GUARD AROUND YARD HYDRANT ABOVE GRADE SURFACE.
7. HYDRANT SHALL BE DESIGNATED WITH A "NON-POTABLE WATER" SIGN. SEE DETAIL SHEETS.

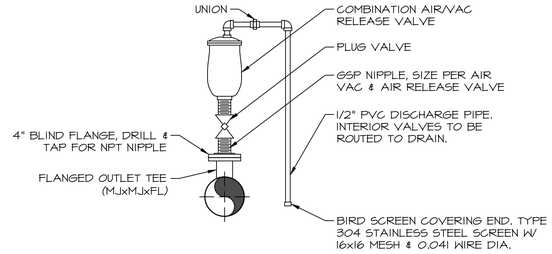

AIR VACUUM & RELEASE VALVE (3" & SMALLER)

N.T.S

NOTES:

1. VALVE SIZE SHALL BE AS INDICATED ON THE DRAWINGS.
2. SERVICE TAP & PLUG VALVE SHALL MATCH VALVE INLET SIZE.
3. FIELD ROUTE DISCHARGE PIPE TO DRAIN/DAYLIGHT.



WALL ENGINEERING
223 N. WASHINGTON, DURANT, OK 74701
OKLAHOMA CA #5413 EXP. JUNE 30, 2023

SUBMITTAL / REVISIONS:

	DATE	BY	SUBMITTAL / REVISION
1	06/22	TL	ISSUED FOR BIDDING
2	07/22	JR	REVISED PER ADDENDUM NO. 1

SHAWNEE MUNICIPAL AUTHORITY
SOUTHSIDE IMPROVEMENTS
SHAWNEE, OKLAHOMA

MISCELLANEOUS DETAILS

PROJECT NO.
SHN-20-01

DATE
06/22

DRAWN BY:
JR

CHECKED BY:
TA

REVIEWED BY:
DBW

SCALE:
AS NOTED

BAR IS ONE INCH ON ORIGINAL DRAWING
0" 1"
IF NOT ONE INCH ON THIS SHEET, ADJUST SCALES ACCORDINGLY

SHEET

DT-7

WALL ENGINEERING, LLC
223 N Washington Ave
Durant, OK 74702
Ph: 580-924-1800

ADDENDUM NO. 2

TO: ALL PLAN HOLDERS

RE: Shawnee Wastewater System Improvements

DATE: July 21, 2022

The Plans, Specifications and Contract Documents for the above referenced project are hereby modified / clarified as follows.

Please note that changes made to the plans/specs added by addendum will only contain a summary of changes in addendum verbiage and may not contain all modifications. It is the Contractor's responsibility to thoroughly review the revised sheets/specs.

General

A2 – 1 **Approval:** Cummins has been approved as a supplier of backup power equipment.

A2 – 2 **Information:** No additional equipment has been approved beyond the named equipment in the Specifications.

A2 – 3 **Modification:** The largest eight (8) project materials / equipment vendors ranked by taxable value will be direct paid by the Owner and thereby receive a tax-exempt status letter. Do not include applicable taxes in the bid.

A2 – 4 **Information:** Sludge management plan information has been added to CivCast. It contains the site information and summary sludge management plan data.

Northside WWTP

A2 – 5 **Clarification:** Plug valves on piping carrying sludge shall be full port.

A2 – 6 **Addition:** All floor coatings specified in wet areas shall have slip resistant additive (by Tnemec.)

A2 – 7 **Modification:** Section 43_23_31.35 – Replace with revised spec. Pump conditions have been modified

A2 – 8 **Modification:** Millwork referenced on Sheet A602, A603 & A701 is hereby revised as follows:

1. Cabinets – Powder coated steel casework
2. Tops – 1" epoxy resin certified as chemical resistant
3. Island (in 118) to be 5' width

4. Glassware washers, Faucets and Fixtures to be commercial laboratory grade
5. Approved Suppliers / Installers
    a. Best Companies, Edmond, OK (405) 840-1077
    b. MGC, Inc, Addison, TX (214) 477-4784
    c. PSA Lab Furniture, New Berlin, WI (262) 204-7660

A2 – 9 **Modification:** Structural

1. Refer to Drawing ELS-S6, and replace with the revised sheet.
2. Refer to Drawing HW-S10, and replace with the revised sheet.

A2 – 10 **Modification:** Civil

1. Refer to Drawing C-12, and replace with the revised sheet.
2. Refer to Drawing C-13, and replace with the revised sheet.
3. Refer to Drawing SBR-1 and replace with the revised sheet.
4. Refer to Drawing SBR-2 and replace with the revised sheet.
5. Refer to Drawing AD-2 and replace with the revised sheet.
6. Refer to Drawing FEB-2 and replace with the revised sheet.
7. Refer to Drawing SHF-2 and replace with the revised sheet.
8. Refer to Drawing DT-6 and replace with the revised sheet.

A2 – 11 **Modification:** Electrical & Instrumentation modification:

1. Refer to Drawing P10, and replace with the revised sheet.
2. Refer to Drawing P11, and replace with the revised sheet.
3. Refer to Drawing P12, and replace with the revised sheet.
4. Refer to Drawing P13, and replace with the revised sheet.
5. Refer to Drawing P19, and replace with the revised sheet.
6. Refer to Drawing E1, and replace with the revised sheet.
7. Refer to Drawing EA1, and replace with the revised sheet.
8. Refer to Drawing EL1, and replace with the revised sheet.
9. Refer to Drawing EN5, and replace with the revised sheet.
10. Refer to Drawing EP4, and replace with the revised sheet.
11. Refer to Drawing ES1, and replace with the revised sheet.
12. Refer to Drawing ES6, and replace with the revised sheet.
13. Refer to Drawing ES7, and replace with the revised sheet.
14. Refer to Drawing ES8, and replace with the revised sheet.

<u>Southside</u>

A2 – 12 **Clarification:** Sludge removal from stormwater basin will be paid by the CY from Bid Item #8. Section 33_01_33 has been revised.

A2 – 13 **Clarification:** Plug Valves internal to influent lift station / vault shall be full port.

A2 – 14 **Modification:** Electrical & Instrumentation modification:

1. Refer to Drawing C-9, and replace with the revised sheet.
2. Refer to Drawing SW-4, and replace with the revised sheet.
3. Refer to Drawing SW-4A, and replace with the revised sheet.

A2 – 15 Modification: Electrical & Instrumentation modification:

1. Refer to Drawing E4, and replace with the revised sheet.
2. Refer to Drawing E5, and replace with the revised sheet.
3. Refer to Drawing E6, and replace with the revised sheet.
4. Refer to Drawing E7, and replace with the revised sheet.
5. Refer to Drawing E8, and replace with the revised sheet.
6. Refer to Drawing E11, and replace with the revised sheet.
7. Refer to Drawing E13, and replace with the revised sheet.
8. Refer to Drawing E14, and replace with the revised sheet.
9. Refer to Drawing E15, and replace with the revised sheet.
10. Refer to Drawing E16, and replace with the revised sheet.
11. Refer to Drawing E17, and replace with the revised sheet.
12. Refer to Drawing E22, and replace with the revised sheet.
13. Refer to Drawing M1, and replace with the revised sheet.

Conveyance

A2 – 16 Addition: Connection to existing sewermain noted on sheet 42 (near sta 47+50) shall be made by installing a 30" x 24" D.I. Wye in existing 30" discharge main at connection point so that both lines may be operational during testing/startup. Wye to be removed/plugged upon completion of startup/commissioning.

Should you have any additional questions about the above modifications and their intent, please post to the CivCast website.

Issued by:
Wall Engineering, LLC



Brandon Wall, P.E.
President

BID FORM SECTION 5.01 - BID PROPOSAL - ATTACHMENT "A" (ADDN 2) SUMMARY OF BID PRICING (ALL BLANKS MUST BE FILLED)	
SECTION	**BID PRICE**
GENERAL BID ITEMS	
NORTHSIDE	
COLLECTION SYSTEM LIFT STATIONS	
SOUTHSIDE	
CONVEYANCE	
TOTAL PROJECT BID PRICE	

I, General Contractor, do hereby certify that the above TOTAL BID PRICE stated above constitutes all labor, equipment and materials for a complete and operable system as defined by the Contract Documents. Additionally, I certify that any items not specifically outined have been included in the most applicable item, that no items are outstanding that would require an addition to the stated TOTAL BID PRICE, and that TOTAL BID PRICE is not conditional in any manner and constitutes the Lump Sum for completion of work for a complete and operable system as defined by the Contract Documents.

BY:_____ TITLE_____ DATE:_____

BID FORM SECTION 5.01 - BID SUMMARY SHEET - ATTACHMENT "A" GENERAL ITEMS APPLYING TO NORTHSIDE, SOUTHSIDE & CONVEYANCE					
#	**Bid Item, Complete per Plans & Specifications**	**Unit**	**Quantity**	**Cost/Unit**	**Total Cost**
1	SWPPP & Erosion Control	LSUM	1		
2	Mobilization, Demobilization, Bonds & Insurance	LSUM	1		
3	Construction Staking	LSUM	1		
4	Construction Traffic Control	LSUM	1		
5	Trench Safety System	LSUM	1		
6	Materials Testing & Disinfection	LSUM	1		
7	CCTV Security System	LSUM	1		
8	Waste Sludge Handling & Disposal from Existing Treatment Units Prior to Final Demolition (Northisde & Southside)	CY	16000		
9	Hydroexcavation for Utilities Location	LF	7500		
10	Dewatering	LSUM	1		
11	Work Change Directives	ALW	N/A	N/A	$523,525.00
12	New Electrical Service Extension & Transformer	ALW	N/A	N/A	$165,800.00
13	Lab Equipment	ALW	N/A	N/A	$87,830.00
14	Furniture, Fixtures & Equipment	ALW	N/A	N/A	$186,870.00
15	Rock Removal	ALW	N/A	N/A	$240,975.00
SUBTOTAL - GENERAL ITEMS					

BID FORM SECTION 5.01 - BID PROPOSAL - ATTACHMENT "A" NORTHSIDE					
#	**Bid Item, Complete per Plans & Specifications**	**Unit**	**Quantity**	**Cost/Unit**	**Total Cost**
16	Headworks	1	LSUM		
17	Influent Lift Station including Flow Meter Structure	1	LSUM		
18	Headworks & Influent Lift Station Cover & Bridge Crane	1	LSUM		
19	SBR Pre-Equalization Basin	1	LSUM		
20	SBR Flow Control Structure including SBR Transfer Pumps	1	LSUM		
21	Sequencing Batch Reactor System (SBR)	1	LSUM		
22	SBR Post-Equalization Basin	1	LSUM		
23	UV Disinfection & Non-Potable Water System with Building	1	LSUM		
24	Flow Measurement - Parshall Flume	1	LSUM		
25	Effluent Lift Station w/ Cascade Aeration	1	LSUM		
26	Effluent Lift Station Cover & Hoist	1	LSUM		
27	Effluent Lift Station Flow Meter Stucture	1	LSUM		
28	Waste Sludge Pump Station (WAS)	1	LSUM		
29	Aerobic Digester (AD)	1	LSUM		
30	SBR/AD Blowers	1	LSUM		
31	SBR/AD Blower Building	1	LSUM		
32	Belt Filter Press & Sludge Loading with Building	1	LSUM		
33	Wet Weather Flow Equalization Basin (FEB)	1	LSUM		

BID FORM SECTION 5.01 - BID PROPOSAL - ATTACHMENT "A" NORTHSIDE					
#	**Bid Item, Complete per Plans & Specifications**	**Unit**	**Quantity**	**Cost/Unit**	**Total Cost**
34	FEB Return Lift Station	1	LSUM		
35	FEB Return Lift Station Flow Meter Stucture	1	LSUM		
36	Administration/Lab/Electrical Building	1	LSUM		
37	Yard Piping	1	LSUM		
38	Controls & Instrumentation including SCADA	1	LSUM		
39	Electrical	1	LSUM		
40	Standby Power Generator w/ ATS (15 KW)	1	LSUM		
41	Standby Power Generator w/ ATS (1750 KW)	1	LSUM		
42	Site Grading & Drainage	1	LSUM		
43	Site Concrete Paving	1	LSUM		
44	Security fencing, Gates & Signs	1	LSUM		
45	Landscaping	1	LSUM		
46	Dewatering	1	LSUM		
47	Demolition (Initial) including Sludge Disposal	1	LSUM		
48	Demolition (Final) NOT inlcuding Sludge Disposal	1	LSUM		
				SUBTOTAL - NORTHSIDE	

BID FORM SECTION 5.01 - BID PROPOSAL - ATTACHMENT "A" COLLECTION SYSTEM LIFT STATIONS					
#	**Bid Item, Complete per Plans & Specifications**	**Unit**	**Quantity**	**Cost/Unit**	**Total Cost**
49	Collection System Lift Station Controls & SCADA	1	LSUM		
SUBTOTAL - COLLECTION SYSTEM LIFT STATIONS					

BID FORM SECTION 5.01 - BID PROPOSAL - ATTACHMENT "A" SOUTHSIDE					
#	**Bid Item, Complete per Plans & Specifications**	**Unit**	**Quantity**	**Cost/Unit**	**Total Cost**
50	Headworks	1	LSUM		
51	Headworks Cover & Hoist	1	LSUM		
52	Influent Lift Station	1	LSUM		
53	Flow Meter Structure	1	LSUM		
54	Primary FEB Including Concrete Lining	1	LSUM		
55	FEB Return Lift Station	1	LSUM		
56	FEB Return Lift Station Flow Meter Stucture	1	LSUM		
57	Secondary FEB Including Concrete Lining & Sludge Disposal	1	LSUM		
58	Yard Piping	1	LSUM		
59	Backflow Preventer w/ Enclosure	1	LSUM		
60	Controls & Instrumentation including SCADA	1	LSUM		
61	Electrical	1	LSUM		
62	Electrical/Controls Buidling	1	LSUM		
63	Standby Power Generator w/ ATS (600 KW)	1	LSUM		
64	Site Grading & Drainage	1	LSUM		
65	Site Concrete Paving	1	LSUM		
66	Site Gravel Surface	1	LSUM		
67	Landscaping	1	LSUM		

BID FORM SECTION 5.01 - BID PROPOSAL - ATTACHMENT "A" SOUTHSIDE					
#	**Bid Item, Complete per Plans & Specifications**	**Unit**	**Quantity**	**Cost/Unit**	**Total Cost**
68	Demolition (Initial) including Sludge Disposal	1	LSUM		
69	Demolition (Final) NOT inlcuding Sludge Disposal	1	LSUM		
				SUBTOTAL - SOUTHSIDE	

BID FORM SECTION 5.01 - BID PROPOSAL - ATTACHMENT "A" CONVEYANCE					
#	**Bid Item, Complete per Plans & Specifications**	**Unit**	**Quantity**	**Cost/Unit**	**Total Cost**
70	Sewermain Restoration (See 01_29_00)	1	LSUM		
71	Site Preparation (See 01_29_00)	1	LSUM		
72	Special Survey for Easement Staking (See 01_29_00)	1	LSUM		
73	SUE Subsurface Utility Engineering (See 02_21_20)	1	LSUM		
74	24" DR11 HDPE Forcemain (Direct Bury)	1	LSUM		
75	24" DR11 HDPE Forcemain (Bore, No Encasement)	1	LSUM		
76	24" DR11 HDPE Forcemain (Bore, HDPE Encasement)	1	LSUM		
77	24" DR11 HDPE Forcemain (Bore, Steel Encasement)	1	LSUM		
78	Combination Air/Vac Valve in Vault (24")	1	LSUM		
79	Combination Air/Vac Valve in Vault (30")	1	LSUM		
80	30" DR11 HDPE Forcemain (Direct Bury)	1	LSUM		
81	30" DR11 HDPE Forcemain (Bore, No Encasement)	1	LSUM		
82	Connect 30" HDPE to Existing 24" DI Sewermain (24"x30" Wye)	1	LSUM		
				SUBTOTAL - CONVEYANCE	

SECTION 33_01_33

WASTEWATER LIQUID & SOLIDS REMOVAL & DISPOSAL

PART 1 GENERAL

1.1 SUMMARY

A. Removal and disposal of wastewater liquids and solids from the wastewater treatment facilities.

B. Waste sludge handling & disposal to be removed from the following locations:
   1. Southside Drying Beds prior to beginning initial demolition for Southside Improvements (to be included in bid item for "Demolition (Initial)")
   2. Northside Drying Beds prior to beginning initial demolition for Southside Improvements (to be included in bid item for "Demolition (Initial)")
   3. Southside Stormwater Pond prior to beginning stormwater pond improvements (to be paid from bid item "Waste Sludge Handling & Disposal from Existing Treatment Units Prior to Final Demolition (Northisde & Southside).")
   4. Northside existing treatment units prior to beginning final demolition (to be paid from bid item "Waste Sludge Handling & Disposal from Existing Treatment Units Prior to Final Demolition (Northisde & Southside).")
   5. Southside existing treatment units prior to beginning demolition (to be paid from bid item "Waste Sludge Handling & Disposal from Existing Treatment Units Prior to Final Demolition (Northisde & Southside).")

C. Quantity and character of sludge will vary from location to location and bid price should per for waste sludge handling should be an average price for overall quantity.

D. It is the contractor's responsibility to verify the total amounts in each basin prior to bid.

E. No adjustment in price or unit price will be made based on actual quantities.

1.2 RELATED SECTIONS

A. Section 01_00_01 Basic Requirements

B. Section 02_41_00 Demolition

C. The Contract Documents are a complete unit and complementary to each other. The individual Specification sections and other Contract Documents do not contain all cross references to "related work" or "related sections." It is the Contractor's responsibility to review the complete Contract Documents in order to properly scope, schedule and coordinate the work of any/all subcontractors, suppliers, and others on this project. Anything called out in one location of the Contract Documents is binding as if it were called out in all sections of the Contract Documents.

1.3 SUBMITTALS

A. Submittals for products and miscellaneous items in this specification section shall be submitted in accordance with Section 01_33_01 General Submittal Requirements and related submittal sections and provisions of the Contract Documents.

1.4 DEFINITIONS

A. Process Sludge: This material is the liquid volume of existing tankage and mixture of process water, mixed liquor, organic settled solids and sludge that will be transferred by the Contractor to another treatment basin as approved by the Owner. **The transfer of process sludge will be required prior to complete construction activities (demolition and rehabilitation of Southside stormwater pond.)**

B. Waste Sludge: This material includes an undetermined volume and mixture of grit, inorganic settled solids and sludge that will be removed and disposed by the Contractor. **The disposal of waste sludge will be required to complete construction activities (demolition and rehabilitation of Southside stormwater pond.)**

C. Sludge Management Plan (SMP): A plan for removing, processing, treating, storing, transporting, and disposing of mixed liquor, settled solids, partially digested sludge, and sludge in addition to soils intermixed with the various types of sludge.

D. Sludge Disposal / Disposition Plan (SDP): A plan for sludge removed from the treatment facility and disposed of in a landfill.

E. Added Water: This water is added by the Contractor to aide in the removal of, cleaning of, and transport of the existing solids to be removed from the wastewater facilities and disposed of off-site. The added water is the sole responsibility of the Contractor. The volume of added water is not included in the specified volumes of the bid quantities of material to be removed from the wastewater facilities. The Contractor is responsible for all effort and costs required to provide, use, transport, and dispose of added water used in the tasks associated with liquid and solids removal. The Contractor shall include all costs for added water in the base bid quantity prices and the Bid Form Unit Prices for Sludge Removal. The Contractor's use of added water shall not be grounds for a scope change nor a contract change.

F. Sludge Removal: Construction activities to remove mixed liquor, settled solids, partially digested sludge, and sludge from any wastewater treatment facility in an effort to gain access for subsequent construction activities and/or cleaning of a facility to facilitate inspection, repair, demolition, and/or other construction activities as required by the Contract Documents.

G. Treatment Basin: Structures, both existing and new, whose primary function is to hold, treat and/or process wastewater, wastewater solids, and sludge.

H. Project Locations: Facilities from which sludge is to be removed.

1.5 SCHEDULING & SEQUENCING

A. Conduct sludge removal only after schedule has been approved by the Owner and the Contractor has submitted SMP or SDP and received written approval of same from ODEQ Contractor, with Owner's approval, may make use of existing SMP/SDP in place. Coordinate with Owner prior to bid. Sludge removal schedule and sequencing must allow for continued operation of the facilities. If land application is used for disposal, apply sludge only after adequate erosion and sediment controls are in place.

1.6 MEASUREMENT & PAYMENT

A. Process Sludge Handling:
   1. Measurement: Will not be measured. It is considered to the be the full volume of any tankage that is required to be drained to execute construction activities (demolition and rehabilitation of Southside stormwater pond.)
   2. Payment is subsidiary to Demolition. Payment shall be full compensation for the following: equipment, labor, any added water, gas/fuel, sludge and soil testing, spill clean-up, and temporary pumping and piping. Contractor is responsible for all efforts and costs associated with procuring, transport, and final disposal of any added water.

B. Waste Sludge Handling and Disposal for Initial Demolition:
   1. Will not be measured for payment and shall be included in the price bid for demolition.

C. Waste Sludge Handling and Disposal for Final Demolition:
   1. Measurement: The units scheduled for demolition or rehabilitation will be drained of Process Sludge to the minimum level practical. Prior to removal of any Waste Sludge, the Owner, Engineer, and Contractor will agree on that the remaining sludge is of a nature that cannot be processed by the treatment plant. Upon agreement the sludge depth will be measured at each corner and at least one point in the center of the basin. The depth measurements along with the basin plan view area will used to calculate cubic yards of Waste Sludge to be disposed of. No payment will be made for Added Water.
   2. Payment: Payment for sludge disposal will be by the cubic yard of sludge disposed at the Bid Price listed in the Bid Proposal. The Bid Item will be full compensation for removal of waste sludge, dewatering, hauling, landfill tipping fees, permitting, tools, labor and any other incidentals required to complete the work.

PART 2 PRODUCTS (NOT USED)

PART 3 EXECUTION

3.1 GENERAL

A. The Contractor with coordination from the Owner will be responsible for transferring Process Sludge from one basin to another.

B. Contractor is responsible for removal, handling and disposal of all Waste Sludge, including the material resulting from the tanks' cleaning.

C. Remove Waste Sludge from the existing basins within the limits shown or specified and dispose of the Waste Sludge in accordance with a ODEQ approved SMP or SDP. The Contractor shall also be responsible for removing and handling any waste sludge from the new basins in accordance with an ODEQ approved SMP or SDP as required for his construction activities within these new basins.

D. Contractor is responsible for all expenses related to Process Sludge removal and transfer, which shall be covered under the base bid.

E. Contractor is responsible for maintaining and protecting all roads, drives, dikes, equipment, structures, etc during sludge removal, processing, land application, hauling, and disposal and shall repair any damaged as a result of their work.

F. The Contractor will be required to keep a Daily Record and a Project Record, of the volume of liquid biosolids land-applied each day. The Daily Record will need to be provided to the Project Manager, or his designee, at the end of each workday. The Project Record will need to be provided to the Owner, or designee, at the end of the project.

G. The Contractor will communicate daily with the Engineer to determine which land application site will be used. This discussion is also designed to ensure that the Contractor does not over apply biosolids to any approved application site.

H. The Contractor will be responsible for biosolids sampling, sample preservation, sample delivery, and storage in accordance with methods developed by the City of Shawnee Wastewater Treatment Plant Laboratory Staff or standard practice is no methods have been developed.

I. The Contractor is required to maintain a cooperative and courteous relationship with the landowner while delivering and land-applying sludge, grit, and biosolids. Care shall be taken to leave the fields and roadway in reasonable condition upon project completion.

3.2 PROJECT LOCATION

A. As follows, but not to extend beyond Project limits.
   1. Northside
      a. All existing units
      b. All piping that requires wastewater and sludge removal
      c. All other treatment plant facilities that require dewatering and cleaning to perform the work.
   2. Southside
      a. All existing units
      b. Existing stormwater pond
      c. All piping that requires wastewater and sludge removal
      d. All other treatment plant facilities that require dewatering and cleaning to perform the work.

3.3 TREATMENT BASIN CLEANING

A. Transfer Process Sludge to another basin designated by the Owner and take measurements of Waste Sludge In-Situ prior to commencing cleaning activities.

B. Remove sludge from the Treatment Basins within limits or as specified or directed.

3.4 EQUIPMENT

A. Provide necessary equipment for Process Sludge transfer from on basin to another Owner designated basin.

B. Provide necessary equipment for Waste Sludge removal, transport from the facility to the disposallocation, and final application or disposal.

C. Provide necessary equipment for added water, procurement, transport from the facility to thedisposal location, and final application or disposal.

3.5 DISPOSAL PERMITTING

A. Contractor will be responsible for registration, authorization, and/or permitting of the land application with the appropriate regulatory agencies and shall pay the related regulatory fees.

B. Contractor will maintain all chain of custody forms and provide documentation of all sludgevolumes land applied and the application sites.

3.6 TESTING

A. Contractor will be responsible for obtaining all sludge and soil samples and their required labanalyses for permitting.

B. Contractor will pay for the lab analysis and will include such lab analysis expenses with as part ofthe Work.

3.7 DISPOSAL

A. Apply the sludge and/or added water for beneficial use as fertilizer/soil amendment or dispose ofthe material using a disposal method approved by the appropriate permitting agency.

B. When sludge application is via the subsoil injection method, such application shall be accordingto sound agronomic rates.

C. Contractor is responsible for determining application rates based on cover crops and analyticaltesting of the sludge.

D. Contractor may remove and separately dispose of oil/grease from the sludge prior to land application.

E. Contractor is responsible for providing commercially reasonable handling of sludge once it hasbeen collected, including cleanup of any spills.

F. Contractor is responsible for meeting the dewatering requirements of landfill disposal.

3.8 RECORD KEEPING

A. Maintain records of sludge application and submit records to Engineer, Owner, and regulatingagencies, as required by this specification and any related permits.

3.9 BIDDING QUANTITIES

A. Process Sludge Removal
   1. Will not be measured for payment and will be included in the price bid for demolition.

B. Waste Sludge (initial demolition)
   1. Will not be measure for payment and will be included in the price bid for demolition.

C. Waste Sludge Removal (final demolition)
   1. Contractor is responsible to remove and dispose of the waste sludge volumes listed in the bid proposal from the designated structures to be demolished.
   2. The volume listed is for reference only, payment will be based on the total quantity of Waste Sludge removed from all facilities. No additional payment will be made if quantities removed exceed the estimated quantity listed for any individual facility unless the total quantity is exceeded (both facilities.) If the total quantity removed meets the total estimated, sludge removal will stop until the Owner and Contractor agree to contract modification to handle the remaining Waste Sludge.

END OF SECTION

THIS PAGE INTENTIONALLY LEFT BLANK FOR DOUBLE SIDED PRINTING

SECTION 43_23_31.35

NON-POTABLE WATER PUMPS

PART 1 GENERAL

1.1 SUMMARY

A. This specification covers the work necessary to furnish and install non-potable water pumps as specified herein and as shown on the plans
   1. Northside WWTP
      a. Three (3) (one as shelf spare)
      b. 200 gpm @ 207'
   2. Spare Parts
      a. One (1) shelf spare pump

B. Pumps and all associated components as listed above shall be of the same Manufacturer to obtain standardization of performance, operation, spare parts, maintenance and Manufacturer's services.

C. Supplier / manufacturer to review and match requirements of Belt Filter Press. Those requirements supersede any conflicting information provided herein (including pump sizing.)

D. All listed iron and steel products used in this project must be produced in the United States. The term "iron and steel products" means the following products made primarily of iron or steel: lined or unlined pipes and fittings, manhole covers and other municipal castings, hydrants, tanks, flanges, pipe clamps and restraints, valves, structural steel, reinforced precast concrete, and construction materials. The deminimis and minor components waiver apply to this contract for minor components.

1.2 RELATED SECTIONS

A. Section 01_00_01 Basic Requirements

B. Section 01_33_01 General Submittal Requirements

C. Section 01_33_02 Pre-bid Equipment Submittal Requirements

D. The Contract Documents are a complete unit and complementary to each other. The individual Specification sections and other Contract Documents do not contain all cross references to "related work" or "related sections." It is the Contractor's responsibility to review the complete Contract Documents in order to properly scope, schedule and coordinate the work of any/all subcontractors, suppliers, and others on this project. Anything called out in one location of the Contract Documents is binding as if it were called out in all sections of the Contract Documents.

1.3 SUBMITTALS

A. Submittals for products and miscellaneous items in this specification section shall be submitted in accordance with Section 01_33_01 General Submittal Requirements and related submittal sections and provisions of the Contract Documents.

1.4 REFERENCES

A. The Contractor and/or Manufacturer shall follow the standards listed below, except as otherwise specified herein. The latest revision or edition in effect at the time of bid opening shall be utilized.

1.5 DELIVERY, STORAGE & HANDLING

A. Equipment shall be delivered to the jobsite completely factory assembled. Individual equipment components shall be crated in structurally adequate packing containers to prevent damage during shipping, facilitate ease of handling and to provide suitable protection from weather for extended storage at the jobsite prior to installation. Packing containers shall be permanently labeled with appropriate equipment identification, shipping address and return address and packing list shall be provided with equipment at time of delivery.

B. Any electrical motors and components shall be kept thoroughly dry at all times and shall be stored indoors. Equipment storage shall be protected and maintained in accordance with the manufacturer's recommendations. Equipment shall not be stored directly on the ground.

C. Contractor shall utilize equipment and tools of adequate size suitable for unloading, transporting, storing and supporting the equipment during installation and in accordance with manufacturers recommendation. Caution shall be employed to prevent equipment damage resulting from abrupt contact with other materials or equipment.

1.6 WARRANTY

A. The manufacturer shall warrant the equipment to be of quality construction, free from defects in materials and workmanship. The warranty shall become effective upon acceptance of the project by the Owner (after completion of final inspection.)

B. The equipment, apparatus, and parts furnished shall be warranted from a period of one (1) year, excepting only those items that are normally consumed in service, such as oil, grease, gaskets, o-rings, etc. The manufacturer shall be solely responsible for the warranty of the equipment and all components.

C. Upon request from the Engineer and/or the Owner, the manufacturer shall demonstrate proof of financial responsibility with respect to performance and delivery date. In addition, the manufacturer shall provide proof of evidence of facilities, equipment, and skills required to produce the equipment specified herein and provide technical service and replacement parts.

D. Components failing to perform as specified by the Engineer, or as represented by the manufacturer, or proven defective in service during the warranty period, shall be replaced, repaired, or satisfactorily modified by the manufacturer without cost of kind to the Owner.

E. It is not intended the manufacturer assume liability for consequential damages or contingent liabilities arising out of failure of any product or parts thereof to operate properly, however caused by or resulting from or arising out of defects in design or manufacture, delays in delivery, replacement, or otherwise.

PART 2 PRODUCTS

2.1 DESCRIPTION

A. Quantity to be Furnished:
1. Non-Potable Supply Pumps - Three (3) (one as shelf spare)

B. Dimensional and Design Information
1. Non-Potable Water Supply Pump

a.	Liquid Pumped	- Final Effluent
b.	Design Flow Rate - gallons / minute	- 200
c.	Total Head Required - ft.(design)	- 207’
d.	Motor - Horsepower (maximum)	- TBD based on flow/head
e.	Motor Service Factor	- 1.15
f.	Motor Enclosure Type	- WP1
g.	Motor Starting Method	- VFD
h.	Motor Ambient Operating Temperature	- 40 C
i.	Electrical Power Volt/Phase/Hz	- 460/3/60
j.	Pump Speed - RPM (maximum)	- 3500
k.	Discharge Size - inches (minimum)	- 6
l.	Discharge Type - ANSI Flange	- Flanged
m.	Casing Working Pressure-PSI(minimum)	- 125

C. Factory Painting
1. Pump, coupling guard and support base shall be prime painted with system compatible with finish coating system specified in Coating Section of these specifications. The motor shall be finished painted with the Manufacturer's standard enamel finish coating and furnished with adequate touch-up paint to repair field damages.

2.2 MATERIALS

A. Non-Potable Water Supply
1. Non-Potable Water Supply
2. Suction Manifold or Bell - A48 Class 30 Cast Iron
3. Bowl - A48 Class 30 Cast Iron
4. Impeller - B584 C83600 Bronze
5. Bowl Wear Ring - B505 C93200 Bronze
6. Bowl Bearings - B505 C93200 Bronze
7. Bowl Sand Collar - B505 C93200 Bronze
8. Impeller Wear Ring - B505 C93200 Bronze

9. Bowl Flange Cap Screw or Stud and Nuts- 303 stainless steel
10. Pump Shaft - A582 - 416 stainless steel
11. Column Pipe - ASTM A 53, grade A, schedule 40 steel pipe
12. Column Line Shafting - AISI 1045 steel
13. Column Coupling - A53 Grade b Steel
14. Column Top Flange Cap Screws - 303 stainless steel
15. Top Bowl Bearing - B505 C93200 Bronze
16. Intermediate Bowl Bearing - B505 C93200 Bronze
17. Suction Bearing - B505 C93200 Bronze
18. Connector Bearing - B505 C93200 Bronze
19. Column Shaft Bearing Retainer Ring - 303 stainless steel
20. Discharge Head – Carbon Steel
21. Packing Container - Class 30 Cast Iron
22. Packing Washer - Brass
23. Packing - Graphited Rope
24. Packing Gland - Cadmium plated Class 30 cast iron
25. Packing Gland T-Bolt - 316 Stainless Steel
26. Packing Gland Clamp - 302 Stainless Steel
27. Packing Gland Nut - 316 Stainless Steel
28. Packing Gland Gasket - Vellumoid
29. Packing Gland Cap Screw - Steel
30. Top Shaft – AISI 1045 Steel
31. Top Shaft Seal Ring - Neoprene
32. Top Shaft Coupling - 410 Stainless Steel
33. Sole Plate - Carbon Steel or CI
34. Sole Plate Gasket - Vellumoid
35. Sole Plate Cap Screws - Carbon Steel

2.3 COMPONENTS

A. Non-Potable Water Supply Pumps

1. The pump bowl assembly shall be of close grained cast iron having a minimum tensile strength of 30,000 pounds per square inch, free from blow holes, sand holes, and all other faults; accurately machined and fitted to close dimensions.
2. The impeller shaft shall be of stainless steel and shall be supported by bronze or neoprene bearings located on both sides of each impeller. The impeller shall be of the enclosed type and shall be of bronze, of heavy construction, accurately fitted and balanced. The impeller shall be locked securely to the impeller shaft with a tapered lock bushing. The bowls and impellers shall be designed with smooth passage to assure efficient operation. The impellers shall be adjustable by means of a top shaft adjusting nut.
3. The pump column pipe shall be furnished in interchangeable sections not over 5 feet in length, and shall be threaded.
4. The line shafting shall be of ample size to operate the pumps without distortion or vibration. The shafts shall be furnished in interchangeable sections not over 5 feet in length, and shall be coupled with extra-long threaded steel couplings machined from solid bar steel. The shaft shall be fitted with stainless steel replaceable sleeves. The column assembly shall have bronze guides fitted into the coupling and secured in place with butted pipe ends. Each guide shall contain a water lubricated rubber bearing designed for vertical turbine pump service.

5. The discharge head shall be the above ground discharge type with machined mounting surface designed for standard NEMA 1 flange motor, the discharge flange shall be furnished with 125-pound ANSI drilling the discharge head shall be fitted with a packing container designed for lubrication with the pumped liquid. A threaded connection shall be provided to allow the lubrication liquid collected in the interior ring of the discharge head to be piped to a local drain. A seal ring shall provided to prevent the lubrication liquid from leakage up onto the motor bearings. Hand hole openings large enough to provide easy access to all adjustable components shall be furnished. Lifting lugs adequately designed to support the entire weight of the pump assembly shall be integrally cast into the discharge head.
6. Sole plate with gasket and cap screws shall be furnished to provide a water tight seal between concrete base and pump and to allow for removal of pump from base without permanently damaging the water tight seal.
7. Drive Motor - The motor shall be the squirrel-cage induction alternating current inverter duty type. The motor nameplate horsepower rating shall not be exceeded at any head capacity point on the pump curve. The motor shall conform to the following:

a.	Synchronous Speed	3600 RPM or as approved
b.	Slip	3 percent maximum at full load
c.	Voltage, phase, & Frequency	460 volts, 3 phase, 60 Hz
d.	Mounting	Vertical, hollow shaft
e.	Enclosure	Weather protected, Type I
f.	Service Factor	1.15
g.	Duty Cycle	Continuous
h.	Ambient Temperature Rating	40 degrees C
i.	Starting Method	VFD
j.	Bearing Lubrication	Manufacturer's standard
k.	Bearing Bio Life	B10 Life-Ave. 25 Years, min 5 Yrs.

PART 3 EXECUTION

3.1 INSTALLATION

A. The general contractor shall assume full responsibility for coordination of the entire project, including verification that all structures, piping, coating systems and equipment components are compatible. The general contractor shall initially operate each equipment system, and shall make all necessary adjustments so that each system is placed in proper operating condition.

B. Equipment and materials utilized for this project must be approved by the Engineer prior to installation. Approval for installation or incorporation in this project will be made only after submittal of manufacturer's shop and installation drawings, test results or other data as required and as specified herein.

C. Installation of equipment shall be in full conformance with the manufacturer shop drawings and requirements as approved by the Engineer. Wherever a conflict arises between manufacturer's instructions and the contract documents, the contractor shall follow the Engineer's decision at no additional cost to the owner.

3.2 WORKMANSHIP

A. Handle carefully and protect the pump and appurtenances to avoid damage. If the pump and column are laid down, support them with blocks to prevent damage.

B. Mount pump and driver on suction barrel as shown on the Drawings. The size of the suction barrel shall be in accordance with pump manufacturer's recommendations.

C. Adjust pump assembly such that the driving unit is properly aligned, plumb, and level with the driven unit and the interconnecting shaft and coupling. Flexible coupling shall not be considered to compensate for misalignment. Install all equipment in accordance with manufactures instructions.

D. Any evidence of pump or driver misalignment, noisy operation, or other signs of improper setting shall be corrected by the Contractor. Care during storage, installation and lubrication shall be in strict accordance with the manufacturer's recommendations.

3.3 ANCHORAGE

A. Anchor bolts shall be furnished for each item of equipment. Anchor bolts, together with templates or setting drawings, shall be delivered sufficiently early to permit setting the anchor bolts when the structural concrete is placed. Two nuts shall be furnished for each bolt. Anchor bolts shall be in place prior to concrete pour.

B. Types of anchorage:
   1. All cast-in-place anchorage shall be 304 stainless steel.
   2. Drill-in anchorage shall be epoxy adhesive type and shall be used only if recommended and allowed by manufacturer.

3.4 LUBRICATION

A. Equipment shall be adequately lubricated by a system which does not require more than once-a-week operator attention, does not require attention during start-up or shutdown and does not waste lubricants.

B. The contractor shall provide lubricants of the type recommended by the equipment manufacturer in sufficient quantity to fill all lubricant reservoirs and to replace all consumption during equipment initial operation, performance testing and operation prior to acceptance of equipment by the owner.

3.5 FIELD PAINTING

A. Painting shall be in accordance with the high performance coating section of these specifications. All ferrous materials which are not non-corrosive shall be painted with epoxy paint systems. Items to be painted which will be exposed to submerged or wet conditions shall be painted with the coal-tar epoxy paint system. Paint systems in contact with water to be used for potable public water supply systems shall be approved by the FDA for this application.

B. Minor defects in the hot-dipped galvanized coating caused by shipping, handling or installation shall be repaired after equipment installation. The defects shall be thoroughly

cleaned and wire-brushed to remove all foreign substances, wiped clean with a damp rag, thoroughly dried, and coated with at least 6 mils of zinc-rich compound.

3.6 MANUFACTURER'S SERVICES

A. The Contractor shall require the manufacturer to furnish the services of a qualified field engineer to perform the following functions in the designated periods of time. These services are to be performed at the jobsite.
   1. Check-out of installation, start-up of equipment and initial operator instruction. This service shall take place after all mechanical equipment associated with the control system is installed and mechanically operable.
   2. After equipment is fully operational, and before Owner will assume responsibility for the operation of the equipment, the equipment manufacturer's operation specialists shall instruct the Owner's operating personnel in the care, maintenance and proper operation of the equipment.

B. Field Test
   1. Prior to plant startup, all equipment described herein shall be inspected for proper alignment, quiet operation, proper connections, and satisfactory performance by means of a functional test.
   2. The pump and motor assembly shall be field tested to verify vibration is not in excess of the limits stated in the latest revision of Hydraulic Institute and NEMA MG 1.
   3. The pumps, motors, and controls shall be given an operational test in accordance with the standards of the Hydraulic Institute. Recordings of the test shall substantiate the correct performance of the equipment at the design head, capacity, suction lift, speed and horsepower as herein specified.
   4. Units failing to meet the Specifications and to the satisfaction of the Owner must be more accurately tested in accordance with Hydraulic Institute Standards. If the pump fails the second test, the unit will be rejected, and the Contractor shall remove the unit that is rejected, and the Contractor shall furnish a unit that will perform as specified.

C. Instructions for installation of the pump and related appurtenances shall be written and furnished by the manufacturer. Contractor shall follow these instructions in installing the equipment.

D. Operation and maintenance materials
   1. The pump manufacturer shall be responsible for supplying written instruction, which shall be sufficiently comprehensive to enable the operator to operate and maintain the pump and all equipment supplied by the manufacturer. Instructions shall assume that the operator is familiar with pumps, motors, piping, valves, and controls, but that he has not previously operated and/or maintained the exact equipment supplied.
   2. The instruction shall be prepared as a system manual applicable solely to the pump and equipment supplied by the manufacturer to these specifications, and shall include those devices and equipment supplied by him.
   3. Operation and maintenance instruction shall be specific to the equipment supplied in accordance with these specifications. Instruction manuals applicable to many different configurations and pump stations, and which require the operator to selectively read portions of the instructions shall not be acceptable.

E. All costs for the above manufacturer functions including travel, lodging, meals, and incidental shall be considered to have been included in the Contractor's lump sum bid price.

END OF SECTION

THIS PAGE INTENTIONALLY LEFT BLANK FOR DOUBLE SIDED PRINTING

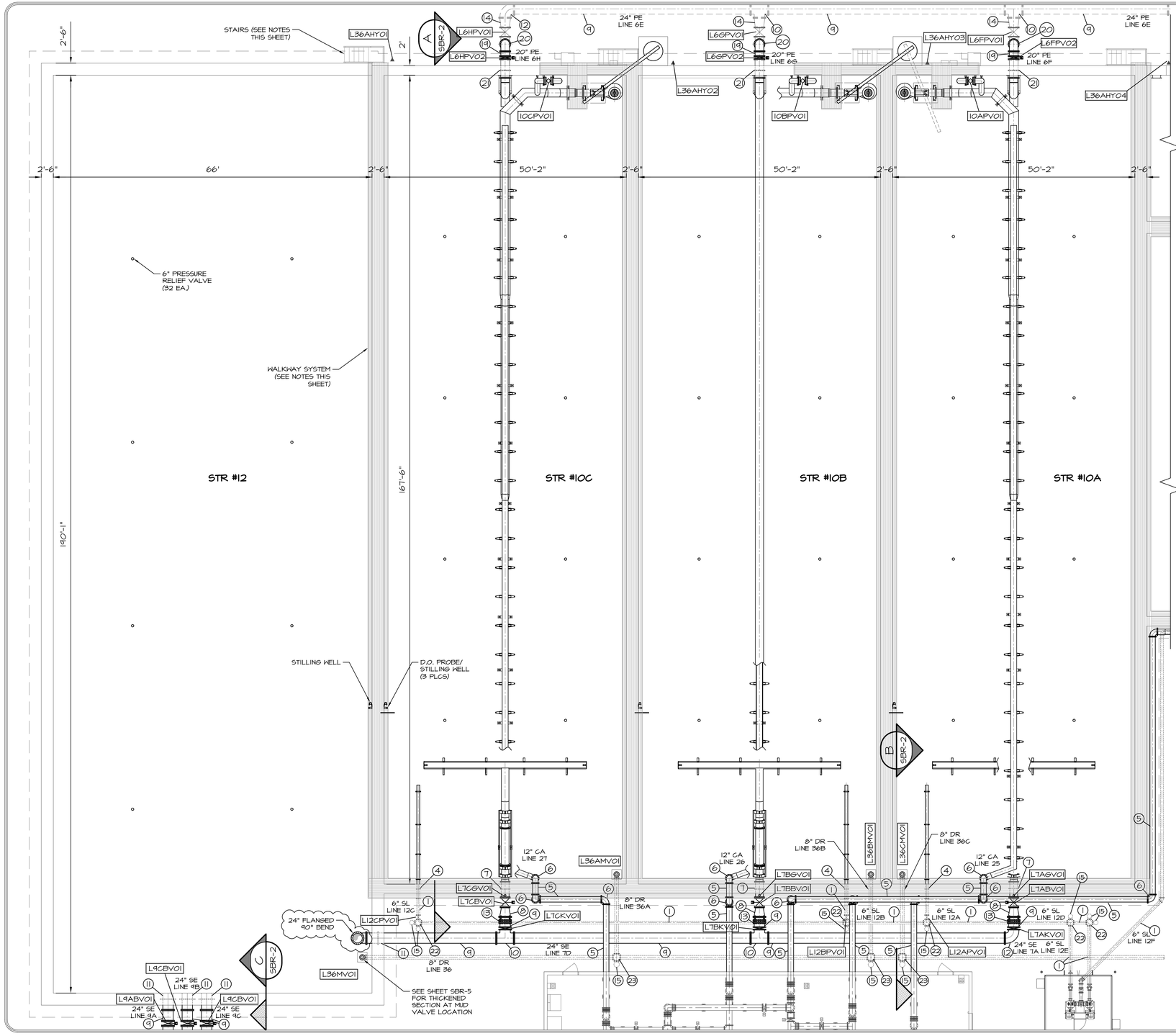

HANDRAIL/WALKWAY NOTES:

1. COMPLETE HANDRAIL SYSTEM (INCLUDING STAIRS AND PUMP MAINTENANCE PLATFORM) TO BE FURNISHED AS A SYSTEM (INCLUDING PRE-EQ BASIN) FROM A SINGLE SUPPLIER. COMPLETE SYSTEM TO BE STAMPED BY AND OKLAHOMA STRUCTURAL ENGINEER (S.E.).
2. COORDINATE WITH PUMP SUPPLIER TO VERIFY CLEARANCE REQUIRED FOR MOTIVE PUMP REMOVAL.
3. STAIRS TO BE AS CLOSE AS PRACTICAL TO SBR WALL.

VALVE SCHEDULE - STRUCTURE #10A-10C & #12

VALVE I.D.	VALVE TYPE	VALVE SIZE	MOTORIZED
L6FPV01	PLUG	20"	NO
L6FPV02	PLUG	20"	YES
L7ABV01	BUTTERFLY	18"	YES
L7AKV01	KNIFE	24"	NO
L6GPV01	PLUG	20"	NO
L6GPV02	PLUG	20"	YES
L7BBV01	BUTTERFLY	18"	YES
L7BKV01	KNIFE	24"	NO
L6HPV01	PLUG	20"	NO
L6HPV01	PLUG	20"	YES
L7CBV01	BUTTERFLY	18"	YES
L7CKV01	KNIFE	24"	NO
10APV01	PLUG	12"	NO
10BPV01	PLUG	12"	NO
10CPV01	PLUG	12"	NO
L12APV01	PLUG	6"	YES
L12BPV01	PLUG	6"	YES
L12CPV01	PLUG	6"	YES
L9ABV01	BUTTERFLY	24"	YES
L9BBV01	BUTTERFLY	24"	YES
L9CBV01	BUTTERFLY	24"	YES
L36AMV01	MUD	8"	NO
L36BMV01	MUD	8"	NO
L36CMV01	MUD	8"	NO
L7AGV01	GLOBE	¾"	NO
L7BGV01	GLOBE	¾"	NO
L7CGV01	GLOBE	¾"	NO

NOTES:

1. MUD VALVES SHALL BE FURNISHED WITH STEM, WALL ANCHORS, AND HANDWHEEL OPERATOR IN A COMPLETE SYSTEM FOR WALL MOUNTING WITH WHEEL OPERATOR AT WALKWAY LEVEL. SUBMITTAL REQUIRED.
2. ALL MOTORIZED VALVES TO BE SUPPLIED WITH HANDWHEEL OPERATORS.
3. L10APV01, L10BPV01, AND L10CPV01 TO BE FURNISHED WITH STEMS AND STEM SUPPORTS TO EXTEND TO THE TOP OF THE BASIN WALL PER THE MANUFACTURERS RECOMMENDATIONS.
4. GLOBE VALVES TO BE USED TO FILL SBR DECANTER TO RELEASE AIR.
5. AIR PIPING TO BE SUPPORTED TO PREVENT SLIPPAGE AND TO BE LOOSELY ATTACHED TO ALLOW PIPE MOVEMENT.
6. AIR PIPING SHALL BE GROOVED DUCTILE IRON. COMPLETE SYSTEM TO BE DESIGNED AND FURNISHED BY VICTAULIC.

PIPING SCHEDULE STRUCTURE #10A-10C & #12

NO.	ITEM	DESCRIPTION/NOTES
1	6" D.I. SPOOL	
2	6" D.I. 90° BEND, FLxFL	
3	6" D.I. TEE, FLxFL	
4	6" D.I. WALL PIPE, FLxPE	WITH THRUST COLLAR
5	12" D.I. SPOOL, GRxGR	NOTE 6 (SBR-3)
6	12" D.I. 90° BEND, GRxGR	NOTE 6 (SBR-3)
7	18" D.I. WALL PIPE, FLxFL	WITH THRUST COLLAR
8	18"x24" D.I. ECCENTRIC REDUCER, FLxFL	ECCENTRIC
9	24" D.I. SPOOL	
10	24" D.I. TEE, MJ	
11	24" D.I. WALL PIPE, FLxPE	WITH THRUST COLLAR
12	24" D.I. 90° BEND, MJxMJ	
13	24" D.I. DISMANTLING JOINT, MJxMJ	
14	24"x20" D.I. ECCENTRIC REDUCER, MJxMJ	ECCENTRIC
15	CLEANOUT	SEE DETAIL SHEETS
16	12" EXPANSION JOINT	BY VICTAULIC
17	ADJUSTABLE PIPE SUPPORT/STAND	SPACE AS NEEDED
18	WALL MOUNTED PIPE SUPPORT	
19	20" D.I. SPOOL, FLxFL/FLxMJ	MJ UNDERGROUND
20	20" D.I. 90° BEND, MJxMJ	
21	20" D.I. WALL PIPE, FLxPE	WITH THRUST COLLAR
22	6" D.I. CROSS, MJxMJ	
23	8" D.I. CROSS, MJxMJ	
24	CONCRETE PIPE SUPPORT	

NOTES:
1. PROVIDE PIPE SUPPORTS AS NECESSARY. NOT SHOWN FOR CLARITY.

REGISTERED PROFESSIONAL ENGINEER
5/12/22
BRANDON WALL
21108
OKLAHOMA

WALL ENGINEERING
223 N. WASHINGTON AVE., DURANT, OK 74701
OKLAHOMA CA #5413 EXP. JUNE 30, 2023

SUBMITTAL / REVISIONS:

DATE	BY	SUBMITTAL / REVISION
03/22	JR	ODEQ SUBMITTAL
04/22	JR	ISSUED FOR BIDDING
07/21	JR	REVISED PER ADDENDUM NO. 2

SHAWNEE MUNICIPAL AUTHORITY
WASTEWATER SYSTEM IMPROVEMENTS
CONTRACT DOCUMENTS VOL. 4 OF 6 - NORTHSIDE WWTP

SEQUENCING BATCH REACTOR
PLAN VIEW AND SCHEDULES

PROJECT NO.
SHN-20-01
DATE
06/22
DRAWN BY:
JR
CHECKED BY:
BW
REVIEWED BY:
DBW
SCALE:
3/32"=1'-0"

BAR IS ONE INCH ON ORIGINAL DRAWING
0" 1"
IF NOT ONE INCH ON THIS SHEET, ADJUST SCALES ACCORDINGLY

SHEET
SBR-1

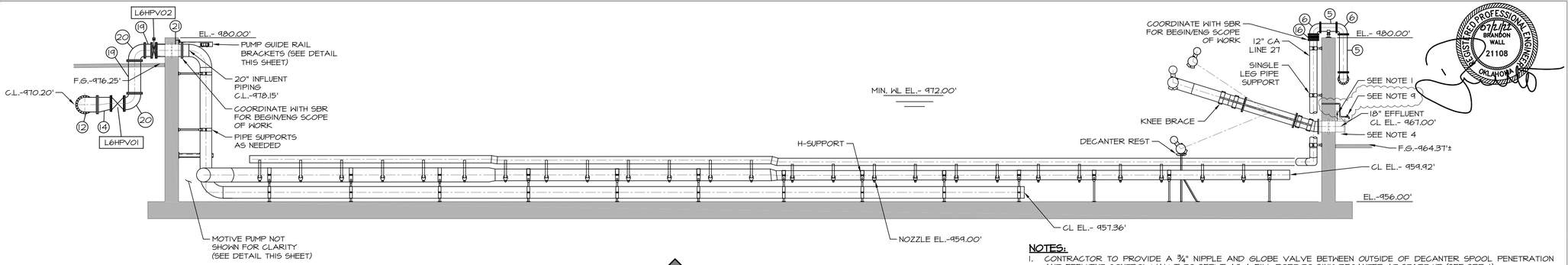

A SBR-1 **SECTION**
SCALE: 1/8"=1'-0"

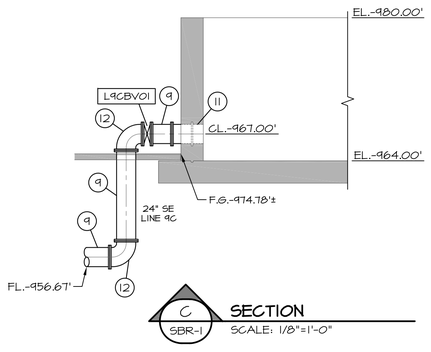

C SBR-1 **SECTION**
SCALE: 1/8"=1'-0"

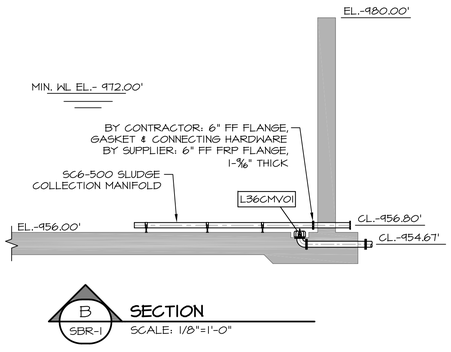

B SBR-1 **SECTION**
SCALE: 1/8"=1'-0"

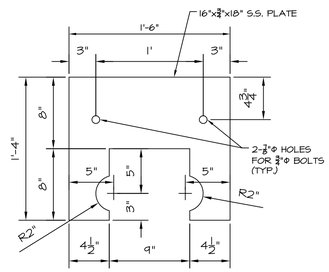

PIPE GUIDE PLATE
SCALE: 1-1/2""=1'-0"

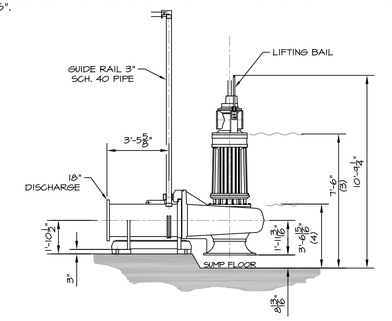

MOTIVE PUMP DETAIL
SCALE: 1/4"=1'-0"

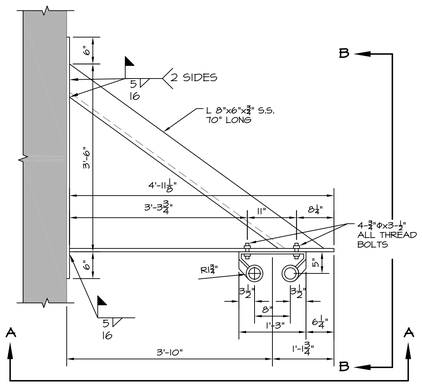

TOP PUMP GUIDE RAIL BRACKET
SCALE: 3/4"=1'-0"

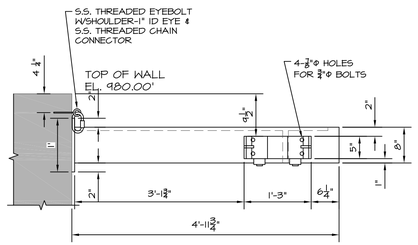

SECTION A-A
SCALE: 3/4"=1'-0"

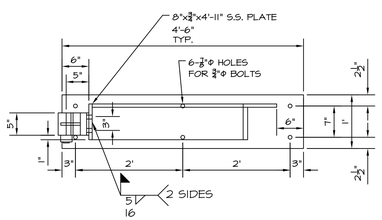

SECTION B-B
SCALE: 3/4"=1'-0"

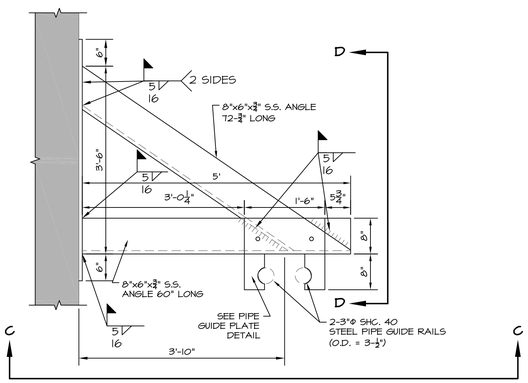

PUMP GUIDE RAIL BRACKET
SCALE: 3/4"=1'-0"

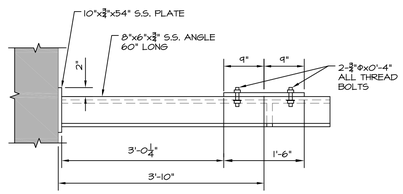

SECTION C-C
SCALE: 3/4"=1'-0"

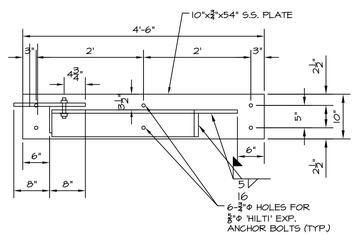

SECTION D-D
SCALE: 3/4"=1'-0"

WALL ENGINEERING
223 N. WASHINGTON AVE., DURANT, OK 74701
OKLAHOMA CA #5413 EXP. JUNE 30, 2023

REGISTERED PROFESSIONAL ENGINEER
7/1/22
BRANDON WALL
21108
OKLAHOMA

SUBMITTAL / REVISIONS:

DATE	BY	SUBMITTAL / REVISION
03/22	JR	ODEQ SUBMITTAL
05/22	JR	REVISED PER ODEQ COMMENT
06/22	JR	ISSUED FOR BIDDING
07/22	JR	REVISED PER ADDENDUM NO. 1
07/22	JR	REVISED PER ADDENDUM NO. 2

SHAWNEE MUNICIPAL AUTHORITY
WASTEWATER SYSTEM IMPROVEMENTS - NORTHSIDE WWTP
CONTRACT DOCUMENTS VOL. 4 OF 6

SEQUENCING BATCH REACTOR
SECTION VIEWS AND DETAILS

PROJECT NO.
SHN-20-01
DATE
06/22
DRAWN BY:
JR
CHECKED BY:
BW
REVIEWED BY:
DBW
SCALE:
1/16"=1'-0"

BAR IS ONE INCH ON ORIGINAL DRAWING
0" 1"
IF NOT ONE INCH ON THIS SHEET, ADJUST SCALES ACCORDINGLY

SHEET
SBR-2

NOTES:
1. CONTRACTOR TO PROVIDE A ¾" NIPPLE AND GLOBE VALVE BETWEEN OUTSIDE OF DECANTER SPOOL PENETRATION AND EFFLUENT CONTROL VALVE TO SERVE AS A FILL PORT TO SINK DECANTER AT START-UP (SEE SBR-1).
2. DECANTER OUTLET PIPING MUST BE DESIGNED WITH A SUBMERGED OUTLET OR TRAPS TO PREVENT AIR FROM ENTERING THE DECANTER.
3. ALL PIPE ELEVATIONS SHOWN ARE CENTER OF PIPE UNLESS OTHERWISE INDICATED.
4. ALL FRP PIPE AND FITTINGS SHALL BE 75 PSI MIN. PRESSURE RATING.
5. ALL FLANGES FURNISHED BY SUPPLIER SHALL MEET OUTSIDE DIAMETER, BOLT CIRCLE DIAMETER, NUMBER AND SIZE OF HOLES PER ANSI B.16.1 125 LB. CAST IRON, AND ANSI B16.5 150 LB. STEEL FLANGE SPECIFICATIONS.
6. GASKETS PROVIDED BY SUPPLIER SHALL BE 3/16" THICK, FULL FACE BUNA-N RUBBER, WITH A DUROMETER HARDNESS OF 40-50.
7. COORDINATE DECANTER REST ELEVATION W/SUPPLIER.
8. COORDINATE SBR INTERNAL COMPONENTS WITH SUPPLIER TO ESTABLISH SCOPE OF SUPPLY AND VENDER/CONTRACTOR RESPONSIBILITIES.
9. INSTALL 1-1/2" SAMPLE WITH VALVE (ONE FOR EACH SBR BASIN) AND FREEZE PROTECT. SAMPLE LINE TO BE INSTALLED AT ELEV. 971.00' AND ROUTE TO 36".

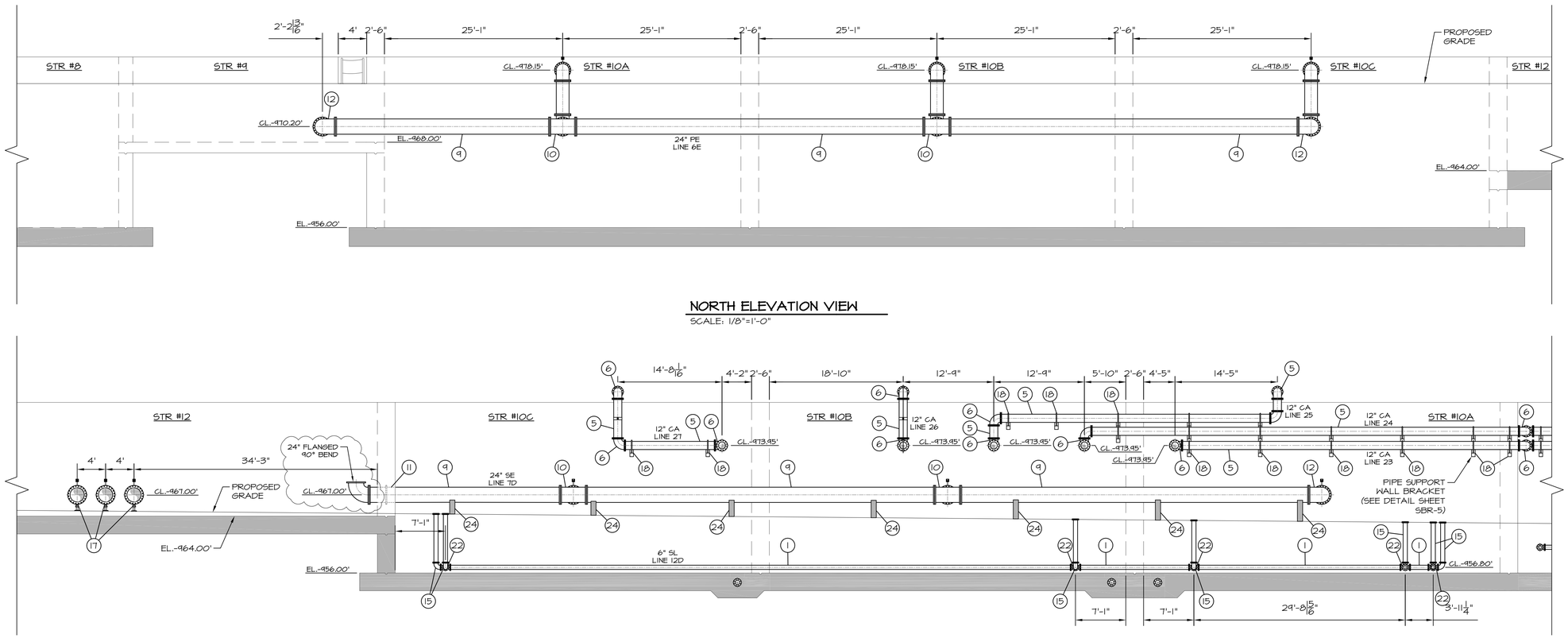

NORTH ELEVATION VIEW

SCALE: 1/8"=1'-0"

SOUTH ELEVATION VIEW

SCALE: 1/8"=1'-0"

PIPING SCHEDULE STRUCTURE #10A-10C & #12		
NO.	ITEM	DESCRIPTION/NOTES
(1)	6" D.I. SPOOL	
(2)	6" D.I. 90° BEND, FLxFL	
(3)	6" D.I. TEE, FLxFL	
(4)	6" D.I. WALL PIPE, FLxPE	WITH THRUST COLLAR
(5)	12" D.I. SPOOL, GRxGR	NOTE 6 (SBR-3)
(6)	12" D.I. 90° BEND, GRxGR	NOTE 6 (SBR-3)
(7)	18" D.I. WALL PIPE, FLxFL	WITH THRUST COLLAR
(8)	18"x24" D.I. ECCENTRIC REDUCER, FLxFL	ECCENTRIC
(9)	24" D.I. SPOOL	
(10)	24" D.I. TEE, MJ	
(11)	24" D.I. WALL PIPE, FLxPE	WITH THRUST COLLAR
(12)	24" D.I. 90° BEND, MJxMJ	
(13)	24" D.I. DISMANTLING JOINT, MJxMJ	
(14)	24"x20" D.I. ECCENTRIC REDUCER, MJxMJ	ECCENTRIC
(15)	CLEANOUT	SEE DETAIL SHEETS
(16)	12" EXPANSION JOINT	BY VICTAULIC
(17)	ADJUSTABLE PIPE SUPPORT/STAND	SPACE AS NEEDED
(18)	WALL MOUNTED PIPE SUPPORT	
(19)	20" D.I. SPOOL, FLxFL/FLxMJ	MJ UNDERGROUND
(20)	20" D.I. 90° BEND, MJxMJ	
(21)	20" D.I. WALL PIPE, FLxPE	WITH THRUST COLLAR
(22)	6" D.I. CROSS, MJxMJ	
(23)	8" D.I. CROSS, MJxMJ	
(24)	CONCRETE PIPE SUPPORT	

NOTES:
1. PROVIDE PIPE SUPPORTS AS NECESSARY. NOT SHOWN FOR CLARITY.

VALVE SCHEDULE - STRUCTURE #10A-10C & #12			
VALVE I.D.	VALVE TYPE	VALVE SIZE	MOTORIZED
L6FPV01	PLUG	20"	NO
L6FPV02	PLUG	20"	YES
L7ABV01	BUTTERFLY	18"	YES
L7AKV01	KNIFE	24"	NO
L6GPV01	PLUG	20"	NO
L6GPV02	PLUG	20"	YES
L7BBV01	BUTTERFLY	18"	YES
L7BKV01	KNIFE	24"	NO
L6HPV01	PLUG	20"	NO
L6HPV01	PLUG	20"	YES
L7GBV01	BUTTERFLY	18"	YES
L7GKV01	KNIFE	24"	NO
10APV01	PLUG	12"	NO
10BPV01	PLUG	12"	NO
10CPV01	PLUG	12"	NO
L12APV01	PLUG	6"	YES
L12BPV01	PLUG	6"	YES
L12CPV01	PLUG	6"	YES
L9ABV01	BUTTERFLY	24"	YES
L9BBV01	BUTTERFLY	24"	YES
L9CBV01	BUTTERFLY	24"	YES
L36AMV01	MUD	8"	NO
L36BMV01	MUD	8"	NO
L36CMV01	MUD	8"	NO
L7AGV01	GLOBE	¾"	NO
L7BGV01	GLOBE	¾"	NO
L7CGV01	GLOBE	¾"	NO



NOTES:
1. MJD VALVES SHALL BE FURNISHED WITH STEM, WALL ANCHORS, AND HANDWHEEL OPERATOR IN A COMPLETE SYSTEM FOR WALL MOUNTING WITH WHEEL OPERATOR AT WALKWAY LEVEL. SUBMITTAL REQUIRED.
2. ALL MOTORIZED VALVES TO BE SUPPLIED WITH HANDWHEEL OPERATORS.
3. L10APV01, L10BPV01, AND L10CPV01 TO BE FURNISHED WITH STEMS AND STEM SUPPORTS TO EXTEND TO THE TOP OF THE BASIN WALL PER THE MANUFACTURERS RECOMMENDATIONS.
4. GLOBE VALVES TO BE USED TO FILL SBR DECANTER TO RELEASE AIR.
5. AIR PIPING TO BE SUPPORTED TO PREVENT SLIPPAGE AND TO BE LOOSELY ATTACHED TO ALLOW PIPE MOVEMENT.
6. AIR PIPING SHALL BE GROOVED DUCTILE IRON. COMPLETE SYSTEM TO BE DESIGNED AND FURNISHED BY VICTAULIC.

WALL ENGINEERING
223 N. WASHINGTON AVE., DURANT, OK 74701
OKLAHOMA CA #5413 EXP. JUNE 30, 2023

SUBMITTAL / REVISIONS:

DATE	BY	SUBMITTAL / REVISION
03/22	JR	ODEQ SUBMITTAL
06/22	JR	ISSUED FOR BIDDING
07/22	JR	REVISED PER ADDENDUM NO. 2

SHAWNEE MUNICIPAL AUTHORITY
WASTEWATER SYSTEM IMPROVEMENTS
CONTRACT DOCUMENTS VOL. 4 OF 6 - NORTHSIDE WWTP

SEQUENCING BATCH REACTOR
ELEVATION VIEWS

PROJECT NO.
SHN-20-01
DATE
06/22
DRAWN BY:
JR
CHECKED BY:
BW
REVIEWED BY:
DBW
SCALE:
1/8"=1'-0"

BAR IS ONE INCH ON ORIGINAL DRAWING
0" 1"
IF NOT ONE INCH ON THIS SHEET, ADJUST SCALES ACCORDINGLY

SHEET
SBR-3

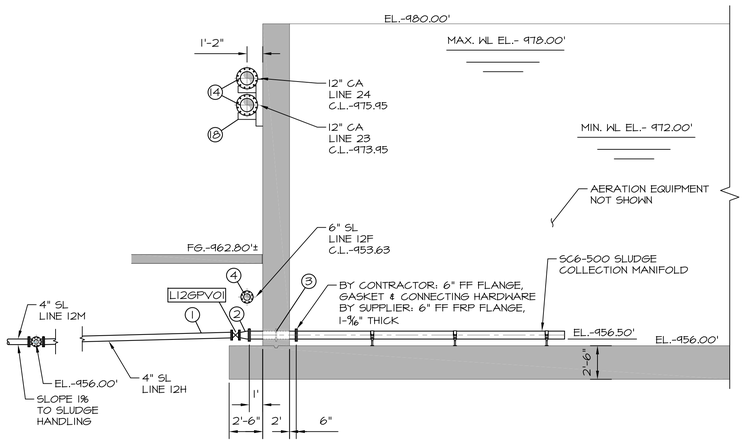

A AD-1 **SECTION**
SCALE: 3/16"=1'-0"

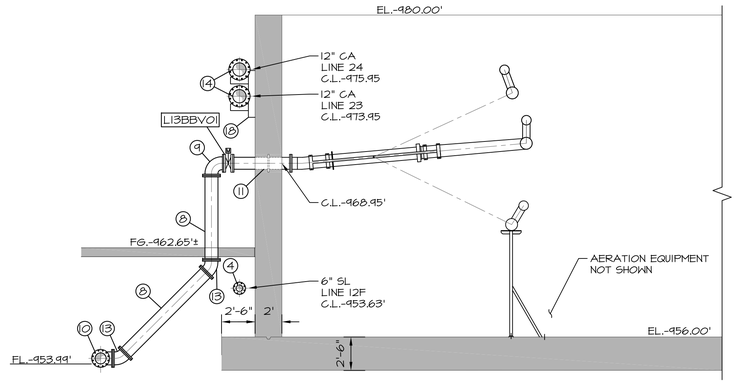

B AD-1 **SECTION**
SCALE: 3/16"=1'-0"

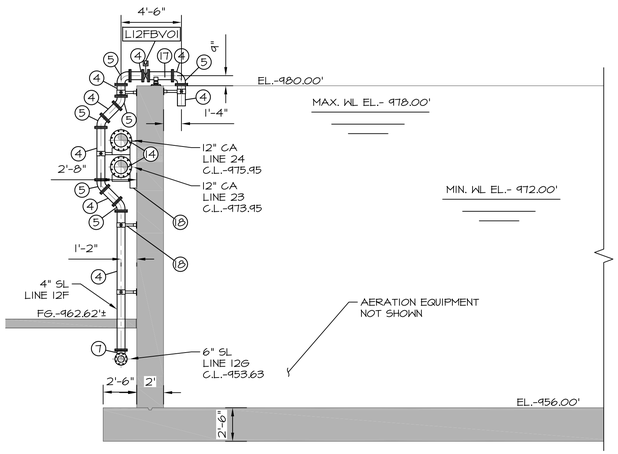

C AD-1 **SECTION**
SCALE: 3/16"=1'-0"

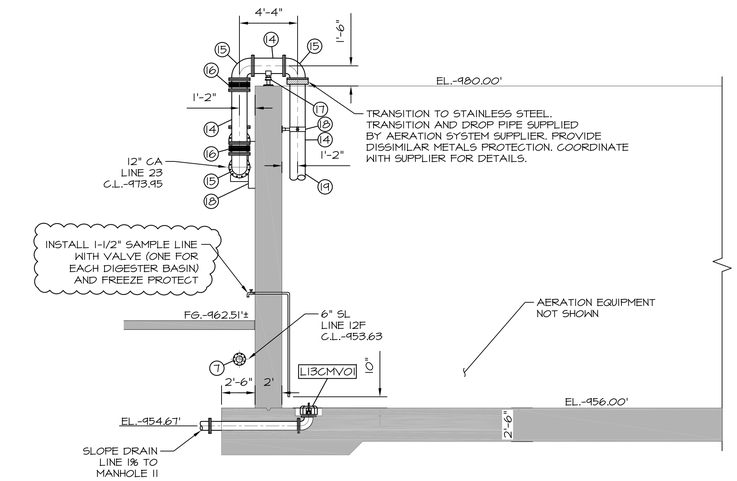

D AD-1 **SECTION**
SCALE: 3/16"=1'-0"

NOTES:

1. CONTRACTOR NEEDS TO PROVIDE A ¾" NIPPLE AND GLOBE VALVE BETWEEN OUTSIDE OF DECANTER SPOOL PENETRATION AND EFFLUENT CONTROL VALVE TO SERVE AS A FILL PORT TO SINK DECANTER AT START-UP.
2. DECANTER OUTLET PIPING MUST BE DESIGNED WITH A SUBMERGED OUTLET OR TRAPS TO PREVENT AIR FROM ENTERING THE DECANTER.
3. ALL PIPE ELEVATIONS SHOWN ARE CENTER OF PIPE UNLESS OTHERWISE INDICATED.
4. ALL FRP PIPE AND FITTINGS SHALL BE 75 PSI MIN. PRESSURE RATING.
5. ALL FLANGES FURNISHED BY SUPPLIER SHALL MEET OUTSIDE DIAMETER, BOLT CIRCLE DIAMETER, NUMBER AND SIZE OF HOLES PER ANSI B.16.1 125 LB. CAST IRON, AND ANSI B16.5 150 LB. STEEL FLANGE SPECIFICATIONS.
6. GASKETS PROVIDED BY SUPPLIER SHALL BE 3/16" THICK, FULL FACE BUNA-N RUBBER, WITH A DUROMETER HARDNESS OF 40-50 ON THE SHORE-A SCALE.

NOTES:

1. ALL COMPONENTS SHALL BE DUCTILE IRON OR STAINLESS STEEL.
2. ALL ELECTRONICALLY ACTUATED VALVES TO ALSO BE EQUIPPED WITH HAND WHEEL OPERATORS.
3. PIPE SUPPORT LOCATIONS ARE FOR REFERENCE ONLY & MORE MAY BE REQUIRED PER SPECIFICATION REQUIREMENTS AND/OR INDUSTRY STANDARD.
4. ALL AERATION COMPONENTS INTERNAL TO BASINS TO BE STAINLESS STEEL. SYSTEM TO BE DESIGNED AND FURNISHED BY SUPPLIER. COORDINATE WITH SUPPLIER FOR INSTALLATION DETAILS AND CONSTRUCTION INFORMATION.
5. MUD VALVES SHALL BE FURNISHED WITH STEM, WALL ANCHORS, AND HANDWHEEL OPERATOR IN A COMPLETE SYSTEM FOR WALL MOUNTING WITH WHEEL OPERATOR AT WALKWAY LEVEL. SUBMITTAL REQUIRED.
6. GLOBE VALVES TO BE USED TO FILL SBR DECANTER TO RELEASE AIR.
7. AIR PIPING TO BE SUPPORTED TO PREVENT SLIPPAGE AND TO BE LOOSELY ATTACHED TO ALLOW PIPE MOVEMENT.

VALVE SCHEDULE - STRUCTURE #11A & #11B

VALVE I.D.	VALVE TYPE	VALVE SIZE	MOTORIZED
L12EBVO1	BUTTERFLY	6"	YES
L12FBVO1	BUTTERFLY	6"	YES
L12GPVO1	PLUG	4"	YES
L12HPVO1	PLUG	4"	YES
L13ABVO1	PLUG	10"	YES
L13AGVO1	GLOBE	¾"	NO
L13BBVO1	PLUG	10"	YES
L13BGVO1	GLOBE	¾"	NO
L13BMVO1	MUD	8"	NO
L13CMVO1	MUD	8"	NO

PIPING SCHEDULE STRUCTURE #11A & #11B

NO.	ITEM	DESCRIPTION/NOTES
1	4" D.I. SPOOL	
2	4"x6" D.I. ECCENTRIC REDUCER, M.JxM.J	ECCENTRIC
3	6" D.I. WALL PIPE, M.JxPE	WITH THRUST COLLAR
4	6" D.I. SPOOL, FLxFL	M.J UNDERGROUND
5	6" D.I. 45° BEND, FLxFL	
6	6" D.I. 90° BEND, FLxFL	M.J UNDERGROUND
7	6" D.I. TEE, FLxFL	M.J UNDERGROUND
8	10" D.I. SPOOL	
9	10" D.I. 90° BEND, M.JxM.J	
10	10" D.I. TEE, M.JxM.J	
11	10" D.I. WALL PIPE, FLxPE	WITH THRUST COLLAR
12	10" D.I. SPOOL	
13	10" D.I. 45° BEND, M.JxM.J	
14	12" D.I. SPOOL, GRxGR	SEE NOTE 6 (SBR-3)
15	12" D.I. 90° BEND, GRxGR	SEE NOTE 6 (SBR-3)
16	12" EXPANSION JOINT	BY VICTAULIC
17	ADJUSTABLE PIPE SUPPORT/STAND	
18	CONCRETE CRADLE PIPE SUPPORT	
19	12" SST DROP PIPE	COORDINATE WITH SUPPLIER
20	10x10x10x8" D.I. CROSS, FLxFL	
21	CLEANOUT	SEE DETAIL SHEETS



WALL ENGINEERING
223 N. WASHINGTON AVE., DURANT, OK 74701
OKLAHOMA CA #5413 EXP. JUNE 30, 2023

SUBMITTAL / REVISIONS:

DATE	BY	SUBMITTAL / REVISION
03/22	JR	ODEQ SUBMITTAL
05/22	JR	REVISED PER ODEQ COMMENT
06/22	JR	ISSUED FOR BIDDING
07/22	JR	REVISED PER ADDENDUM NO. 1
07/22	JR	REVISED PER ADDENDUM NO. 2

SHAWNEE MUNICIPAL AUTHORITY
WASTEWATER SYSTEM IMPROVEMENTS
CONTRACT DOCUMENTS VOL. 4 OF 6 - NORTHSIDE WWTP

AEROBIC DIGESTER
SECTION VIEWS AND SCHEDULES

PROJECT NO.
SHN-20-01
DATE
06/22
DRAWN BY:
JR
CHECKED BY:
BW
REVIEWED BY:
DBW
SCALE:
3/16"=1'-0"

BAR IS ONE INCH ON ORIGINAL DRAWING
0" 1"
IF NOT ONE INCH ON THIS SHEET, ADJUST SCALES ACCORDINGLY

SHEET
AD-2

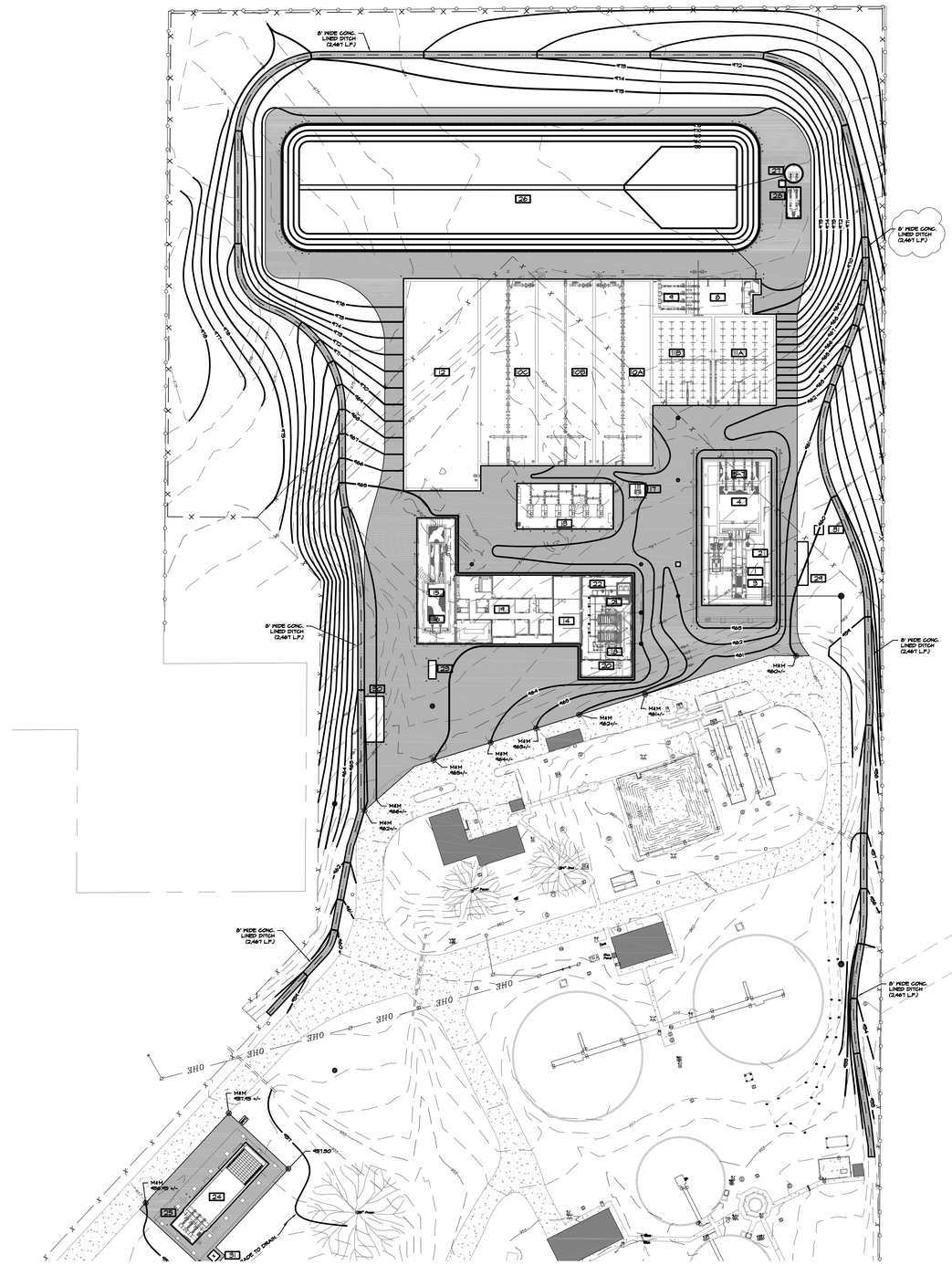
8' WIDE CONC. LINED DITCH (3,461 LF.)
8' WIDE CONC. LINED DITCH (3,461 LF.)
8' WIDE CONC. LINED DITCH (3,461 LF.)
8' WIDE CONC. LINED DITCH (3,461 LF.)
8' WIDE CONC. LINED DITCH (3,461 LF.)
OHE
MH# 1004.4+/-
MH# 1004.0+/-
MH# 1003.6+/-
MH# 1003.2+/-
MH# 1002.8+/-
MH# 1002.4+/-
MH# 1002.0+/-
MH# 1001.6+/-
MH# 1001.2+/-
MH# 1000.8+/-
MH# 1000.4+/-
MH# 1000.0+/-
MH# 999.6+/-
MH# 999.2+/-
MH# 998.8+/-
MH# 998.4+/-
MH# 998.0+/-
MH# 997.6+/-
MH# 997.2+/-
MH# 996.8+/-
MH#

PIPING LEGEND

RS	RAW SEWAGE - DI CLASS 350 RJ
PE	PRIMARY EFFLUENT - DI CLASS 250 RJ/HDPE DRII
SE	SECONDARY EFFLUENT - DI CLASS 250 RJ
WS	WASTE SLUDGE - DI CLASS 250 RJ
SW	STORM WATER - DI CLASS 250 RJ
FE	FINAL EFFLUENT - DI CLASS 250 RJ
EF	EFFLUENT FORCE MAIN - HDPE DRII/DI CLASS 250 RJ
NPW	NON-POTABLE WATER - DI CLASS 250 RJ
PW	POTABLE WATER - DI CLASS 250 RJ
SL	SLUDGE - DI CLASS 250 RJ
CA	COMPRESSED AIR - UNLINED DI CLASS 250 RJ
DR	DRAIN LINE - DI CLASS 250 RJ

MANHOLE/BOX LEGEND

NO.	DIA	TR	INFLUENT FL	EFFLUENT FL	NORTHING	EASTING
MH-1	6'	457.27'	929.77'	929.76'	756381.2615	2249217.8822
MH-2	6'	454.90'	929.11'	929.16'	756114.4646	2249217.8822
MH-3	6'	964.77	946.24'	946.24'	756618.3418	2248842.3241
MH-4	6'	465.50	945.57'	945.57'	756528.6511	2248752.6341
MH-5	6'	458.65	944.28'	944.28'	756283.5625	2248752.6341
DB-6	4'x4'	462.40	VARIES	932.08'	756748.6302	2249068.0509
MH-7	4'	464.31	950.35'	950.30'	756704.1928	2249034.1164
MH-8	4'	464.26	950.56'	950.46'	756675.6093	2249034.1164
MH-9	4'	462.05	931.55'	931.45'	756114.4646	2249068.0509
MH-10	4'	462.85	952.93'	952.83'	756826.0052	2249068.0509
MH-11	4'	462.67	953.90'	953.80'	756883.0712	2249068.0531
MH-12	4'	464.63	951.05'	950.95'	756748.6302	2248878.5484
MH-13	4'	463.65	950.27'	950.17'	756748.6302	2249034.1164

NOTE:

1. MANHOLE M-3, MH-7, MH-8, MH-9, MH-10, MH-11, SHALL HAVE SLOTTED LIDS TO ALLOW FOR VENTILATION.
2. LINE 14-C TO EXTEND SLIGHTLY INTO MH-6 AND CONTAIN AN 8" FLAP VALVE.
3. DB-6 TO BE PRE-ENGINEERED (S.E.) 4'x4' CONCRETE VAULT W/TRAFFIC RATED GRATED TOP. SEE PROFILE FOR LINE ELEVATIONS. SUBMITTAL REQUIRED.
4. SOME VALVES SHOWN ON OTHER DRAWINGS HAVE BEEN OMITTED FOR CLARITY.

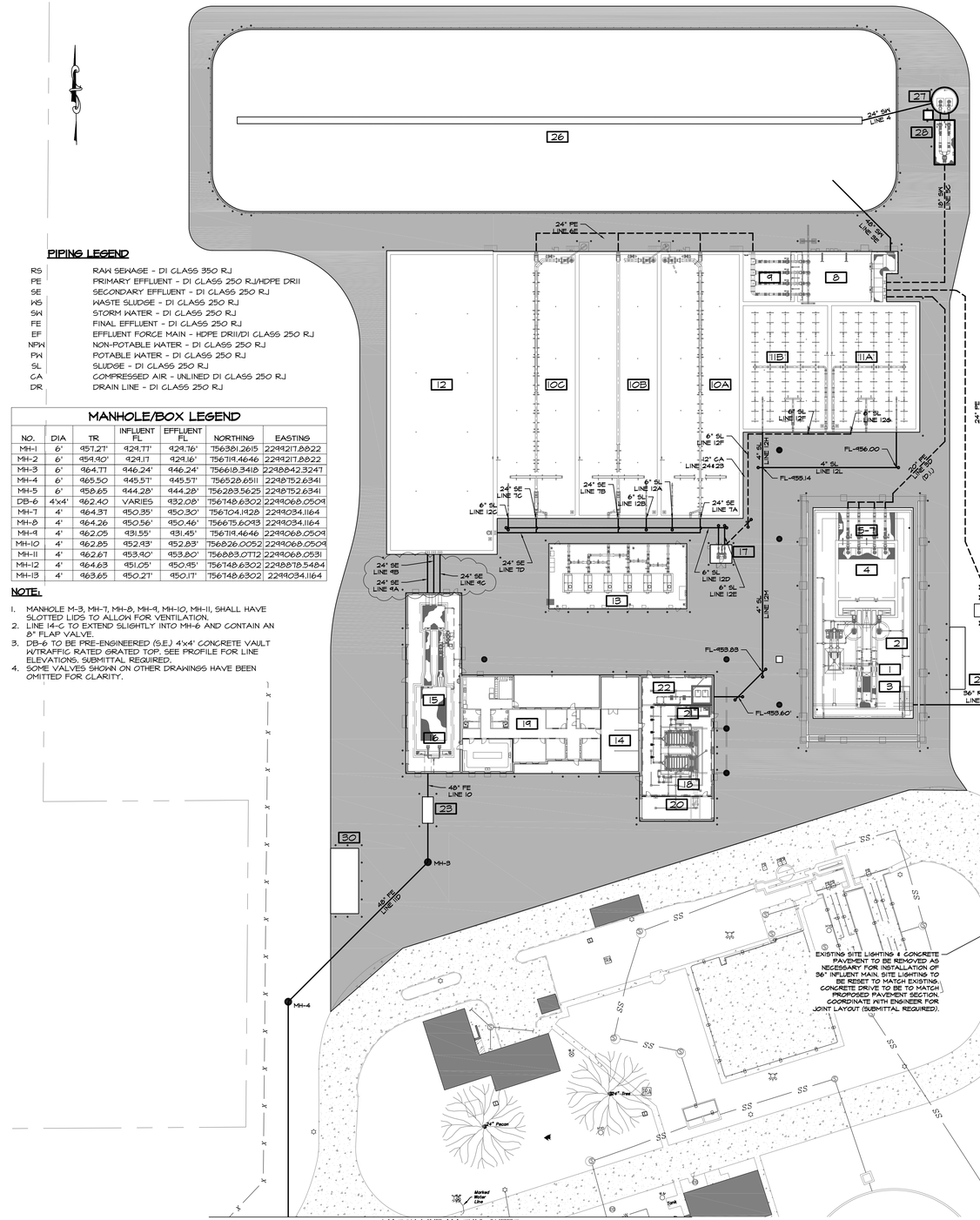

PROPOSED UNIT LEGEND

1	HEADWORKS FINE SCREEN
2	HEADWORKS GRIT CHAMBERS
3	HEADWORKS MANUAL BAR SCREEN
4	INFLUENT LIFT STATION
5	FLOW METER STRUCTURE (ILS-STORM)
6	FLOW METER STRUCTURE (ILS-SBR)
7	FLOW METER STRUCTURE (SS FM)
8	SBR PRE-EQUALIZATION BASIN
9	SBR FLOW CONTROL STRUCTURE
10	SEQUENCING BATCH REACTOR
11	AEROBIC DIGESTER
12	SBR POS-EQUALIZATION BASIN
13	SBR/AD BLOWERS
14	ELECTRIC / CONTROLS
15	UV DISINFECTION
16	NON-POTABLE WATER
17	AD DIGESTED SLUDGE PUMPS
18	BELT FILTER PRESS
19	ADMINISTRATIONS BUILDING
20	SLUDGE LOADING
21	POLYMER FEED SYSTEM
22	NON-POTABLE BOOSTER PUMPS (BPP)
23	EFFLUENT PARSHALL FLUME
24	EFFLUENT LIFT STATION
25	FLOW METER STRUCTURE (ELS)
26	WET WEATHER FLOW EQUALIZATION BASIN
27	FEB RETURN LIFT STATION
28	FLOW METER STRUCTURE (FEBLS)
29	GENERATOR (15KW)
30	GENERATOR (1,750KW)
31	MAG METER VAULT

LEGEND

- EXISTING ASPHALT
- EXISTING GRAVEL
- STRUCTURE
- CONCRETE PAVING
- SECURITY FENCE
- EXISTING SECURITY FENCE
- EXISTING BARBWIRE FENCE
- PRESSURE PIPE
- AIR PIPE
- GRAVITY PIPE
- MAG-METER IN VAULT
- CONCRETE MANHOLE
- CONCRETE JUNCTION BOX
- CLEAN OUT
- PIPE BOLLARD
- VALVE

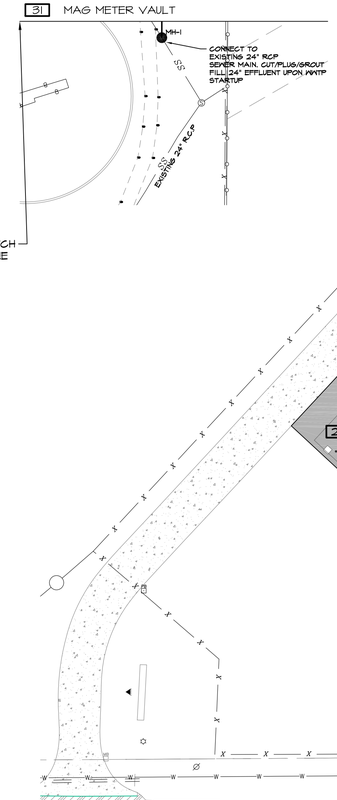

MATCH LINE 'A' THIS SHEET

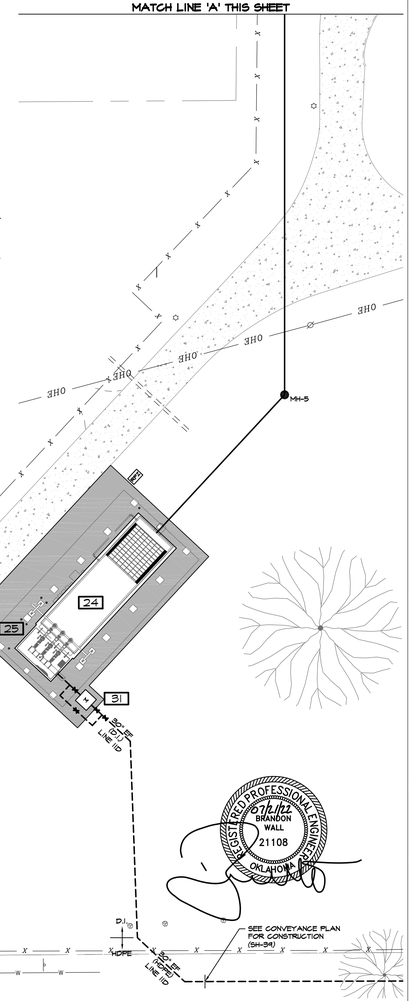

WALL ENGINEERING
223 N. WASHINGTON AVE., DURANT, OK 74701
OKLAHOMA CA #5413 EXP. JUNE 30, 2023

SUBMITTAL / REVISIONS:

DATE	BY	SUBMITTAL / REVISION
03/22	JR	ODEQ SUBMITTAL
06/22	JR	ISSUED FOR BIDDING
07/22	JR	REVISED PER ADDENDUM NO. 1
07/22	JR	REVISED PER ADDENDUM NO. 2

SHAWNEE MUNICIPAL AUTHORITY
WASTEWATER SYSTEM IMPROVEMENTS
CONTRACT DOCUMENTS VOL. 4 OF 6 - NORTHSIDE WWTP

PRIMARY PIPING PLAN

PROJECT NO.
SHN-20-01
DATE
06/22
DRAWN BY:
JR
CHECKED BY:
BW
REVIEWED BY:
DBW
SCALE:
1"=40'

BAR IS ONE INCH ON ORIGINAL DRAWING
0" 1"
IF NOT ONE INCH ON THIS SHEET, ADJUST SCALES ACCORDINGLY

REGISTERED PROFESSIONAL ENGINEER
07/11/22
BRANDON WALL
21108
OKLAHOMA

SHEET
C-13

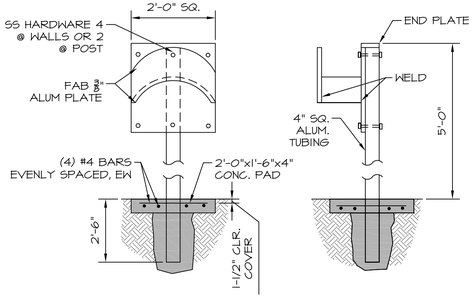

SELF SUPPORTED HOSE RACK
N.T.S

NOTES:

1. PROVIDE HOSE RACK AT WALL & YARD HYDRANTS UNLESS A HOSE REEL OR WALL MOUNTED UTILITY STATION IS INDICATED ON THE DRAWINGS.
2. LESS POST & CONC. FOR WALL MT INSTALLATION
3. MATERIALS TO BE ALUMINUM OR OTHER CORROSION RESISTANT MATERIAL AS APPROVED BY ENGINEER

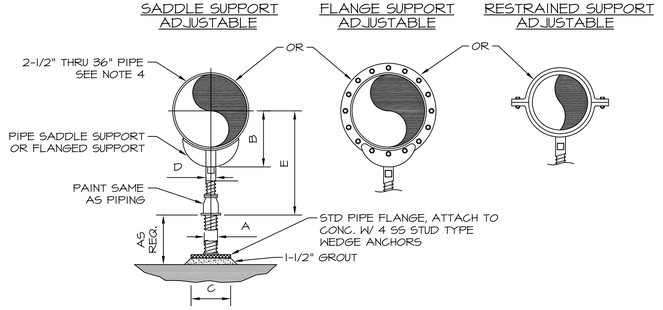

ADJUSTABLE FLOOR MOUNTED PIPE SUPPORT
N.T.S

NOTES:

1. PROVIDE HALF ROUND RIGID INSULATION & INSULATION PROTECTION SHIELD WHERE PIPING IS INSULATED
2. PROVIDE NEOPRENE WAFFLE INSULATION PAD, SIMILAR TO MASON TYPE "W" OR KORFUND 40, UNDER SUPPORT FOOT WHEN PIPING IS ISOLATED OR SUPPORT IS ADJACENT TO MECHANICAL EQUIUPMENT.
3. FOR BASE, HEIGHT & FLANGE DIMENSIONS, SEE TABLE.

DIMENSION TABLE

PIPE SIZE	A	B	C	D	E MIN	E MAX
2-1/2"	2-1/2"	3-1/2"	9"	1-1/2"	8"	13"
3"	2-1/2"	3-3/4"	9"	1-1/2"	8-1/4"	1'-1 1/4"
3-1/2"	2-1/2"	4"	9"	1-1/2"	8-1/2"	13-1/2"
4"	3"	4-1/4"	9"	2-1/2"	9-1/4"	14"
5"	3"	4-7/8"	9"	2-1/2"	10"	14-3/4"
6"	3"	5-1/2"	9"	2-1/2"	10-1/2"	15-1/4"
8"	3"	6-7/8"	9"	2-1/2"	11-3/4"	15-1/2"
10"	3"	8-1/2"	9"	2-1/2"	13-1/2"	18-1/4"
12"	3"	9-15/16"	9"	2-1/2"	15"	19-3/4"
14"	4"	10-15/16"	11"	3"	16-1/4"	20-3/4"
16"	4"	12-3/8"	11"	3"	17-3/4"	22-1/4"
18"	6"	13-7/8"	13-1/2"	3-1/2"	19-1/2"	24"
20"	6"	15-3/8"	13-1/2"	3-1/2"	21"	25-1/2"
24"	6"	17-15/16"	13-1/2"	4"	23-3/4"	28-1/4"
30"	6"	21-5/16"	13-1/2"	4"	27"	31-1/2"
32"	6"	22-1/2"	13-1/2"	4"	28-1/4"	32-3/4"
36"	6"	24-1/2"	13-1/2"	4"	30-1/4"	34-3/4"

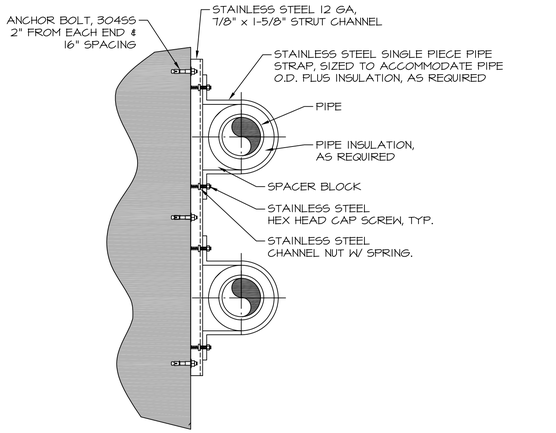

STAINLESS STEEL STRUT CHANNEL PIPE SUPPORT
N.T.S

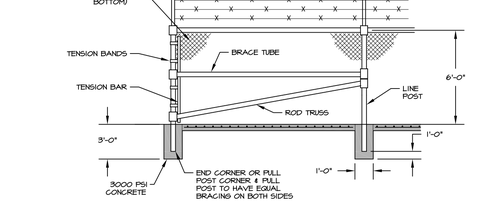

CHAIN LINK FENCE
N.T.S.

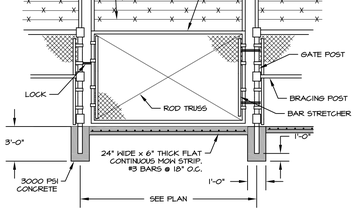

SINGLE GATE
N.T.S.

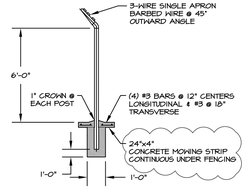

FENCE POST
N.T.S.

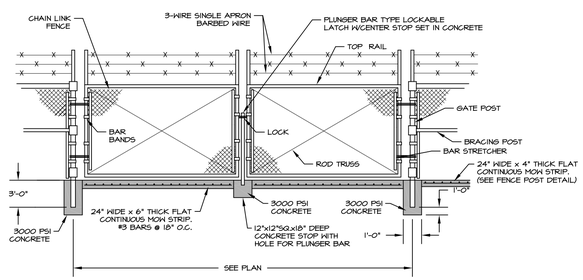

DOUBLE SWING GATE
N.T.S.

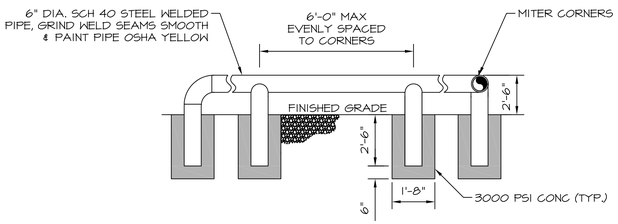

GUARD RAIL DETAIL
N.T.S

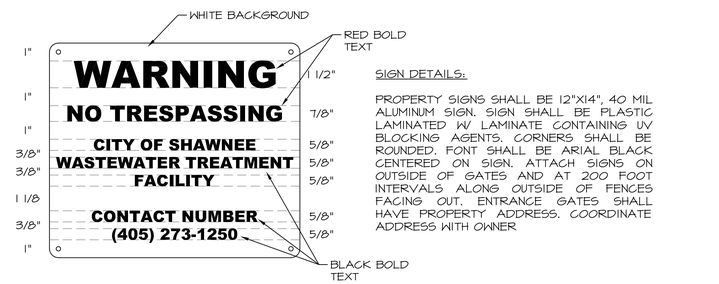

TYPICAL PERMANENT WARNING SIGN
N.T.S.

SIGN DETAILS:

PROPERTY SIGNS SHALL BE 12"X14", 40 MIL ALUMINUM SIGN. SIGN SHALL BE PLASTIC LAMINATED W/ LAMINATE CONTAINING UV BLOCKING AGENTS. CORNERS SHALL BE ROUNDED. FONT SHALL BE ARIAL BLACK CENTERED ON SIGN. ATTACH SIGNS ON OUTSIDE OF GATES AND AT 200 FOOT INTERVALS ALONG OUTSIDE OF FENCES FACING OUT. ENTRANCE GATES SHALL HAVE PROPERTY ADDRESS. COORDINATE ADDRESS WITH OWNER



WALL ENGINEERING
223 N. WASHINGTON AVE. DURANT, OK 74701
OKLAHOMA CA #6413 EXP. JUNE 30, 2023

SUBMITTAL / REVISIONS:

DATE	BY	SUBMITTAL / REVISION
03/22	JR	ODEQ SUBMITTAL
06/22	JR	ISSUED FOR BIDDING
07/22	JR	REVISED PER ADDENDUM NO. 2

SHAWNEE MUNICIPAL AUTHORITY
WASTEWATER SYSTEM IMPROVEMENTS
CONTRACT DOCUMENTS VOL. 4 OF 6 - NORTHSIDE WWTP

MISCELLANEOUS DETAILS

PROJECT NO.
SHN-20-01
DATE
06/22
DRAWN BY:
JR
CHECKED BY:
TA
REVIEWED BY:
DBW
SCALE:
AS NOTED

BAR IS ONE INCH ON ORIGINAL DRAWING
0" 1"
IF NOT ONE INCH ON THIS SHEET, ADJUST SCALES ACCORDINGLY

SHEET
DT-6

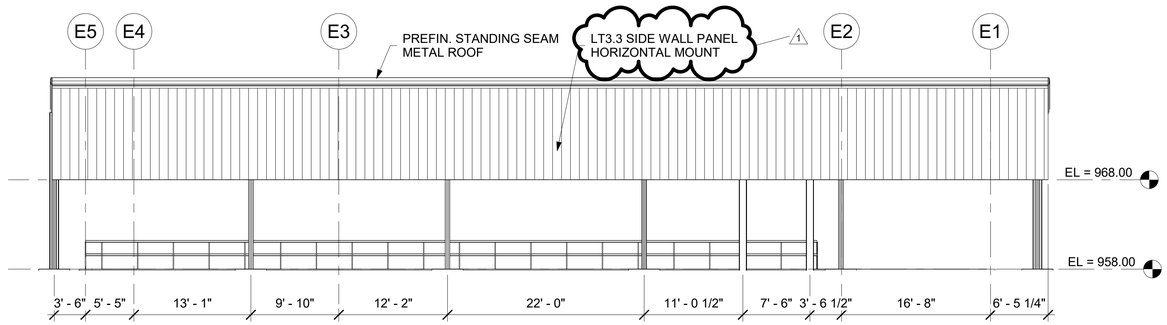

1 EFFLUENT LIFT STATION PEMB NORTH ELEVATION
1/8" = 1'-0"

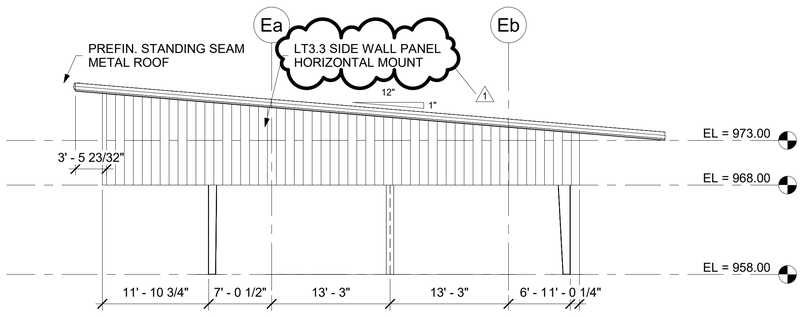

4 EFFLUENT LIFT STATION PEMB WEST ELEVATION
1/8" = 1'-0"

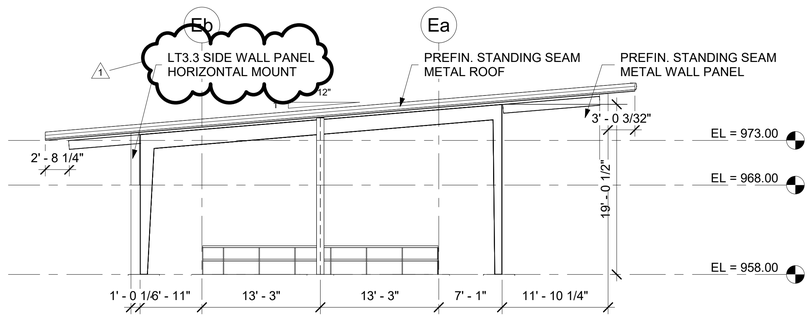

3 EFFLUENT LIFT STATION PEMB EAST ELEVATION
1/8" = 1'-0"

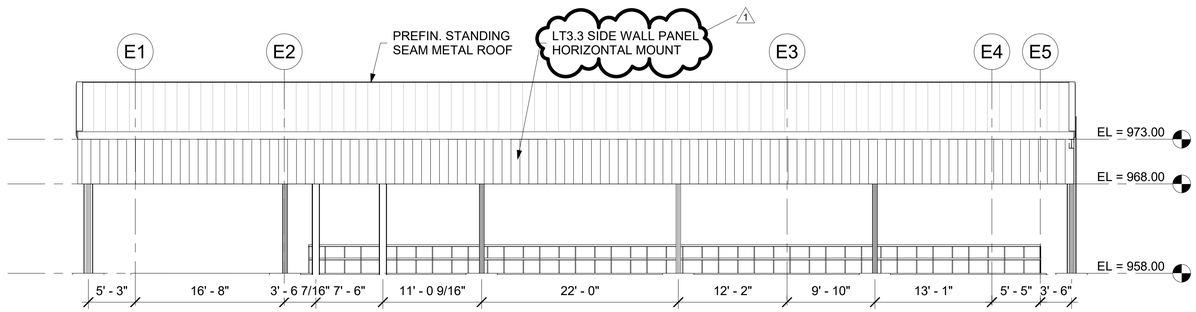

2 EFFLUENT LIFT STATION PEMB SOUTH ELEVATION
1/8" = 1'-0"

WALL ENGINEERING
PO BOX 1457, DURANT, OK 74702
OKLAHOMA CA #5413 EXP. JUNE 30, 2023

SUBMITTAL / REVISIONS:

REV NO.	SUBMITTAL/REVISION	DATE
1	Addendum 2	7/11/22

SHAWNEE MUNICIPAL AUTHORITY
WASTEWATER SYSTEM IMPROVEMENTS
SHAWNEE, OKLAHOMA

EFFLUENT LIFT STATION ELEVATIONS

PROJECT NO.
BKL 801

DATE
JUNE 2022

DRAWN BY:
HTS

CHECKED BY:
SAL

REVIEWED BY:
JDH

SCALE:

BAR IS ONE INCH ON ORIGINAL DRAWING
0" 1"
IF NOT ONE INCH ON THIS SHEET, ADJUST SCALES ACCORDINGLY

SHEET

ELS-S6



6/21/22

BKL 801 PRINT DATE: 7/15/2022 5:10:08 PM

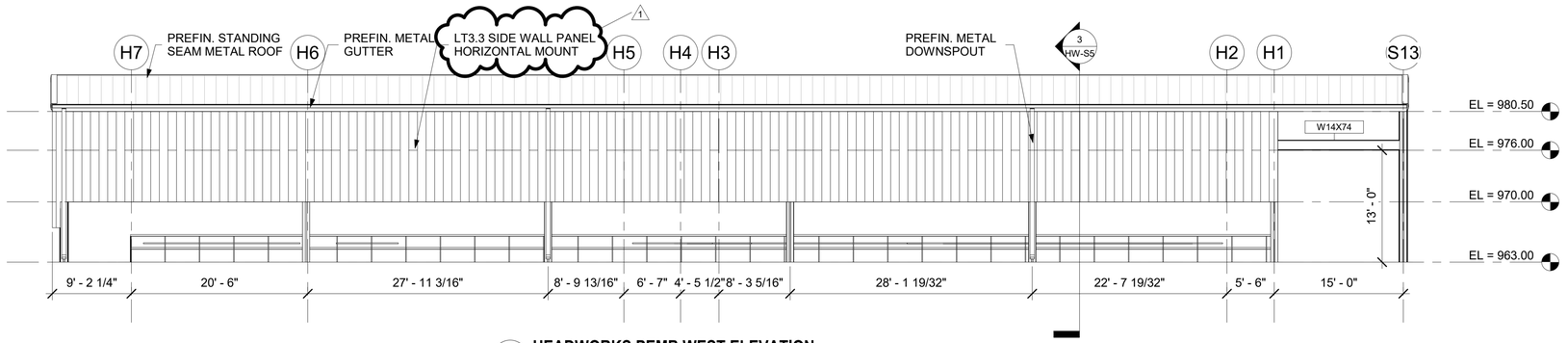

1 HEADWORKS PEMB WEST ELEVATION
1/8" = 1'-0"

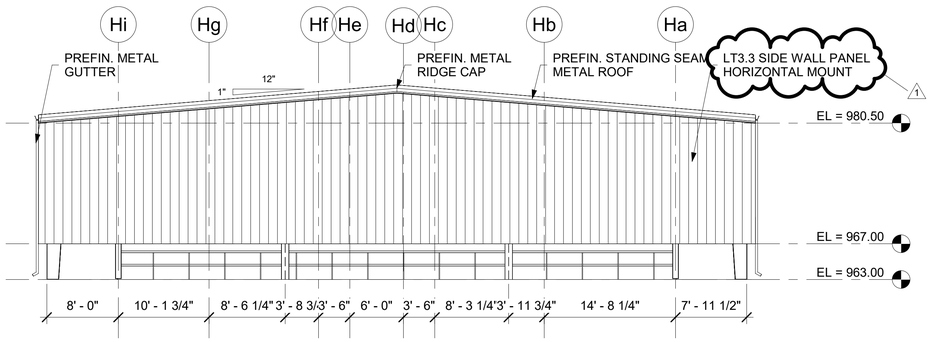

2 HEADWORKS PEMB NORTH ELEVATION
1/8" = 1'-0"

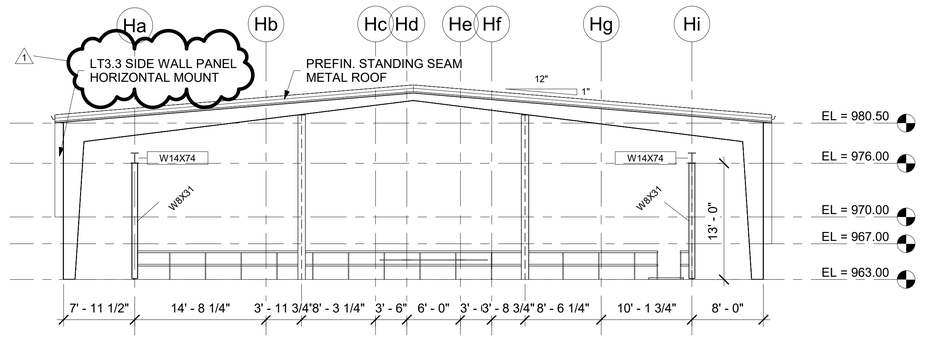

4 HEADWORKS PEMB SOUTH ELEVATION
1/8" = 1'-0"

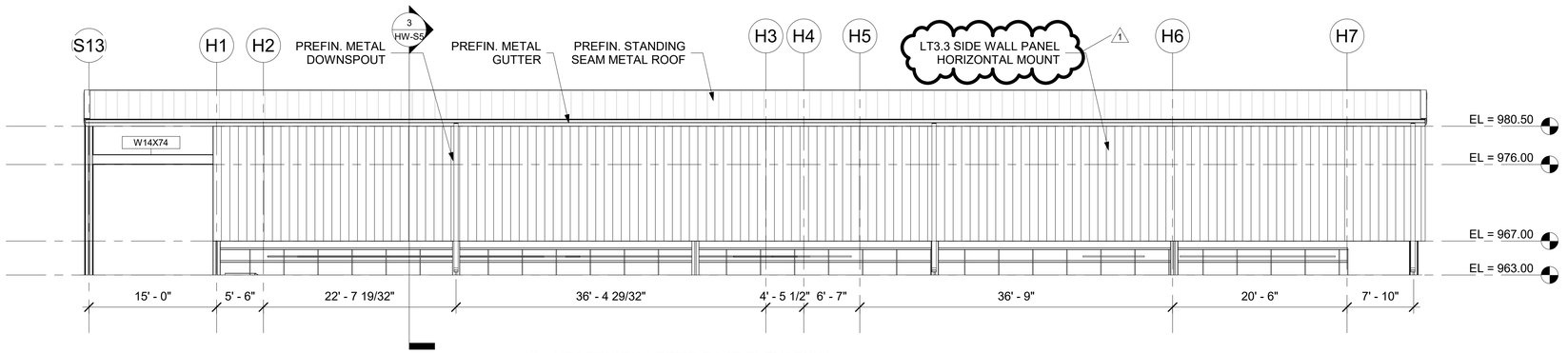

3 HEADWORKS PEMB EAST ELEVATION
1/8" = 1'-0"



6/21/22

WALL ENGINEERING
PO BOX 1457, DURANT, OK 74702
OKLAHOMA CA #5413 EXP. JUNE 30, 2023

SUBMITTAL / REVISIONS:

REV NO.	SUBMITTAL/REVISION	DATE
1	Addendum 2	7/11/22

SHAWNEE MUNICIPAL AUTHORITY
WASTEWATER SYSTEM IMPROVEMENTS
SHAWNEE, OKLAHOMA

HEADWORKS ELEVATIONS

PROJECT NO.
BKL 801

DATE
JUNE 2022

DRAWN BY:
HTS

CHECKED BY:
SAL

REVIEWED BY:
JDH

SCALE:

BAR IS ONE INCH ON ORIGINAL DRAWING
0" 1"
IF NOT ONE INCH ON THIS SHEET, ADJUST SCALES ACCORDINGLY

SHEET

HW-S10

BKL 801 PRINT DATE: 7/15/2022 5:11:59 PM

POWER AND LIGHTING LEGEND

ABBREVIATION OR SYMBOL / DESCRIPTION

FIXTURE DESIGNATION

- 2x4 LAY-IN OR SURFACE MOUNTED FIXTURE
- 2x4 LAY-IN OR SURFACE MOUNTED FIXTURE; SHADING INDICATES EMERGENCY POWERED BATTERY
- 2x2 LAY-IN OR SURFACE MOUNTED FIXTURE
- 2x2 LAY-IN OR SURFACE MOUNTED FIXTURE; SHADING INDICATES EMERGENCY POWERED BATTERY
- SURFACE OR STRIP FIXTURE
- RECESSED STRIP FIXTURE; SHADING INDICATES EMERGENCY POWERED BATTERY
- RECESSED DOWNLIGHT
- RECESSED DOWNLIGHT; SHADING INDICATES EMERGENCY POWERED BATTERY
- WALL-MOUNTED LINEAR FIXTURE
- DOWNLIGHT FIXTURE
- DOWNLIGHT FIXTURE. SHADING INDICATES EMERGENCY POWERED BATTERY
- WALL-MOUNTED FIXTURE
- EXIT SIGN; LED TYPE. DARKENED AREA INDICATES FACE. ARROWS INDICATE DIRECTION OF EGRESS
- RECESSED ELECTRICAL PANEL WITH REQUIRED CLEARANCE
- SURFACE MOUNTED ELECTRICAL PANEL WITH REQUIRED CLEARANCE
- COMBINATION STARTER DISCONNECT SWITCH
- NON FUSED DISCONNECT SWITCH
- FUSED DISCONNECT SWITCH
- MOTOR STARTER
- (M) ELECTRIC MOTOR, HORSEPOWER AS SHOWN.
- [J] JUNCTION BOX
- [J]XYZ SPECIALTY JUNCTION BOX WITH DESIGNATION "XYZ". REFER TO JBOX ABBREVIATION LEGEND.
- DISH DISHWASHER

DATA DEVICES

- A F — TELEPHONE OUTLET; ABOVE COUNTER, & FIREMAN'S
- A C — DATA OUTLET; ABOVE COUNTER & CEILING MOUNTED
- A — COMBINATION DATA/TELEPHONE OUTLET & COMBINATION DATA/TELEPHONE OUTLET ABOVE COUNTER
- TV@4' — TELEVISION OUTLET WITH HEIGHT A.F.F. DESIGNATION

ABBREVIATION OR SYMBOL / DESCRIPTION

FLOOR BOXES

FLOOR/WALL BOX WITH DESIGNATION "XYZ". REFER TO FLOOR/WALL BOX ABBREVIATION SCHEDULE.

XYZ

(1) DUPLEX RECEPTACLE
(2) GFI DUPLEX RECEPTACLE
(3) QUADRUPLEX RECEPTACLE
(4) GFI QUADRUPLEX RECEPTACLE

(6) TELEPHONE OUTLET
(7) DATA OUTLET
(8) COMBO TELE/DATA OUTLET
(9) AUDIO VISUAL

	DUPLEX	QUADRUPLEX
STANDARD		
ABOVE COUNTER		
GFCI		
GFCI ABOVE COUNTER		
WEATHER PROOF		
CEILING MOUNT		

ABC — MULTI POLE RECEPTACLE. REFER TO RECEPTACLE ABBREVIATION LEGEND FOR DETAILS.

XYZ — SIMPLEX RECEPTACLE. REFER TO RECEPTACLE ABBREVIATION LEGEND FOR DETAILS.

SPECIALTY RECEPTACLES WITH DESIGNATION "XYZ", "ABC", etc. REFER TO RECEPTACLE ABBREVIATION LEGEND BELOW.

DSP	DISPOSAL
REF	DEDICATED RECEPTACLE FOR REFRIGERATOR

ROOM CONTROLLERS / POWER PACKS

- P XX — SPECIALTY POWER PACK WITH DESIGNATION "XX", REFER TO ABBREVIATION LEGEND BELOW.
- R XX — SPECIALTY ROOM CONTROLLER WITH DESIGNATION "XX", REFER TO ABBREVIATION LEGEND BELOW.

WA	WATTSTOPPER LRMC-100: SINGLE RELAY ROOM CONTROLLER

ABBREVIATION OR SYMBOL / DESCRIPTION

SWITCHES

- S — SINGLE POLE LIGHT SWITCH
- S_M — PADLOCKABLE HP RATED SWITCH
- S_X — SPECIALTY SWITCH. FOR "X" DESIGNATION, SEE LIGHTING SWITCH ABBREVIATION SCHEDULE BELOW.
- S_3 — 3-WAY SWITCH
- S_{WA} — WATTSTOPPER LMSW-101 SINGLE BUTTON DIGITAL SWITCH
- S_{WJ} — WATTSTOPPER PW-101: PASSIVE INFRARED WALL OCCUPANCY SENSOR SWITCH

COMMON ABBREVIATIONS

A	AMP
AFF	ABOVE FINISHED FLOOR
AIC	AMPS INTERRUPTING CAPACITY
AUX	AUXILIARY
BKR	BREAKER
C	CONDUIT
CBA	COLOR BY ARCHITECT
CGRS	PVC COATED GALVANIZED RIGID STEEL
CKT	CIRCUIT
CP	CONTROL PANEL
CPT	CONTROL POWER TRANSFORMER
EC	EMPTY OR EMBEDDED CONDUIT
EF	EXHAUST FAN
EG	EQUIPMENT GROUND
EL	ELEVATION
EMT	ELECTRICAL METALLIC TUBING
EWC	ELECTRIC WATER COOLER
FA	FIRE ALARM
FACP	FIRE ALARM CONTROL PANEL
FC	FAN COIL
FLR	FLOOR
FOC	FIBER OPTIC CABLE
FT	FEET
GFCI	GROUND FAULT CIRCUIT INTERRUPTER
GND	GROUND
GRS	GALVANIZED RIGID STEEL
HOA	HAND-OFF-AUTO
HP	HORSEPOWER OR HEAT PUMP
JB	JUNCTION BOX
kVA	KILOVOLT-AMPERE
kVAR	KILOVOLT-AMPERE, REACTIVE
kW	KILOWATT
L.O.	LUGS ONLY
LSIG	ADJUSTABLE TRIP UNIT WITH LONG TIME, SHORT TIME, INSTANTANEOUS, AND GROUND FAULT SETTINGS
LV	LOW VOLTAGE
MCB	MAIN CIRCUIT BREAKER
MCC	MOTOR CONTROL CENTER
MCP	MOTOR CIRCUIT PROTECTOR
MFR	MANUFACTURER
MIN	MINIMUM
MLO	MAIN LUG ONLY
MTD	MOUNTED
NFDS	NON-FUSED DISCONNECT SWITCH
NTS	NOT TO SCALE
OC	ON CENTER
OH	OVERHEAD
OL	OVERLOAD
PEC	PHOTO ELECTRIC CELL
PL	PILOT LIGHT
PNL	PANEL
PVC	SCHEDULE 40 POLYVINYL CONDUIT
RA	FIRE ALARM REMOTE ANNUNCIATOR
RECPT	RECEPTACLE
RM	ROOM
SE	SERVICE ENTRANCE
SHT	SHEET
SN	SOLID NEUTRAL
SPD	SURGE PROTECTIVE DEVICE
SW	SWITCH
TEL	TELEPHONE
TYP	TYPICAL
TC	TIME CLOCK
UG	UNDER GROUND
UH	UNIT HEATER
VA	VOLT-AMP
VFD	VARIABLE FREQUENCY DRIVE
W	WATT OR WIRE
WH	WATER HEATER
WM	WATT METER
WP	WEATHERPROOF
XMFR	TRANSFORMER

ABBREVIATION OR SYMBOL / DESCRIPTION

SENSORS

- XX — SPECIALTY CEILING MOUNT SENSOR WITH DESIGNATION "XX", REFER TO ABBREVIATION LEGEND BELOW.
- XX — SPECIALTY CORNER MOUNT SENSOR WITH DESIGNATION "XX", REFER TO ABBREVIATION LEGEND BELOW.

WD	WATTSTOPPER LMDC-100: DIGITAL DUAL TECHNOLOGY CEILING MOUNT

COMMUNICATIONS DEVICES

- I — INTERCOM STATION
- I_M — MASTER INTERCOM STATION
- C — CLOCK
- C_D — CLOCK, DUAL SIDED
- C_{WG} — CLOCK, WITH WIREGUARD
- H — HORN SPEAKER
- H_{WP} — HORN SPEAKER - WEATHERPROOF
- P — PAGING SPEAKER
- C — CAMERA WITH PAN, TILT, & ZOOM
- C_{WP} — CAMERA - WEATHERPROOF WITH PAN, TILT, & ZOOM
- J_V J_A — SPECIAL SYSTEMS JUNCTION BOX ABOVE CEILING. ROUTE 1" C WITH PULL STRING TO DATA/ELECTRICAL ROOM. (V) VIDEO, (A) ALARM/ACCESS
- A — ACCESS CONTROL - PROVIDE ACCESS CONTROL ROUGH-IN AT DOOR. REFER TO DETAILS FOR ACCESS CONTROL ROUGH-IN REQUIREMENTS.
- D — MAGNETIC DOOR HOLDER
- F — FIRE ALARM PULL STATION
- F — FIRE ALARM COMBINATION HORN/STROBE DEVICE
- S — FIRE ALARM COMBINATION SPEAKER/STROBE DEVICE
- F — FIRE ALARM STROBE DEVICE
- Z Z_C Z_M — FIRE ALARM ZAM DEVICE; IAM (I), CONTROL (C), OR MONITOR MODULE (M)
- S — SMOKE DETECTOR
- H — HEAT DETECTOR
- S_D — DUCT SMOKE DETECTOR
- S_{DA} — DUCT SMOKE DETECTOR WITH AUXILIARY CONTACTS
- TS FS — TAMPER SWITCH / FLOW SWITCH
- ATS — SERVICE ENTRANCE RATED AUTOMATIC TRANSFER SWITCH
- M — MANHOLE, HANDHOLE DESIGNATION REFER TO SCHEDULE.

GENERAL NOTES

1. SOME SYMBOLS OR ABBREVIATIONS MAY APPEAR ON THIS SHEET AND NOT BE UTILIZED ON THE PROJECTS.

WIRE TYPES

- LIGHTING CONTROL CABLING

EQUIPMENT AND CONDUIT LINE TYPES

- FURNISH + INSTALL NEW
- EXISTING
- DEMOLISH
- UNDERGROUND CONNECT TO EXISTING

2 (3#8 + 1#8 + 1#10EG) 3/4" GRS

- CONDUIT TYPE (SEE ABBREVIATIONS) REFER TO SPECIFICATIONS IF NOT SHOWN
- CONDUIT SIZE
- GROUNDED (NEUTRAL) CONDUCTOR, NUMBER AND SIZE
- GROUNDED (NEUTRAL) CONDUCTOR, NUMBER AND SIZE
- PHASE (HOT) CONDUCTOR, NUMBER & SIZE
- NUMBER OF SETS

XX - ## — HOME RUN TO PANEL. LETTER(S) INDICATE NAME OF PANEL, NUMBER(S) INDICATE CIRCUIT NUMBERS.

ONE LINE SYMBOLS

- * — CIRCUIT BREAKER, TRIP RATING SHOWN, 3-POLE UNLESS NOTED.
- * — FUSE, CURRENT LIMITING, RATING AS SHOWN.
- 480V / ** kVA / 208V — TRANSFORMER, RATINGS AS SHOWN.
- M 10 HP — ELECTRIC MOTOR, HORSEPOWER SHOWN.
- * — MOTOR STARTER, SIZE AS SHOWN OR REQUIRED. FVNR UNLESS NOTED.
- SPD — SURGE PROTECTION DEVICE.
- G *KW — GENERATOR
- GROUNDING ROD, 3/4" x 10' MINIMUM, COPPER CLAD.
- VARIABLE FREQUENCY DRIVE.
- ATS-1 200A / 3P /BP — AUTOMATIC TRANSFER SWITCH

WALL ENGINEERING
PO BOX 1457, DURANT, OK 74702
OKLAHOMA CA #5413 EXP. JUNE 30, 2023

SUBMITTAL / REVISIONS:

	DATE	BY	SUBMITTAL / REVISION

SHAWNEE MUNICIPAL AUTHORITY
WASTEWATER SYSTEM IMPROVEMENTS
SHAWNEE, OKLAHOMA

ELECTRICAL LEGEND

PROJECT NO. SHN-20-01
DATE 06/22
DRAWN BY: CD
CHECKED BY: BB
REVIEWED BY: BB
SCALE: AS SHOWN

BAR IS ONE INCH ON ORIGINAL DRAWING
0" 1"
IF NOT ONE INCH ON THIS SHEET, ADJUST SCALES ACCORDINGLY

SHEET E1

REGISTERED PROFESSIONAL ENGINEER — BRUCE W. BROWN — 20995 — OKLAHOMA — 06-01-2022

BROWN ENGINEERS
501-448-0100

P:\PRODUCTION\PROJECTS\WALL ENGINEERING (WE)\WE-055 SHAWNEE NORTHSIDE WASTEWATER TREATMENT PLANT\DWG\E1.DWG
7/19/2022 2:53 PM

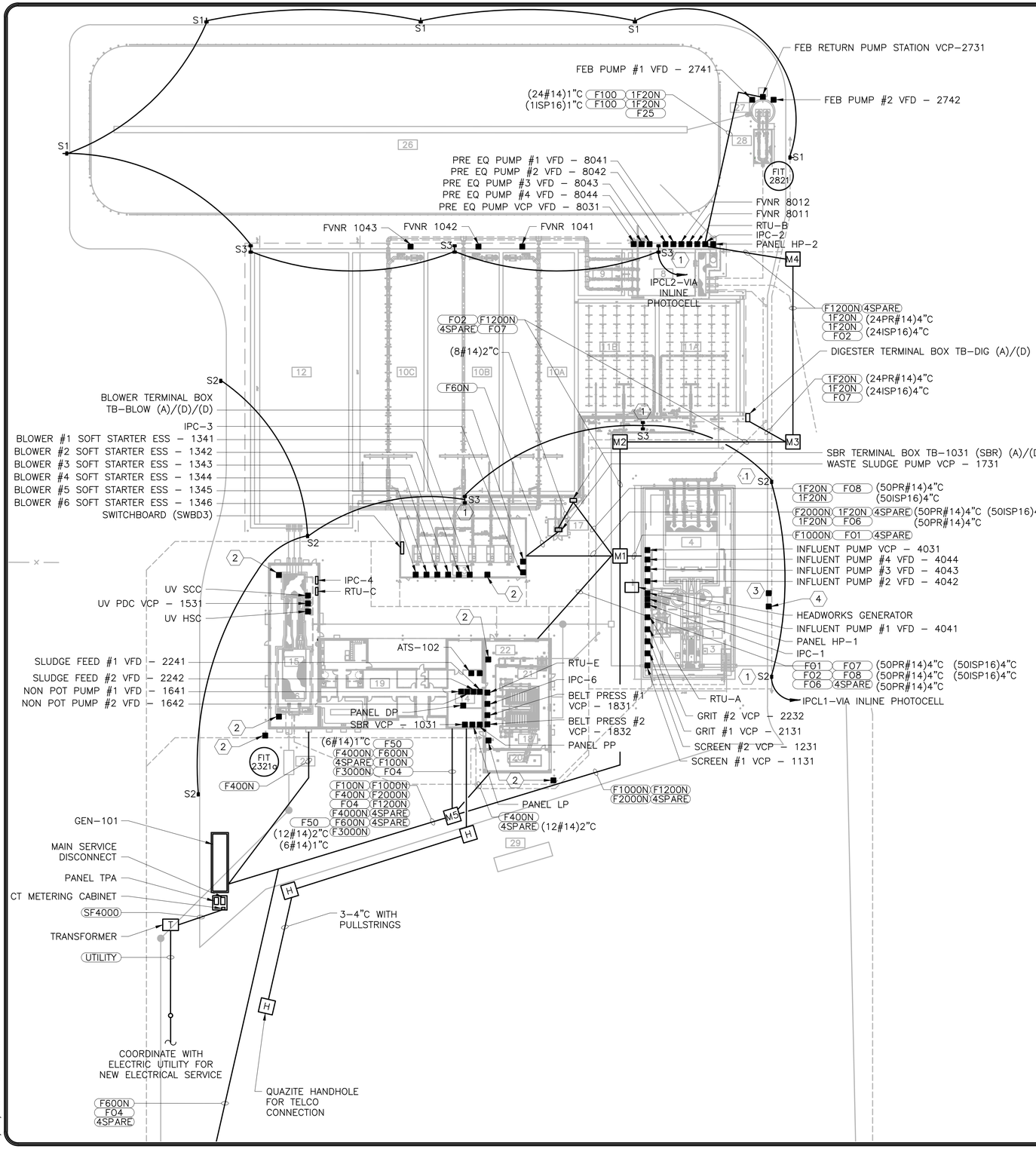

MANUFACTURER–DESIGNED EQUIPMENT SYSTEM NOTES:

1. THIS PROJECT INCLUDES THE CONSTRUCTION OF MANUFACTURER–DESIGNED EQUIPMENT SYSTEMS.
2. POWER, SIGNAL AND CONTROL CIRCUITS ARE SHOWN ON THESE DRAWINGS BASED ON SIMILAR MANUFACTURER–DESIGNED EQUIPMENT SYSTEMS.
3. THE FINAL POWER, SIGNAL AND CONTROL CIRCUIT REQUIREMENTS SHALL BE DETERMINED BY THE APPROVED MANUFACTURER.
4. DRAWINGS, SPECIFICATIONS, INSTALLATION MANUALS, AND OTHER REQUIRED DOCUMENTATION SHALL BE PROVIDED BY THE APPROVED MANUFACTURERS AND MAY INCLUDE ADDITIONAL AND/OR ALTERED REQUIREMENTS THAN SHOWN ON THESE DRAWINGS.
5. THE CONTRACTOR SHALL COORDINATE WITH THOSE APPROVED SUBMITTAL DRAWINGS AND PROVIDE ALL REQUIRED LABOR AND MATERIALS NECESSARY FOR A COMPLETE AND ACCEPTED SYSTEM AT NO ADDITIONAL COST TO THE OWNER.

KEYED NOTES:

1. CCTV LOCATION POLE MOUNT. ROUTE (3#12)3/4"C TO 120 VOLT PANEL SCHEDULES.
2. CCTV LOCATION BUILDING MOUNT
3. FURNISH AND INSTALL CIRCUIT 1F20N FROM PANEL IPCL1 TO MAG METER IN VAULT. CONNECT TO 20A/1P CIRCUIT BREAKER. FURNISH AND INSTALL (1ISP16)1"C FROM MAG METER TO PANEL RTU–A.
4. FURNISH AND INSTALL CIRCUIT F20 FROM PANEL HP–1 TO ACTUATED VALVE. CONNECT TO 20A/3P CIRCUIT BREAKER. FURNISH AND INSTALL (8#14)1"C AND (2ISP16)1"C TO PANEL RTU–A.

CABLE LEGEND:

- UTILITY — 3(EMPTY)5"C
- FO* — (12STRAND FIBER OPTIC)2"C
- 4SPARE — 4–SPARE 4"C

GENERAL NOTE:

1. REFER TO CIVIL DRAWING C–8 FOR FINAL LOCATION OF 15KW GENERATOR AT HEADWORKS.

WALL ENGINEERING
PO BOX 1457, DURANT, OK 74702
OKLAHOMA CA #5413 EXP. JUNE 30, 2023

SUBMITTAL / REVISIONS:

DATE	BY	SUBMITTAL / REVISION
. . . . .	. .	. . . . .

SHAWNEE MUNICIPAL AUTHORITY
WASTEWATER SYSTEM IMPROVEMENTS
SHAWNEE, OKLAHOMA

ELECTRICAL SITE PLAN

PROJECT NO.	SHN–20–01
DATE	06/22
DRAWN BY:	CD
CHECKED BY:	BB
REVIEWED BY:	BB
SCALE:	AS SHOWN

BAR IS ONE INCH ON ORIGINAL DRAWING
0" 1"
IF NOT ONE INCH ON THIS SHEET, ADJUST SCALES ACCORDINGLY

SHEET

EA1

REGISTERED PROFESSIONAL ENGINEER
BRUCE W. BROWN
20995
OKLAHOMA
BROWN ENGINEERS
501-448-0100

P:\PRODUCTION\PROJECTS\WALL ENGINEERING (WE)\WE–055 SHAWNEE NORTHSIDE WASTEWATER TREATMENT PLANT\DWG\EA1.DWG
7/19/2022 3:40 PM

P:\PRODUCTION\PROJECTS\WALL ENGINEERING (WE)\WE-055 SHAWNEE NORTHSIDE WASTEWATER TREATMENT PLANT\DWG\EL1.DWG
7/19/2022 2:45 PM

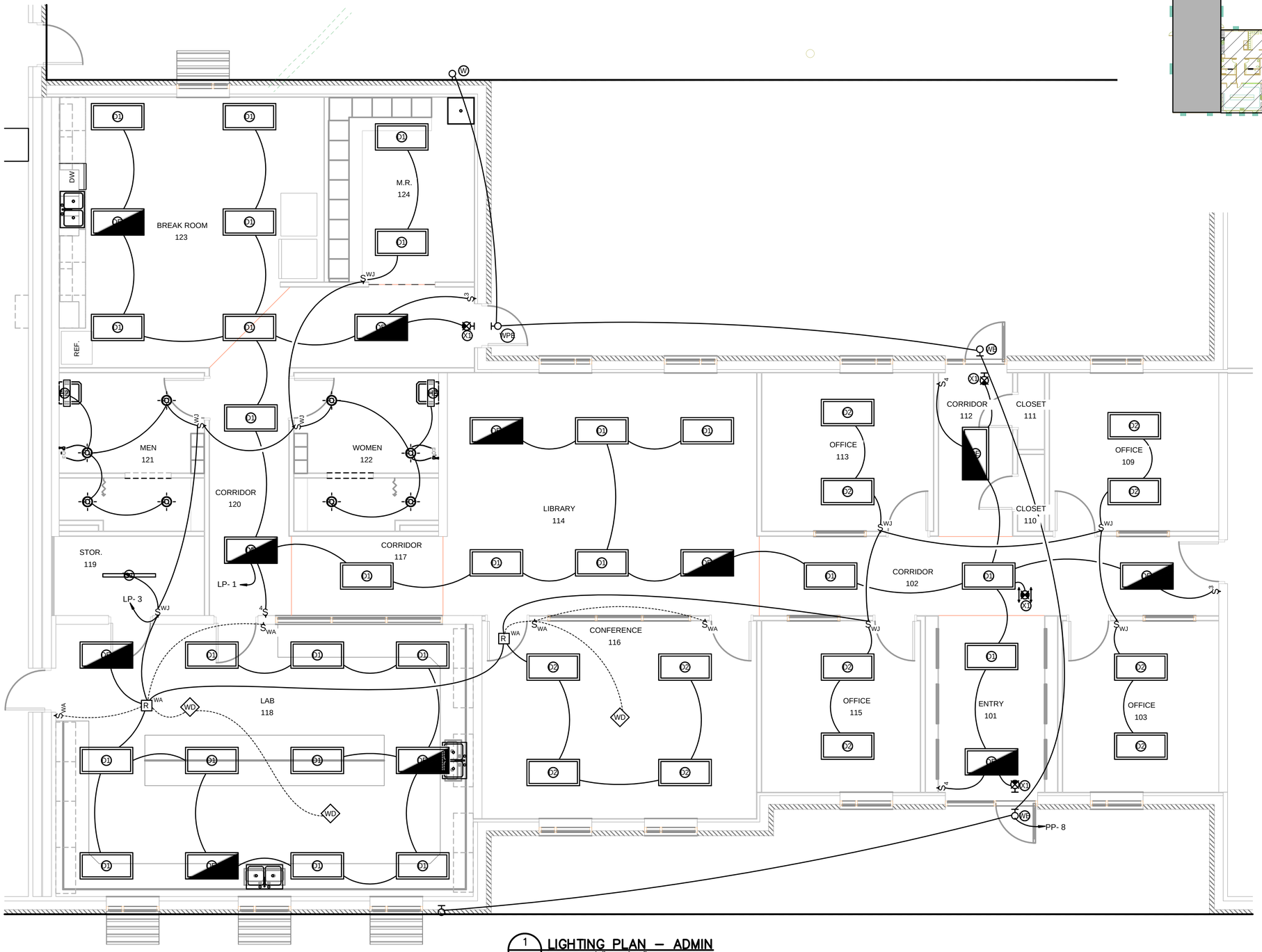

1 LIGHTING PLAN – ADMIN
SCALE: 1/4" = 1'-0"

WALL ENGINEERING
PO BOX 1457, DURANT, OK 74702
OKLAHOMA CA #5413 EXP. JUNE 30, 2023

SUBMITTAL / REVISIONS:

DATE	BY	SUBMITTAL / REVISION
.	.	.
.	.	.
.	.	.
.	.	.
.	.	.
.	.	.
.	.	.

SHAWNEE MUNICIPAL AUTHORITY
WASTEWATER SYSTEM IMPROVEMENTS
SHAWNEE, OKLAHOMA

ELECTRICAL
LIGHTING PLAN – ADMIN

PROJECT NO.
SHN-20-01
DATE
06/22
DRAWN BY:
CD
CHECKED BY:
BB
REVIEWED BY:
BB
SCALE:
AS SHOWN

BAR IS ONE INCH ON ORIGINAL DRAWING
0" 1"
IF NOT ONE INCH ON THIS SHEET, ADJUST SCALES ACCORDINGLY

SHEET
EL1

REGISTERED PROFESSIONAL ENGINEER
BRUCE BROWN
20995
OKLAHOMA
06-01-2022

BROWN ENGINEERS
501-448-0100

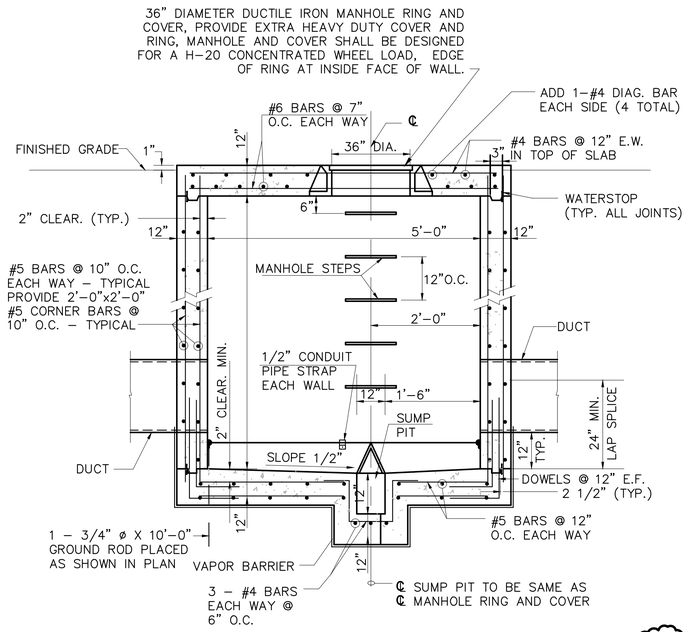

1 — **PREFABRICATED CONCRETE PULL BOX - PLAN SYMBOL** M
SCALE: NONE

MANHOLE NOTES:

1. SUBMIT LAYOUT OF EACH MANHOLE FOR APPROVAL BY ENGINEER, INDICATING DUCT, CONDUIT AND SPARE STUBOUTS. MANHOLE INTERIOR DIMENSION SIZE SHALL BE AS DETAILED.
2. EXACT LOCATION FOR EACH MANHOLE SHALL BE
3. APPROVED BY THE ENGINEER/OWNER.
4. CABLE BRACKETS SHALL BE A BRACED CHANNEL STRUT WITH INSULATED CABLE CLAMPS.
5. INSTALL CABLE BRACKETS AND PULLING IRONS IN EACH FACE.
6. PROVIDE WATER STOPS AT ALL JOINTS; SPLICE WHERE REQUIRED.
7. PROVIDE 0.006" PLASTIC MEMBRANE VAPOR BARRIER AT BOTTOM; PROVIDE 2 COATS WATERPROOF COATING COLD METHOD. ALLOW TO DRY 24 HOURS BETWEEN EACH COAT AND BACKFILLING.
8. COLOR CODE, TAG, AND IDENTIFY ALL CABLES IN MANHOLE.
9. PROVIDE MINIMUM 5' SLACK CABLE LOOP FOR EACH CABLE.
10. PROVIDE 3' MINIMUM CONDUIT PER CAPPED STUBOUT. PROVIDE CONDUIT BUSHINGS AND WATERTIGHT SEALS FOR
11. ALL DIRECET BURIED CABLES AND COUNTERPOISE ENTERING THE MANHOLE VIA A CONDUIT STUBOUT. PROVIDE SLEEVES FOR 8 WAY EXITS AT MANHOLES.
12. SLEEVES AND STUBOUTS SHALL BE CAPPED WATERTIGHT. BOND AND GROUND COVER AND FRAME TO GROUND ROD
13. USING BRAIDED COPPER GROUND STRAP EQUIVALENT TO #6 AWG COPPER WIRE.

TRANSFORMER PAD KEYED NOTES:

1. INSTALL NEW COPPER CLAD GROUND ROD, 3/4" x 10"-0", TYPICAL OF 4.
2. INSTALL NEW #2/0 BARE COPPER CONDUCTOR (TYPICAL).
3. INSTALL NEW #2 BARE COPPER CONDUCTOR.
4. INSTALL NEW EXOTHERMIC WELD, TYPICAL OF 5.
5. INSTALL NEW SECONDARY CONDUITS, SEE SITE PLAN.
6. INSTALL NEW PRIMARY CONDUITS, SEE SITE PLAN.
7. INSTALL NEW #4 REBAR, 12"O.C. BOTH WAYS.
8. CONSTRUCT NEW PAD USING CONCRETE, 3500 PSI AT 28 DAYS.
9. INSTALL NEW 1" GRSC UNDER PAD FOR GROUND WIRES (TYPICAL).
10. UTILIZE LONG SWEEP 90° BEND PVC CONDUITS ON PRIMARY CONDUITS.
11. UTILIZE LONG SWEEP 90° BEND CONDUITS ON SECONDARY CONDUITS.

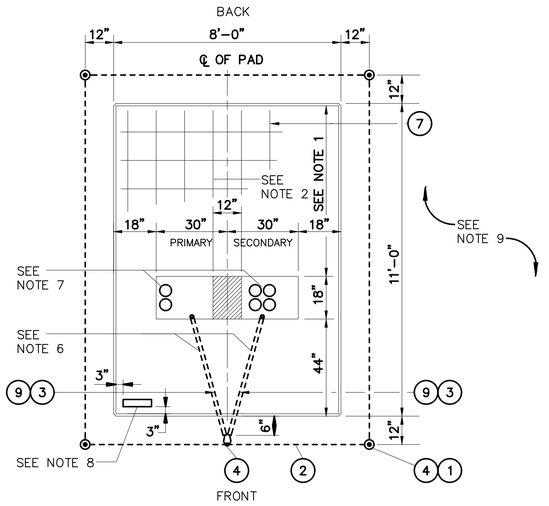

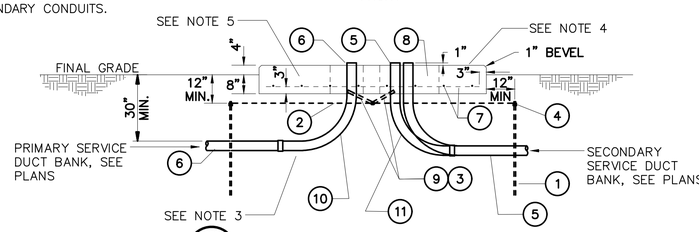

2 — **TRANSFORMER PAD DETAIL**
SCALE: NONE

TRANSFORMER PAD NOTES:

1. WHERE POSSIBLE. DO NOT PLACE CONDUIT UNDER THIS SECTION OF FOUNDATION.
2. REINFORCING - #4 BARS 12" O.C. BOTH WAYS.
3. WHEN INSTALLING CONDUIT, DISTURB GROUND IN FOUNDATION AREA AS LITTLE AS POSSIBLE. EXTEND CONDUIT 1" ABOVE FOUNDATION.
4. TOP OF FOUNDATION TO BE SMOOTH AND LEVEL. FINAL GRADE SHALL SLOPE AWAY FROM PAD.
5. CONCRETE SHALL BE 3500 PSI AT 28 DAYS AND 1:2:4 MIXTURE WITH 6 GAL. MAX. WATER CONTENT PER SACK OF CEMENT.
6. CONTRACTOR TO FURNISH 1" CONDUIT UNDER PAD FOR GROUND WIRE.
7. LOCATE CONDUITS UNDER PRIMARY AND SECONDARY BUSHINGS.
8. TRANSFORMER LOCATION TAG SHALL BE ATTACHED TO PAD WITH CONCRETE NAILS OR SHEET METAL SCREWS.
9. TRANSFORMER PAD REQUIRES A MINIMUM 3'-0" CLEARANCE AROUND EACH SIDE AND BACK OF PAD. A 15'-0" CLEARANCE IS REQUIRED ON FRONT SIDE OF PAD.

ELECTRICAL DUCT NOTES:

1. CONTRACTOR SHALL STAKE THE DUCT INSTALLATION IN PLAN AND ELEVATION FOR NEW ELECTRICAL DUCTS TO AVOID EXISTING UTILITIES.
2. CONTRACTOR SHALL ADJUST THE DEPTH OF THE ELECTRICAL DUCTS AS REQUIRED TO MAINTAIN THE MINIMUM COVER REQUIREMENT INDICATED AND AVOID EXISTING UTILITIES.
3. SIMILAR CONSTRUCTION FOR OTHER DUCT SIZES. SEE DUCT BANK SCHEDULE FOR QUANTITY AND SIZES.
4. INSTALL DUCT CONDUIT SUPPORTS AT 5'-0" O.C. MAXIMUM SPACING (TYPICAL ALL DUCTS).
5. OFFSETS AND BENDS OVER 10 DEGREES AND ELBOWS IN PVC CONDUIT RUNS SHALL BE PVC COATED GALVANIZED RIGID STEEL CONDUIT.
6. NO PVC SHALL EMERGE FROM THE GROUND OR CONCRETE SLAB OR ENCASEMENT, PVC SHALL CONVERT TO PVC COATED GALVANIZED RIGID STEEL CONDUIT PRIOR TO ITS EMERGENCE.
7. INSTALL GROUND RODS AT ENDS OF ELECTRICAL DUCT OR CONNECT TO GROUND RING.
8. INSTALL CONDUCTORS AND CABLES AS NOTED ON DRAWING. INSTALL PULLWIRE IN ALL SPARE DUCTS.
9. MINIMUM COVER REQUIREMENT FOR DUCT BANKS UNDER ROADS, DRIVEWAYS AND PARKING LOTS SHALL BE 24".
10. MINIMUM COVER REQUIREMENTS FOR ELECTRICAL SECONDARY SERVICE DUCT BANKS SHALL BE 30".
11. MINIMUM COVER REQUIREMENTS FOR ELECTRICAL PRIMARY SERVICE DUCT BANKS SHALL BE 36".

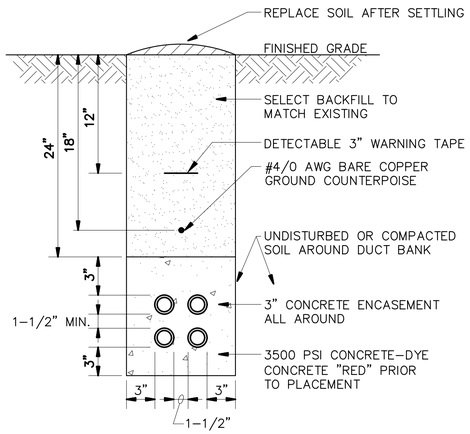

4 — **CONCRETE ENCASED ELECTRICAL DUCT**
SCALE: NONE

WALL ENGINEERING
PO BOX 1457, DURANT, OK 74702
OKLAHOMA CA #5413 EXP. JUNE 30, 2023

SUBMITTAL / REVISIONS:	BY	SUBMITTAL / REVISION
DATE		

SHAWNEE MUNICIPAL AUTHORITY
WASTEWATER SYSTEM IMPROVEMENTS
SHAWNEE, OKLAHOMA

ELECTRICAL DETAILS

PROJECT NO.	SHN-20-01
DATE	06/22
DRAWN BY:	CD
CHECKED BY:	BB
REVIEWED BY:	BB
SCALE:	AS SHOWN

BAR IS ONE INCH ON ORIGINAL DRAWING
0" 1"
IF NOT ONE INCH ON THIS SHEET, ADJUST SCALES ACCORDINGLY

SHEET
EN5

REGISTERED PROFESSIONAL ENGINEER
BRUCE W. BROWN
20995
OKLAHOMA
6-01-2022
BROWN ENGINEERS
501-448-0100

P:\PRODUCTION\PROJECTS\WALL ENGINEERING (WE)\WE-055 SHAWNEE NORTHSIDE WASTEWATER TREATMENT PLANT\DWG\EN5.DWG
7/19/2022 2:45 PM

Branch Panel: HP2

Location:
Supply From: DP1
Mounting: Surface
Enclosure: NEMA 3R

Volts: 480/277 Wye
Phases: 3
Wires: 4

A.I.C. Rating: 100,000
Panel Rating: 1,200 A MLO

Notes:

CKT	Load Name	Trip	Poles	A	B	C	A	B	C	Poles	Trip	Load Name	CKT
1				14.56			14.41						2
3	IPCH2	400 A	3		12.52			14.41		3	110 A	VFD-8044	4
5						11.42			14.41				6
7				14.41			14.41						8
9	VFD-8043	110 A	3		14.41			14.41		3	110 A	VFD-8042	10
11						14.41			14.41				12
13				14.41			11.09						14
15	VFD-8041	110 A	3		14.41			11.09		3	80 A	VFD-2741	16
17						14.41			11.09				18
19				11.09			3.88						20
21	VFD-2742	80 A	3		11.09			3.88		3	25 A	MTR-2743	22
23						11.09			3.88				24
25				2.49			2.49						26
27	FVNR-8012	25 A	3		2.49			2.49		3	25 A	FVNR-8011	28
29						2.49			2.49				30
31				26.60			26.60						32
33	FVNR-1043	225 A	3		26.60			26.60		3	225 A	FVNR-1042	34
35						26.60			26.60				36
37				26.60			0.58						38
39	FVNR-1041	225 A	3		26.60			0.58		3	15 A	FCV-1017	40
41						26.60			0.58				42
43				0.58			0.00						44
45	FCV-1014	15 A	3		0.58			0.00		3	25 A	HOIST	46
47						0.58			0.00				48
49				3.88			0.00						50
51	BRIDGE CRANE	25 A	3		3.88			0.00		3	25 A	HOIST	52
53						3.88			0.00				54

Panel Totals

	PHASE A	PHASE B	PHASE C
Total Load:	188.09 kVA	186.05 kVA	184.95 kVA
Total Amps:	680 A	672 A	668 A
Total Conn. Load:	559.10 kVA		
Total Design Current:	1,052 A		

Notes:

Branch Panel: IPCH2

Location:
Supply From: HP2
Mounting: Surface
Enclosure: NEMA 3R

Volts: 480/277 Wye
Phases: 3
Wires: 4

A.I.C. Rating: 100,000
Panel Rating: 400 A MLO

Notes:

CKT	Load Name	Trip	Poles	A	B	C	A	B	C	Poles	Trip	Load Name	CKT
1				4.64			0.58						2
3	IPCT2	35 A	2		2.60			0.58		3	15 A	FCV-9014	4
5	SITE LIGHTING	20 A	1			1.50			0.58				6
7				0.58			0.58						8
9	FCV-9013	15 A	3		0.58			0.58		3	15 A	FCV-9012	10
11						0.58			0.58				12
13				0.58			0.58						14
15	FCV-9011	15 A	3		0.58			0.58		3	15 A	FCV-8051	16
17						0.58			0.58				18
19				0.58			0.58						20
21	FCV-8052	15 A	3		0.58			0.58		3	15 A	FCV-1019	22
23						0.58			0.58				24
25				0.58			0.58						26
27	FCV-1018	15 A	3		0.58			0.58		3	15 A	FCV-1015	28
29						0.58			0.58				30
31				0.58			0.58						32
33	FCV-1012	15 A	3		0.58			0.58		3	15 A	FCV-1013	34
35						0.58			0.58				36
37				0.58			0.58						38
39	FCV-1016	15 A	3		0.58			0.58		3	15 A	FCV-1103	40
41						0.58			0.58				42
43				0.58			0.58						44
45	FCV-1104	15 A	3		0.58			0.58		3	15 A	FCV-1102	46
47						0.58			0.58				48
49				0.58			0.58						50
51	FCV-1101	15 A	3		0.58			0.58		3	15 A	FCV-1011	52
53						0.58			0.58				54

Panel Totals

	PHASE A	PHASE B	PHASE C
Total Load:	14.56 kVA	12.52 kVA	11.42 kVA
Total Amps:	53 A	46 A	41 A
Total Conn. Load:	38.49 kVA		
Total Design Current:	73 A		

Notes:

Branch Panel: IPCL2

Location:
Supply From: IPC2T
Mounting: Surface
Enclosure: NEMA 3R

Volts: 120/240 Single
Phases: 1
Wires: 3

A.I.C. Rating: 10kA
Panel Rating: 80 A MCB

Notes:

CKT	Load Name	Trip	Poles	A	B	A	B	Poles	Trip	Load Name	CKT
1	FIT-9024	20 A	1	0.05		0.54		1	20 A	RECEPTACLES	2
3	FIT 9021	20 A	1		0.05		0.05	1	20 A	LIT-2731B	4
5	LIT-8031A	20 A	1	0.05		0.05		1	20 A	FIT-2821	6
7	RTU-B	20 A	1		1.50		0.10	1	20 A	CAMERAS	8
9	FIT 9023	20 A	1	0.05		0.10		1	20 A	CAMERAS	10
11	FIT 9022	20 A	1		0.05		0.50	1	20 A	TB-DIG (A)	12
13	VCP-8031	20 A	1	1.50		0.50		1	20 A	TB-DIG (D)	14
15	LIT-1073	20 A	1		0.05		0.00	1	20 A	SPARE	16
17	AIT-1085	20 A	1	0.05		0.00		1	20 A	SPARE	18
19	AIT-1086	20 A	1		0.05		0.00	1	20 A	SPARE	20
21	LIT-1072	20 A	1	0.05		0.00		1	20 A	SPARE	22
23	AIT-1083	20 A	1		0.05		0.00	1	20 A	SPARE	24
25	AIT-1084	20 A	1	0.05		0.00		1	20 A	SPARE	26
27	LIT-1071	20 A	1		0.05		0.00	1	20 A	SPARE	28
29	AIT-1081	20 A	1	0.05		0.00		1	20 A	SPARE	30
31	AIT-1082	20 A	1		0.05		0.00	1	20 A	SPARE	32
33	VCP-2731	20 A	1	1.50		0.00		1	20 A	SPARE	34
35	AIT-1183	20 A	1		0.05		0.00	1	20 A	SPARE	36
37	AIT-1184	20 A	1	0.05		0.00		1	20 A	SPARE	38
39	AIT-1181	20 A	1		0.05		0.00	1	20 A	SPARE	40
41	AIT-1182	20 A	1	0.05		0.00		1	20 A	SPARE	42

Panel Totals

	PHASE A	PHASE B
Total Load:	4.64 kVA	2.60 kVA
Total Amps:	38.67 A	21.67 A
Total Conn. Load:	7.24 kVA	
Total Design Current:	47 A	

Notes:

WALL ENGINEERING
PO BOX 1457, DURANT, OK 74702
OKLAHOMA CA #5413 EXP. JUNE 30, 2023

SUBMITTAL / REVISIONS:

DATE	BY	SUBMITTAL / REVISION
.	.	.

SHAWNEE MUNICIPAL AUTHORITY
WASTEWATER SYSTEM IMPROVEMENTS
SHAWNEE, OKLAHOMA

ELECTRICAL SCHEDULES

PROJECT NO.
SHN-20-01
DATE
06/22
DRAWN BY:
CD
CHECKED BY:
BB
REVIEWED BY:
BB
SCALE:
AS SHOWN

BAR IS ONE INCH ON ORIGINAL DRAWING
0" 1"
IF NOT ONE INCH ON THIS SHEET, ADJUST SCALES ACCORDINGLY

SHEET
EP4

BRUCE BROWN 20995 REGISTERED PROFESSIONAL ENGINEER OKLAHOMA
06-01-2022

BROWN ENGINEERS 501-448-0100

P:\PRODUCTION\PROJECTS\WALL ENGINEERING (WE)\WE-055 SHAWNEE NORTHSIDE WASTEWATER TREATMENT PLANT\DWG\EP4.DWG
7/19/2022 2:47 PM

CABLE SCHEDULE

EQTP	EQNO	VOLTAGE_RATING	AMP_POLE	LOAD/CIRCUIT	PWR_ROUTE_TO	ENCLOSURE_RATING	DESCRIPTION_1	DIGITAL_CABLE	ANALOG_CABLE	I&C_ROUTE_TO
CB	0000	480VAC-3P	20A/3P	F20	HP-1	–	–	–	–	–
UY	0000	480VAC-3P	20A/3P	F20	CB-0000	–	POWER MONITOR	2#14/THWN/1C	–	RTU-A
GEN	101	480VAC-3P	–	–	–	–	–	6#14/THWN/1C	–	RTU-E
CB	1011	480VAC-3P	15A/3P	1HP/F20	IPC-2	–	–	–	–	–
FCV	1011	480VAC-3P	15A/3P	1HP/F20	CB-1011	–	–	6#14/THWN/1C	2-1ISP16/P-OS/1C	TB-1031
CB	1012	480VAC-3P	15A/3P	1HP/F20	IPC-2	–	–	–	–	–
FCV	1012	480VAC-3P	15A/3P	1HP/F20	CB-1012	–	–	6#14/THWN/1C	2-1ISP16/P-OS/1C	TB-1031
CB	1013	480VAC-3P	15A/3P	1HP/F20	IPC-2	–	–	–	–	–
FCV	1013	480VAC-3P	15A/3P	1HP/F20	CB-1013	–	–	6#14/THWN/1C	2-1ISP16/P-OS/1C	TB-1031
CB	1014	480VAC-3P	15A/3P	1HP/F20	IPC-2	–	–	–	–	–
FCV	1014	480VAC-3P	15A/3P	1HP/F20	CB-1014	–	–	6#14/THWN/1C	2-1ISP16/P-OS/1C	TB-1031
CB	1015	480VAC-3P	15A/3P	1HP/F20	IPC-2	–	–	–	–	–
FCV	1015	480VAC-3P	15A/3P	1HP/F20	CB-1015	–	–	6#14/THWN/1C	2-1ISP16/P-OS/1C	TB-1031
CB	1016	480VAC-3P	15A/3P	1HP/F20	IPC-2	–	–	–	–	–
FCV	1016	480VAC-3P	15A/3P	1HP/F20	CB-1016	–	–	6#14/THWN/1C	2-1ISP16/P-OS/1C	TB-1031
CB	1017	480VAC-3P	15A/3P	1HP/F20	IPC-2	–	–	–	–	–
FCV	1017	480VAC-3P	15A/3P	1HP/F20	CB-1017	–	–	6#14/THWN/1C	2-1ISP16/P-OS/1C	TB-1031
CB	1018	480VAC-3P	15A/3P	1HP/F20	IPC-2	–	–	–	–	–
FCV	1018	480VAC-3P	15A/3P	1HP/F20	CB-1018	–	–	6#14/THWN/1C	2-1ISP16/P-OS/1C	TB-1031
CB	1019	480VAC-3P	15A/3P	1HP/F20	IPC-2	–	–	–	–	–
FCV	1019	480VAC-3P	15A/3P	1HP/F20	CB-1019	–	–	6#14/THWN/1C	2-1ISP16/P-OS/1C	TB-1031
ATS	102	480VAC-3P	–	–	–	–	–	6#14/THWN/1C	–	RTU-E
REFER TO TB	1031	–	–	–	–	–	–	–	–	–
REFER TO TB	1031	–	–	–	–	–	–	–	–	–
REFER TO VCP	1031	–	–	–	–	–	–	–	–	–
VCP	1031	120VAC-1P	–	1.5KVA/1F20N	CB-1031	–	–	–	–	–
TB	1031 SBR (A)	–	–	–	–	–	–	–	F08	NETWORK NW1
TB	1031 SBR (A)	120VAC-1P	20A/1P	50VA/1F20N	CB-1031(A)	NEMA 4X	–	–	50ISP16/SP-OS/4C	VCP-1031
TB	1031 SBR (D)	120VAC-1P	20A/1P	50VA/1F20N	CB-1031(D)	NEMA 4X	–	50PR#14/P-OS/4C	–	VCP-1031
CB	1031(A)	120VAC-1P	20A/1P	1.5KVA/1F20N	IPC-3	–	–	–	–	–
CB	1031(D)	120VAC-1P	20A/1P	1.5KVA/1F20N	IPC-3	–	–	–	–	–
CB	1041	480VAC-3P	225A/3P	60HP/F225	HP-2	–	–	–	–	–
FVNR	1041	480VAC-3P	NEMA SIZE 5	60HP/F225	CB-1041	NEMA 4X	–	6#14/THWN/1C	–	TB-1031
MTR	1041	480VAC-3P	–	60HP/VENDOR CABLE	FVNR-1041	–	–	–	–	–
CB	1042	480VAC-3P	225A/3P	60HP/F225	HP-2	–	–	–	–	–
FVNR	1042	480VAC-3P	NEMA SIZE 5	60HP/F225	CB-1042	NEMA 4X	–	6#14/THWN/1C	–	TB-1031
MS	1042	–	–	–	–	–			1ISP16/P-OS/1C	TB-1031
MS	1042	–	–	–	–	–			1ISP16/P-OS/1C	TB-1031
MTR	1042	480VAC-3P	–	60HP/VENDOR CABLE	FVNR-1042	–	–	–	–	–
TS	1042	–	–	–	–	–			1ISP16/P-OS/1C	TB-1031
TS	1042	–	–	–	–	–			1ISP16/P-OS/1C	TB-1031
CB	1043	480VAC-3P	225A/3P	60HP/F225	HP-2	–	–	–	–	–
FVNR	1043	480VAC-3P	NEMA SIZE 5	60HP/F225	CB-1043	NEMA 4X	–	6#14/THWN/1C	–	TB-1031
MS	1043	–	–	–	–	–			1ISP16/P-OS/1C	TB-1031
MTR	1043	480VAC-3P	–	60HP/VENDOR CABLE	FVNR-1043	–	–	–	–	–
TS	1043	–	–	–	–	–			1ISP16/P-OS/1C	TB-1031
LS	1061	–	–	–	–	–	HI LEVEL	2#14/THWN/1C	–	TB-1031
LS	1062	–	–	–	–	–	HI LEVEL	2#14/THWN/1C	–	TB-1031
LS	1063	–	–	–	–	–	HI LEVEL	2#14/THWN/1C	–	TB-1031
CB	1071	120VAC-1P	20A/1P	1.5KVA/1F20N	IPC-2	–	–	–	–	–
LIT	1071	120VAC-1P	20A/1P	50VA/1F20N	CB-1071	–	–	–	1ISP16/P-OS/1C	TB-1031
CB	1072	120VAC-1P	20A/1P	1.5KVA/1F20N	IPC-2	–	–	–	–	–
LIT	1072	120VAC-1P	20A/1P	50VA/1F20N	CB-1072	–	–	–	1ISP16/P-OS/1C	TB-1031
CB	1073	120VAC-1P	20A/1P	50VA/1F20N	IPC-2	–	–	–	–	–
LIT	1073	120VAC-1P	20A/1P	50VA/1F20N	CB-1073	–	–	–	1ISP16/P-OS/1C	TB-1031
AIT	1081	120VAC-1P	20A/1P	50VA/1F20N	CB-1081	–	DO	–	1ISP16/P-OS/1C	TB-1031
CB	1081	120VAC-1P	20A/1P	1.5KVA/1F20N	IPC-2	–	–	–	–	–
AIT	1082	120VAC-1P	20A/1P	50VA/1F20N	CB-1082	–	TSS	–	1ISP16/P-OS/1C	TB-1031
CB	1082	120VAC-1P	20A/1P	1.5KVA/1F20N	IPC-2	–	–	–	–	–
AIT	1083	120VAC-1P	20A/1P	50VA/1F20N	CB-1083	–	DO	–	1ISP16/P-OS/1C	TB-1031

CABLE SCHEDULE NOTES:

1. INSTRUMENT DEVICE SCHEDULE SHOWN ABOVE SPECIFIES THE REQUIRED CIRCUITS AND CIRCUIT ROUTING FOR EACH DEVICE.
2. FURNISH AND INSTALL ANALOG CABLING FROM LOCATION INDICATED IN COLUMN "ANALOG_CABLE" TO LOCATION SHOWN IN COLUMN "I&C_ROUTE_TO".
3. FURNISH AND INSTALL DIGITAL CABLING FROM LOCATION INDICATED IN COLUMN "DIGITAL_CABLE" TO LOCATION SHOWN IN COLUMN "I&C_ROUTE_TO".
4. FURNISH AND INSTALL POWER CABLING FROM DEVICE TO LOCATION SHOWN IN COLUMN "PWR_ROUTE_TO".
5. SIZE POWER CIRCUIT AS REQUIRED OR AS INDICATED IN COLUMN "LOAD/CIRCUIT".
6. REFER TO PLAN SHEETS FOR OTHER CIRCUIT REQUIREMENTS.
7. SUBSCRIPT "a" ON PLAN SHEET CABLE CALL OUT INDICATES THE ANALOG CIRCUIT.
8. SUBSCRIPT "d" ON PLAN SHEET CABLE CALL OUT INDICATES THE DIGITAL CIRCUIT.
9. SUBSCRIPT "p" ON PLAN SHEET CABLE CALL OUT INDICATES THE POWER CIRCUIT.
10. CABLE TYPE "ISP16/P-OS" IS DEFINED AS EQUAL TO OKONITE OKOSEAL-N TYPE P-OS, TC, 600V, 16 AWG, SINGLE PAIR INSTRUMENTATION CABLE WITH OVERALL SHIELD.
11. CABLE TYPE "**-ISP16/SP-OS" IS DEFINED AS EQUAL TO OKONITE OKOSEAL-N TYPE SP-OS, TC, 600V, 16 AWG, **PAIRS, MULTIPLE SHIELDED PAIR INSTRUMENTATION CABLE WITH OVERALL SHIELD.
12. CABLE TYPE "**PR#14/P-OS" IS DEFINED AS EQUAL TO OKONITE OKOSEAL-N TYPE P-OS, TC, 600V, 14 AWG, **PAIRS, MULTIPLE SHIELDED PAIR INSTRUMENTATION CABLE WITH OVERALL SHIELD.
13. CABLE TYPE "THWN" IS DEFINED AS INDIVIDUAL #14 AWG THWN CONDUCTORS.

WALL ENGINEERING
PO BOX 1457, DURANT, OK 74702
OKLAHOMA CA #5413 EXP. JUNE 30, 2023

SUBMITTAL / REVISIONS:

DATE	BY	SUBMITTAL / REVISION
. .	. .	. . . . .

SHAWNEE MUNICIPAL AUTHORITY
WASTEWATER SYSTEM IMPROVEMENTS
SHAWNEE, OKLAHOMA

ELECTRICAL CABLE SCHEDULE

PROJECT NO.
SHN-20-01
DATE
06/22
DRAWN BY:
CD
CHECKED BY:
BB
REVIEWED BY:
BB
SCALE:
AS SHOWN

BAR IS ONE INCH ON ORIGINAL DRAWING
0" 1"
IF NOT ONE INCH ON THIS SHEET, ADJUST SCALES ACCORDINGLY

SHEET
ES1

BROWN ENGINEERS
501-448-0100

REGISTERED PROFESSIONAL ENGINEER
BRUCE W. BROWN
20995
06-01-2022
OKLAHOMA

P:\PRODUCTION\PROJECTS\WALL ENGINEERING (WE)\WE-055 SHAWNEE NORTHSIDE WASTEWATER TREATMENT PLANT\DWG\ES1.DWG
7/19/2022 2:48 PM

CABLE SCHEDULE

EQTP	EQNO	VOLTAGE_RATING	AMP_POLE	LOAD/CIRCUIT	PWR_ROUTE_TO	ENCLOSURE_RATING	DESCRIPTION_1	DIGITAL_CABLE	ANALOG_CABLE	I&C_ROUTE_TO
TS	2232a	–	–	–	–	–	HI TEMP	2#14/THWN/1C	–	VCP–2232
HS	2232b	120VAC–1P	–	–	–	–	E–STOP	2#14/THWN/1C	–	VCP–2232
MTR	2232b	480VAC–3P	–	15HP/F40	VCP–2232	–	–	–	–	–
TS	2232b	–	–	–	–	–	HI TEMP	2#14/THWN/1C	–	VCP–2232
HS	2232c	120VAC–1P	–	–	–	–	HOA	2#14/THWN/1C	–	VCP–2232
MTR	2232c	480VAC–3P	–	1HP/F20	VCP–2232	–	–	–	–	–
HS	2232d	120VAC–1P	–	–	–	–	E–STOP	2#14/THWN/1C	–	VCP–2232
HS	2232e	120VAC–1P	–	–	–	–	HOA	2#14/THWN/1C	–	VCP–2232
HS	2232f	120VAC–1P	–	–	–	–	E–STOP	2#14/THWN/1C	–	VCP–2232
CB	2241	480VAC–3P	30A/3P	10HP/F30	IPC–6	–	–	–	–	–
MTR	2241	480VAC–3P	–	7.5HP/F20	VFD–2241	–	–	–	–	–
VFD	2241	480VAC–3P	–	10HP/F30	CB–2241	NEMA 3R	–	8#14/THWN/1C	2–1ISP16/P–OS/1C	VCP–1831/1832
CB	2242	480VAC–3P	30A/3P	10HP/F30	IPC–6	–	–	–	–	–
MTR	2242	480VAC–3P	–	7.5HP/F20	VFD–2242	–	–	–	–	–
VFD	2242	480VAC–3P	–	10HP/F30	CB–2242	NEMA 3R	–	8#14/THWN/1C	2–1ISP16/P–OS/1C	VCP–1831/1832
CB	2312	480VAC–3P	15A/3P	1HP/F20	IPC–1	–	–	–	–	–
FCV	2312	480VAC–3P	15A/3P	1HP/F20	CB–2312	–	–	6#14/THWN/1C	2–1ISP16/P–OS/1C	RTU–A
CB	2313	480VAC–3P	15A/3P	1HP/F20	IPC–1	–	–	–	–	–
FCV	2313	480VAC–3P	15A/3P	1HP/F20	CB–2313	–	–	6#14/THWN/1C	2–1ISP16/P–OS/1C	RTU–A
CB	2321	120VAC–1P	20A/1P	50VA/1F20N	IPC–1	–	–	–	–	–
FIT	2321	120VAC–1P	20A/1P	50VA/1F20N	CB–2321	–	–	–	1ISP16/P–OS/1C	RTU–A
CB	2321a	120VAC–1P	20A/1P	50VA/1F20N	IPC–4	–	–	–	–	–
FIT	2321a	120VAC–1P	20A/1P	50VA/1F20N	CB–2321	–	–	–	1ISP16/P–OS/1C	RTU–C
CB	2431	120VAC–1P	20A/1P	1.5HP/1F20N	IPC–5	–	–	–	–	–
VCP	2431	120VAC–1P	–	1.5KVA/1F20N	CB–2431	NEMA 4X	–	24#14/THWN/1C	–	RTU–D
CB	2431a	120VAC–1P	20A/1P	50VA/1F20N	IPC–5	–	–	–	–	–
LIT	2431a	120VAC–1P	20A/1P	50VA/1F20	CB–2431a	–	–	–	1ISP16/P–OS/1C	VCP–2431
CB	2441	480VAC–3P	200A/3P	100HP/F200	IPC–5	–	–	–	–	–
MS	2441	–	–	–	–	–	SEAL FAIL	VENDOR CABLE	–	TB–2441
MTR	2441	480VAC–3P	–	75HP/VENDOR CABLE	VFD–2441	–	–	–	–	–
TB	2441	–	–	–	–	NEMA 4X	–	–	2–1ISP16/P–OS/1C	VCP–2431
TS	2441	–	–	–	–	–	OVER TEMP	–	VENDOR CABLE	TB–2441
VFD	2441	480VAC–3P	–	100HP/F200	CB–2441	NEMA 3R	–	8#14/THWN/1C	2–1ISP16/P–OS/1C	VCP–2431
CB	2442	480VAC–3P	200A/3P	100HP/F200	IPC–5	–	–	–	–	–
MS	2442	–	–	–	–	–	SEAL FAIL	VENDOR CABLE	–	TB–2442
MTR	2442	480VAC–3P	–	75HP/VENDOR CABLE	VFD–2442	–	–	–	–	–
TB	2442	–	–	–	–	NEMA 4X	–	–	2–1ISP16/P–OS/1C	VCP–2431
TS	2442	–	–	–	–	–	OVER TEMP	–	VENDOR CABLE	TB–2442
VFD	2442	480VAC–3P	–	100HP/F200	CB–2442	NEMA 3R	–	8#14/THWN/1C	2–1ISP16/P–OS/1C	VCP–2431
CB	2443	480VAC–3P	200A/3P	100HP/F200	IPC–5	–	–	–	–	–
MS	2443	–	–	–	–	–	SEAL FAIL	VENDOR CABLE	–	TB–2443
MTR	2443	480VAC–3P	–	75HP/VENDOR CABLE	VFD–2443	–	–	–	–	–
TB	2443	–	–	–	–	NEMA 4X	–	–	2–1ISP16/P–OS/1C	VCP–2431
TS	2443	–	–	–	–	–	OVER TEMP	–	VENDOR CABLE	TB–2443
VFD	2443	480VAC–3P	–	100HP/F200	CB–2443	NEMA 3R	–	8#14/THWN/1C	2–1ISP16/P–OS/1C	VCP–2431
CB	2511	480VAC–3P	15A/3P	1HP/F20	IPC–5	–	–	–	–	–
FCV	2511	480VAC–3P	15A/3P	1HP/F20	CB–2511	–	–	6#14/THWN/1C	2–1ISP16/P–OS/1C	RTU–D
CB	2512	480VAC–3P	15A/3P	1HP/F20	IPC–5	–	–	–	–	–
FCV	2512	480VAC–3P	15A/3P	1HP/F20	CB–2512	–	–	6#14/THWN/1C	2–1ISP16/P–OS/1C	RTU–D
CB	2513	480VAC–3P	15A/3P	1HP/F20	IPC–5	–	–	–	–	–
FCV	2513	480VAC–3P	15A/3P	1HP/F20	CB–2513	–	–	6#14/THWN/1C	2–1ISP16/P–OS/1C	RTU–D
CB	2521	120VAC–1P	20A/1P	50VA/1F20	IPC–5	–	–	–	–	–
FIT	2521	120VAC–1P	20A/1P	50VA/1F20	CB–2521	–	–	–	1ISP16/P–OS/1C	RTU–D
CB	2731	120VAC–1P	20A/1P	1.5KVA/1F20N	IPC–2	–	–	–	–	–
VCP	2731	120VAC–1P	–	1.5KVA/1F20N	CB–2731	NEMA 4X	–	24#14/THWN/1C	–	RTU–B
CB	2731a	120VAC–1P	20A/1P	50VA/1F20N	IPC–2	–	–	–	–	–
LIT	2731a	120VAC–1P	20A/1P	50VA/1F20N	CB–2731a	–	–	–	1ISP16/P–OS/1C	VCP–2731
CB	2741	480VAC–3P	100A/3P	40HP/F100	HP–2	–	–	–	–	–
MS	2741	–	–	–	–	–	SEAL FAIL	VENDOR CABLE	–	TB–2741
MTR	2741	480VAC–3P	–	25HP/VENDOR CABLE	VFD–2741	–	–	–	–	–

WALL ENGINEERING
PO BOX 1457, DURANT, OK 74702
OKLAHOMA CA #5413 EXP. JUNE 30, 2023

SUBMITTAL / REVISIONS:

DATE	BY	SUBMITTAL / REVISION
.	.	.
.	.	.
.	.	.
.	.	.
.	.	.
.	.	.
.	.	.
.	.	.

SHAWNEE MUNICIPAL AUTHORITY
WASTEWATER SYSTEM IMPROVEMENTS
SHAWNEE, OKLAHOMA

ELECTRICAL CABLE SCHEDULE

PROJECT NO.
SHN-20-01
DATE
06/22
DRAWN BY:
CD
CHECKED BY:
BB
REVIEWED BY:
BB
SCALE:
AS SHOWN

BAR IS ONE INCH ON ORIGINAL DRAWING
0" 1"
IF NOT ONE INCH ON THIS SHEET, ADJUST SCALES ACCORDINGLY

SHEET
ES6

REGISTERED PROFESSIONAL ENGINEER
BRUCE BROWN
20995
OKLAHOMA
06-01-2022

BROWN ENGINEERS
501-448-0100

P:\PRODUCTION\PROJECTS\WALL ENGINEERING (WE)\WE-055 SHAWNEE NORTHSIDE WASTEWATER TREATMENT PLANT\DWG\ES6.DWG
7/19/2022 2:49 PM

CABLE SCHEDULE

EQTP	EQNO	VOLTAGE_RATING	AMP_POLE	LOAD/CIRCUIT	PWR_ROUTE_TO	ENCLOSURE_RATING	DESCRIPTION_1	DIGITAL_CABLE	ANALOG_CABLE	I&C_ROUTE_TO
TB	2741	–	–	–	–	NEMA 4X	–	–	2–1ISP16/P–OS/1C	VCP–2731
TS	2741	–	–	–	–	–	OVER TEMP	–	VENDOR CABLE	TB–2741
VFD	2741	480VAC–3P	–	40HP/F100	CB–2741	NEMA 3R	–	8#14/THWN/1C	2–1ISP16/P–OS/1C	VCP–2731
CB	2742	480VAC–3P	100A/3P	40HP/F100	HP–2	–	–	–	–	–
MS	2742	–	–	–	–	–	SEAL FAIL	VENDOR CABLE	–	TB–2742
MTR	2742	480VAC–3P	–	25HP/VENDOR CABLE	VFD–2742	–	–	–	–	–
TB	2742	–	–	–	–	NEMA 4X	–	–	2–1ISP16/P–OS/1C	VCP–2731
TS	2742	–	–	–	–	–	OVER TEMP	–	VENDOR CABLE	TB–2742
VFD	2742	480VAC–3P	–	40HP/F100	CB–2742	NEMA 3R	–	8#14/THWN/1C	2–1ISP16/P–OS/1C	VCP–2731
CB	2743	480VAC–3P	25A/3P	10HP/F25	IPC–2	–	–	–	–	–
MTR	2743	480VAC–3P	–	10HP/F25	CB–2743	–	HOIST	–	–	–
CB	2821	120VAC–1P	20A/1P	50VA/1F20N	IPC–2	–	–	–	–	–
FIT	2821	120VAC–1P	20A/1P	50VA/1F20N	CB–2821	–	–	–	1ISP16/P–OS/1C	RTU–B
CB	3311	480VAC–3P	15A/3P	1HP/F20	IPC–1	–	–	–	–	–
FCV	3311	480VAC–3P	15A/3P	1HP/F20	CB–3311	–	–	6#14/THWN/1C	2–1ISP16/P–OS/1C	RTU–A
CB	4011	480VAC–3P	15A/3P	1HP/F20	IPC–1	–	–	–	–	–
FCV	4011	480VAC–3P	15A/3P	1HP/F20	CB–4011	–	–	6#14/THWN/1C	2–1ISP16/P–OS/1C	RTU–A
CB	4012	480VAC–3P	15A/3P	1HP/F20	IPC–1	–	–	–	–	–
FCV	4012	480VAC–3P	15A/3P	1HP/F20	CB–4012	–	–	6#14/THWN/1C	2–1ISP16/P–OS/1C	RTU–A
CB	4013	480VAC–3P	15A/3P	1HP/F20	IPC–1	–	–	–	–	–
FCV	4013	480VAC–3P	15A/3P	1HP/F20	CB–4013	–	–	6#14/THWN/1C	2–1ISP16/P–OS/1C	RTU–A
CB	4014	480VAC–3P	15A/3P	1HP/F20	IPC–1	–	–	–	–	–
FCV	4014	480VAC–3P	15A/3P	1HP/F20	CB–4014	–	–	6#14/THWN/1C	2–1ISP16/P–OS/1C	RTU–A
CB	4021	120VAC–1P	20A/1P	50VA/1F20N	IPC–1	–	–	–	–	–
FIT	4021	120VAC–1P	20A/1P	50VA/1F20N	CB–4021	–	–	–	1ISP16/P–OS/1C	RTU–A
CB	4022	120VAC–1P	20A/1P	50VA/1F20N	IPC–1	–	–	–	–	–
FIT	4022	120VAC–1P	20A/1P	50VA/1F20N	CB–4022	–	–	–	1ISP16/P–OS/1C	RTU–A
CB	4023	120VAC–1P	20A/1P	50VA/1F20N	IPC–1	–	–	–	–	–
FIT	4023	120VAC–1P	20A/1P	50VA/1F20N	CB–4023	–	–	–	1ISP16/P–OS/1C	RTU–A
CB	4024	120VAC–1P	20A/1P	50VA/1F20N	IPC–1	–	–	–	–	–
FIT	4024	120VAC–1P	20A/1P	50VA/1F20N	CB–4024	–	–	–	1ISP16/P–OS/1C	RTU–A
CB	4031	120VAC–1P	20A/1P	1.5KVA/1F20N	IPC–1	–	–	–	–	–
REFER TO VCP	4031	–	–	–	–	–	–	–	–	–
VCP	4031	120VAC–1P	–	1.5KVA/1F20N	CB–4031	NEMA 4X	–	30#14/THWN/1C	2–1ISP16/P–OS/1C	RTU–A
CB	4031a	120VAC–1P	20A/1P	50VA/1F20N	IPC–1	–	–	–	–	–
LIT	4031a	120VAC–1P	20A/1P	50VA/1F20N	CB–4031a	–	–	–	1ISP16/P–OS/1C	VCP–4031
CB	4041	480VAC–3P	200A/3P	100HP/F200	HP–1	–	–	–	–	–
MS	4041	–	–	–	–	–	SEAL FAIL	VENDOR CABLE	–	TB–4041
MTR	4041	480VAC–3P	–	75HP/VENDOR CABLE	VFD–4041	–	–	–	–	–
TB	4041	–	–	–	–	CL1, DIV 1	–	–	2–1ISP16/P–OS/1C	VCP–4031
TS	4041	–	–	–	–	–	OVER TEMP	–	VENDOR CABLE	TB–4041
VFD	4041	480VAC–3P	–	100HP/F200	CB–4041	NEMA 3R	–	8#14/THWN/1C	2–1ISP16/P–OS/1C	VCP–4031
CB	4042	480VAC–3P	200A/3P	100HP/F200	HP–1	–	–	–	–	–
MS	4042	–	–	–	–	–	SEAL FAIL	VENDOR CABLE	–	TB–4042
MTR	4042	480VAC–3P	–	75HP/VENDOR CABLE	VFD–4042	–	–	–	–	–
TB	4042	–	–	–	–	CL1, DIV 1	–	–	2–1ISP16/P–OS/1C	VCP–4031
TS	4042	–	–	–	–	–	OVER TEMP	–	VENDOR CABLE	TB–4042
VFD	4042	480VAC–3P	–	100HP/F200	CB–4042	NEMA 3R	–	8#14/THWN/1C	2–1ISP16/P–OS/1C	VCP–4031
CB	4043	480VAC–3P	200A/3P	100HP/F200	HP–1	–	–	–	–	–
MS	4043	–	–	–	–	–	SEAL FAIL	VENDOR CABLE	–	TB–4043
MTR	4043	480VAC–3P	–	75HP/VENDOR CABLE	VFD–4043	–	–	–	–	–
TB	4043	–	–	–	–	CL1, DIV 1	–	–	2–1ISP16/P–OS/1C	VCP–4031
TS	4043	–	–	–	–	–	OVER TEMP	–	VENDOR CABLE	TB–4043
VFD	4043	480VAC–3P	–	100HP/F200	CB–4043	NEMA 3R	–	8#14/THWN/1C	2–1ISP16/P–OS/1C	VCP–4031
CB	4044	480VAC–3P	200A/3P	100HP/F200	HP–1	–	–	–	–	–
MS	4044	–	–	–	–	–	SEAL FAIL	VENDOR CABLE	–	TB–4044
MTR	4044	480VAC–3P	–	75HP/VENDOR CABLE	VFD–4044	–	–	–	–	–
TB	4044	–	–	–	–	CL1, DIV 1	–	–	2–1ISP16/P–OS/1C	VCP–4031
TS	4044	–	–	–	–	–	OVER TEMP	–	VENDOR CABLE	TB–4044
VFD	4044	480VAC–3P	–	100HP/F200	CB–4044	NEMA 3R	–	8#14/THWN/1C	2–1ISP16/P–OS/1C	VCP–4031

P:\PRODUCTION\PROJECTS\WALL ENGINEERING (WE)\WE–055 SHAWNEE NORTHSIDE WASTEWATER TREATMENT PLANT\DWG\ES7.DWG
7/19/2022 2:50 PM

WALL ENGINEERING
PO BOX 1457, DURANT, OK 74702
OKLAHOMA CA #5413 EXP. JUNE 30, 2023

SUBMITTAL / REVISIONS:

DATE	BY	SUBMITTAL / REVISION
.	.	.
.	.	.
.	.	.
.	.	.
.	.	.
.	.	.
.	.	.
.	.	.

SHAWNEE MUNICIPAL AUTHORITY
WASTEWATER SYSTEM IMPROVEMENTS
SHAWNEE, OKLAHOMA

ELECTRICAL CABLE SCHEDULE

PROJECT NO.
SHN-20-01
DATE
06/22
DRAWN BY:
CD
CHECKED BY:
BB
REVIEWED BY:
BB
SCALE:
AS SHOWN

BAR IS ONE INCH ON ORIGINAL DRAWING
0" 1"
IF NOT ONE INCH ON THIS SHEET, ADJUST SCALES ACCORDINGLY

SHEET
ES7

REGISTERED PROFESSIONAL ENGINEER
BRUCE BROWN
20995
OKLAHOMA
06-01-2022
BROWN ENGINEERS
501-448-0100

CABLE SCHEDULE

EQTP	EQNO	VOLTAGE_RATING	AMP_POLE	LOAD/CIRCUIT	PWR_ROUTE_TO	ENCLOSURE_RATING	DESCRIPTION_1	DIGITAL_CABLE	ANALOG_CABLE	I&C_ROUTE_TO
AAH	4081	120VAC-1P	20A/1P	50VA/1F20N	CB-4081	–	GAS	–	1ISP16/P-OS/1C	RTU-A
CB	4081	120VAC-1P	20A/1P	50VA/1F20N	IPC-1	–	–	–	–	–
AAH	4082	120VAC-1P	20A/1P	50VA/1F20N	CB-4082	–	GAS	–	1ISP16/P-OS/1C	RTU-A
CB	4082	120VAC-1P	20A/1P	50VA/1F20N	IPC-1	–	–	–	–	–
CB	8011	480VAC-3P	25A/3P	6HP/F25	IPC-2	–	–	–	–	–
FVNR	8011	480VAC-3P	NEMA SIZE 1	6HP/F20	CB-8011	NEMA 4X	–	6#14/THWN/1C	–	RTU-B
MS	8011	–	–	–	–	–	SEAL FAIL	VENDOR CABLE	–	FVNR-8011
MTR	8011	480VAC-3P	–	6HP/F25	FVNR-8011	–	–	–	–	–
TS	8011	–	–	–	–	–	OVER TEMP	–	VENDOR CABLE	FVNR-8011
CB	8012	480VAC-3P	25A/3P	6HP/F25	IPC-2	–	–	–	–	–
FVNR	8012	480VAC-3P	NEMA SIZE 1	6HP/F20	CB-8012	NEMA 4X	–	6#14/THWN/1C	–	RTU-B
MS	8012	–	–	–	–	–	SEAL FAIL	VENDOR CABLE	–	FVNR-8012
MTR	8012	480VAC-3P	–	6HP/F25	FVNR-8012	–	–	–	–	–
TS	8012	–	–	–	–	–	OVER TEMP	–	VENDOR CABLE	FVNR-8012
CB	8031	120VAC-1P	20A/1P	1.5KVA/1F20N	IPC-2	–	–	–	–	–
REFER TO VCP	8031	–	–	–	–	–	–	–	–	–
VCP	8031	120VAC-1P	–	1.5KVA/1F20N	CB-8031	NEMA 4X	–	30#14/THWN/1C	2-1ISP16/P-OS/1C	RTU-B
CB	8031a	120VAC-1P	20A/1P	50VA/1F20N	IPC-2	–	–	–	–	–
LIT	8031a	120VAC-1P	20A/1P	50VA/1F20N	CB-8031a	–	–	–	1ISP16/P-OS/1C	VCP-8031
CB	8041	480VAC-3P	100A/3P	60HP/F110	HP-2	–	–	–	–	–
MS	8041	–	–	–	–	–	SEAL FAIL	VENDOR CABLE	–	TB-8041
MTR	8041	480VAC-3P	–	40HP/VENDOR CABLE	VFD-8041	–	–	–	–	–
TB	8041	–	–	–	–	NEMA 4X	–	–	2-1ISP16/P-OS/1C	VCP-8031
TS	8041	–	–	–	–	–	OVER TEMP	–	VENDOR CABLE	TB-8041
VFD	8041	480VAC-3P	–	60HP/F110	CB-8041	NEMA 3R	–	8#14/THWN/1C	2-1ISP16/P-OS/1C	VCP-8031
CB	8042	480VAC-3P	100A/3P	60HP/F110	HP-2	–	–	–	–	–
MS	8042	–	–	–	–	–	SEAL FAIL	VENDOR CABLE	–	TB-8042
MTR	8042	480VAC-3P	–	40HP/VENDOR CABLE	VFD-8042	–	–	–	–	–
TB	8042	–	–	–	–	NEMA 4X	–	–	2-1ISP16/P-OS/1C	VCP-8031
TS	8042	–	–	–	–	–	OVER TEMP	–	VENDOR CABLE	TB-8042
VFD	8042	480VAC-3P	–	60HP/F110	CB-8042	NEMA 3R	–	8#14/THWN/1C	2-1ISP16/P-OS/1C	VCP-8031
CB	8043	480VAC-3P	100A/3P	60HP/F110	HP-2	–	–	–	–	–
MS	8043	–	–	–	–	–	SEAL FAIL	VENDOR CABLE	–	TB-8043
MTR	8043	480VAC-3P	–	40HP/VENDOR CABLE	VFD-8043	–	–	–	–	–
TB	8043	–	–	–	–	NEMA 4X	–	–	2-1ISP16/P-OS/1C	VCP-8031
TS	8043	–	–	–	–	–	OVER TEMP	–	VENDOR CABLE	TB-8043
VFD	8043	480VAC-3P	–	60HP/F110	CB-8043	NEMA 3R	–	8#14/THWN/1C	2-1ISP16/P-OS/1C	VCP-8031
CB	8044	480VAC-3P	100A/3P	60HP/F110	HP-2	–	–	–	–	–
MS	8044	–	–	–	–	–	SEAL FAIL	VENDOR CABLE	–	TB-8044
MTR	8044	480VAC-3P	–	40HP/VENDOR CABLE	VFD-8044	–	–	–	–	–
TB	8044	–	–	–	–	NEMA 4X	–	–	2-1ISP16/P-OS/1C	VCP-8031
TS	8044	–	–	–	–	–	OVER TEMP	–	VENDOR CABLE	TB-8044
VFD	8044	480VAC-3P	–	60HP/F110	CB-8044	NEMA 3R	–	8#14/THWN/1C	2-1ISP16/P-OS/1C	VCP-8031
CB	8051	480VAC-3P	15A/3P	1HP/F20	IPC-2	–	–	–	–	–
FCV	8051	480VAC-3P	15A/3P	1HP/F20	CB-8051	–	–	6#14/THWN/1C	2-1ISP16/P-OS/1C	RTU-B
CB	8052	480VAC-3P	15A/3P	1HP/F20	IPC-2	–	–	–	–	–
FCV	8052	480VAC-3P	15A/3P	1HP/F20	CB-8052	–	–	6#14/THWN/1C	2-1ISP16/P-OS/1C	RTU-B
CB	9011	480VAC-3P	15A/3P	1HP/F20	IPC-2	–	–	–	–	–
FCV	9011	480VAC-3P	15A/3P	1HP/F20	CB-9011	–	–	6#14/THWN/1C	2-1ISP16/P-OS/1C	RTU-B
CB	9012	480VAC-3P	15A/3P	1HP/F20	IPC-2	–	–	–	–	–
FCV	9012	480VAC-3P	15A/3P	1HP/F20	CB-9012	–	–	6#14/THWN/1C	2-1ISP16/P-OS/1C	RTU-B
CB	9013	480VAC-3P	15A/3P	1HP/F20	IPC-2	–	–	–	–	–
FCV	9013	480VAC-3P	15A/3P	1HP/F20	CB-9013	–	–	6#14/THWN/1C	2-1ISP16/P-OS/1C	RTU-B
CB	9014	480VAC-3P	15A/3P	1HP/F20	IPC-2	–	–	–	–	–
FCV	9014	480VAC-3P	15A/3P	1HP/F20	CB-9014	–	–	6#14/THWN/1C	2-1ISP16/P-OS/1C	RTU-B
CB	9021	120VAC-1P	20A/1P	50VA/1F20N	IPC-2	–	–	–	–	–
FIT	9021	120VAC-1P	20A/1P	50VA/1F20N	CB-9021	–	–	–	1ISP16/P-OS/1C	RTU-B
CB	9022	120VAC-1P	20A/1P	50VA/1F20N	IPC-2	–	–	–	–	–
FIT	9022	120VAC-1P	20A/1P	50VA/1F20N	CB-9022	–	–	–	1ISP16/P-OS/1C	RTU-B
CB	9023	120VAC-1P	20A/1P	50VA/1F20N	IPC-2	–	–	–	–	–

P:\PRODUCTION\PROJECTS\WALL ENGINEERING (WE)\WE-055 SHAWNEE NORTHSIDE WASTEWATER TREATMENT PLANT\DWG\ES8.DWG
7/19/2022 2:52 PM

WALL ENGINEERING
PO BOX 1457, DURANT, OK 74702
OKLAHOMA CA #5413 EXP. JUNE 30, 2023

SUBMITTAL / REVISIONS:

DATE	BY	SUBMITTAL / REVISION
.	.	.
.	.	.
.	.	.
.	.	.
.	.	.
.	.	.
.	.	.

SHAWNEE MUNICIPAL AUTHORITY
WASTEWATER SYSTEM IMPROVEMENTS
SHAWNEE, OKLAHOMA

ELECTRICAL CABLE SCHEDULE

PROJECT NO.
SHN-20-01
DATE
06/22
DRAWN BY:
CD
CHECKED BY:
BB
REVIEWED BY:
BB
SCALE:
AS SHOWN

BAR IS ONE INCH ON ORIGINAL DRAWING
0" 1"
IF NOT ONE INCH ON THIS SHEET, ADJUST SCALES ACCORDINGLY

SHEET
ES8

REGISTERED PROFESSIONAL ENGINEER
BRUCE W. BROWN
20995
06-01-2022
OKLAHOMA

BROWN ENGINEERS
501-448-0100

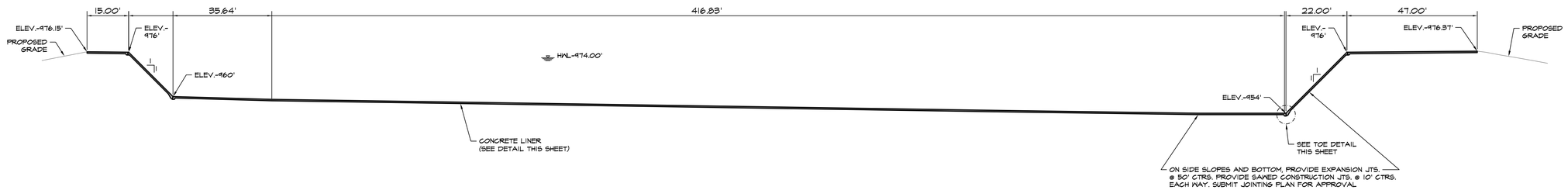

A FEB-1

SECTION VIEW

SCALE: 1"=20'

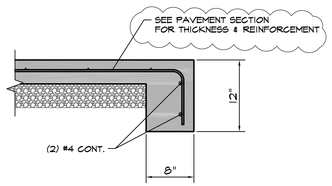

CONCRETE TOP DETAIL

SCALE: 1:1

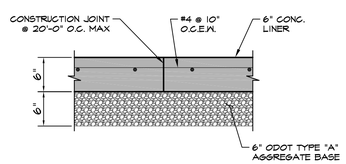

NOTES:

1. CONTRACTOR SHALL BEND ALL BARS AS REQUIRED FOR INSTALLATION.
2. CONTRACTOR SHALL ALTERNATE BARS TO BE CONTINUOUS THROUGH JOINT. STOP ALTERNATE BARS 2" FROM JOINT.
3. CONTRACTOR SHALL PROVIDE 6" PVC CENTER BULB WATER STOP IN JOINTS.
4. ON SIDE SLOPES AND BOTTOM, PROVIDE EXPANSION JTS. @ 50' CTRS. PROVIDE SAWED CONSTRUCTION JTS. @ 10' CTRS. EACH WAY. SUBMIT JOINTING PLAN FOR APPROVAL.

JOINT DETAIL/SECTION

SCALE: N.T.S.

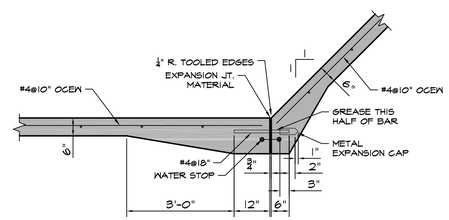

EXPANSION JOINT AT TOE OF SIDESLOPES

SCALE: 1:2

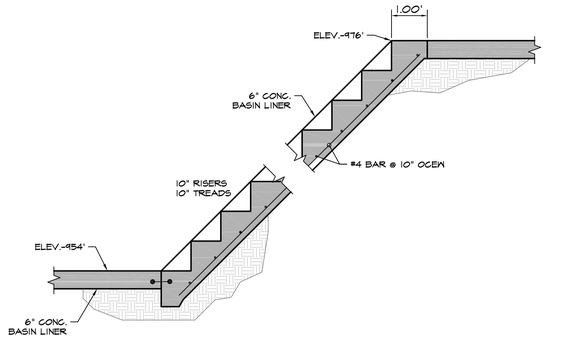

NOTE:
CONTRACTOR TO FIELD VERIFY STAIR RISER/TREAD & SUBMIT TO ENGINEER FOR APPROVAL

STAIR DETAILS

SCALE: 1:2

REGISTERED PROFESSIONAL ENGINEER
BRANDON WALL
21108
OKLAHOMA

WALL ENGINEERING
223 N. WASHINGTON AVE., DURANT, OK 74701
OKLAHOMA CA #5413 EXP. JUNE 30, 2023

SUBMITTAL / REVISIONS:

DATE	BY	SUBMITTAL / REVISION
03/22	JR	ODEQ SUBMITTAL
06/22	JR	ISSUED FOR BIDDING
07/22	JR	REVISED PER ADDENDUM NO. 2

SHAWNEE MUNICIPAL AUTHORITY
WASTEWATER SYSTEM IMPROVEMENTS
CONTRACT DOCUMENTS VOL. 4 OF 6 - NORTHSIDE WWTP

WET WEATHER FLOW EQUALIZATION BASIN
SECTION VIEW AND DETAILS

PROJECT NO. SHN-20-01
DATE 06/22
DRAWN BY: JR
CHECKED BY: BW
REVIEWED BY: DBW
SCALE: 1"=20'

BAR IS ONE INCH ON ORIGINAL DRAWING
0" 1"
IF NOT ONE INCH ON THIS SHEET, ADJUST SCALES ACCORDINGLY

SHEET
FEB-2

PCS

CONTROL PANEL – RTU–B

OPERATOR INTERFACE/ CONTROL DEVICES

POWER SOURCE

FIELD

YI 8031 STATUS RUNNING
A 8031 ALARM
YI 8031 STATUS OVERTEMP
A 8031 ALARM
YI 8031 STATUS SEAL FAIL
A 9011 ALARM
YI 9011 STATUS OC
HS 9011 ACTION AM
HS 9011 ACTION OC
FI 9021 NUM FLOW
FAH 9021 ALARM FLOW
FR 9021 TREND FLOW
A 8031 ALARM
YI 8031 STATUS SEAL FAIL
A 8031 ALARM
YI 8031 STATUS OVERTEMP
YI 8031 STATUS RUNNING
LAH 8031 ALARM HIGH
LIR 8031 LEVEL
A 9012 ALARM
YI 9012 STATUS OC
HS 9012 ACTION AM
HS 9012 ACTION OC
FI 9022 NUM FLOW
FAH 9022 ALARM FLOW
FR 9022 TREND FLOW

YY 8031 DI PUMP 1 RUNNING
YY 8031 DI PUMP 1 OVERTEMP
YY 8031 DI PUMP 1 SEAL FAIL
9011 361 DI OPENED
YY 9011 DI CLOSED
YY 9011 DI IN REMOTE
FY 9011 AI POSITION FEEDBACK
FY 9011 AO POSITION
FY 9021 AI FLOW
YY 8031 DI PUMP 2 SEAL FAIL
YY 8031 DI PUMP 2 OVERTEMP
YY 8031 DI PUMP 2 RUNNING
LY 8031 AI LEVEL
YY 9012 DI OPENED
YY 9012 DI CLOSED
YY 9012 DI IN REMOTE
FY 9012 AI POSITION FEEDBACK
FY 9012 AO POSITION
FY 9022 AI FLOW

CB 8041 480VAC–3P 100A/3P 60HP/F100
CB 9011 480VAC–3P 15A/3P 1HP/F20
CB 9021 120VAC–1P 20A/1P 50VA/1F20N
CB 8031 120VAC–1P 20A/1P 1.5KVA/1F20N
CB 8042 480VAC–3P 100A/3P 60HP/F100
CB 8031a 120VAC–1P 20A/1P 50VA/1F20N
CB 9012 480VAC–3P 15A/3P 1HP/F20
CB 9022 120VAC–1P 20A/1P 50VA/1F20N

VCP– 8031
120VAC–1P
NEMA 4X
1.5KVA/1F20N
PRE EQ PUMP CONTROL PANEL

LIT 8031c

VFD– 8041
480VAC–3P
NEMA 3R
60HP/F100
DI – RUNNING
AI – SPEED FB
DI – READY
DO – START
AO – SPEED SP
DI – FAIL

VFD– 8042
480VAC–3P
NEMA 3R
60HP/F100
DI – RUNNING
AI – SPEED FB
DI – READY
DO – START
AO – SPEED SP
DI – FAIL

TB 8041 120VAC–1P NEMA 4X
TS 8041 OVER TEMP
MS 8041 SEAL FAIL
MTR 8041 480VAC–3P 40HP/V. CABLE
FCV 9011 1HP/F20
FIT 9021 50VA/1F20N

TB 8042 120VAC–1P NEMA 4X
TS 8042 OVER TEMP
MS 8042 SEAL FAIL
MTR 8042 480VAC–3P 40HP/V. CABLE
FCV 9012 1HP/F20
FIT 9022 50VA/1F20N

CONTINUED FROM PREVIOUS SHEET

CONTINUED NEXT SHEET

PRE EQ LIFT STATION

P:\PRODUCTION\PROJECTS\WALL ENGINEERING (WE)\WE–055 SHAWNEE NORTHSIDE WASTEWATER TREATMENT PLANT\DWG\PI10_.DWG
7/19/2022 2:39 PM

WALL ENGINEERING
PO BOX 1457, DURANT, OK 74702
OKLAHOMA CA #5413 EXP. JUNE 30, 2023

SUBMITTAL / REVISIONS:

DATE	BY	SUBMITTAL / REVISION
.	.	.
.	.	.
.	.	.
.	.	.
.	.	.
.	.	.
.	.	.

SHAWNEE MUNICIPAL AUTHORITY
WASTEWATER SYSTEM IMPROVEMENTS
SHAWNEE, OKLAHOMA

PROCESS AND INSTRUMENTATION DIAGRAM

PROJECT NO.
SHN-20-01
DATE
06/22
DRAWN BY:
CD
CHECKED BY:
BB
REVIEWED BY:
BB
SCALE:
AS SHOWN

BAR IS ONE INCH ON ORIGINAL DRAWING
0" 1"
IF NOT ONE INCH ON THIS SHEET, ADJUST SCALES ACCORDINGLY

SHEET
P10

REGISTERED PROFESSIONAL ENGINEER
BRUCE BROWN
20995
OKLAHOMA
06-01-2022

BROWN ENGINEERS
501-448-0100

PCS

CONTROL PANEL – RTU–B

OPERATOR INTERFACE/ CONTROL DEVICES

POWER SOURCE

FIELD

YI 8031 STATUS RUNNING
A 8031 ALARM
YI 8031 STATUS OVERTEMP
A 8031 ALARM
YI 8031 STATUS SEAL FAIL
A 9013 ALARM
YI 9013 STATUS OC
HS 9013 ACTION AM
HS 9013 ACTION OC
FI 9023 NUM FLOW
FAH 9023 ALARM FLOW
FR 9023 TREND FLOW
A 8031 ALARM
YI 8031 STATUS SEAL FAIL
A 8031 ALARM
YI 8031 STATUS OVERTEMP
YI 8031 STATUS RUNNING
A 9014 ALARM
YI 9014 STATUS OC
HS 9014 ACTION AM
HS 9014 ACTION OC
FI 9024 NUM FLOW
FAH 9024 ALARM FLOW
FR 9024 TREND FLOW

YY 9013 DI OPENED
YY 9013 DI CLOSED
YY 9013 DI IN REMOTE
FY 9013 AI POSITION FEEDBACK
FY 9013 AO POSITION
YY 9014 DI OPENED
YY 9014 DI CLOSED
YY 9014 DI IN REMOTE
FY 9014 AI POSITION FEEDBACK
FY 9014 AO POSITION

YY 8031 DI PUMP 3 RUNNING
YY 8031 DI PUMP 3 OVERTEMP
YY 8031 DI PUMP 3 SEAL FAIL
FY 9023 AI FLOW
YY 8031 DI PUMP 4 SEAL FAIL
YY 8031 DI PUMP 4 OVERTEMP
YY 8031 DI PUMP 4 RUNNING
FY 9024 AI FLOW

CB 8043 480VAC–3P 100A/3P 60HP/F100
CB 9013 480VAC–3P 15A/3P 1HP/F20
CB 9023 120VAC–1P 20A/1P 50VA/1F20N
CB 8044 480VAC–3P 100A/3P 60HP/F100
CB 9014 480VAC–3P 15A/3P 1HP/F20
CB 9024 120VAC–1P 20A/1P 50VA/1F20N

REFER TO VCP– 8031

PRE EQ PUMP CONTROL PANEL

DI – RUNNING
AI – SPEED FB
DI – READY
DO – START
AO – SPEED SP
DI – FAIL

VFD– 8043 480VAC–3P NEMA 3R 60HP/F100
VFD– 8044 480VAC–3P NEMA 3R 60HP/F100

TS 8043 OVER TEMP
TB 8043 120VAC–1P NEMA 4X
MS 8043 SEAL FAIL
TS 8044 OVER TEMP
TB 8044 120VAC–1P NEMA 4X
MS 8044 SEAL FAIL

M
MTR 8043 480VAC–3P 40HP/V. CABLE
MTR 8044 480VAC–3P 40HP/V. CABLE
FCV 9013 1HP/F20
FCV 9014 1HP/F20
FIT 9023 50VA/1F20N
FIT 9024 50VA/1F20N

CONTINUED PREVIOUS SHEET

P13 SBR
P12 SBR
P12 SBR

PRE EQ LIFT STATION

P:\PRODUCTION\PROJECTS\WALL ENGINEERING (WE)\WE–055 SHAWNEE NORTHSIDE WASTEWATER TREATMENT PLANT\DWG\PI11_.DWG
7/19/2022 2:40 PM

WALL ENGINEERING
PO BOX 1457, DURANT, OK 74702
OKLAHOMA CA #5413 EXP. JUNE 30, 2023

SUBMITTAL / REVISIONS:

DATE	BY	SUBMITTAL / REVISION
.	.	.
.	.	.
.	.	.
.	.	.
.	.	.
.	.	.
.	.	.

SHAWNEE MUNICIPAL AUTHORITY
WASTEWATER SYSTEM IMPROVEMENTS
SHAWNEE, OKLAHOMA

PROCESS AND INSTRUMENTATION DIAGRAM

PROJECT NO.
SHN-20-01
DATE
06/22
DRAWN BY:
CD
CHECKED BY:
BB
REVIEWED BY:
BB
SCALE:
AS SHOWN

BAR IS ONE INCH ON ORIGINAL DRAWING
0" 1"
IF NOT ONE INCH ON THIS SHEET, ADJUST SCALES ACCORDINGLY

REGISTERED PROFESSIONAL ENGINEER
BRUCE BROWN
20995
06-01-2022
OKLAHOMA

BROWN ENGINEERS
501-448-0100

SHEET
P11

PCS

LIR 1071 LEVEL
AIR 1081 TSS
AIR 1082 DO
A 1011 ALARM
YI 1011 STATUS OC
HS 1011 ACTION AM
HS 1011 ACTION OC
YI 1041 STATUS READY
YI 1041 STATUS RUNNING
A 1041 ALARM FAILED
KQI 1041 NUM ETA
HS 1041 ACTION RESET ETM
HS 1041 ACTION HOA
A 1012 ALARM
YI 1012 STATUS OC
HS 1012 ACTION AM
HS 1012 ACTION OC
A 1013 ALARM
YI 1013 STATUS OC
HS 1013 ACTION AM
HS 1013 ACTION OC
A 1014 ALARM
YI 1014 STATUS OC
HS 1014 ACTION AM
HS 1014 ACTION OC
LIR 1072 LEVEL
AIR 1084 TSS
AIR 1083 DO
YI 1042 STATUS READY
YI 1042 STATUS RUNNING
A 1042 ALARM FAILED
KQI 1042 NUM ETA
HS 1042 ACTION RESET ETM
HS 1042 ACTION HOA
A 1015 ALARM
YI 1015 STATUS OC
HS 1015 ACTION AM
HS 1015 ACTION OC
A 1016 ALARM
YI 1016 STATUS OC
HS 1016 ACTION AM
HS 1016 ACTION OC

CONTROL PANEL

OPERATOR INTERFACE/ CONTROL DEVICES

POWER SOURCE

CB 1011 480VAC–3P 15A/3P 1HP/F20
CB 1041 480VAC–3P 125A/3P 60HP/F225
CB 1071 120VAC–1P 20A/1P 1.5KVA/1F20N
CB 1082 120VAC–1P 20A/1P 1.5KVA/1F20N
CB 1081 120VAC–1P 20A/1P 1.5KVA/1F20N
CB 1012 480VAC–3P 15A/3P 1HP/F20
CB 1013 480VAC–3P 15A/3P 1HP/F20
CB 1031 120VAC–1P 20A/1P 1.5KVA/1F20N
CB 1014 480VAC–3P 15A/3P 1HP/F20
CB 1042 480VAC–3P 125A/3P 60HP/F225
CB 1072 120VAC–1P 20A/1P 1.5KVA/1F20N
CB 1084 120VAC–1P 20A/1P 1.5KVA/1F20N
CB 1083 120VAC–1P 20A/1P 1.5KVA/1F20N
CB 1015 480VAC–3P 15A/3P 1HP/F20
CB 1016 480VAC–3P 15A/3P 1HP/F20

FIELD

FVNR–1041
480VAC–3P
NEMA SIZE 5
NEMA 4X
60HP/F225

VCP–1031
120VAC–1P
1.5KVA/1F20N

SBR CONTROL PANEL

FVNR–1042
480VAC–3P
NEMA SIZE 5
NEMA 4X
60HP/F225

TB 1031 NEMA 4X

LIT 1071
AIT 1081 DO 50VA/1F20N
AIT 1082 TSS 50VA/1F20N
50VA/1F20N
LIT 1072
AIT 1083 DO 50VA/1F20N
AIT 1084 TSS 50VA/1F20N
50VA/1F20N

FCV 1011 1HP/F20
LS 1061 HI LEVEL
FCV 1012 1HP/F20
FCV 1013 1HP/F20
FCV 1014 1HP/F20
LS 1062 HI LEVEL
FCV 1015 1HP/F20
FCV 1016 1HP/F20

P11 PRE EQ BASIN
P17 POST EQ BASIN
P14 SLUDGE PUMPS

480VAC–3P MTR 1041 60HP V. CABLE
TS 1042
MS 1042
480VAC–3P MTR 1042 60HP V. CABLE

SBR #1
SBR #2

P11 PRE EQ BASIN

WALL ENGINEERING
PO BOX 1457, DURANT, OK 74702
OKLAHOMA CA #5413 EXP. JUNE 30, 2023

SUBMITTAL / REVISIONS:

DATE	BY	SUBMITTAL / REVISION
.	.	.
.	.	.
.	.	.
.	.	.
.	.	.
.	.	.
.	.	.
.	.	.

SHAWNEE MUNICIPAL AUTHORITY
WASTEWATER SYSTEM IMPROVEMENTS
SHAWNEE, OKLAHOMA

PROCESS AND INSTRUMENTATION DIAGRAM

PROJECT NO. SHN-20-01
DATE 06/22
DRAWN BY: CD
CHECKED BY: BB
REVIEWED BY: BB
SCALE: AS SHOWN

BAR IS ONE INCH ON ORIGINAL DRAWING
0" 1"
IF NOT ONE INCH ON THIS SHEET, ADJUST SCALES ACCORDINGLY

SHEET P12

REGISTERED PROFESSIONAL ENGINEER
BRUCE BROWN
20995
06-01-2022
OKLAHOMA

BROWN ENGINEERS
501-448-0100

P:\PRODUCTION\PROJECTS\WALL ENGINEERING (WE)\WE-055 SHAWNEE NORTHSIDE WASTEWATER TREATMENT PLANT\DWG\PI12_.DWG
7/19/2022 2:42 PM

PCS

CONTROL PANEL

OPERATOR INTERFACE/ CONTROL DEVICES

POWER SOURCE

FIELD

LIR 1073 LEVEL
AIR 1086 TSS
AIR 1085 DO
A 1017 ALARM
YI 1017 STATUS OC
HS 1017 ACTION AM
HS 1017 ACTION OC
YI 1043 STATUS READY
YI 1043 STATUS RUNNING
A 1043 ALARM FAILED
KQI 1043 NUM ETA
HS 1043 ACTION RESET ETM
HS 1043 ACTION HOA
A 1018 ALARM
YI 1018 STATUS OC
HS 1018 ACTION AM
HS 1018 ACTION OC
A 1019 ALARM
YI 1019 STATUS OC
HS 1019 ACTION AM
HS 1019 ACTION OC

CB 1017 480VAC–3P 15A/3P 1HP/F20
CB 1043 480VAC–3P 125A/3P 60HP/F225
CB 1073 120VAC–1P 20A/1P 50VA/1F20N
CB 1086 120VAC–1P 20A/1P 50VA/1F20N
CB 1085 120VAC–1P 20A/1P 50VA/1F20N
CB 1018 480VAC–3P 15A/3P 1HP/F20
CB 1019 480VAC–3P 15A/3P 1HP/F20

FVNR–1043
480VAC–3P
NEMA SIZE 5
NEMA 4X
60HP/F225

REFER TO TB–1031

LIT 1073 50VA/1F20N
AIT 1086 TSS 50VA/1F20N
AIT 1085 DO 50VA/1F20N

FCV 1017 1HP/F20
LS 1063 HI LEVEL
FCV 1018 1HP/F20
FCV 1019 1HP/F20

PRE EQ BASIN

TS 1043
MS 1043
480VAC–3P MTR 1043 60HP/V. CABLE

P17 POST EQ BASIN
P14 SLUDGE PUMPS

SBR #3

WALL ENGINEERING
PO BOX 1457, DURANT, OK 74702
OKLAHOMA CA #5413 EXP. JUNE 30, 2023

SUBMITTAL / REVISIONS:

DATE	BY	SUBMITTAL / REVISION
.	.	.
.	.	.
.	.	.
.	.	.
.	.	.
.	.	.
.	.	.
.	.	.

SHAWNEE MUNICIPAL AUTHORITY
WASTEWATER SYSTEM IMPROVEMENTS
SHAWNEE, OKLAHOMA

PROCESS AND INSTRUMENTATION DIAGRAM

PROJECT NO. SHN-20-01
DATE 06/22
DRAWN BY: CD
CHECKED BY: BB
REVIEWED BY: BB
SCALE: AS SHOWN

BAR IS ONE INCH ON ORIGINAL DRAWING
0' 1'
IF NOT ONE INCH ON THIS SHEET, ADJUST SCALES ACCORDINGLY

SHEET
P13

BROWN ENGINEERS 501-448-0100

P:\PRODUCTION\PROJECTS\WALL ENGINEERING (WE)\WE-055 SHAWNEE NORTHSIDE WASTEWATER TREATMENT PLANT\DWG\PI13_.DWG
7/19/2022 2:43 PM

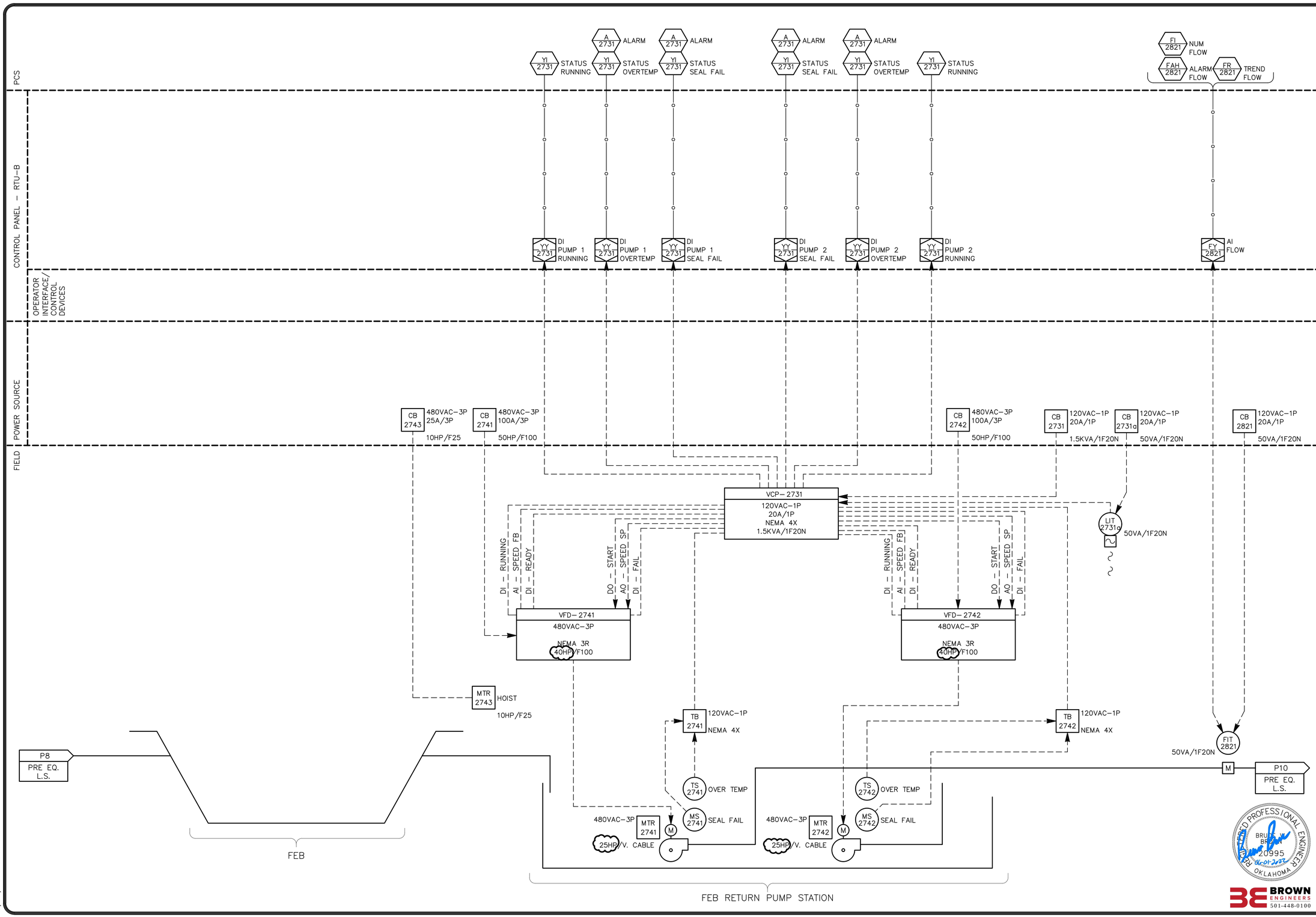

P:\PRODUCTION\PROJECTS\WALL ENGINEERING (WE)\WE-055 SHAWNEE NORTHSIDE WASTEWATER TREATMENT PLANT\DWG\PI19_.DWG
7/19/2022 2:44 PM

WALL ENGINEERING
PO BOX 1457, DURANT, OK 74702
OKLAHOMA CA #5413 EXP. JUNE 30, 2023

SUBMITTAL / REVISIONS:

DATE	BY	SUBMITTAL / REVISION
.	.	.
.	.	.
.	.	.
.	.	.
.	.	.
.	.	.
.	.	.
.	.	.

SHAWNEE MUNICIPAL AUTHORITY
WASTEWATER SYSTEM IMPROVEMENTS
SHAWNEE, OKLAHOMA

PROCESS AND INSTRUMENTATION DIAGRAM

PROJECT NO.
SHN-20-01
DATE
06/22
DRAWN BY:
CD
CHECKED BY:
BB
REVIEWED BY:
BB
SCALE:
AS SHOWN

BAR IS ONE INCH ON ORIGINAL DRAWING
0" 1"
IF NOT ONE INCH ON THIS SHEET, ADJUST SCALES ACCORDINGLY

SHEET
P19

BROWN ENGINEERS 501-448-0100

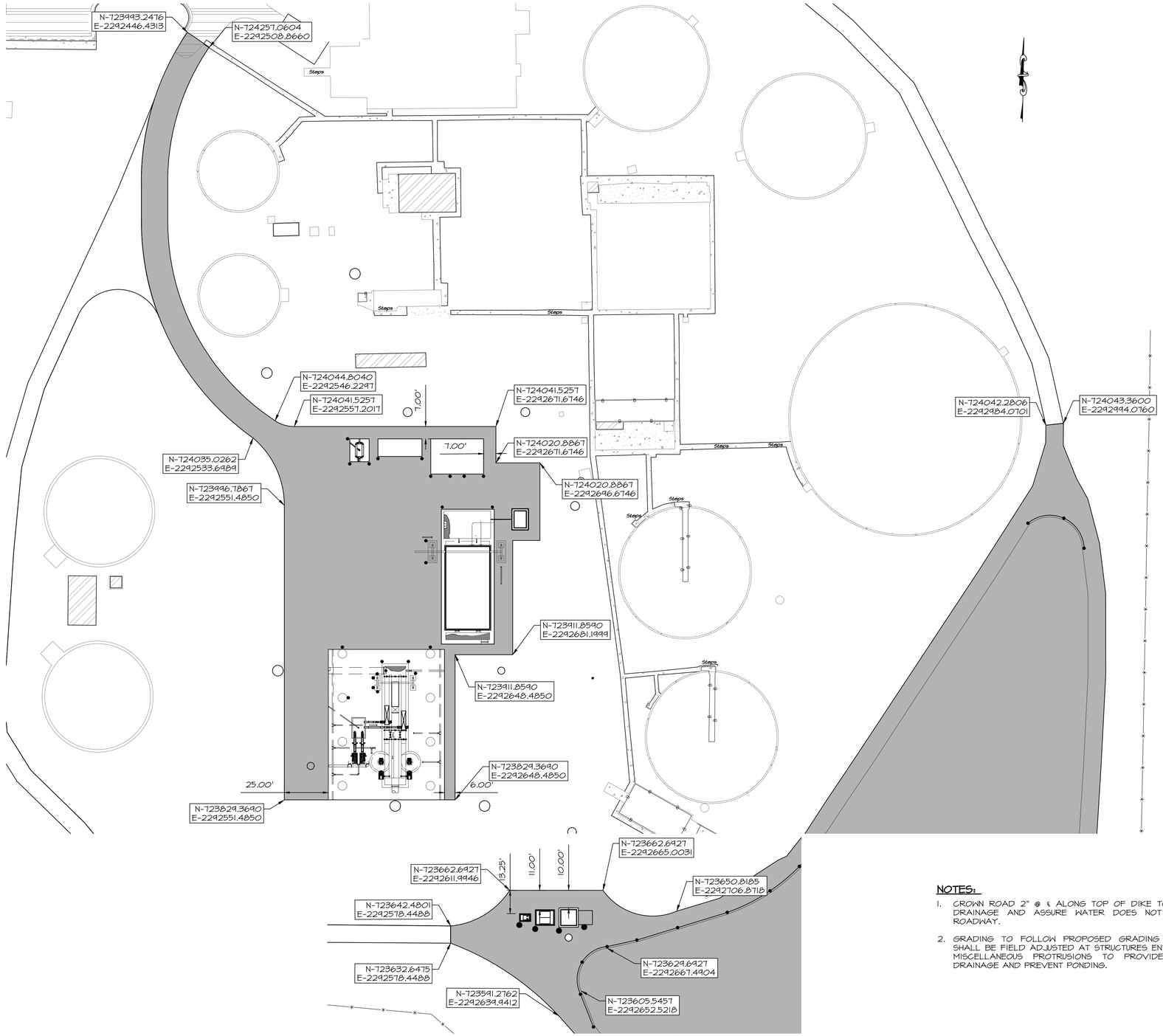

LEGEND

- EXISTING FENCE
- PROPOSED UNIT
- CONCRETE SITE PAVING (5,122 S.Y.)
- GUARD RAIL (SEE DETAIL SHEETS)

TYPICAL SYMBOLS

- MANHOLE
- YARD HYDRANT
- PIPE BOLLARDS

NOTES:

1. CROWN ROAD 2" @ ℄ ALONG TOP OF DIKE TO PROVIDE DRAINAGE AND ASSURE WATER DOES NOT POND ON ROADWAY.
2. GRADING TO FOLLOW PROPOSED GRADING PLAN, BUT SHALL BE FIELD ADJUSTED AT STRUCTURES ENTRYWAYS, & MISCELLANEOUS PROTRUSIONS TO PROVIDE POSITIVE DRAINAGE AND PREVENT PONDING.

WALL ENGINEERING
223 N. WASHINGTON, DURANT, OK 74701
OKLAHOMA CA #5413 EXP. JUNE 30, 2023

SUBMITTAL / REVISIONS:

	BY	SUBMITTAL / REVISION
DATE		
06/22	TL	ISSUED FOR BIDDING
07/22	JR	REVISED PER ADDENDUM NO. 2

SHAWNEE MUNICIPAL AUTHORITY
SOUTHSIDE IMPROVEMENTS
SHAWNEE, OKLAHOMA

CONCRETE PAVING PLAN

PROJECT NO.	SHN-20-01
DATE	06/22
DRAWN BY:	TL
CHECKED BY:	BW
REVIEWED BY:	DBW
SCALE:	1"=30'

BAR IS ONE INCH ON ORIGINAL DRAWING
0' 1'
IF NOT ONE INCH ON THIS SHEET, ADJUST SCALES ACCORDINGLY

SHEET

C-9

REGISTERED PROFESSIONAL ENGINEER
07/11/22
BRANDON WALL
21108
OKLAHOMA

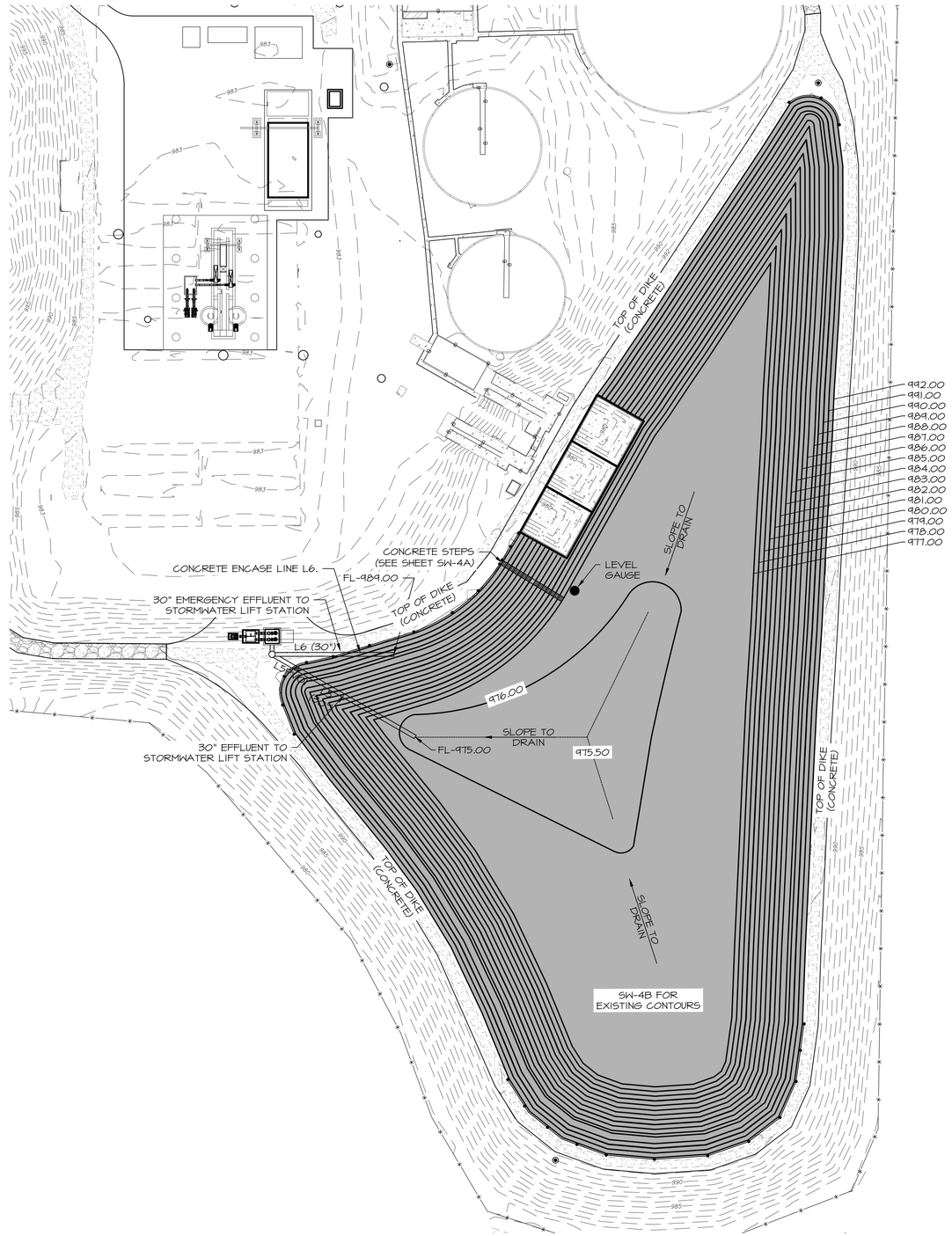

NOTES:

1. ALL CONCRETE SHALL BE 6" THICK.
2. CONTRACTOR SHALL SUBMIT TO THE ENGINEER FOR APPROVAL A JOINT SEALING METHOD FOR ALL CONSTRUCTION JOINTS REQUIRED IN THE CONCRETE LINER.
3. CONTRACTOR SHALL SUBMIT A JOINTING PLAN AND SLAB POURING SEQUENCE FOR APPROVAL BY THE ENGINEER.
4. JOINTS SHALL BE 20'-0" O.C. MAX.
5. THE SECONDARY FLOW EQUALIZATION BASIN SHALL BE EQUIPPED WITH ONE LEVEL GAUGE. THE LEVEL GAUGE SHALL CONSIST OF A 4" Ø 17-FEET LONG STEEL POST. THE POST SHALL HAVE A 2.5 MIL COAT OF TNEMEC 3TH-71 CHEM-PRIME, 4.0 MIL COAT OF TNEMEC SERIES 66 EPOXOLINE, AND ONE COAT OF TNEMEC SERIES 74 HIGH-BUILD ENDURA SHIELD OR EQUAL PAINT SYSTEM. STEEL POST SHALL BE EMBEDDED 3-FEET IN THE GROUND WITH A MINIMUM OF 12" Ø CONCRETE 3-FEET DEEP. LETTERING SHALL CONSIST OF AN ALTERNATING PATTERN OF WHITE BACKGROUND W/BLACK NUMBERS (EVEN NUMERALS) AND BLACK BACKGROUND W/WHITE NUMBERS AT 1-FOOT INTERVALS IN TENTHS FOR A TOTAL OF 14-FEET. LEVEL GAUGE SHALL BE FIELD LOCATED BY THE OWNER.
6. INFLUENT & EFFLUENT PIPE ENDS SHALL BE CUT TO MATCH BASIN SLOPE.
7. CONTRACTOR TO REMOVE AND DISPOSE OF APPROXIMATELY 10,880 C.Y. OF WASTE SLUDGE DOWN TO ELEVATION 974.00'. PER SECTION 31_01_33.
8. SLOPED WALLS & FLOOR TO BE CUT TO GRADES SHOWN & COMPACTED PRIOR TO CONCRETE PLACEMENT. PER SECTION DETAILS.
9. CROWN ROAD 2" @ ℄ ALONG TOP OF DIKE TO PROVIDE DRAINAGE AND ASSURE WATER DOES NOT POND ON ROADWAY.
10. QUANTITIES ARE APPROXIMATE. CONTRACTOR TO FIELD VERIFY PRIOR TO BID.

PRESSURE REDUCING VALVES REMOVED BY ADDENDUM NO. 2

LEGEND

- CONCRETE LINED FLOW EQUALIZATION BASIN (14,510 S.Y.)
- PRESSURE RELIEF VALVE
- LEVEL GAUGE
- PROPOSED FORCE MAIN
- PROPOSED GRAVITY LINE
- PROPOSED GUARDRAIL (525 L.F.)
- SW — STORM WATER PIPING
- PE — PRIMARY EFFLUENT PIPING

WALL ENGINEERING
223 N. WASHINGTON, DURANT, OK 74701
OKLAHOMA CA #6413 EXP. JUNE 30, 2023

SUBMITTAL / REVISIONS:

DATE	BY	SUBMITTAL / REVISION
06/22	TL	ISSUED FOR BIDDING
07/22	JR	REVISED PER ADDENDUM NO. 2

SHAWNEE MUNICIPAL AUTHORITY
SOUTHSIDE IMPROVEMENTS
SHAWNEE, OKLAHOMA

SECONDARY FLOW EQAULIZATION BASIN PLAN, SECTION & DETAILS

PROJECT NO.	SHN-20-01
DATE	06/22
DRAWN BY:	BW
CHECKED BY:	BW
REVIEWED BY:	DBW
SCALE:	1"=40'

BAR IS ONE INCH ON ORIGINAL DRAWING
0" 1"
IF NOT ONE INCH ON THIS SHEET, ADJUST SCALES ACCORDINGLY

REGISTERED PROFESSIONAL ENGINEER
07/1/22
BRANDON WALL
21108
OKLAHOMA

SHEET
SW-4

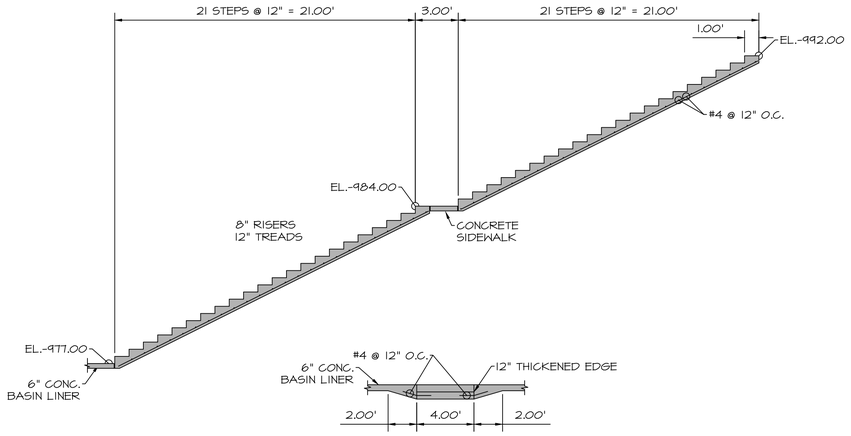

CONCRETE STEPS DETAILS
SCALE 1"=5'

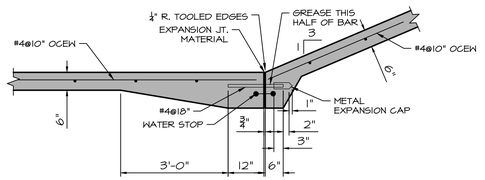

EXPANSION JOINT AT TOE OF SIDESLOPES
SCALE: 1:2

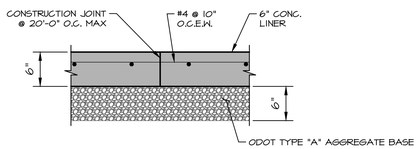

NOTES:
1. CONTRACTOR SHALL BEND ALL BARS AS REQUIRED FOR INSTALLATION.
2. CONTRACTOR SHALL ALTERNATE BARS TO BE CONTINUOUS THROUGH JOINT, STOP ALTERNATE BARS 2" FROM JOINT.
3. CONTRACTOR SHALL PROVIDE 6" PVC CENTER BULB WATER STOP IN JOINTS.
4. ON SIDE SLOPES AND BOTTOM, PROVIDE EXPANSION JTS. @ 50' CTRS. PROVIDE SAWED CONSTRUCTION JTS. @ 10' CTRS. EACH WAY. SUBMIT JOINTING PLAN FOR APPROVAL.

JOINT DETAIL/SECTION
SCALE: N.T.S.

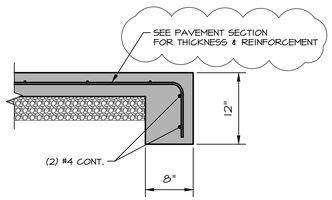

CONCRETE TOP DETAIL
SCALE: 1:1



WALL ENGINEERING
223 N. WASHINGTON, DURANT, OK 74701
OKLAHOMA CA #5413 EXP. JUNE 30, 2023

SUBMITTAL / REVISIONS:

	DATE	BY	SUBMITTAL / REVISION
1	06/22	TL	ISSUED FOR BIDDING
2	07/22	JR	REVISED PER ADDENDUM NO. 2

SHAWNEE MUNICIPAL AUTHORITY
SOUTHSIDE IMPROVEMENTS
SHAWNEE, OKLAHOMA

SECONDARY FLOW EQAULIZATION
BASIN PLAN, SECTION & DETAILS

PROJECT NO.
SHN-20-01
DATE
06/22
DRAWN BY:
TL
CHECKED BY:
BW
REVIEWED BY:
DBW
SCALE:
AS NOTED

BAR IS ONE INCH ON ORIGINAL DRAWING
0" 1"
IF NOT ONE INCH ON THIS SHEET, ADJUST SCALES ACCORDINGLY

SHEET
SW-4A

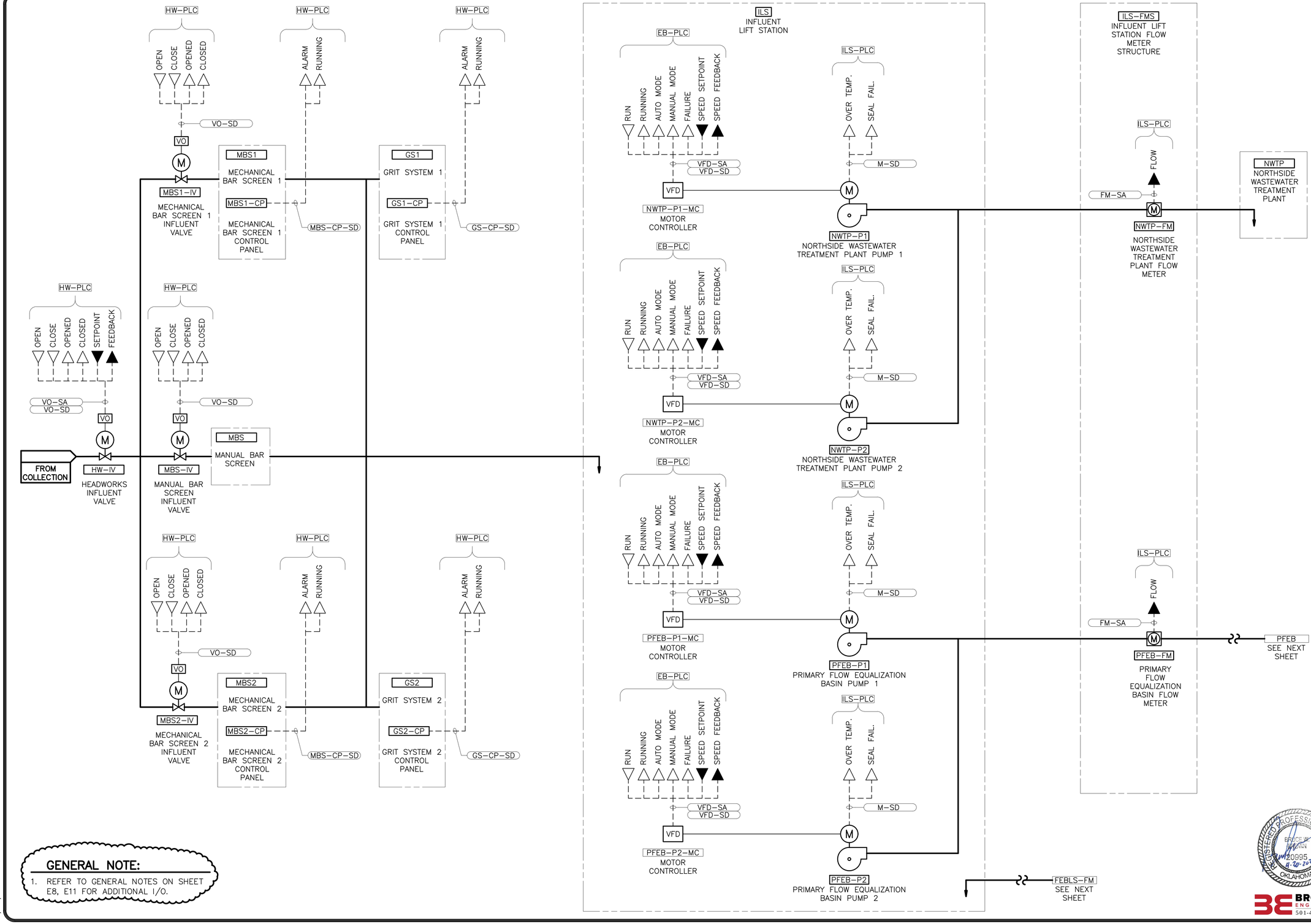

GENERAL NOTE:

1. REFER TO GENERAL NOTES ON SHEET E8, E11 FOR ADDITIONAL I/O.

WALL ENGINEERING
PO BOX 1457, DURANT, OK 74702
OKLAHOMA CA #5413 EXP. JUNE 30, 2021

SUBMITTAL / REVISIONS:

DATE	BY	SUBMITTAL / REVISION

SHAWNEE MUNICIPAL AUTHORITY
SOUTHSIDE WWTP IMPROVEMENTS
SHAWNEE, OKLAHOMA

CONTROL SYSTEM ONE-LINE DIAGRAM I

PROJECT NO.	SHN-20-01
DATE	09/20
DRAWN BY:	CD
CHECKED BY:	BB
REVIEWED BY:	BB
SCALE:	AS SHOWN

BAR IS ONE INCH ON ORIGINAL DRAWING
0" 1"
IF NOT ONE INCH ON THIS SHEET, ADJUST SCALES ACCORDINGLY

REGISTERED PROFESSIONAL ENGINEER
BRUCE W. DAWN
20995
4-20-2021
OKLAHOMA

BROWN ENGINEERS
501-448-0100

SHEET

E4

P:\PRODUCTION\PROJECTS\WALL ENGINEERING (WE)\WE-048 SHAWNEE SOUTHSIDE WWTP\DWG\E04_CONTROL SYSTEM ONE-LINE DIAGRAM I.DWG
7/19/2022 11:34 AM

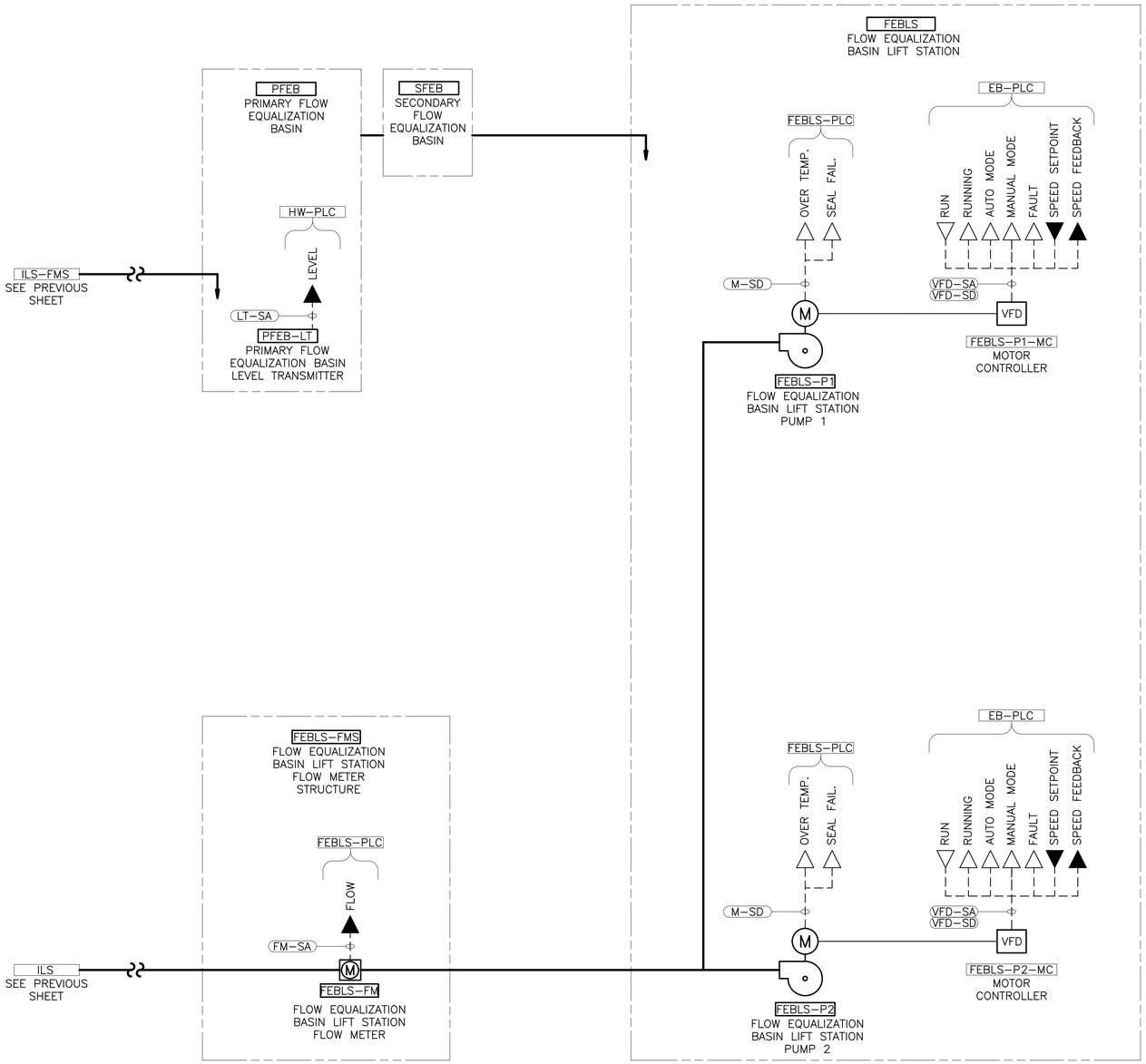

GENERAL NOTE:

1. REFER TO GENERAL NOTES ON SHEET E8, E11 FOR ADDITIONAL I/O.

P:\PRODUCTION\PROJECTS\WALL ENGINEERING (WE)\WE-048 SHAWNEE SOUTHSIDE WWTP\DWG\E05_CONTROL SYSTEM ONE-LINE DIAGRAM II.DWG
7/19/2022 11:34 AM

WALL ENGINEERING
PO BOX 1457, DURANT, OK 74702
OKLAHOMA CA #5413 EXP. JUNE 30, 2021

SUBMITTAL / REVISIONS:

DATE	BY	SUBMITTAL / REVISION

SHAWNEE MUNICIPAL AUTHORITY
SOUTHSIDE WWTP IMPROVEMENTS
SHAWNEE, OKLAHOMA

CONTROL SYSTEM ONE-LINE DIAGRAM II

PROJECT NO.	SHN-20-01
DATE	09/20
DRAWN BY:	CD
CHECKED BY:	BB
REVIEWED BY:	BB
SCALE:	AS SHOWN

BAR IS ONE INCH ON ORIGINAL DRAWING
0" 1"
IF NOT ONE INCH ON THIS SHEET, ADJUST SCALES ACCORDINGLY

SHEET
E5

REGISTERED PROFESSIONAL ENGINEER
BRUCE W. BROWN
20995
8-20-2021
OKLAHOMA

BROWN ENGINEERS
501-448-0100

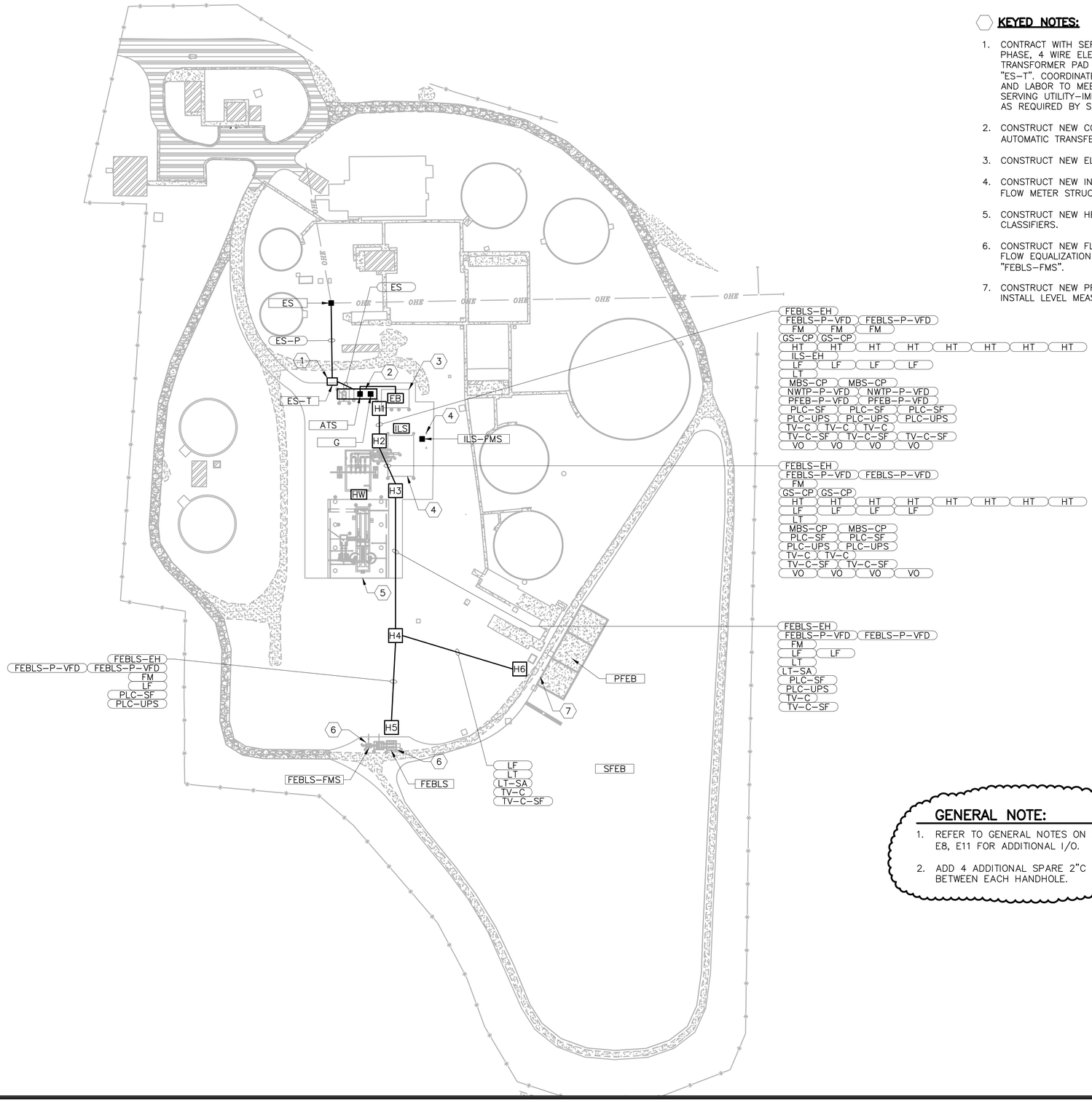

KEYED NOTES:

1. CONTRACT WITH SERVING UTILITY TO INSTALL NEW 480Y/277 VOLT, 3 PHASE, 4 WIRE ELECTRICAL SERVICE. CONSTRUCT NEW CONCRETE TRANSFORMER PAD FOR SERVING UTILITY–FURNISHED TRANSFORMER "ES–T". COORDINATE WITH SERVING UTILITY AND PROVIDE ALL MATERIALS AND LABOR TO MEET ALL SERVING UTILITY REQUIREMENTS. PAY ALL SERVING UTILITY–IMPOSED FEES. CONSTRUCT NEW PRIMARY FEEDER DUCTS AS REQUIRED BY SERVING UTILITY.
2. CONSTRUCT NEW CONCRETE PAD AND INSTALL NEW GENERATOR "G" AND AUTOMATIC TRANSFER SWITCH "ATS".
3. CONSTRUCT NEW ELECTRICAL BUILDING "EB".
4. CONSTRUCT NEW INFLUENT LIFT STATION "ILS" AND INFLUENT LIFT STATION FLOW METER STRUCTURE "ILS–FMS."
5. CONSTRUCT NEW HEADWORKS "HW". INCLUDING BAR SCREENS AND GRIT CLASSIFIERS.
6. CONSTRUCT NEW FLOW EQUALIZATION BASIN LIFT STATION "FEBLS" AND FLOW EQUALIZATION BASIN LIFT STATION FLOW METER STRUCTURE "FEBLS–FMS".
7. CONSTRUCT NEW PRIMARY FLOW EQUALIZATION BASIN IMPROVEMENTS. INSTALL LEVEL MEASUREMENT SYSTEM.

GENERAL NOTE:

1. REFER TO GENERAL NOTES ON SHEET E8, E11 FOR ADDITIONAL I/O.
2. ADD 4 ADDITIONAL SPARE 2"C BETWEEN EACH HANDHOLE.

WALL ENGINEERING
PO BOX 1457, DURANT, OK 74702
OKLAHOMA CA #5413 EXP. JUNE 30, 2021

SUBMITTAL / REVISIONS:

DATE	BY	SUBMITTAL / REVISION

SHAWNEE MUNICIPAL AUTHORITY
SOUTHSIDE WWTP IMPROVEMENTS
SHAWNEE, OKLAHOMA

ELECTRICAL SITE PLAN

PROJECT NO. SHN-20-01
DATE 09/20
DRAWN BY: CD
CHECKED BY: BB
REVIEWED BY: BB
SCALE: AS SHOWN

BAR IS ONE INCH ON ORIGINAL DRAWING
0" 1"
IF NOT ONE INCH ON THIS SHEET, ADJUST SCALES ACCORDINGLY

SHEET
E6

REGISTERED PROFESSIONAL ENGINEER
BRUCE W. BROWN
20995
OKLAHOMA
4-20-2021

BROWN ENGINEERS
501-448-0100

P:\PRODUCTION\PROJECTS\WALL ENGINEERING (WE)\WE-048 SHAWNEE SOUTHSIDE WWTP\DWG\E06_SITE PLAN.DWG
7/19/2022 11:39 AM

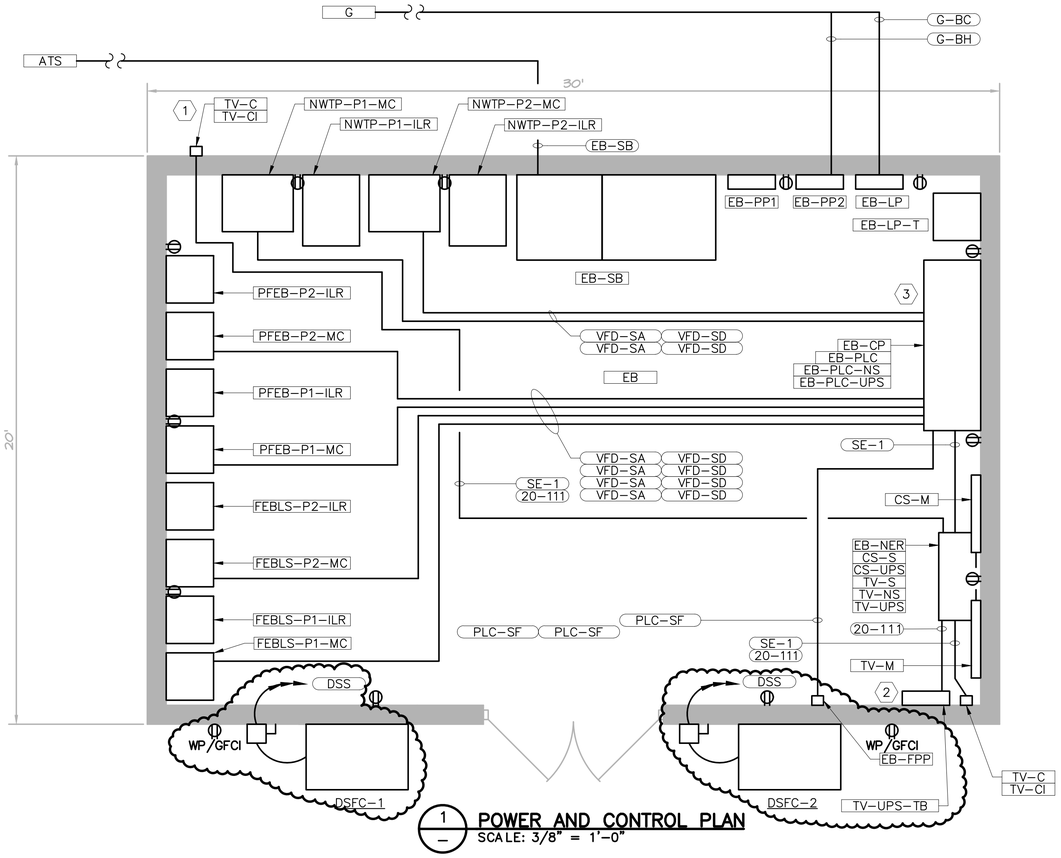

1 — POWER AND CONTROL PLAN
SCALE: 3/8" = 1'-0"

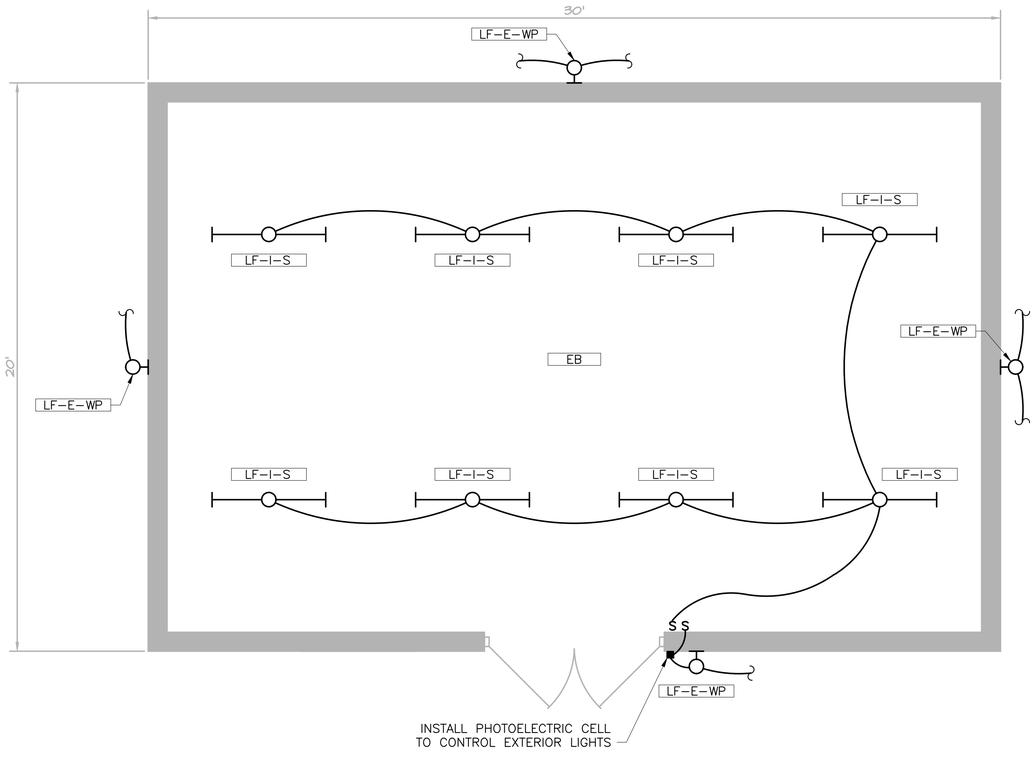

2 — LIGHTING PLAN
SCALE: 3/8" = 1'-0"

KEYED NOTES:

1. MOUNT CAMERA TO PROVIDE VIEW OF ENTRY GATE.
2. TELEVISION FIBER MEDIA CONVERTERS "TV-FMC" LOCATED IN TERMINAL BOX "TV-UPS-TB".
3. CONTROL SYSTEM FIBER MEDIA CONVERTERS "CS-FMC" LOCATED IN CONTROL PANEL "EB-CP"

WALL ENGINEERING
PO BOX 1457, DURANT, OK 74702
OKLAHOMA CA #5413 EXP. JUNE 30, 2021

SUBMITTAL / REVISIONS:

DATE	BY	SUBMITTAL / REVISION

SHAWNEE MUNICIPAL AUTHORITY
SOUTHSIDE WWTP IMPROVEMENTS
SHAWNEE, OKLAHOMA

ELECTRICAL BUILDING PLANS
POWER, CONTROL AND LIGHTING

PROJECT NO.
SHN-20-01
DATE
09/20
DRAWN BY:
CD
CHECKED BY:
BB
REVIEWED BY:
BB
SCALE:
AS SHOWN

BAR IS ONE INCH ON ORIGINAL DRAWING
0' 1'
IF NOT ONE INCH ON THIS SHEET, ADJUST SCALES ACCORDINGLY

SHEET
E7

REGISTERED PROFESSIONAL ENGINEER
BRUCE W. BROWN
20995
OKLAHOMA
4-20-2022

BROWN ENGINEERS
501-448-0100

P:\PRODUCTION\PROJECTS\WALL ENGINEERING (WE)\WE-048 SHAWNEE SOUTHSIDE WWTP\DWG\E07_ELECTICAL BUILDING PLAN.DWG
7/19/2022 12:29 PM

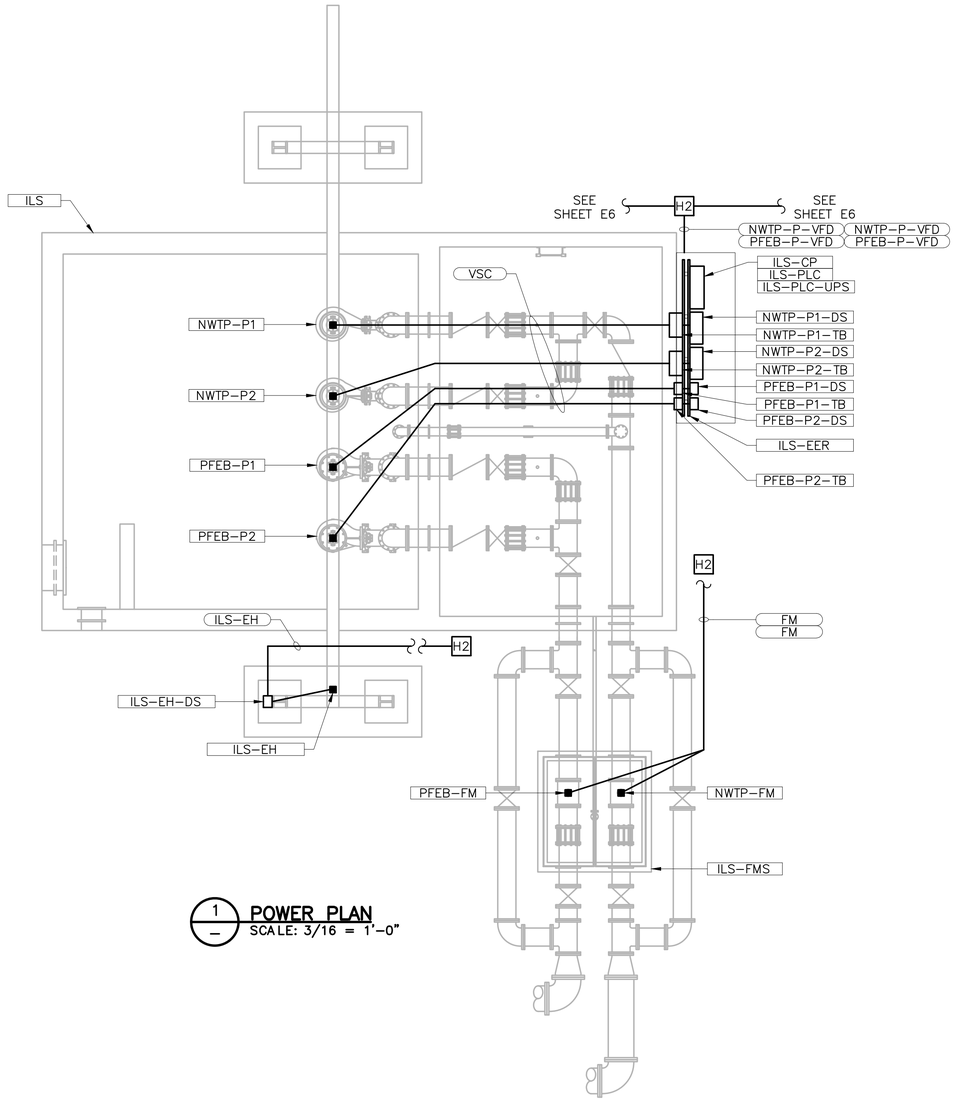

1 POWER PLAN
SCALE: 3/16 = 1'-0"

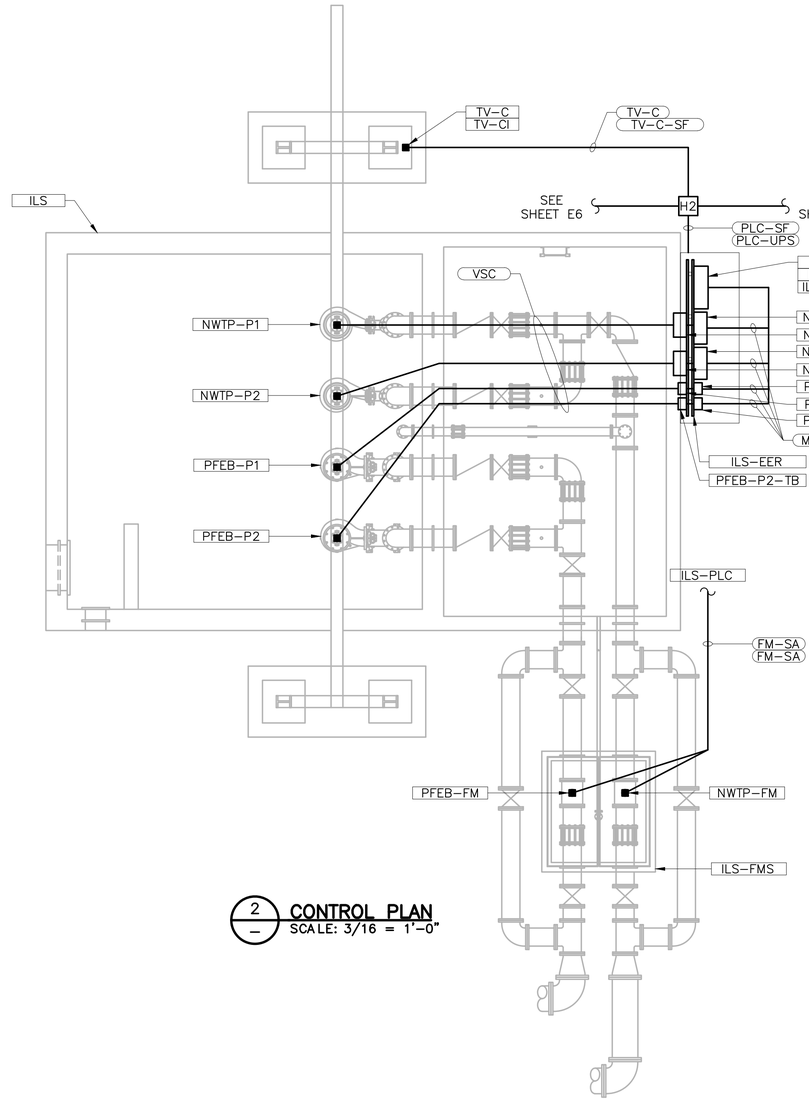

2 CONTROL PLAN
SCALE: 3/16 = 1'-0"

GENERAL NOTES:

1. EACH PUMP DISCHARGE HAS A MOTOR OPERATED DISCHARGE VALVE. FURNISH AND INSTALL (TO EACH OF 4 VALVES) THE FOLLOWING:

   A. (3#10+1#10EG)1"C FROM PP1 TO EACH VALVE.

   B. (6#14)1"C AND (2ISP16)1"C FROM PLC PANEL IN ELECTRICAL BUILDING TO EACH VALVE.

WALL ENGINEERING
PO BOX 1457, DURANT, OK 74702
OKLAHOMA CA #5413 EXP. JUNE 30, 2021

SUBMITTAL / REVISIONS:

DATE	BY	SUBMITTAL / REVISION

SHAWNEE MUNICIPAL AUTHORITY
SOUTHSIDE WWTP IMPROVEMENTS
SHAWNEE, OKLAHOMA

INFLUENT LIFT STATION "ILS" POWER, CONTROL AND LIGHTING PLAN

PROJECT NO.
SHN-20-01
DATE
09/20
DRAWN BY:
CD
CHECKED BY:
BB
REVIEWED BY:
BB
SCALE:
AS SHOWN

BAR IS ONE INCH ON ORIGINAL DRAWING
0" 1"
IF NOT ONE INCH ON THIS SHEET, ADJUST SCALES ACCORDINGLY

SHEET
E8

REGISTERED PROFESSIONAL ENGINEER
BRUCE W. BROWN
20995
8-26-2021
OKLAHOMA

BROWN ENGINEERS
501-448-0100

P:\PRODUCTION\PROJECTS\WALL ENGINEERING (WE)\WE-048 SHAWNEE SOUTHSIDE WWTP\DWG\E08_INFLUENT LS PLANS.DWG
7/19/2022 11:58 AM

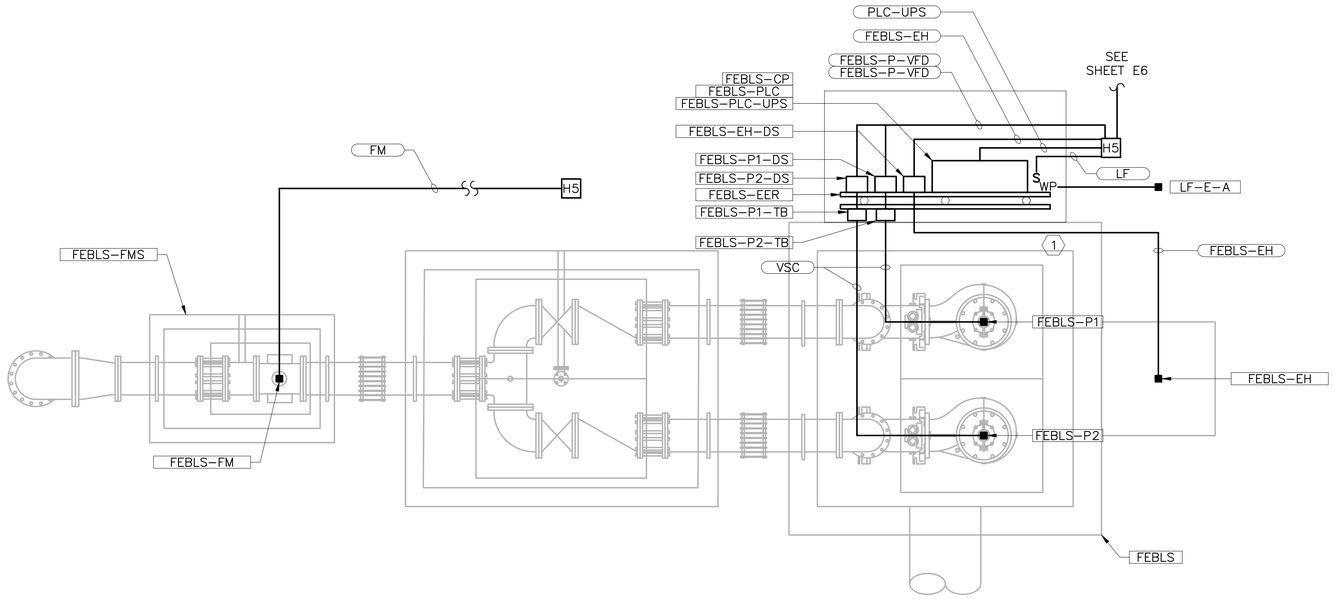

1 — **POWER AND LIGHTING PLAN**
SCALE: 3/8 = 1'-0"

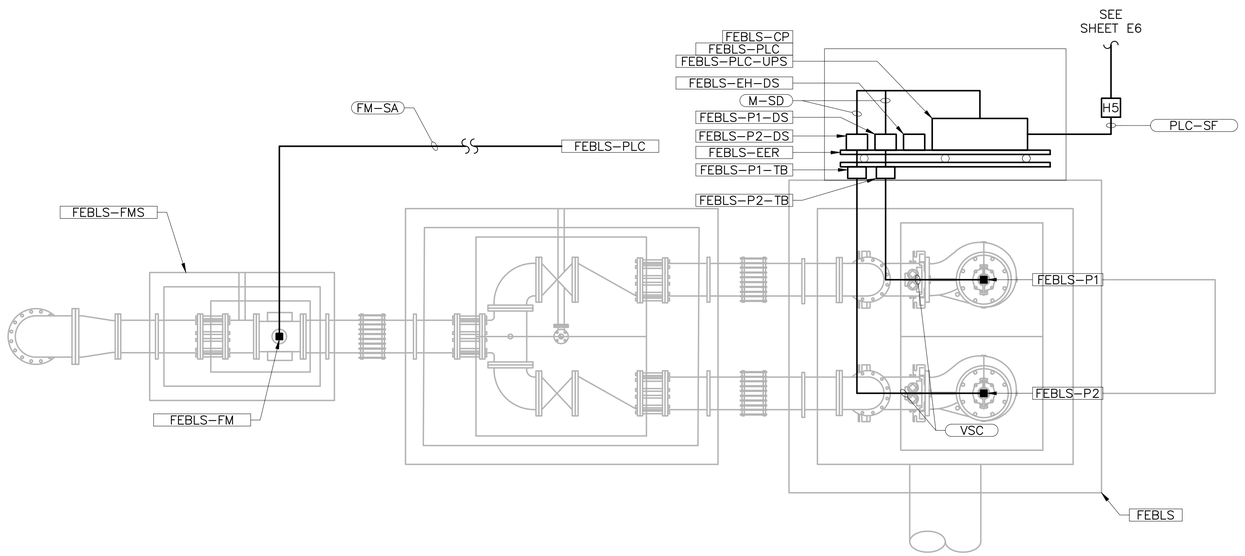

2 — **CONTROL PLAN**
SCALE: 3/8 = 1'-0"

KEYED NOTES:

1. INSTALL SNAP SWITCH IN WEATHERPROOF ENCLOSURE TO CONTROL AREA LIGHT. WHEN SWITCH IS ON, THE AREA LIGHT SHALL BE CONTROLLED BY AND INTEGRATED PHOTOELECTRIC CELL (GEC).

GENERAL NOTES:

1. EACH PUMP DISCHARGE HAS A MOTOR OPERATED DISCHARGE VALVE. FURNISH AND INSTALL (TO EACH OF 3 VALVES) THE FOLLOWING:

   A. (3#10+1#10EG)1"C FROM PP1 TO EACH VALVE.

   B. (6#14)1"C AND (2ISP16)1"C FROM PLC PANEL IN ELECTRICAL BUILDING TO EACH VALVE.

WALL ENGINEERING
PO BOX 1457, DURANT, OK 74702
OKLAHOMA CA #5413 EXP. JUNE 30, 2021

SUBMITTAL / REVISIONS:

DATE	BY	SUBMITTAL / REVISION

SHAWNEE MUNICIPAL AUTHORITY
SOUTHSIDE WWTP IMPROVEMENTS
SHAWNEE, OKLAHOMA

FLOW EQUALIZATION BASIN
RETURN LIFT STATION "FEBLS"
POWER, CONTROL AND LIGHTING PLANS

PROJECT NO.	SHN-20-01
DATE	09/20
DRAWN BY:	CD
CHECKED BY:	BB
REVIEWED BY:	BB
SCALE:	AS SHOWN

BAR IS ONE INCH ON ORIGINAL DRAWING
0" 1"
IF NOT ONE INCH ON THIS SHEET, ADJUST SCALES ACCORDINGLY

SHEET
E11

REGISTERED PROFESSIONAL ENGINEER
BRUCE W. BROWN
20995
8-26-2021
OKLAHOMA

BROWN ENGINEERS
501-448-0100

P:\PRODUCTION\PROJECTS\WALL ENGINEERING (WE)\WE-048 SHAWNEE SOUTHSIDE WWTP\DWG\E11_FLOW EQ BASIN RETURN LS PLANS.DWG
7/19/2022 12:02 PM

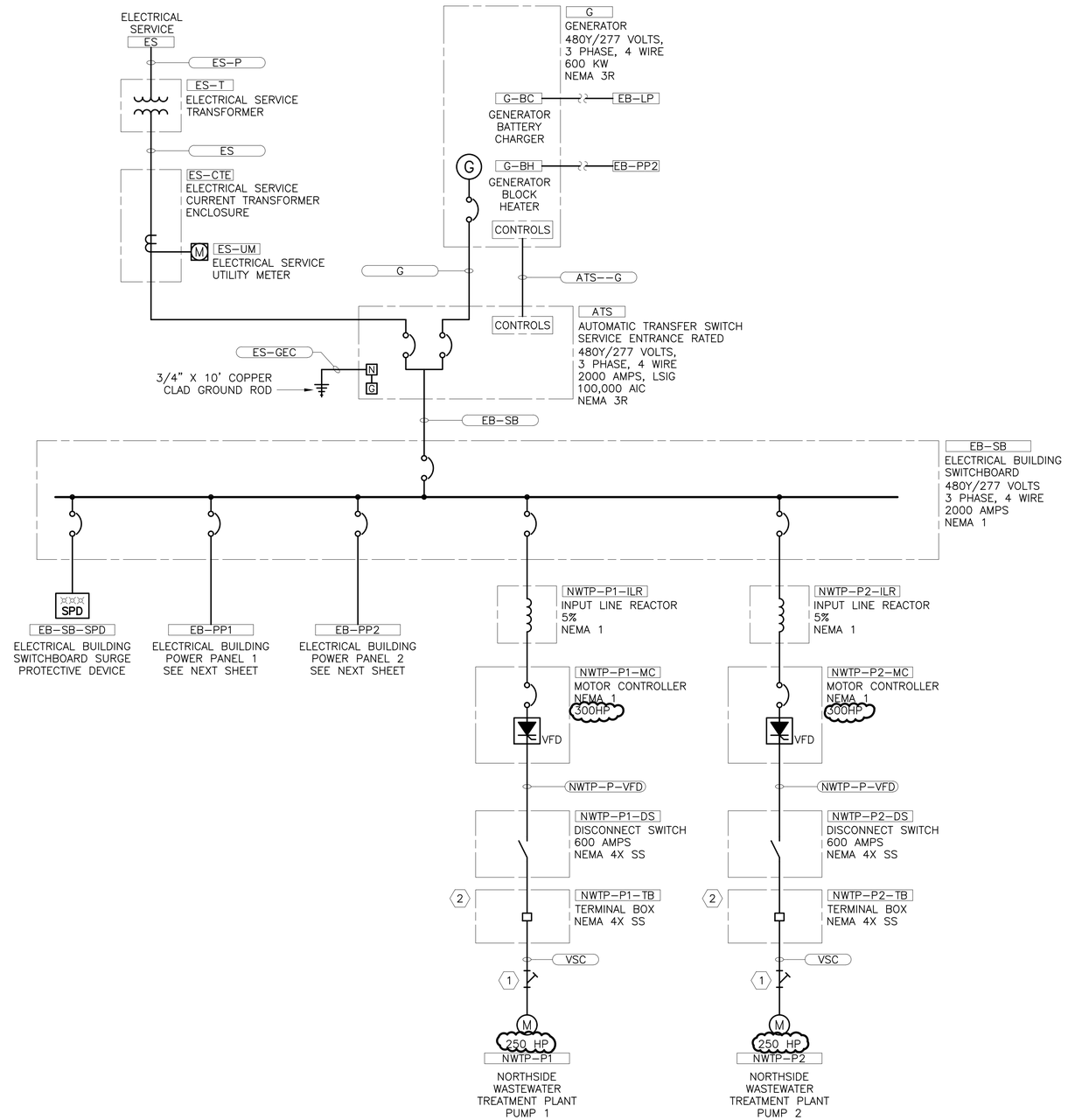

KEYED NOTES:

1. INSTALL CONDUIT SEAL FITTINGS AT HAZARDOUS (CLASSIFIED) LOCATION BOUNDARIES.
2. NEMA 4X SS, CONTINUOUS HINGE, OIL TIGHT, 1/4 TURN SEMI-FLUSH LATCH TERMINAL BOX. TERMINATE VENDOR-SUPPLIED CABLE ON POWER TERMINAL BLOCKS. INSTALL SS STRAIN RELIEF ON ALL CABLES.

WALL ENGINEERING
PO BOX 1457, DURANT, OK 74702
OKLAHOMA CA #5413 EXP. JUNE 30, 2021

SUBMITTAL / REVISIONS:

DATE	BY	SUBMITTAL / REVISION

SHAWNEE MUNICIPAL AUTHORITY
SOUTHSIDE WWTP IMPROVEMENTS
SHAWNEE, OKLAHOMA

POWER SYSTEM ONE-LINE DIAGRAM I

PROJECT NO.	SHN-20-01
DATE	09/20
DRAWN BY:	CD
CHECKED BY:	BB
REVIEWED BY:	BB
SCALE:	AS SHOWN

BAR IS ONE INCH ON ORIGINAL DRAWING
0" 1"
IF NOT ONE INCH ON THIS SHEET, ADJUST SCALES ACCORDINGLY

SHEET
E13

REGISTERED PROFESSIONAL ENGINEER
BRUCE W. BROWN
20995
OKLAHOMA
4-20-22

BROWN ENGINEERS
501-448-0100

P:\PRODUCTION\PROJECTS\WALL ENGINEERING (WE)\WE-048 SHAWNEE SOUTHSIDE WWTP\DWG\E13_POWER SYSTEM ONE-LINE DIAGRAM I.DWG
7/19/2022 12:04 PM

KEYED NOTES:

1. INSTALL CONDUIT SEAL FITTINGS AT HAZARDOUS (CLASSIFIED) LOCATION BOUNDARIES.
2. NEMA 4X SS, CONTINUOUS HINGE, OIL TIGHT, 1/4 TURN SEMI-FLUSH LATCH TERMINAL BOX. TERMINATE VENDOR-SUPPLIED CABLE ON POWER TERMINAL BLOCKS. INSTALL SS STRAIN RELIEF ON ALL CABLES.

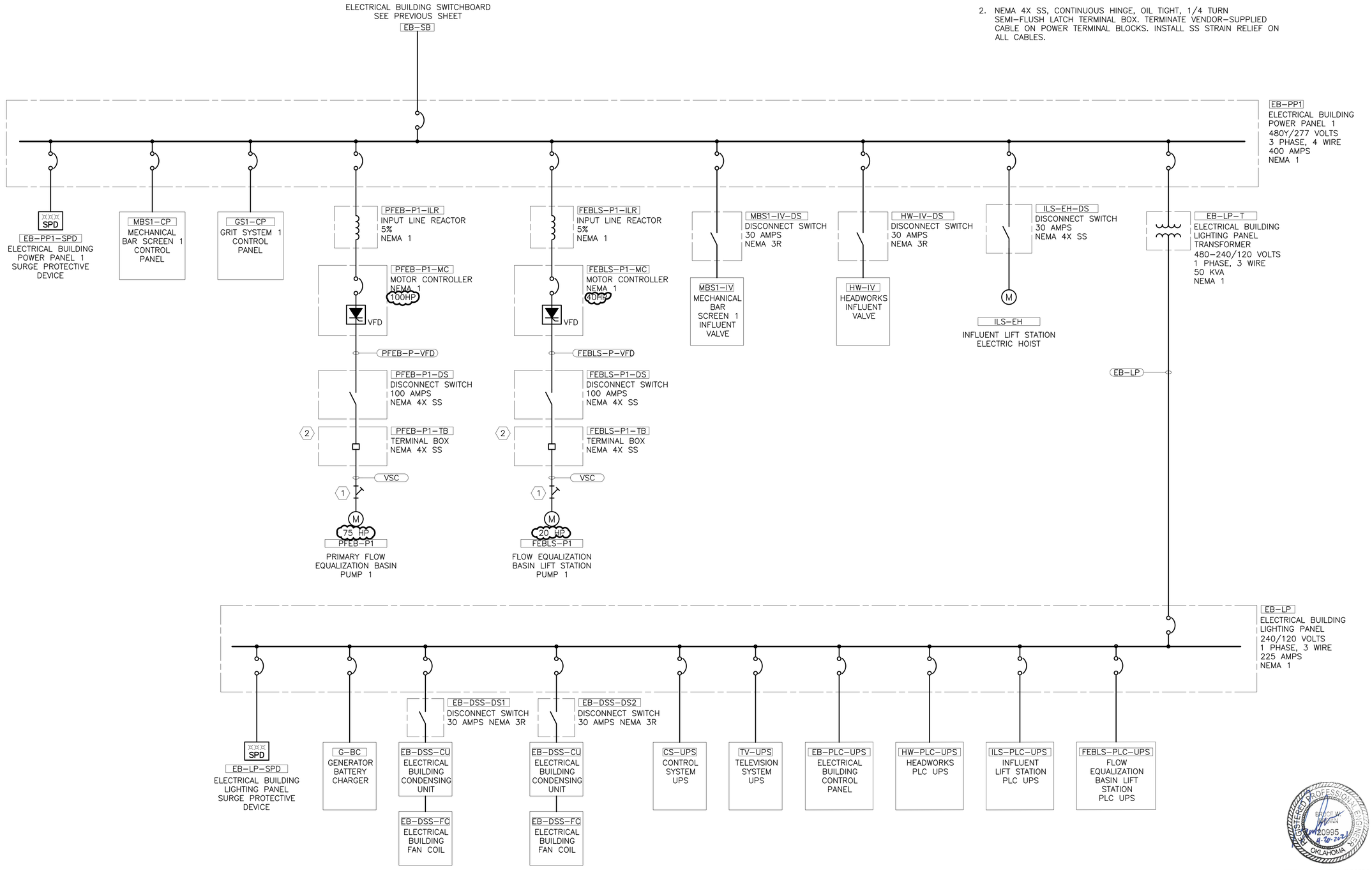

WALL ENGINEERING
PO BOX 1457, DURANT, OK 74702
OKLAHOMA CA #5413 EXP. JUNE 30, 2021

SUBMITTAL / REVISIONS:

DATE	BY	SUBMITTAL / REVISION

SHAWNEE MUNICIPAL AUTHORITY
SOUTHSIDE WWTP IMPROVEMENTS
SHAWNEE, OKLAHOMA

POWER SYSTEM ONE-LINE DIAGRAM II

PROJECT NO.	SHN-20-01
DATE	09/20
DRAWN BY:	CD
CHECKED BY:	BB
REVIEWED BY:	BB
SCALE:	AS SHOWN

BAR IS ONE INCH ON ORIGINAL DRAWING
0" 1"
IF NOT ONE INCH ON THIS SHEET, ADJUST SCALES ACCORDINGLY

SHEET
E14

REGISTERED PROFESSIONAL ENGINEER
BRUCE W. BROWN
20995
9-20-2021
OKLAHOMA

BROWN ENGINEERS
501-448-0100

P:\PRODUCTION\PROJECTS\WALL ENGINEERING (WE)\WE-048 SHAWNEE SOUTHSIDE WWTP\DWG\E14_POWER SYSTEM ONE-LINE DIAGRAM II.DWG
7/19/2022 12:06 PM

KEYED NOTES:

1. INSTALL CONDUIT SEAL FITTINGS AT HAZARDOUS (CLASSIFIED) LOCATION BOUNDARIES.
2. NEMA 4X SS, CONTINUOUS HINGE, OIL TIGHT, 1/4 TURN SEMI-FLUSH LATCH TERMINAL BOX. TERMINATE VENDOR-SUPPLIED CABLE ON POWER TERMINAL BLOCKS. INSTALL SS STRAIN RELIEF ON ALL CABLES.
3. AUXILIARY CONTACT. REFER TO WIRING DIAGRAM.

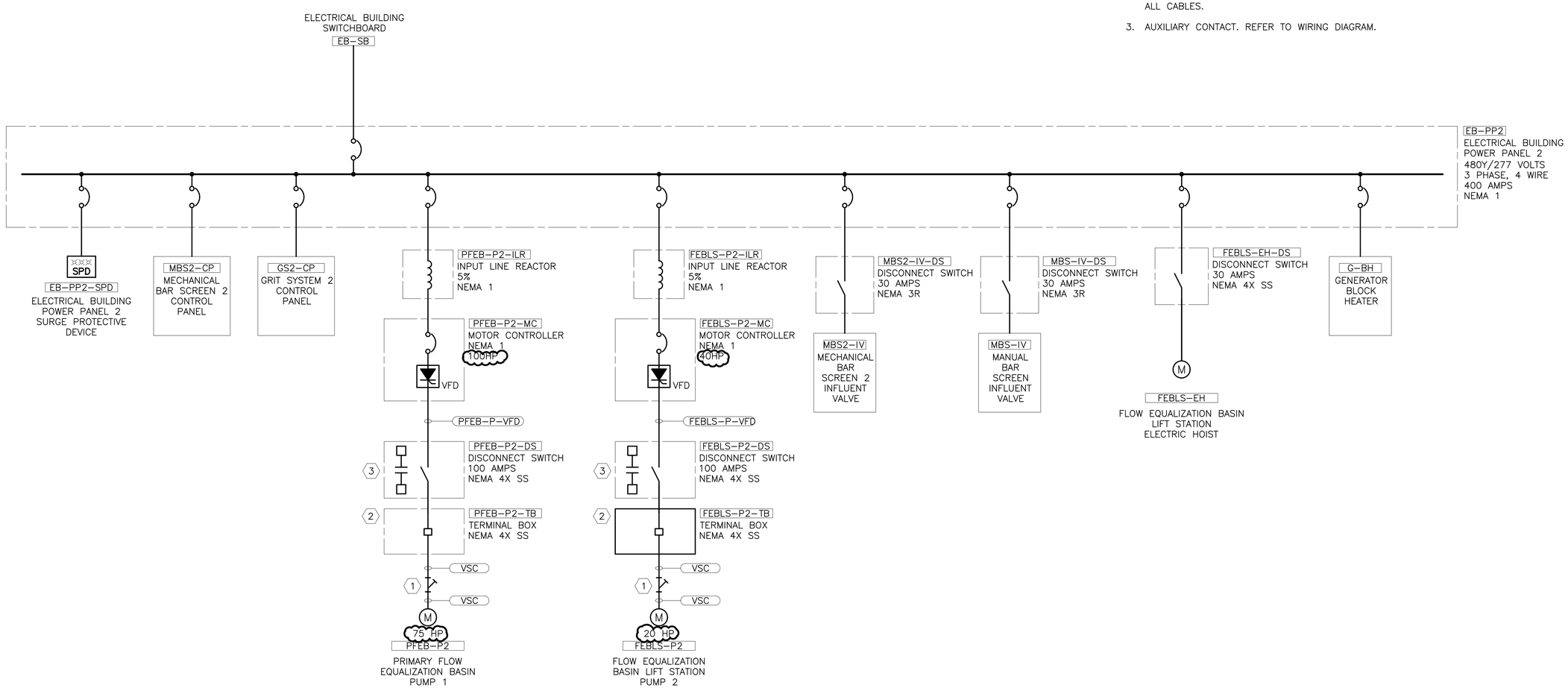

P:\PRODUCTION\PROJECTS\WALL ENGINEERING (WE)\WE-048 SHAWNEE SOUTHSIDE WWTP\DWG\E15_POWER SYSTEM ONE-LINE DIAGRAM III.DWG
7/19/2022 12:08 PM

WALL ENGINEERING
PO BOX 1457, DURANT, OK 74702
OKLAHOMA CA #5413 EXP. JUNE 30, 2021

SUBMITTAL / REVISIONS:

DATE	BY	SUBMITTAL / REVISION

SHAWNEE MUNICIPAL AUTHORITY
SOUTHSIDE WWTP IMPROVEMENTS
SHAWNEE, OKLAHOMA

POWER SYSTEM
ONE-LINE DIAGRAM III

PROJECT NO. SHN-20-01
DATE 09/20
DRAWN BY: CD
CHECKED BY: BB
REVIEWED BY: BB
SCALE: AS SHOWN

BAR IS ONE INCH ON ORIGINAL DRAWING
0' 1'
IF NOT ONE INCH ON THIS SHEET, ADJUST SCALES ACCORDINGLY

REGISTERED PROFESSIONAL ENGINEER
BRUCE W. BROWN
#20995
OKLAHOMA

BROWN ENGINEERS
501-448-0100

SHEET
E15

Switchboard Schedule

General		Main		Circuit Breaker		Bus	
Name	EB–SB	Amps	2000	Trip	2000	Material	Tin Plated Copper
System	480Y/277 Volts, 3 Phase, 4 Wire	Type	MCB	Pole	3	Neutral	100%
Location	Electrical Building			Frame	2000	AIC Rating	100,000
Enclosure	NEMA 1			Type	LSIG		

No.	Description	Note	Hp	Load kVA	Load Amps	Circuit Schedule Id	Circuit Breaker Trip	Pole	Frame	Type
1	SPD "EB–SB–SPD"	–	–	–	–	SPD–3	60	3	100	–
2	Power Panel "EB–PP1"	–	–	133.435	160.50	EB–PP	400	3	600	–
3	Power Panel "EB–PP2"	–		118.415	142.44	EB–PP	400	3	600	–
4	Pump "NWTP–P1"	–	250	344.183	414.00	NWTP–P	800	3	800	–
5	Pump "NWTP–P2"	–	250	344.183	414.00	NWTP–P	800	3	800	–
6	–	–		–	–	–	–	–	–	–
7	–	–	–	–	–	–	–	–	–	–
8	Spare	–	–	–	–	–	60	3	100	–
9	Spare	–	–	–	–	–	400	3	600	–
10	Spare	–	–	–	–	–	700	3	800	–

Design Factor		Design Load, Total Load Basis	
NEC Design Factor	1.2500	Total Load, kVA	940.216
Spare Capacity	1.2500	Total Load, A	1,130.94
Diversity Factor	1.0000	Design Load, kVA	1,469.088
Design Factor	1.5625	Design Load, Amps	1,767.09

Lighting Panel Schedule

General		Main		Circuit Breaker		Bus	
Name	EB–LP	Amps	225	Trip	225	Material	Tin Plated Copper
System	240/120 Volts, 1 Phase, 3 Wire	Type	MCB	Pole	2	Neutral	100%
Location	Electrical Building			Frame	225	AIC Rating	25,000
Enclosure	NEMA 1			Type	–		

No.	Description	Note	Load kVA	Load Amps	Circuit Schedule Id	Circuit Breaker Trip	Pole	Phase	Load kVA	Circuit Breaker Trip	Pole	Circuit Schedule Id	Load Amps	Load kVA	Note	Description	No.
1	SPD "EB–LP–SPD"	–	–	–	SPD–2	60	2	A	0.213	20	1	20–111	1.78	0.213	–	Lights, Exterior	2
3	"	–	–	–	–	–	–	B	0.480	20	1	20–111	4.00	0.480	–	Lights, Interior	4
5	Battery Charger "G–BC"	–	1.200	10.00	G–BC	20	1	A	1.920	20	1	20–111	6.00	0.720	–	Recepts, North	6
7	Spare	–	–	–	–	20	1	B	0.360	20	1	20–111	3.00	0.360	–	Recepts, South	8
9	Spare	–	2.800	–	DSS	30	2	A	0.540	20	1	20–111	4.50	0.540	–	Recepts, East	10
11	Spare	–	2.800	–	–	–	–	B	0.540	20	1	20–111	4.50	0.540	–	Recepts, West	12
13	Heat Trace "HW–HT"	–	1.200	10.00	HT	20	1	A	2.400	20	1	20–111	10.00	1.200	–	UPS "CS–UPS"	14
15	Heat Trace "HW–HT"	–	1.200	10.00	HT	20	1	B	2.400	20	1	20–111	10.00	1.200	–	UPS "TV–UPS"	16
17	Heat Trace "HW–HT"	–	1.200	10.00	HT	20	1	A	2.400	20	1	PLC–UPS	10.00	1.200	–	UPS "HW–PLC–UPS"	18
19	Heat Trace "HW–HT"	–	1.200	10.00	HT	20	1	B	2.400	20	1	PLC–UPS	10.00	1.200	–	UPS "ILS–PLC–UPS"	20
21	Heat Trace "HW–HT"	–	1.200	10.00	HT	20	1	A	2.400	20	1	PLC–UPS	10.00	1.200	–	UPS "FEBLS–PLC–UPS"	22
23	Heat Trace "HW–HT"	–	1.200	10.00	HT	20	1	B	1.350	20	1	LF	1.25	0.150	–	Lighting, "FEBLS"	24
25	Heat Trace "HW–HT"	–	1.200	10.00	HT	20	1	A	1.350	20	1	LF	1.25	0.150	–	Lighting, "PFEB"	26
27	Heat Trace "HW–HT"	–	1.200	10.00	HT	20	1	B	1.320	20	1	FM	1.00	0.120	–	Flow Meter "FEBLS–FM"	28
29	Headworks Lights, Exterior	–	0.427	3.56	–	20	1	A	0.547	20	1	FM	1.00	0.120	–	Flow Meter "NWTP–FM"	30
31	Headworks Lights, Interior	–	0.996	8.30	–	20	1	B	1.116	20	1	FM	1.00	0.120	–	Flow Meter "PFEB–FM"	32
33	Spare	–	2.800	–	–	20	1	A	0.120	20	1	LT	1.00	0.120	–	Level Transmitter "PFEB–LT"	34
35	Spare	–	2.800	–	–	30	2	B	–	20	1	–	–	–	–	Spare	36
37		–	–	–	–	–	–	A	–	20	1	–	–	–	–	Spare	38
39	Spare	–	–	–	–	60	2	B	–	20	1	–	–	–	–	Spare	40
41	"	–	–	–	–	–	–	A	–	20	1	–	–	–	–	Spare	42

Connected Load				
Phase	A	B	C	Total
Load, kVA	17.490	15.560	–	33.050
Current, Amps				
Balance, %				

Design Factor		Design Load, Total Load Basis	
NEC Design Factor	1.2500	Total Load, kVA	33.050
Spare Capacity	1.2500	Total Load, A	
Diversity Factor	1.0000	Design Load, kVA	51.600
Design Factor	1.5625	Design Load, Amps	215.000

Note:
1 Block heater may be 120 or 240 volts. Field verify Existing Generator "X–G" block header and coordinate Circuit Breaker and Circuit to match.

Power Panel Schedule

General		Main		Circuit Breaker		Bus	
Name	EB–PP1	Amps	400	Trip	400	Material	Tin Plated Copper
System	480Y/277 Volts, 3 Phase, 4 Wire	Type	MCB	Pole	3	Neutral	100%
Location	Electrical Building			Frame	600	AIC Rating	65,000
Enclosure	NEMA 1			Type	–		

No.	Description	Note	Hp	Load kVA	Load Amps	Circuit Schedule Id	Circuit Breaker Trip	Pole	Frame	Type
1	SPD "EB–PP1–SPD"	–	–	–	–	SPD–3	60	3	100	–
2	Control Panel "MBS1–CP"	–	–	6.300	7.58	MBS–CP	20	3	100	–
3	Control Panel "GS1–CP"	–	–	26.300	31.63	GS–CP	70	3	100	–
4	Pump "PFEB–P1"	–	75	54.038	65.00	PFEB–P	125	3	100	–
5	Pump "FEBLS–P1"	–	20	17.459	21.00	FEBLS–P	60	3	100	–
6	Valve "MBS1–IV"	–	1	1.746	2.10	VO	15	3	100	–
7	Valve "HW–IV"	–	1	1.746	2.10	VO	15	3	100	–
8	Electric Hoist "ILS–EH"	–	3	3.991	4.80	ILS–EH	15	3	100	–
9	Lighting Panel "EB–LP"	–	–	21.856	45.53	EB–LP–T	150	2	250	–
10	DSFC–1	–	–	–	–	–	30	3	100	–
11	–	–	–	–	–	–	–	–	–	–
12	–	–	–	–	–	–	–	–	–	–
13	–	–	–	–	–	–	–	–	–	–
14	Spare	–	–	–	–	–	15	3	100	–
15	Spare	–	–	–	–	–	20	3	100	–
16	Spare	–	–	–	–	–	40	3	100	–
17	Spare	–	–	–	–	–	60	3	100	–
18	Spare	–	–	–	–	–	70	3	100	–
19	Spare	–	–	–	–	–	100	3	100	–
20	Spare	–	–	–	–	–	150	2	250	–

Design Factor		Design Load, Total Load Basis	
NEC Design Factor	1.2500	Total Load, kVA	133.435
Spare Capacity	1.2500	Total Load, A	160.50
Diversity Factor	1.0000	Design Load, kVA	208.492
Design Factor	1.5625	Design Load, Amps	250.78

* Furnish and install (7) 20A/3P circuit breakers for motor operated valves.

Power Panel Schedule

General		Main		Circuit Breaker		Bus	
Name	EB–PP2	Amps	400	Trip	400	Material	Tin Plated Copper
System	480Y/277 Volts, 3 Phase, 4 Wire	Type	MCB	Pole	3	Neutral	100%
Location	Electrical Building			Frame	600	AIC Rating	65,000
Enclosure	NEMA 1			Type	–		

No.	Description	Note	Hp	Load kVA	Load Amps	Circuit Schedule Id	Circuit Breaker Trip	Pole	Frame	Type
1	SPD "EB–PP2–SPD"	–	–	–	–	SPD–3	60	3	100	–
2	Control Panel "MBS2–CP"	–	–	6.300	7.58	MBS–CP	20	3	100	–
3	Control Panel "GS2–CP"	–	–	26.300	31.63	GS–CP	70	3	100	–
4	Pump "PFEB–P2"	–	75	54.038	65.00	PFEB–P	125	3	100	–
5	Pump "FEBLS–P2"	–	20	17.459	21.00	FEBLS–P	60	3	100	–
6	Valve "MBS2–IV"	–	1	1.746	2.10	VO	15	3	100	–
7	Valve "MBS–IV"	–	1	1.746	2.10	VO	15	3	100	–
8	Electric Hoist "FEBLS–EH"	–	2	2.827	3.40	FEBLS–EH	15	3	100	–
9	Generator Block Heater "G–BH"	–	–	8.000	9.62	G–BH	20	3	100	–
10	DSFC–2	–	–	–	–	–	30	3	100	–
11	–	–	–	–	–	–	–	–	–	–
12	–	–	–	–	–	–	–	–	–	–
13	–	–	–	–	–	–	–	–	–	–
14	–	–	–	–	–	–	–	–	–	–
15	Spare	–	–	–	–	–	15	3	100	–
16	Spare	–	–	–	–	–	20	3	100	–
17	Spare	–	–	–	–	–	40	3	100	–
18	Spare	–	–	–	–	–	60	3	100	–
19	Spare	–	–	–	–	–	70	3	100	–
20	Spare	–	–	–	–	–	100	3	100	–

Design Factor		Design Load, Total Load Basis	
NEC Design Factor	1.2500	Total Load, kVA	118.415
Spare Capacity	1.2500	Total Load, A	142.44
Diversity Factor	1.0000	Design Load, kVA	185.024
Design Factor	1.5625	Design Load, Amps	222.56

WALL ENGINEERING
PO BOX 1457, DURANT, OK 74702
OKLAHOMA CA #5413 EXP. JUNE 30, 2021

SUBMITTAL / REVISIONS:
DATE | BY | SUBMITTAL / REVISION

SHAWNEE MUNICIPAL AUTHORITY
SOUTHSIDE WWTP IMPROVEMENTS
SHAWNEE, OKLAHOMA

POWER SYSTEM
SCHEDULES I

PROJECT NO. SHN-20-01
DATE 09/20
DRAWN BY: CD
CHECKED BY: BB
REVIEWED BY: BB
SCALE: AS SHOWN

BAR IS ONE INCH ON ORIGINAL DRAWING
0" 1"
IF NOT ONE INCH ON THIS SHEET, ADJUST SCALES ACCORDINGLY

SHEET
E16

REGISTERED PROFESSIONAL ENGINEER
BRUCE W. BROWN
20995
8-20-2021
OKLAHOMA

BROWN ENGINEERS
501-448-0100

P:\PRODUCTION\PROJECTS\WALL ENGINEERING (WE)\WE-048 SHAWNEE SOUTHSIDE WWTP\DWG\E16_SCHEDULES I.DWG
7/19/2022 12:23 PM

Circuit Schedule			
Id	Type Id	Circuit	Note
20-111	20-111	(1-#12 PH, 1-#12 N, 1-#12 EGC) 3/4" C	-
ATS--G	SD-10	(10-#14) 3/4" C	1
DSS	30-211	(2-#10 PH, 1-#10 N, 1-#10 EGC) 1" C	-
EB-LP	225-211	(2-4/0 PH, 1-4/0 N, 1-#4 EGC) 2-1/2" C	-
EB-LP-T	150-201	(2-1/0 PH, 1-#6 EGC) 2" C	-
EB-PP	250-301	(3-250 PH, 1-#4 EGC) 3" C	-
EB-SB	2000-311	6 (3-500 PH, 1-500 N, 1-250 EGC) 4" C	-
ES	2000-301	6 (3-500 PH, 1-250 EGC) 4" C	-
ES-GEC	2000-GEC	(1-3/0 GEC) 1" C	-
ES-P	-	6 (Empty) 4" C	2
FEBLS-EH	30-301	(3-#10 PH, 1-#10 EGC) 1" C	-
FEBLS-P	40-301	(3-#4 PH, 1-#8 EGC) 2"C	-
FEBLS-P-VFD	50-VFD	(3-#4 PH, 1-#8 EGC) 2"C	-
FM	20-111	(1-#12 PH, 1-#12 N, 1-#12 EGC) 3/4" C	-
FM-SA	SA-1	(1-#16 STP) 3/4" C	-
G	1000-311	3 (3-500 PH, 1-500 N, 1-2/0 EGC) 4" C	-
G-BC	20-111	(1-#12 PH, 1-#12 N, 1-#12 EGC) 3/4" C	-
G-BH	20-311	(3-#12 PH, 1-#12 N, 1-#12 EGC) 1" C	-
GS-CP	80-301	(3-#4 PH, 1-#8 EGC) 1-1/4" C	-
GS-CP-SD	SD-30	(30-#14) 2" C	-
HT	30-111	(1-#10 PH, 1-#10 N, 1-#10 EGC) 1" C	-
ILS-EH	30-301	(3-#10 PH, 1-#10 EGC) 1" C	-
LF	30-111	(1-#10 PH, 1-#10 N, 1-#10 EGC) 1" C	-
LT	30-111	(1-#10 PH, 1-#10 N, 1-#10 EGC) 1" C	-
LT-SA	SA-1	(1-#16 STP) 3/4" C	-
M-SD	SD-10	(10-#14) 3/4" C	-
MBS-CP	20-111	(1-#12 PH, 1-#12 N, 1-#12 EGC) 3/4" C	-
MBS-CP-SD	SD-30	(30-#14) 2" C	-
NWTP-P	600-301	2 (3-3/0 PH, 1-1/0 EGC) 2" C	-
NWTP-P-VFD	620-VFD	2 (3-3/0 PH, 1-1/0 EGC) 2" C	-
PFEB-P	90-301	(3-#2/0 PH, 1-#6 EGC) 2" C	-
PFEB-P-VFD	115-VFD	(3-#2/0 PH, 1-#6 EGC) 2" C	-
PLC-SF	SF-2	(6-Fiber Optic) 1" C	-
PLC-UPS	30-111	(1-#10 PH, 1-#10 N, 1-#10 EGC) 1" C	-
SE-1	SE-1	(1-Ethernet) 3/4" C	-
SPD-2	60-211	(2-#6 PH, 1-#6 N, 1-#10 EGC) 1-1/4" C	-
SPD-3	60-311	(3-#6 PH, 1-#6 N, 1-#10 EGC) 1-1/4" C	-
TV-C	30-111	(1-#10 PH, 1-#10 N, 1-#10 EGC) 1" C	-
TV-C-SF	SF-2	(2-Fiber Optic) 1" C	-
VFD-SA	SA-2	(2-#16 STP) 1" C	-
VFD-SD	SD-12	(12-#14) 3/4" C	-
VO	20-301	(3-#12 PH, 1-#12 EGC) 3/4" C	-
VO-SA	SA-2	(2-#16 STP) 1" C	-
VO-SD	SD-12	(12-#14) 3/4" C	-
VSC	VSC	VENDOR SUPPLIED CABLE(S)	3

Note:

1 Insulate unused conductors or cables for future use

2 Coordinate quantity and size of conduit with Serving Utility

3 Coordinate quantity and size of conduit with Vendor

Light Fixture Schedule							
Id	Type	Manufacturer	Model	Lamp Type	Voltage	Watts	Note
LF-E-A	Area Light, With 20' Round Tapered Aluminum Pole	Hubbell	CL1-X-60L-U-3K-X-X-DB-7PR	LED	120 - 277	135	1
LF-E-WP	Exterior Wall Pack, LED	Hubbell	PGM3-180L-4K-U-DB-X	LED	120 - 277	48	-
LF-H	Class I, Division I, LED	Crouse Hinds	EVLL-11L-W-X-X-1-/UNV1	LED	120 - 277	112	-
LF-I-S	Interior 4' Strip, LED	Columbia	LCR-4-40-ML-E-U-PAF	LED	120 - 277	72	-

Note:

1 With 20' Round Tapered Aluminum Pole.

WALL ENGINEERING
PO BOX 1457, DURANT, OK 74702
OKLAHOMA CA #5413 EXP. JUNE 30, 2021

SUBMITTAL / REVISIONS:

DATE	BY	SUBMITTAL / REVISION

SHAWNEE MUNICIPAL AUTHORITY
SOUTHSIDE WWTP IMPROVEMENTS
SHAWNEE, OKLAHOMA

POWER SYSTEM SCHEDULES II

PROJECT NO.
SHN-20-01
DATE
09/20
DRAWN BY:
CD
CHECKED BY:
BB
REVIEWED BY:
BB
SCALE:
AS SHOWN

BAR IS ONE INCH ON ORIGINAL DRAWING
0" 1"
IF NOT ONE INCH ON THIS SHEET, ADJUST SCALES ACCORDINGLY

SHEET
E17

REGISTERED PROFESSIONAL ENGINEER
BRUCE W. BROWN
20995
4-20-2021
OKLAHOMA

BROWN ENGINEERS 501-448-0100

P:\PRODUCTION\PROJECTS\WALL ENGINEERING (WE)\WE-048 SHAWNEE SOUTHSIDE WWTP\DWG\E17_SCHEDULES II.DWG
7/19/2022 12:28 PM

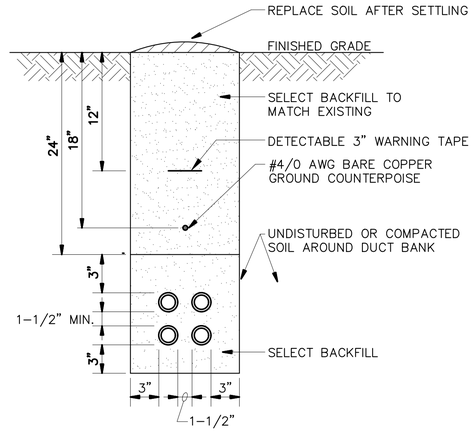

1 — **ELECTRICAL DUCT DETAIL**
SCALE: NONE

ELECTRICAL DUCT NOTES:

1. CONTRACTOR SHALL STAKE THE DUCT INSTALLATION IN PLAN AND ELEVATION FOR NEW ELECTRICAL DUCTS TO AVOID EXISTING UTILITIES.
2. CONTRACTOR SHALL ADJUST THE DEPTH OF THE ELECTRICAL DUCTS AS REQUIRED TO MAINTAIN THE MINIMUM COVER REQUIREMENT INDICATED AND AVOID EXISTING UTILITIES.
3. SIMILAR CONSTRUCTION FOR OTHER DUCT SIZES. SEE DUCT BANK SCHEDULE FOR QUANTITY AND SIZES.
4. INSTALL DUCT CONDUIT SUPPORTS AT 5'–0" O.C. MAXIMUM SPACING (TYPICAL ALL DUCTS).
5. OFFSETS AND BENDS OVER 10 DEGREES AND ELBOWS IN PVC CONDUIT RUNS SHALL BE CGRS CONDUIT.
6. NO PVC SHALL EMERGE FROM THE GROUND OR CONCRETE SLAB OR ENCASEMENT, PVC SHALL CONVERT TO CGRS CONDUIT PRIOR TO ITS EMERGENCE.
7. INSTALL GROUND RODS AT ENDS OF ELECTRICAL DUCT OR CONNECT TO GROUND RING.
8. INSTALL CONDUCTORS AND CABLES AS NOTED ON DRAWING. INSTALL PULLWIRE IN ALL SPARE DUCTS.
9. MINIMUM COVER REQUIREMENT FOR DUCT BANKS UNDER ROADS, DRIVEWAYS AND PARKING LOTS SHALL BE 24".
10. MINIMUM COVER REQUIREMENTS FOR ELECTRICAL SECONDARY SERVICE DUCT BANKS SHALL BE 30".
11. MINIMUM COVER REQUIREMENTS FOR ELECTRICAL PRIMARY SERVICE DUCT BANKS SHALL BE 36".

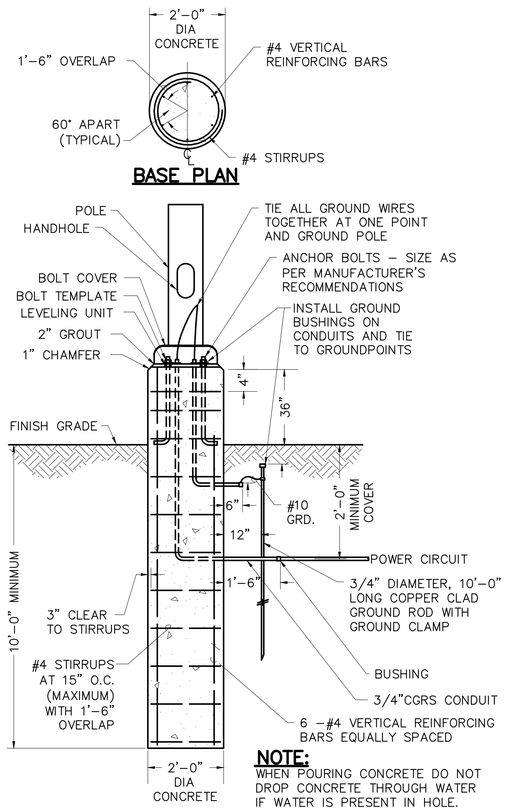

BASE PLAN

BASE ELEVATION

NOTE:
WHEN POURING CONCRETE DO NOT DROP CONCRETE THROUGH WATER IF WATER IS PRESENT IN HOLE.

3 — **LIGHT POLE BASE DETAILS**
SCALE: NONE

1. VERIFY BOLT CIRCLE AND MOUNTING WITH MANUFACTURER

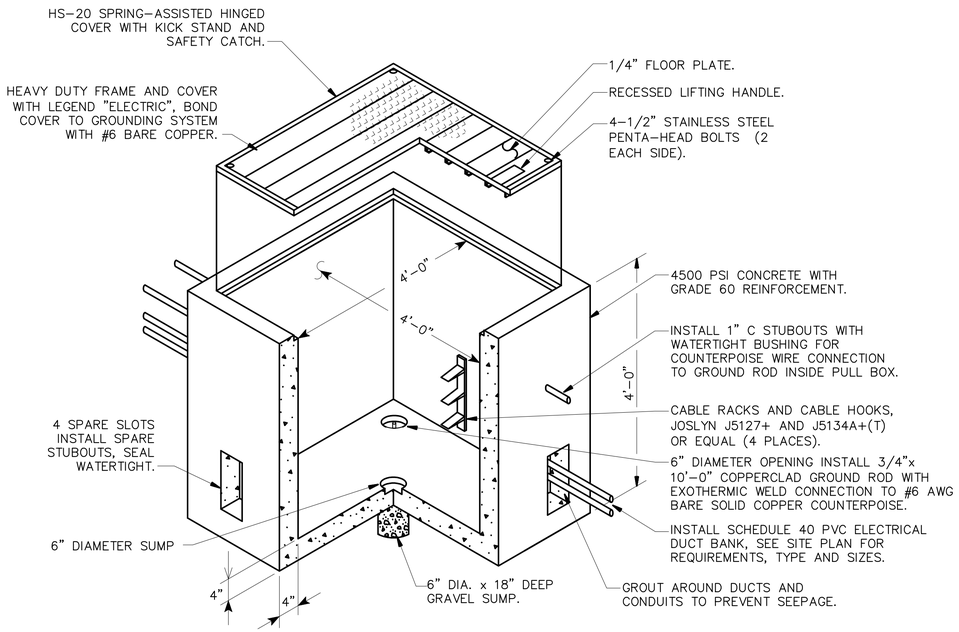

2 — **PREFABRICATED CONCRETE PULL BOX**
SCALE: NONE

GENERAL NOTE:

1. MINIMUM SIZE OF PULL BOX SHALL BE PER NEC.

NOTES:

1. EACH CABLE SHALL BE IDENTIFIED WITH BRADY WIRE MARKER GIVING CIRCUIT NUMBER (#PWC–PK–6 OR APPROVED EQUAL).
2. ALL CABLE THROUGH BOX SHALL HAVE SUFFICIENT SLACK SO CABLE CAN BE BROUGHT TO SURFACE FOR SPLICING, MINIMUM 5' SLACK CABLE LOOP.
3. COVER AND PULL BOX SHALL BE DESIGNED FOR A 60 KIPS CONCENTRATED WHEEL LOAD OVER A 12" x 24" AREA.
4. GROUND ROD INSIDE OF PULL BOX SHALL BE DRIVEN PRIOR TO PLACEMENT OF BOX AND CAST IN BOTTOM OF BOX. IT WILL NOT BE CONNECTED TO ANY CIRCUIT.
5. PROVIDE HANDHOLES WITH 2–4"C SCHEDULE 40 PVC SPARE STUBOUTS IN EACH FACE, EXTENDED 3' MINIMUM BEYOND HANDHOLE, CAPPED WATERTIGHT.
6. EXCAVATION AND BACKFILL NECESSARY FOR THE CONSTRUCTION OF THE HANDHOLE SHALL BE PERFORMED IN ACCORDANCE WITH THE SPECIFICATION REQUIREMENTS.
7. PROVIDE WATERTIGHT CONDUIT BUSHING AND WATERTIGHT SEALS FOR ALL DIRECT BURIED COUNTERPOISE ENTERING THE HANDHOLE VIA A CONDUIT STUBOUT.
8. HANDHOLE COVER SHALL BE 1" MAXIMUM ABOVE FINISHED GRADE. AREA SURROUNDING HANDHOLE SHALL BE GRADED TO DRAIN AWAY FROM HANDHOLE.
9. BOND AND GROUND COVER AND FRAME TO ROD USING BRAIDED COPPER GROUND STRAP EQUIVALENT AMPACITY TO #6 AWG COPPER WIRE.
10. GRADE THE AREA AROUND THE HANDHOLE 10' IN ALL DIRECTIONS SUCH TO PREVENT WATER AND DIRT ACCUMULATION ACROSS THE TOP OF THE COVER AND ALLOW WATER TO DRAIN AWAY FROM THE HANDHOLE.

WALL ENGINEERING
PO BOX 1457, DURANT, OK 74702
OKLAHOMA CA #5413 EXP. JUNE 30, 2021

SUBMITTAL / REVISIONS:
DATE | BY | SUBMITTAL / REVISION

SHAWNEE MUNICIPAL AUTHORITY
SOUTHSIDE WWTP IMPROVEMENTS
SHAWNEE, OKLAHOMA

ELECTRICAL DETAILS III

PROJECT NO.	SHN-20-01
DATE	09/20
DRAWN BY:	CD
CHECKED BY:	BB
REVIEWED BY:	BB
SCALE:	AS SHOWN

BAR IS ONE INCH ON ORIGINAL DRAWING
0" 1"
IF NOT ONE INCH ON THIS SHEET, ADJUST SCALES ACCORDINGLY

SHEET
E22

REGISTERED PROFESSIONAL ENGINEER — BRADLEY W. BROWN — 20995 — 8-27-2021 — OKLAHOMA

BROWN ENGINEERS
501-448-0100

P:\PRODUCTION\PROJECTS\WALL ENGINEERING (WE)\WE-048 SHAWNEE SOUTHSIDE WWTP\DWG\E22_DETAILS III.DWG
5/4/2021 8:59 AM

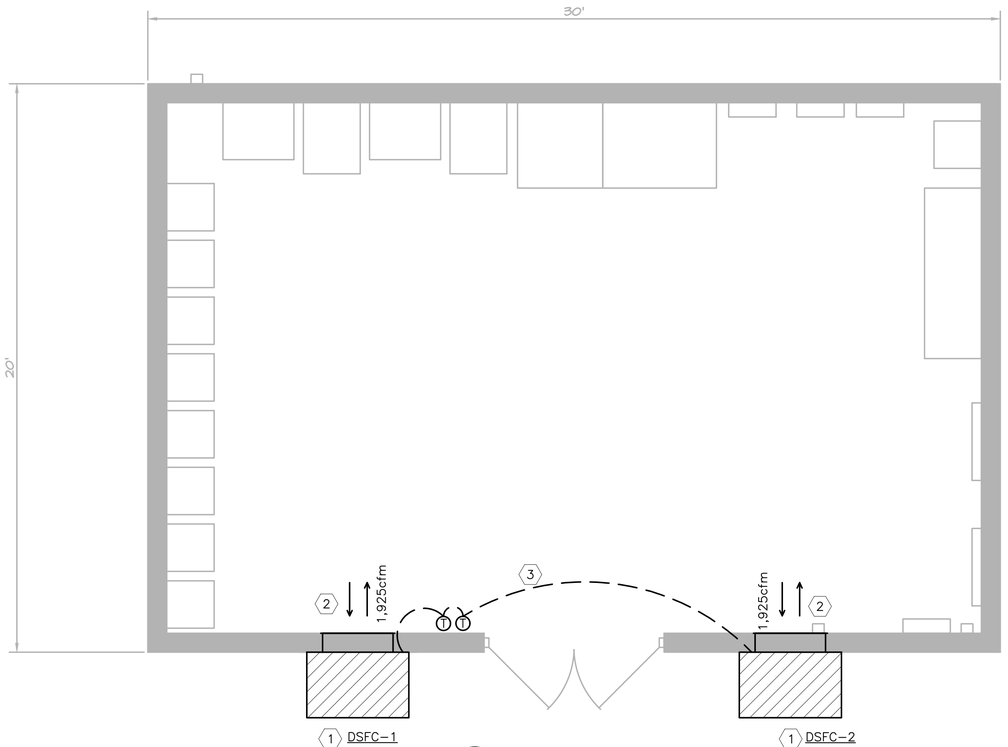

1 BUILDING HVAC PLAN
SCALE: 3/8" = 1'-0"

HVAC THERMOSTAT SETTINGS:

MOUNT ALL THERMOSTATS AT APPROX. 44" PER ADA REQUIREMENTS. SET ALL THERMOSTATS ASSOCIATED WITH HVAC EQUIPMENT PER THE FOLLOWING:

1. TWPU-1,2: 80°F COOLING. 65°F HEATING.

PROVIDE LEAD/LAG CONTROLLER FOR TWPU-1,2 THERMOSTATS EQUAL TO MARVAIR COMMSTAT 3. LEAD/LAG CHANGEOVER SHALL BE EVERY 7 DAYS.

KEYED NOTES:

1. THROUGH WALL PACKAGED UNIT EQUAL TO MARVAIR MGA2072AD090A++2+3CW+1. PROVIDE WITH MANUFACTURER'S 7-DAY PROGRAMMABLE WALL-MOUNT THERMOSTAT AND LEAD-LAG CONTROLS INTERLOCK KIT. COMPRESSORS SHALL BE 2-STAGE R-410A. SYSTEMS SHALL EACH PROVIDE A MINIMUM OF 45,000MBH SENSIBLE COOLING CAPACITY AT 105°F AMBIENT TEMPERATURE WITH LOW AMBIENT COOLING, FAN CYCLE CONTROL, AND EVAPORATOR FREEZE SENSOR OPTIONS. UNITS SHALL HAVE SINGLE POINT POWER AND OPERATE ON 480/3PH POWER, AND REQUIRE 28 MCA AND 30 MOCP. UNITS SHALL HAVE 9kW EMERGENCY STRIP HEAT.

   PROVIDE EXTERNAL P-TRAP PER MANUFACTURER'S RECOMMENDED METHODS AND DISCHARGE TO LANDSCAPING AWAY FROM DOORWAY.

   MOUNT BOTTOM OF UNITS 8" ABOVE FINISH GRADE, MINIMUM. PROVIDE

2. PROVIDE UNITS WITH REVERSE FLOW CONFIGURATION, WITH RETURN GRILL HIGH AND SUPPLY GRILLE LOW. DUCT THROUGH EXTERIOR WALL AND TERMINATE WITH MANUFACTURER'S STANDARD SUPPLY AND RETURN GRILLES AND WASHABLE RETURN AIR FILTER.

3. ROUTE CONTROL WIRING IN CONDUIT, TYPICAL ALL.

GENERAL NOTES:

1. ALL MECHANICAL WORK SHALL COMPLY WITH ALL LOCAL CODES, DRAWINGS, SPECIFICATIONS, AND AUTHORITIES HAVING JURISDICTION. IF DISCREPANCIES ARE FOUND, THE MOST STRINGENT REQUIREMENT SHALL GOVERN WORK. WHERE INSPECTIONS ARE REQUIRED BY AUTHORITIES HAVING JURISDICTION, WORK MUST NOT BE CONCEALED UNTIL INSPECTIONS AND TESTING ARE COMPLETE AND WORK IS ACCEPTED.

2. REFER TO SPECIFICATIONS AND PROJECT MANUAL FOR ADDITIONAL INFORMATION AND REQUIREMENTS.

3. REFER TO ALL PROJECT DRAWINGS FOR DETAILS OF CONSTRUCTION AND INSTALLATION REQUIREMENTS.

4. PRIOR TO BID, CONTRACTOR SHALL BECOME THOROUGHLY FAMILIAR WITH THE REQUIREMENTS OF THESE NOTES AS WELL AS OTHER NOTES SHOWN ON THE CONTRACT DOCUMENTS.

5. THESE DRAWINGS REFLECT A SYSTEM DESIGNED AROUND SPECIFIED REFERENCE PRODUCTS, THE SELECTION OF WHICH HAS INFLUENCED THE DESIGNS OF OTHER TRADES. IF SUBSTITUTE MANUFACTURERS, SIZES, OR MODEL NUMBERS ARE BID OR SUBMITTED, IT IS THE RESPONSIBILITY OF THE CONTRACTOR TO COORDINATE ALL DIFFERENCES PRIOR TO BID. ALL COSTS OF ALL TRADES ASSOCIATED WITH THE SUBSTITUTION SHALL BE INCLUDED IN THE BID.

6. COORDINATION OF ALL MODIFICATIONS TO EACH DISCIPLINE WHICH RESULT FROM SUBSTITUTION OF EQUIPMENT OR MATERIALS SHALL BE THE RESPONSIBILITY OF THE CONTRACTOR. SUBSTITUTIONS WHICH ARE INSTALLED AND SUBSEQUENTLY ARE PROVEN UNSATISFACTORY BY OWNER AND/OR ENGINEER WITHIN THE WARRANTY PERIOD, SHALL BE REMOVED COMPLETELY BY THE CONTRACTOR AND REPLACED WITH THE ORIGINAL DESIGN OR CORRECTED AS DIRECTED BY THE ENGINEER WITHOUT ADDITIONAL COST TO THE OWNER.

7. ALL DRAWINGS ARE DIAGRAMMATIC AND INDICATE THE GENERAL ARRANGEMENTS OR GEOMETRICAL RELATIONSHIPS OF EQUIPMENT AND SERVICES. THEY ARE NOT INTENDED TO SPECIFY OR SHOW EVERY OFFSET, SEQUENCE, DEVICE, OPTION, FITTING, OR COMPONENT.

8. INFORMATION AND COMPONENTS ON DETAILS OR IN SPECIFICATIONS, BUT NOT SHOWN ON PLANS, AND VICE VERSA, SHALL BE PROVIDED AS IF EXPRESSLY REQUIRED BY BOTH.

9. CONTRACTOR SHALL NOT SCALE DRAWINGS. DRAWINGS SPECIFIC TO THIS DISCIPLINE DO NOT LIMIT THE RESPONSIBILITY OF WORK REQUIRED BY THE CONTRACT DOCUMENTS.

10. SEE CIVIL AND STRUCTURAL DRAWINGS FOR BUILDING DETAILS AND DIMENSIONS. COORDINATE PLACEMENT OF MECHANICAL SYSTEMS WITH CIVIL AND STRUCTURAL TRADES.

11. CONTRACTOR SHALL BE RESPONSIBLE FOR COORDINATING ALL WORK WITH THAT OF OTHER TRADES. REFER TO ALL CONSTRUCTION DOCUMENTS FOR COMPLETE INFORMATION PRIOR TO BID.

12. CONTRACTOR SHALL BE RESPONSIBLE FOR FLASHING AND SEALING OF ALL WALL PENETRATIONS AIR AND WATER TIGHT.

13. CLOSELY COORDINATE FINAL LOCATIONS OF INSTALLED EQUIPMENT TO ACHIEVE THE GREATEST ACCESSIBILITY FOR MAINTENANCE PURPOSES.

14. ALL EQUIPMENT, DEVICES, AND FIXTURES SHALL BE INSTALLED AS PER MANUFACTURER'S RECOMMENDATION.

15. CONTRACTOR SHALL VERIFY CLOSELY AT SITE TRANSPORTATION OF NEW HVAC EQUIPMENT INTO MECHANICAL AREAS BEFORE BIDDING. PROVIDE COMPLETE DISASSEMBLY AND RE-ASSEMBLY OF NEW EQUIPMENT AS REQUIRED FOR A COMPLETE INSTALLATION.

16. COORDINATE FINAL PLACEMENT OF ALL THERMOSTATS WITH WALL-MOUNTED DEVICES AND OWNER'S REPRESENTATIVE. MOUNT PER A.D.A. REQUIREMENTS. ANY THERMOSTAT THAT IS REQUIRED TO BE MOUNTED ON AN EXTERIOR WALL SHALL BE MOUNTED ON AN INSULATED PAD.

17. CONTRACTOR SHALL PATCH ALL WALLS, FLOORS, AND CEILINGS TO MATCH NEW FOR ALL OPENINGS CREATED BY INSTALLATION OF EQUIPMENT AND HVAC SERVICE PENETRATIONS.

18. ALL HVAC COMPONENTS WITH ELECTRICAL REQUIREMENTS SHALL BE INSTALLED WITH ELECTRICAL INFRASTRUCTURE NECESSARY TO PROVIDE A FULLY FUNCTIONING SYSTEM. IF NOT SPECIFICALLY SHOWN ON ELECTRICAL SCHEDULE, HVAC FIXTURES REQUIRING ELECTRICAL SERVICE SHALL BE FED FROM BREAKER OF ADEQUATE CAPACITY.

19. ALL CONTROL WIRING SHALL BE INSTALLED IN CONDUIT.

20. ALL EQUIPMENT, DEVICES AND ACCESSORIES SHALL BE INSTALLED PER THE MANUFACTURER'S RECOMMENDATIONS.

21. ALL EQUIPMENT, DEVICES, AND ACCESSORIES SHALL NOT BE INSTALLED IN AREAS WHICH INTERFERE WITH OTHER BUILDING SYSTEMS, EQUIPMENT OR PERSONNEL.

22. ALL HVAC COMPONENTS WITH ELECTRICAL REQUIREMENTS SHALL BE INSTALLED WITH ELECTRICAL INFRASTRUCTURE NECESSARY TO PROVIDE A FULLY FUNCTIONING SYSTEM. IF NOT SPECIFICALLY SHOWN ON ELECTRICAL SCHEDULE, HVAC EQUIPMENT REQUIRING ELECTRICAL SERVICE SHALL BE FED FROM BREAKER OF ADEQUATE CAPACITY.

WALL ENGINEERING
PO BOX 1457, DURANT, OK 74702
OKLAHOMA CA #5413 EXP. JUNE 30, 2021

SUBMITTAL / REVISIONS:
DATE | BY | SUBMITTAL / REVISION

SHAWNEE MUNICIPAL AUTHORITY
SOUTHSIDE WWTP IMPROVEMENTS
SHAWNEE, OKLAHOMA

ELECTRICAL BUILDING
HVAC PLAN

PROJECT NO. SHN-20-01
DATE 09/20
DRAWN BY: CD
CHECKED BY: BB
REVIEWED BY: BB
SCALE: AS SHOWN

BAR IS ONE INCH ON ORIGINAL DRAWING
0" 1"
IF NOT ONE INCH ON THIS SHEET, ADJUST SCALES ACCORDINGLY

SHEET
M1

MELANIE C. RICHARDSON
No. 31764
OKLAHOMA
5.19.22
BROWN ENGINEERS
501-448-0100

P:\PRODUCTION\PROJECTS\WALL ENGINEERING (WE)\WE-048 SHAWNEE SOUTHSIDE WWTP\DWG\M01_MECHANICAL BUILDING PLAN.DWG
7/12/2022 10:44 AM

WALL ENGINEERING, LLC
223 N Washington Ave
Durant, OK 74702
Ph: 580-924-1800

ADDENDUM NO. 3

TO: ALL PLAN HOLDERS

RE: Shawnee Wastewater System Improvements

DATE: 07/23/22

The Plans, Specifications and Contract Documents for the above referenced project are hereby modified / clarified as follows.

Please note that changes made to the plans/specs added by addendum will only contain a summary of changes in addendum verbiage and may not contain all modifications. It is the Contractor's responsibility to thoroughly review the revised sheets/specs.

GENERAL

A3-1 Modification: Replace bid proposal with the revised.

Should you have any additional questions about the above modifications and their intent, please post to the CivCast website.

Issued by:
Wall Engineering, LLC



Brandon Wall, P.E.
President

BID FORM SECTION 5.01 - BID PROPOSAL - ATTACHMENT "A" (ADDM 3) SUMMARY OF BID PRICING (ALL BLANKS MUST BE FILLED)	
SECTION	**BID PRICE**
GENERAL BID ITEMS	
NORTHSIDE	
COLLECTION SYSTEM LIFT STATIONS	
SOUTHSIDE	
CONVEYANCE	
TOTAL PROJECT BID PRICE	

I, General Contractor, do hereby certify that the above TOTAL BID PRICE stated above constitutes all labor, equipment and materials for a complete and operable system as defined by the Contract Documents. Additionally, I certify that any items not specifically outined have been included in the most applicable item, that no items are outstanding that would require an addition to the stated TOTAL BID PRICE, and that TOTAL BID PRICE is not conditional in any manner and constitutes the Lump Sum for completion of work for a complete and operable system as defined by the Contract Documents.

BY:_____ TITLE_____ DATE:_____

BID FORM SECTION 5.01 - BID SUMMARY SHEET - ATTACHMENT "A" (ADDM 3) GENERAL ITEMS APPLYING TO NORTHSIDE, SOUTHSIDE & CONVEYANCE					
#	**Bid Item, Complete per Plans & Specifications**	**Unit**	**Quantity**	**Cost/Unit**	**Total Cost**
1	SWPPP & Erosion Control	LSUM	1		
2	Mobilization, Demobilization, Bonds & Insurance	LSUM	1		
3	Construction Staking	LSUM	1		
4	Construction Traffic Control	LSUM	1		
5	Trench Safety System	LSUM	1		
6	Materials Testing & Disinfection	LSUM	1		
7	CCTV Security System	LSUM	1		
8	Waste Sludge Handling & Disposal from Existing Treatment Units Prior to Final Demolition (Northisde & Southside)	CY	16000		
9	Hydroexcavation for Utilities Location	LF	7500		
10	Dewatering	LSUM	1		
11	Work Change Directives	ALW	N/A	N/A	$523,525.00
12	New Electrical Service Extensions & Transformers	ALW	N/A	N/A	$241,290.00
13	Lab Equipment	ALW	N/A	N/A	$87,830.00
14	Furniture, Fixtures & Equipment	ALW	N/A	N/A	$186,870.00
15	Rock Removal	ALW	N/A	N/A	$240,975.00
SUBTOTAL - GENERAL ITEMS					

BID FORM SECTION 5.01 - BID PROPOSAL - ATTACHMENT "A" (ADDM 3) NORTHSIDE					
#	**Bid Item, Complete per Plans & Specifications**	**Unit**	**Quantity**	**Cost/Unit**	**Total Cost**
16	Headworks	1	LSUM		
17	Influent Lift Station including Flow Meter Structure	1	LSUM		
18	Headworks & Influent Lift Station Cover & Bridge Crane	1	LSUM		
19	SBR Pre-Equalization Basin	1	LSUM		
20	SBR Flow Control Structure including SBR Transfer Pumps	1	LSUM		
21	Sequencing Batch Reactor System (SBR)	1	LSUM		
22	SBR Post-Equalization Basin	1	LSUM		
23	UV Disinfection & Non-Potable Water System with Building	1	LSUM		
24	Flow Measurement - Parshall Flume	1	LSUM		
25	Effluent Lift Station w/ Cascade Aeration	1	LSUM		
26	Effluent Lift Station Cover & Hoist	1	LSUM		
27	Effluent Lift Station Flow Meter Stucture	1	LSUM		
28	Waste Sludge Pump Station (WAS)	1	LSUM		
29	Aerobic Digester (AD)	1	LSUM		
30	SBR/AD Blowers	1	LSUM		
31	SBR/AD Blower Building	1	LSUM		
32	Belt Filter Press & Sludge Loading with Building	1	LSUM		
33	Wet Weather Flow Equalization Basin (FEB)	1	LSUM		

BID FORM SECTION 5.01 - BID PROPOSAL - ATTACHMENT "A" (ADDM 3) NORTHSIDE					
#	**Bid Item, Complete per Plans & Specifications**	**Unit**	**Quantity**	**Cost/Unit**	**Total Cost**
34	FEB Return Lift Station	1	LSUM		
35	FEB Return Lift Station Flow Meter Stucture	1	LSUM		
36	Administration/Lab/Electrical Building	1	LSUM		
37	Yard Piping	1	LSUM		
38	Controls & Instrumentation including SCADA	1	LSUM		
39	Electrical	1	LSUM		
40	Standby Power Generator w/ ATS (15 KW)	1	LSUM		
41	Standby Power Generator w/ ATS (1750 KW)	1	LSUM		
42	Site Grading & Drainage	1	LSUM		
43	Site Concrete Paving	1	LSUM		
44	Security fencing, Gates & Signs	1	LSUM		
45	Landscaping	1	LSUM		
46	Demolition (Initial) including Sludge Disposal	1	LSUM		
47	Demolition (Final) NOT inlcuding Sludge Disposal	1	LSUM		
				SUBTOTAL - NORTHSIDE	

BID FORM SECTION 5.01 - BID PROPOSAL - ATTACHMENT "A" COLLECTION SYSTEM LIFT STATIONS					
#	**Bid Item, Complete per Plans & Specifications**	**Unit**	**Quantity**	**Cost/Unit**	**Total Cost**
48	Collection System Lift Station Controls & SCADA	1	LSUM		
SUBTOTAL - COLLECTION SYSTEM LIFT STATIONS					

BID FORM SECTION 5.01 - BID PROPOSAL - ATTACHMENT "A" SOUTHSIDE					
#	**Bid Item, Complete per Plans & Specifications**	**Unit**	**Quantity**	**Cost/Unit**	**Total Cost**
49	Headworks	1	LSUM		
50	Headworks Cover & Hoist	1	LSUM		
51	Influent Lift Station	1	LSUM		
52	Flow Meter Structure	1	LSUM		
53	Primary FEB Including Concrete Lining	1	LSUM		
54	FEB Return Lift Station	1	LSUM		
55	FEB Return Lift Station Flow Meter Stucture	1	LSUM		
56	Secondary FEB Including Concrete Lining & Sludge Disposal	1	LSUM		
57	Yard Piping	1	LSUM		
58	Backflow Preventer w/ Enclosure	1	LSUM		
59	Controls & Instrumentation including SCADA	1	LSUM		
60	Electrical	1	LSUM		
61	Electrical/Controls Buidling	1	LSUM		
62	Standby Power Generator w/ ATS (600 KW)	1	LSUM		
63	Site Grading & Drainage	1	LSUM		
64	Site Concrete Paving	1	LSUM		
65	Site Gravel Surface	1	LSUM		
66	Landscaping	1	LSUM		
67	Demolition (Initial) including Sludge Disposal	1	LSUM		

BID FORM SECTION 5.01 - BID PROPOSAL - ATTACHMENT "A" SOUTHSIDE					
#	**Bid Item, Complete per Plans & Specifications**	**Unit**	**Quantity**	**Cost/Unit**	**Total Cost**
68	Demolition (Final) NOT inlcuding Sludge Disposal	1	LSUM		
				SUBTOTAL - SOUTHSIDE	

BID FORM SECTION 5.01 - BID PROPOSAL - ATTACHMENT "A" (ADDM 3) CONVEYANCE					
#	**Bid Item, Complete per Plans & Specifications**	**Unit**	**Quantity**	**Cost/Unit**	**Total Cost**
69	Sewermain Restoration (See 01_29_00)	1	LSUM		
70	Site Preparation (See 01_29_00)	1	LSUM		
71	Special Survey for Easement Staking (See 01_29_00)	1	LSUM		
72	SUE Subsurface Utility Engineering (See 02_21_20)	1	LSUM		
73	24" DR11 HDPE Forcemain (Direct Bury)	1	LSUM		
74	24" DR11 HDPE Forcemain (Bore, No Encasement)	1	LSUM		
75	24" DR11 HDPE Forcemain (Bore, HDPE Encasement)	1	LSUM		
76	24" DR11 HDPE Forcemain (Bore, Steel Encasement)	1	LSUM		
77	Combination Air/Vac Valve in Vault (24")	1	LSUM		
78	Combination Air/Vac Valve in Vault (30")	1	LSUM		
79	30" DR11 HDPE Forcemain (Direct Bury)	1	LSUM		
80	30" DR11 HDPE Forcemain (Bore, No Encasement)	1	LSUM		
81	Connect 30" HDPE to Existing 24" DI Sewermain (24"x30" Wye)	1	LSUM		
				SUBTOTAL - CONVEYANCE	

WALL ENGINEERING, LLC
223 N Washington Ave
Durant, OK 74702
Ph: 580-924-1800

ADDENDUM NO. 4

TO: ALL PLAN HOLDERS

RE: Shawnee Wastewater System Improvements

DATE: 07/26/22

The Plans, Specifications and Contract Documents for the above referenced project are hereby modified / clarified as follows.

Please note that changes made to the plans/specs added by addendum will only contain a summary of changes in addendum verbiage and may not contain all modifications. It is the Contractor's responsibility to thoroughly review the revised sheets/specs.

General

A4 – 1 Modification: The time of completion for the project is hereby extended as follows:

The Work shall be substantially complete within 1,095 days (36 months) after the date when the Contract Times commence to run as provided in Paragraph 4.01 of the General Conditions, and completed and ready for final payment in accordance with Paragraph 15.06 of the General Conditions within 1,275 days (42 months) after the date when the Contract Times commence to run.

All other provisions relating to time of completion remain the same.

Conveyance

A4 – 2 Clarification: All steel encased boring will be auger bore.

Should you have any additional questions about the above modifications and their intent, please post to the CivCast website.

Issued by:
Wall Engineering, LLC



Brandon Wall, P.E.
President

Shawnee Municipal Authority Wastewater System Improvements

Company	Company Type	Contact Name	Contact Phone	Contact Fax	Email
Wynn Construction Co., Inc.	General Contractor	Wynn Construction	405-753-1120	405-753-1159	bid@wynnconstruction.com
Ramsey Ward Electric	SubContractor	Rusty Gillispie	580-220-4218		rusty@ramseyward.com
Downey Contracting LLC	General Contractor	Rick Morris	4054785277		rmorris@downeycontracting.com
Downey Contracting, LLC	General Contractor	Day Zimbelman	4054785277		bids@downeycontracting.com
Macaulay Controls	Supplier	Brent Morgan	817-372-9442		bmorgan@macaulaycontrols.com
Dodge Data & Analytics	Plan Room	Dodge Bidding	817-375-2953	800-768-5594	dodge.bidding@construction.com
ConstructConnect	Plan Room	Michael Stubbs	800-364-2059	866-570-8187	content@constructconnect.com
Prime Vendor Inc.	Plan Room	Bid Clerk Bid Clerk	800-746-9554	800-746-8307	govtbids@prime-vendor.com
Victaulic - Infrastructure	Manufacturer	Jose Luis Duran	2143990225		joseluis.duran@victaulic.com
Orr Construction	General Contractor	Bob Quillin	4054810253		Bob@Orrconstructionok.com
Thalle Construction	General Contractor	Brad Miller	940-391-2788		blmiller@thalle.com
ePlan	Plan Room	Jacob Corbin	5734477130	5733555404	eplan@eplanbidding.com
Whipps Inc	Supplier	Alison Tracy	9782497924	9782493072	alisont@whipps.com
Marsau Enterprises Inc	SubContractor	Terry Alexander	580-541-3441		terry.alexander@marsauenterprises.com
Shawver & Son, Inc.	SubContractor	Kyle Williamson	405-525-9451		kyle.williamson@shawver.net
HAYNES EQUIPMENT CO	Supplier	JOE MOSSAUER	4057551357		JOE@HAYNES-EQUIPMENT.COM
Timco Blasting & Coatings	General Contractor	Marsha Fox	9182984080	9183679466	mfox@truefireproofing.com
Ferguson Waterworks	Supplier	Heath Boren	405-672-3828	405-672-5622	heath.boren@ferguson.com
Velocity Constructors Inc	General Contractor	Michael Giron	3039847800	3039847802	mgiron@velocityci.com
Hartwell Environmental Corp	Supplier	Heather Almond	817-446-9500		halmond@hartwellenv.com
Commerce Controls	SubContractor	Mike Scoffins	2489713780		mjscoffins@commercecontrols.com
Adaptaspace	Manufacturer	Eugene Armbruster	403 8882855		earmbruster@adaptaspace.com
Underground Solutions	Supplier	Shawn Garcia	8173206582	8583453736	ugsiae@ugsi.us
Aqua-Aerobic	Manufacturer	Sarah Villacorta	8156542501	8156542508	svillacorta@aqua-aerobic.com
Pioneer Supply	Supplier	Tyler Belt	14057947705		tbelt@pioneersupplyok.com
BELT Construction of Texas	General Contractor	Kyle Bass	870-772-7216	870-772-7233	david@beltinc.com
Prime Controls, LP	Engineer	Kirsten Dirsch	9722214849	9724204842	k.dirsch@prime-controls.com
Sigma Industries, Inc	Supplier	Syed Kamal	303-782-6944	303-782-6964	sigmaind2003@yahoo.com
SOUTHWEST CONSTRUCTION NEWS	Plan Room	Thressie Terrell	918-493-5066	918-493-5069	thressie@swcnews.com
FERGUSON PLANT DIVISION	Supplier	VANESA GARZA	210-662-4902	210-662-4825	vanesa.garza@ferguson.com
Krapff Reynolds Construction Co.	General Contractor	Wade Vakulick	405-733-9682	405-516-0081	wade@krapff-reynolds.com
Cortrol Process Systems, Inc	Supplier	Tammy Collins	918-445-5205	918-446-8812	tcollins@cortrol.com

Shelley Electric, Inc.	SubContractor	Jodi DeGraffenried	13169458311		jodi@shelleyelectric.com
R Bruce Consulting	Supplier	Robert Larrabee	972-345-5857		rbruce2805@gmail.com
Environmental Improvements	Supplier	Melissa Ledger	972-436-2536		mledger@ei2dallas.com
North America Procurement Council Inc., PBC	Other	Eric Johnson	302-450-1923	302-450-1925	sourcemanagement@napc.me
Fortiline	Supplier	Endi Sztamenits	817-366-3340	817-478-6140	endi.sztamenits@fortiline.com
Tesco Controls, Inc.	Supplier	Rich Ercolini	225-910-4573		rercolini@tescocontrols.com
ISCO	Supplier	Will Vodak	2813806554		will.vodak@isco-pipe.com
Aerzen USA	Manufacturer	Garrett Braun	281-702-3726		garrett.braun@aerzen.com
Core & Main	Supplier	Nathan Fraley	303-877-8079		nathan.fraley@coreandmain.com
Hartwell Environmental	Supplier	Rachael Slavik	8174469500		rslavik@hartwellenv.com
Thalle Construction Co., Inc.	General Contractor	Lisa Harris	8177283891		lharris@thalle.com
Pro-Pipe	SubContractor	Kyle Rivenburg	2107607307		kyle.rivenburg@pro-pipe.com
Elastizell of St. Louis	SubContractor	Steven Berecz	3147054550		steve@elastizellstl.com
Burrus & Matthews, Inc.	Other	Riley Chambers	6159465050		rchambers@b-m.com
Mersino Dewatering	SubContractor	Alexus Comeaux	281.860.0808		Alexus.comeaux@mersino.com
Longhorn Burnt Orange Oil Supply	Manufacturer	Jimbo Jenkins	6028884652		arthurfamily2636@gmail.com
Oscar Renda Contracting Inc.	General Contractor	Janie Rodriguez	817-491-2703	817-491-0035	janie@southlandholdings.com
Smith Pump Company	Supplier	Matt Ramburger	1-254-776-0377	1-254-399-8274	mattr@smithpump.com
Wetherbee Electric, Inc.	SubContractor	David McPeak	4052362606		dmcpeak@wetherbeeinc.com
Tensar	Manufacturer	Daniel Bocanegra	6785986431		dbocanegra@tensarcorp.com
Horizontal Boring & Tunneling Company	SubContractor	Brent Moore	402-266-5347	402-266-5591	horizontalboring@hbttrenchless.com
Enviromental Improvements, INC.	Supplier	Alan Johnson	214-970-4414		ajohnson@ei2dallas.com
beta	Engineer	gary savanyu	972-774-1200		gary@betainc.us
Del-Sha Construction, LLC	General Contractor	Tommy Keepes	4792622670	4792622671	bryanr@delsha.net
watetap inc	General Contractor	kevin johnson	2489210112		kevin@watertapinc.com
CSE, W-Industries	General Contractor	Michael Clasen	713-466-9463		michael_clasen@w-industries.com
Freese & Nichols, Inc.	Engineer	Brian Glynn	8328568053		brian.glynn@freese.com
W. Brown Enterprises	General Contractor	Mark Rollins	4056202348	580-924-8226	wbrownenterprises@yahoo.com
Pioneer Supply	Supplier	Randahl Lillard	405-794-7705	405-794-3124	rlillard@pioneersupplyok.com
Downey Contracting, LLC	General Contractor	Denice Fuksa	405-478-5277	405-478-5269	dfuksa@downeycontracting.com
McGuire Brothers Construction	General Contractor	Rodney Madden	918-224-2764	918-224-4996	rmadden@mcguirebrothers.com
Aqua-Aerobic Systems, Inc.	Supplier	Cheryl Bell	815-639-4444		cbell@aqua-aerobic.com
K&A Steel LLC	SubContractor	Ariel Fraire	817-894-4260		ariel@kasteelllc.com
Tank and Vessel Builders, LP	SubContractor	Darryl Harris	325-854-8450 Ext. 101	325-854-8451	dharris@tankandvesselbuilders.com

Badger Meter	Manufacturer	Sarah Guzman	346-412-0771		SGuzman@badgermeter.com
Vector Controls and Automation Group	Supplier	Jerry Ray	9189279324		JERRY.RAY@VECTORCAG.COM
S.J. Louis Construction of Texas, LTD.	General Contractor	Jeff Whitman	(214) 949-0078		jeffw@sjlouis.com
Gajeske, Inc.	Supplier	Jacques Pryor	713-688-2728		web.admin@gajeske.com
Vector Controls	Supplier	Bruce Philpy	9724224388	972-422-1743	bphilpy@vectorcag.com
Victaulic	Manufacturer	Steven Gabriel	3037752562		Steven.gabriel@Victaulic.com
Pacheco Koch	Engineer	Manika Sharma	5129837972		msharma@pkce.com
Orr Construction, Inc.	General Contractor	Johnny Johnson	918-377-4362		johnny@orrconstructionok.com
Valve & Equipment Consultants	Supplier	Steven Plummer	972-922-4993		stp@valveandequipment.com
Utility Technology Services	Not Specified	David Smith	405-627-0654		dsmith@utssupply.com
Krapff-Reynolds Const. Co.	General Contractor	Fred Krapff	4056307306		fred@krapff-reynolds.com
Fortiline HDPE Fusion Group	Supplier	Allen Griffin	682-600-1145		allen.griffin@fortiline.com
Marsau Enterprises	General Contractor	chuck postier	580-541-2620		chp2620@hotmail.com
General Control Systems	SubContractor	Kenneth Nitz	5183626814		knitz@generalcontrolsystems.com
Seguin Fabricators, Misc Metals Fabricator	Supplier	Jennifer Warren	830-379-5890	830-379-0685	jennifer@seguinfab.com
Wesco Distribution Inc	Supplier	Mike Gardner	13162674387		mgardner@wescodist.com
Huxted Trenchless	SubContractor	Ray Post	9417226613		rpost@huxtedtunneling.com
Core and Main LP	Supplier	Gary Burns	817-595-0580		gary.burns@coreandmain.com
Hodges Farms and Dredging LLC	Other	Jeff Hodges	620 343 0513	620 256 0305	jeff@hodgesfd.com
Bosch Building Technologies	Manufacturer	Mike Trinklein	9186059122		mike.trinklein@us.bosch.com
shelley electric	SubContractor	Matt Jacobs	316-945-8311		mattj@shelleyelectric.com
Hicks Lightning Protection	SubContractor	Luke Mohon	9404792114		lmohon@hickslp.com
Downey Contracting, LLC	General Contractor	Dalton McCaskill	4054785277		dmccaskill@downeycontracting.com
Turnkey Mobile	SubContractor	Jeff Cooper	918.688.7142		jeff@turnkeymobile.cm
Mills Fence Services	SubContractor	Tyler Mills	9185002998		millsfenceservices@gmail.com
Tricorps	SubContractor	Houston Tracy	4056219006		houstontracy@tricorps.com
Underground Solutions	Supplier	Kyle Wroblewski	8179967267		kwroblewski@aegion.com
HME Inc	Architect	Mark Kidd	7852351524	7852353167	mkidd@hmeinc.net
City of Shawnee	Gov Agency	Seth Barkhimer	4056830626		seth.barkhimer@shawneeok.org
Omicron Controls, Inc.	Supplier	Ryan Wellman	8174209955		ryan@omicroncontrols.com
Cooper Directional Drilling	SubContractor	Mike Bailey	9187778898		Mike@CooperResourcesLLC.com
Ferguson Waterworks	Supplier	Dave Williams	9185056524		dave.williams@ferguson.com
Bill's Fence Company	SubContractor	Erin Glass	9794924877		erin@billsfence.net
Diamond Services Company	Other	Charles Woodall	4054640439		c.woodall@diamond-services.com

Kinard Painting & Sandblasting, Inc.	SubContractor	Chris Kinard	4056652324	4056652324	kinardpainting@hotmail.com
Gajeske, Inc.	Supplier	Clint Trotter	817-505-9552	972-314-8105	ctrotter@gajeske.com
Nance Precast Concrete	Manufacturer	Lee Curle	405-373-1800		quotes@npcp.net
City of Shawnee	Gov Agency	Brad Schmidt	405-273-1960		bradley.schmidt@shawneeok.org